MIAMI-DADE COUNTY
BUILDING CODE COMPLIANCE OFFICE (BCCO)
PRODUCT CONTROL DIVISION

MIAMI-DADE COUNTY, FLORIDA
METRO-DADE FLAGLER BUILDING
140 WEST FLAGLER STREET, SUITE 1603
MIAMI, FLORIDA 33130-1563
(305) 375-2901 FAX (305) 375-2908

NOTICE OF ACCEPTANCE (NOA)

Jeld-Wen, Inc.
31725 Highway 97 North
Chiloquin, OR 97624

SCOPE:

This NOA is being issued under the applicable rules and regulations governing the use of construction materials. The documentation submitted has been reviewed by Miami-Dade County Product Control Division and accepted by the Board of Rules and Appeals (BORA) to be used in Miami Dade County and other areas where allowed by the Authority Having Jurisdiction (AHJ).

This NOA shall not be valid after the expiration date stated below. The Miami-Dade County Product Control Division (In Miami Dade County) and/or the AHJ (in areas other than Miami Dade County) reserve the right to have this product or material tested for quality assurance purposes. If this product or material fails to perform in the accepted manner, the manufacturer will incur the expense of such testing and the AHJ may immediately revoke, modify, or suspend the use of such product or material within their jurisdiction. BORA reserves the right to revoke this acceptance, if it is determined by Miami-Dade County Product Control Division that this product or material fails to meet the requirements of the applicable building code.

This product is approved as described herein, and has been designed to comply with the Florida Building Code, including the High Velocity Hurricane Zone.

DESCRIPTION: The **Jeld-Wen** Series **"Premium"Single Outswing Glazed Wood Door w/wo Sidelites & w/wo Surface bolts**

APPROVAL DOCUMENT: Drawing No. **S-2034**, titled "Premium Wood Doors," sheets 1 through 9 of 9, prepared by manufacture dated 07/21/00 and last revised on 02/10/05, signed & sealed by James Dobrowski, P. E. bearing the Miami-Dade County Product Control Revision stamp with the Notice of Acceptance number and expiration date by the Miami-Dade County Product Control Division.

MISSILE IMPACT RATING: None: Approved Hurricane Protection devices, complying with FBC, as applicable, are required.

LABELING: Each unit shall bear a permanent label with the manufacturer's name or logo, city, state and following statement: "Miami-Dade County Product Control Approved", unless otherwise noted herein.

RENEWAL of this NOA shall be considered after a renewal application has been filed and there has been no change in the applicable building code negatively affecting the performance of this product.

TERMINATION of this NOA will occur after the expiration date or if there has been a revision or change in the materials, use, and/or manufacture of the product or process. Misuse of this NOA as an endorsement of any product, for sales, advertising or any other purposes shall automatically terminate this NOA. Failure to comply with any section of this NOA shall be cause for termination and removal of NOA.

ADVERTISEMENT: The NOA number preceded by the words Miami-Dade County, Florida, and followed by the expiration date may be displayed in advertising literature. If any portion of the NOA is displayed, then it shall be done in its entirety.

INSPECTION: A copy of this entire NOA shall be provided to the user by the manufacturer or its distributors and shall be available for inspection at the job site at the request of the Building Official.

This NOA **renews and revises NOA # 02-0722.08** and, consists of this page 1 and evidence pages E-1and E-2, as well as approval document mentioned above.
The submitted documentation was reviewed by **Ishaq I. Chanda, P. E.**

PRODUCT CONTROL ACCEPTED
2/18/5

Jeld-Wen, Inc.

NOTICE OF ACCEPTANCE: EVIDENCE SUBMITTED

A. DRAWINGS

1. Manufacturer's die drawings and sections.
2. Drawing No. **S-2034**, titled "Premium Wood Doors," sheets 1 through 9 of 9, prepared by manufacture dated 07/21/00 and last revised on 02/10/05, signed & sealed by James Dobrowski, P. E.

B. TESTS (Test reports transferred from file # **02-0722.08**), Test conducted per SFBC, PA202-94, now termed as FBC, TAS 202-94

1. Test reports on 1) Air Infiltration Test, per SFBC, PA 202-94
   2) Uniform Static Air Pressure Test, Loading per SFBC, PA 202-94
   3) Water Resistance Test, per SFBC, PA 202-94
   4) Forced Entry Test, per SFBC, PA 202-94

   along with marked-up drawings and installation diagram of single glazed outswing wood doors with sidelites, prepared by Certified Testing Laboratories, Test Report No. **CTLA572W**, and **572WB** dated July 10-11,2000 and August 10, 2000 respectively and both **revised** on May 17th, 2001, signed and sealed by Ramesh Patel, P.E.
2. Additional test report No CTLA 701W for muntin qualification dated June 08, 2001, signed and sealed by Ramesh Patel, P.E.

C. CALCULATIONS (calcs transferred from file # **02-0722.08**)

1. Wood strength referenced properties data from, "Wood Handbook" and table prepared by manufacturer
2. Anchor verification calculations, dated 8-24-00, prepared, signed and sealed by Mark Fetherman, P.E.

D. QUALITY ASSURANCE

1. Miami Dade Building Code Compliance Office (BCCO).

E. MATERIAL CERTIFICATIONS

1. None

F. STATEMENTS (letters transferred from file # **02-0722.08**)

1. Statement letter of conformance and "No financial interest" dated January 11, 2005, signed and sealed by James Dobrowski, P.E.
2. Letter dated October 14, 2004, issued by Jeld-Wen requesting for revision & renewal, signed by Steve Strawn.
3. Statement letter of no financial interest, dated October 18, 2004, signed by Steve Strawn, Jeld-Wen, Inc.

Ishaq I. Chanda

Ishaq I. Chanda, P. E.
Product Control Examiner
NOA No 04-1025.07
Expiration Date: September 27, 2010
Approval Date: March 10, 2005

NOTICE OF ACCEPTANCE: EVIDENCE SUBMITTED

F. STATEMENTS: Continue (letters transferred from file # **02-0722.08**)

4. Statement letter of conformance and "No financial interest" dated July 24, 2000, signed and sealed by Mark C. Fetherman, P.E.
5. Statement letter of compliance, as part of test reports No. **CTLA572W**, and **572WB** dated July 10-11, 2000 and August 10, 2000 respectively, issued by Certified Testing Laboratories, signed and sealed by Ramesh Patel, P.E.
6. Letter of explanation dated May 22, 2001, issued by Certified Testing Laboratories for test reports CTLA-570 W, CTLA-570 WB, CTLA-570 WC and CTLA-572 WA, signed by Jim Blakely.
7. Letter of explanation dated May 23, 2001, issued by Ramesh Patel, P. E., witnessing engineer Certified Testing Laboratories for test reports CTLA-570 W, CTLA-570 WB, CTLA-570 WC and CTLA-572 WA, signed and sealed by Ramesh Patel, P. E.
8. Letter of clarification for laboratory data, issued by Certified Testing Laboratories , signed by Christopher Benett (Lab Manager) for test reports CTLA-570 W, CTLA-570 WB, CTLA-570 WC and CTLA-572 WA, signed & sealed by Ramesh Patel, P. E. (witnessing engineer)
9. Addendum letter dated July 17, 2001 and August 02, 2001, issued by Certified Testing laboratory, Ramesh Patel, P. E. (witnessing engineer).

G. OTHER

1. This NOA **renews & revises # 02-0722.08.**
2. Jeld-Wen proposal letter dated May 09, 2002 and BCCO response dated 05-18-02.
3. Revised test reports CTLA-570 W, CTLA 570WA, CTLA-570 WB, CTLA-570 WC and CTLA-572 WA, issued by Certified Testing Laboratories, signed and sealed by Ramesh Patel, P. E.
4. Faxed Laboratory Worksheet data, dated July 05, 2001 supplied by the Certified Testing Laboratories and Lab notes provided through manufacturer, for test reports CTLA-570 W, CTLA-570 WA, CTLA-570 WB CTLA-570 WC and CTLA-572 WA.
5. Various letter of explanations and addendum letter referenced above.
6. Manufacturing plant address of Jeld-Wen series "Premium".
7. Glazing complies w/ASTM E-1300-98
8. The other NOA(s) related to this file are 00-0926.02 & 02-0722.08.

Ishaq I. Chanda

Ishaq I. Chanda, P. E.
Product Control Examiner
NOA No 04-1025.07
Expiration Date: September 27, 2010
Approval Date: March 10, 2005

JELD-WEN®

PREMIUM WOOD DOORS
6-8 AND 8-0 GLAZED OUTSWING
SINGLE DOOR W/ AND W/O SIDELITES

GENERAL NOTES

1. THIS PRODUCT IS DESIGNED TO MEET THE FLORIDA BUILDING CODE 2001 INCLUDING "HVHZ". INSTALLATION OF THIS SYSTEM IN "HVHZ" AREAS REQUIRES THE USE OF APPROVED SHUTTER/EXTERNAL PROTECTION DEVICE, COMPLYING WITH "HVHZ" REQUIREMENTS. INSTALLATION OF THIS SYSTEM OUTSIDE THE "HVHZ" AREAS SHALL MEET THE APPLICABLE CODE REQUIREMENT FOR WINDBORNE DEBRIS PROTECTION.
2. WOOD BUCKS BY OTHERS, MUST BE ANCHORED PROPERLY TO TRANSFER LOADS TO THE STRUCTURE.
3. PRODUCT ANCHORS SHALL BE AS LISTED AND SPACED AS PER DETAILS. ANCHOR EMBEDMENT TO BASE MATERIAL SHALL BE BEYOND WALL DRESSING OR STUCCO.
4. FOR DESIGNED PRESSURE RATING SEE TABLE 1, PAGE 1.
5. SIDELITES ARE AN OPTION AND CAN BE A SINGLE OR DOUBLE CONFIGURATION.

Frame Construction: The head and side jambs are finger jointed ponderosa pine measuring 4.5625" X 1.25". The head and side jambs are mortised, butted and joined using (3) 16GA. 2" X 1/2" crown staples at the top corners. The bump threshold is attached to the floor.

Door Panel Construction: The panel is a stile and rail construction. The stiles and rails are constructed from solid wood of either Douglas Fir or Western Hemlock. They are laminated with a .0625" thk. wood veneer of the following species: (See BOM Item #1 for species). The veneer face sheet is glued to the stiles and rails. The top rail is connected to the perimeter stiles w/ (2) 1/2" dia. x 4" long wooden dowels and the bottom rail is connected to the perimeter stile w/ (3) 1/2" dia. x 4" long wooden dowels. The glazing is captured between the wood cap on the exterior and the wood glass stop on the interior. The panels are wet glazed using PRC 365 silicone.

Sidelite Construction: Panel is a stile and rail construction same as the door panel. The glazing is captured between the wood cap on the exterior and the wood glass stop on the interior. The panels are wet glazed using PRC 365 silicone.

TABLE OF CONTENTS

SHEET #	DESCRIPTION
1	COMMON (GENERAL NOTES, TYPICAL ELEVATION)
2	VERTICAL CROSS SECTIONS
3	HORIZONTAL CROSS SECTIONS 1/3, 2/3, 3/3 & 4/3
4	HORIZONTAL CROSS SECTIONS 1/4, 2/4 & 3/4
5	ANCHORING LOCATIONS, SINGLE W/(2) SL & DETAILS
6	ANCHORING LOCATIONS SINGLE & SINGLE W/(1) SL
7	GLAZING DETAILS & RAIL DETAILS
8	FRAME COMPONENTS & B.O.M.
9	DOOR MODELS

ALL MODELS ARE VIEWED FROM THE INTERIOR.

THE SURFACE BOLTS ARE AN OPTION USED TO ACHIEVE A HIGHER DESIGN PRESSURE RATING. SEE SHEET 2, 3 AND SHEET 4 FOR SURFACE BOLT OPTIONS.

ANCHOR & MULLION ATTACHMENT SPACING FOR 6-8 DOORS, SEE SHEET 5 OF 9

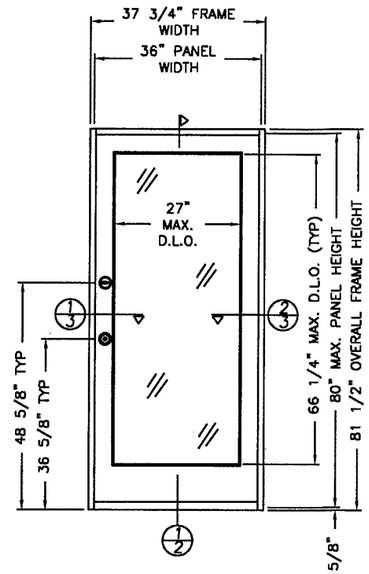

6-8 OUTSWING SINGLE ELEVATION

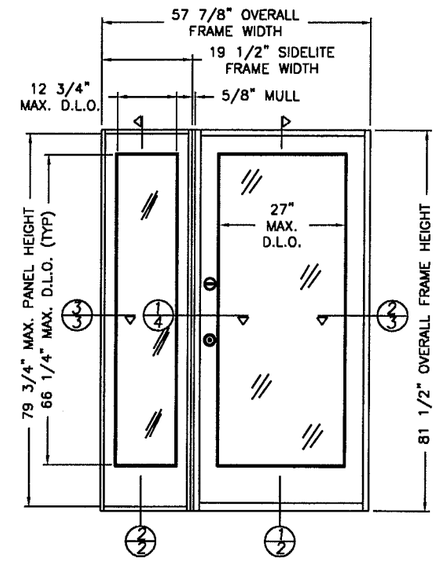

6-8 OUTSWING SINGLE W/(1) SIDELITE ELEVATION

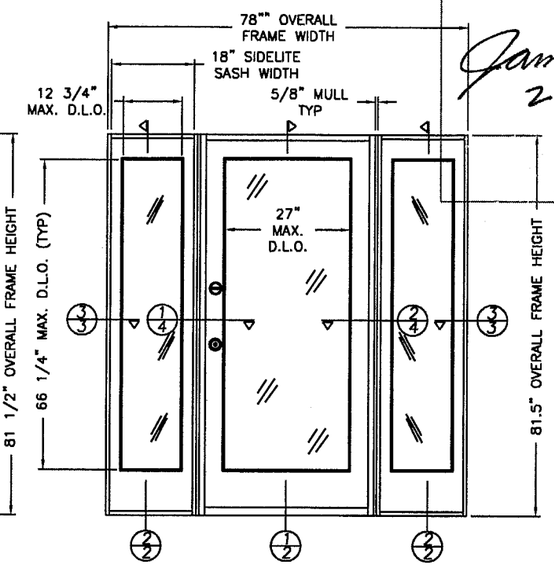

6-8 OUTSWING SINGLE W/(2) SIDELITES ELEVATION

ANCHOR & MULLION ATTACHMENT SPACING FOR 8-0 DOORS, SEE SHEET 6 OF 9

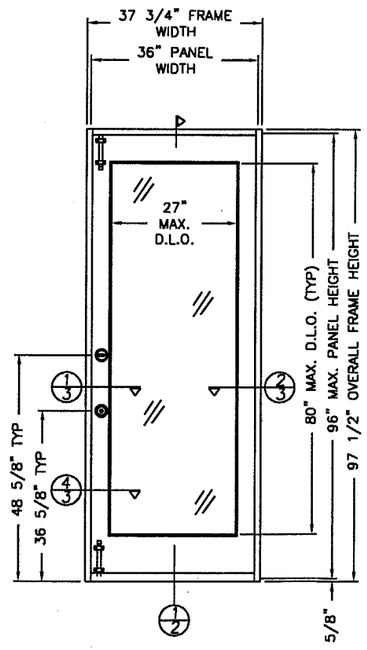

8-0 OUTSWING SINGLE ELEVATION

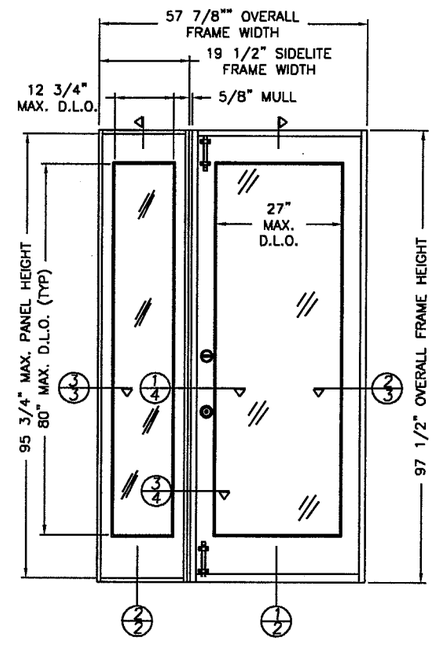

8-0 OUTSWING SINGLE W/(1) SIDELITE ELEVATION

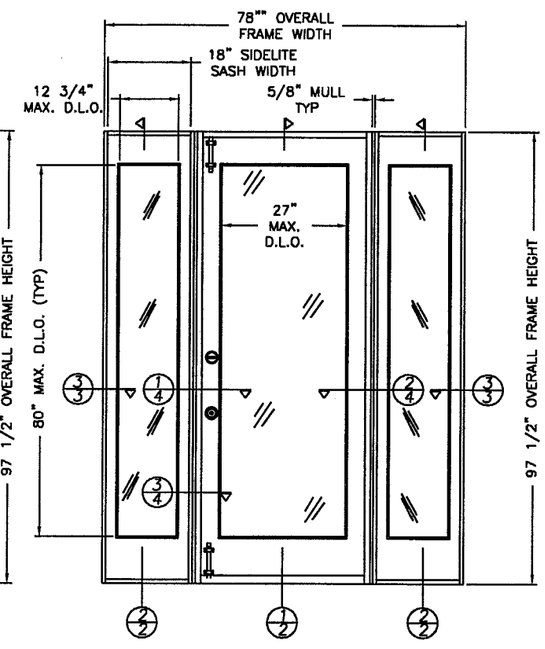

8-0 OUTSWING SINGLE W/(2) SIDELITES ELEVATION

DESIGN PRESSURE RATING (OUTSWING DOORS)

	WHERE WATER INFILTRATION REQUIREMENT IS NEEDED	
6-8 MODELS W/OUT BOLTS	+55.0 psf	-55.0 psf
8-0 MODELS W/OUT BOLTS	+47.0 psf	-47.0 psf
8-0 MODELS W/BOLTS	+60.0 psf	-60.0 psf

PRODUCT REVISED
as complying with the Florida Building Code
Acceptance No 04-1025.07
Expiration Date SEPTEMBER 27, 2010
By Ishaq I. Chand
Miami Dade Product Control Division

James Dobrowski 2-10-05

JELD-WEN, INC.
31725 HIGHWAY 97 N.
CHILOQUIN, OR. 97624
PH. 541.783.2057

PRODUCT: WOOD STILE & RAIL DOOR 6-8 & 8-0 GLAZED OUTSWING SINGLE W/ & W/O SIDELITES

PART OR ASSEMBLY: ELEVATIONS & GENERAL NOTES

NO.	DATE	REVISIONS	BY
4	1-03-05	GENERAL REVISIONS	WAR
3	06/27/02	GENERAL REVISION	KMN
2	08/23/01	GENERAL REVISION	TJH
1	04/06/01	GENERAL REVISION	TJH

DATE: 7-21-00
SCALE: 1 : 32
DWG. BY: TJH
CHK. BY: RW
DRAWING NO.: S-2034
SHEET 1 OF 9

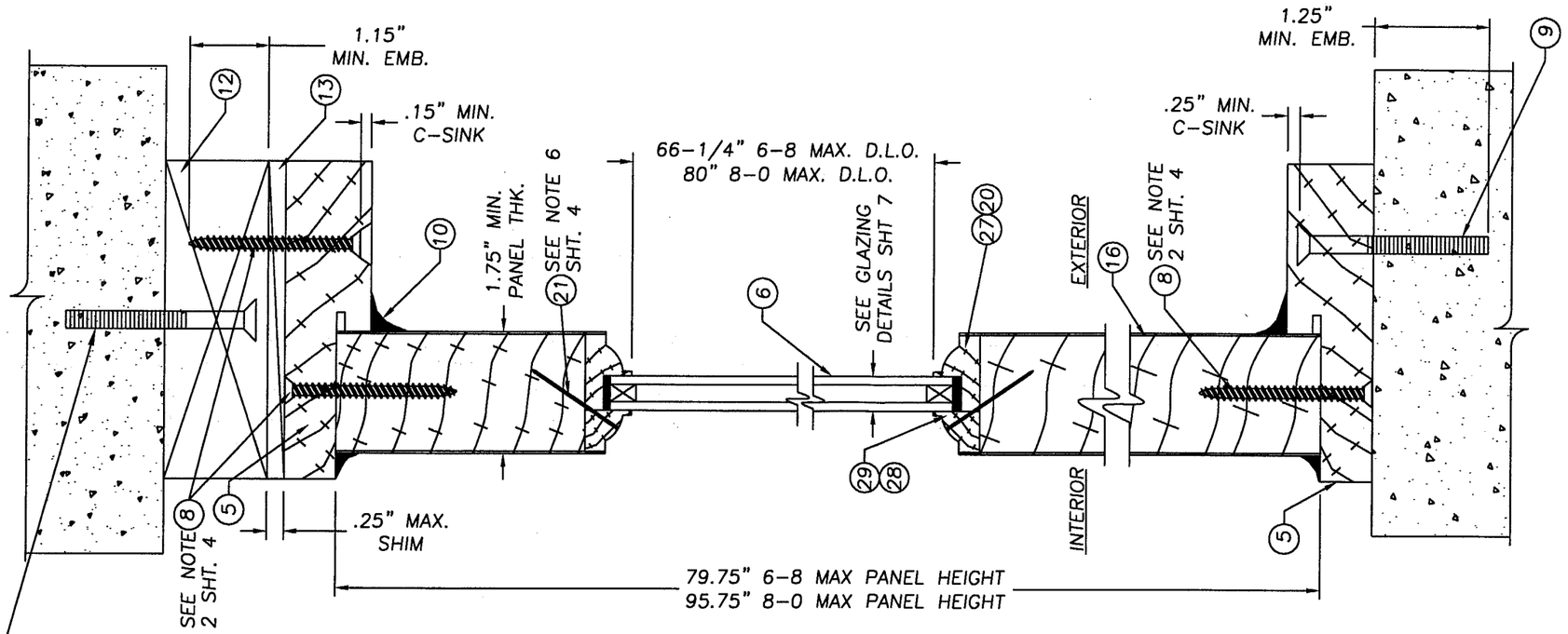

2/2 VERTICAL CROSS SECTION

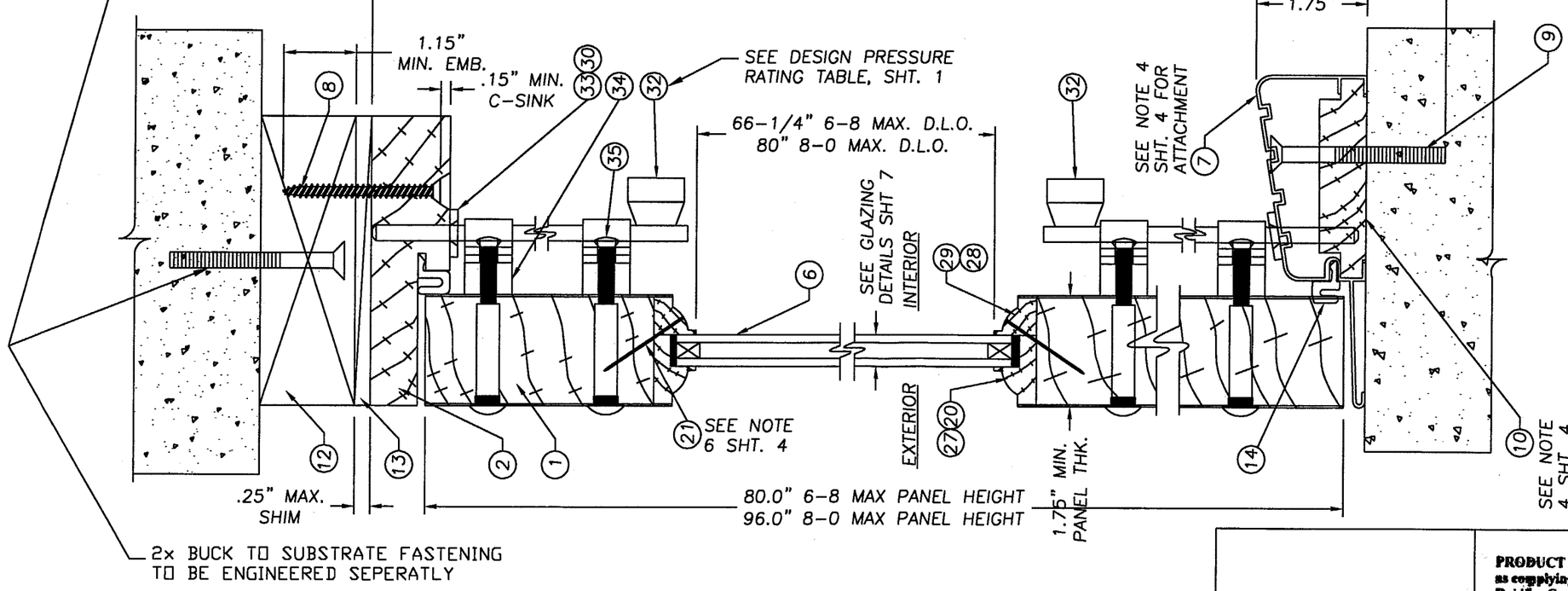

1/2 VERTICAL CROSS SECTION

James Dobrowski
2-10-05

JELD-WEN, INC.
31725 HIGHWAY 97 N.
CHILOQUIN, OR. 97624
PH. 541.783.2057

PRODUCT: WOOD STILE & RAIL DOOR 6-8 & 8-0 GLAZED OUTSWING SINGLE W/ & W/O SIDELITES

PART OR ASSEMBLY: VERTICAL CROSS SECTIONS

NO.	DATE	REVISIONS	BY
4	2-04-05	GENERAL REVISIONS	WAR
3	06/27/02	GENERAL REVISION	KMN
2	08/23/01	GENERAL REVISION	TJH
1	04/06/01	GENERAL REVISION	TJH

PRODUCT REVISED
as complying with the Florida Building Code
Acceptance No 04-1025.07
Expiration Date SEP 27, 2010
By Ishay I. Chanda
Miami Dade Product Control Division

DATE: 7-21-00
SCALE: 1 : 2
DWG. BY: TJH
CHK. BY: RW
DRAWING NO.: S-2034
SHEET 2 OF 9

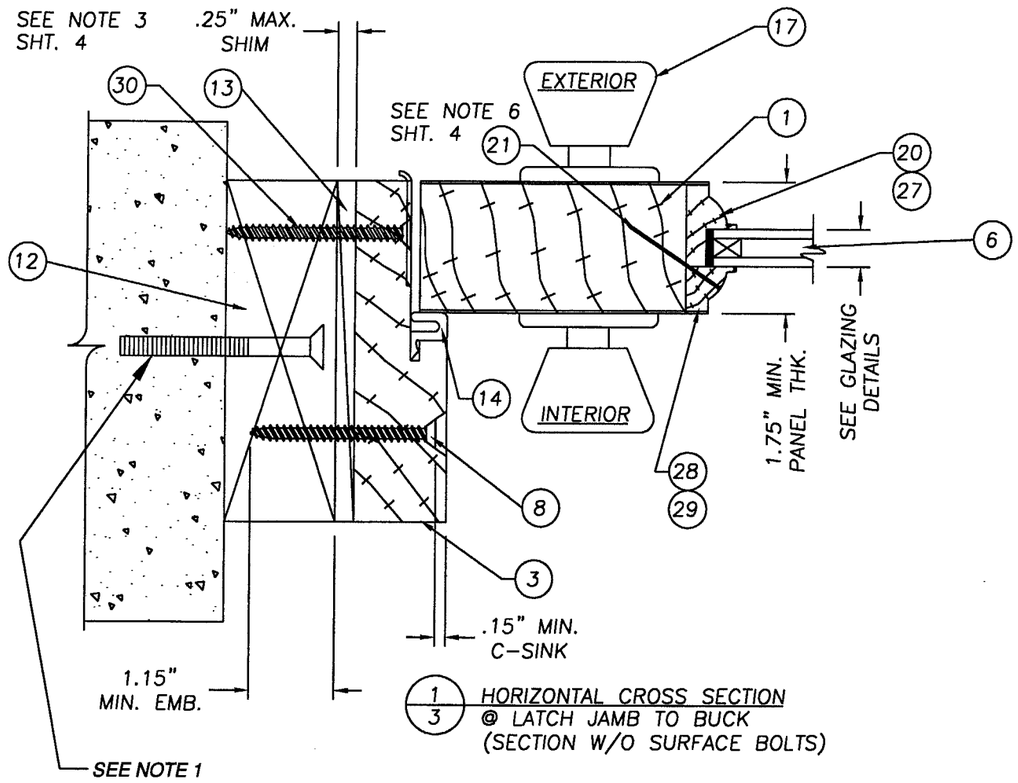

1/3 HORIZONTAL CROSS SECTION @ LATCH JAMB TO BUCK (SECTION W/O SURFACE BOLTS)

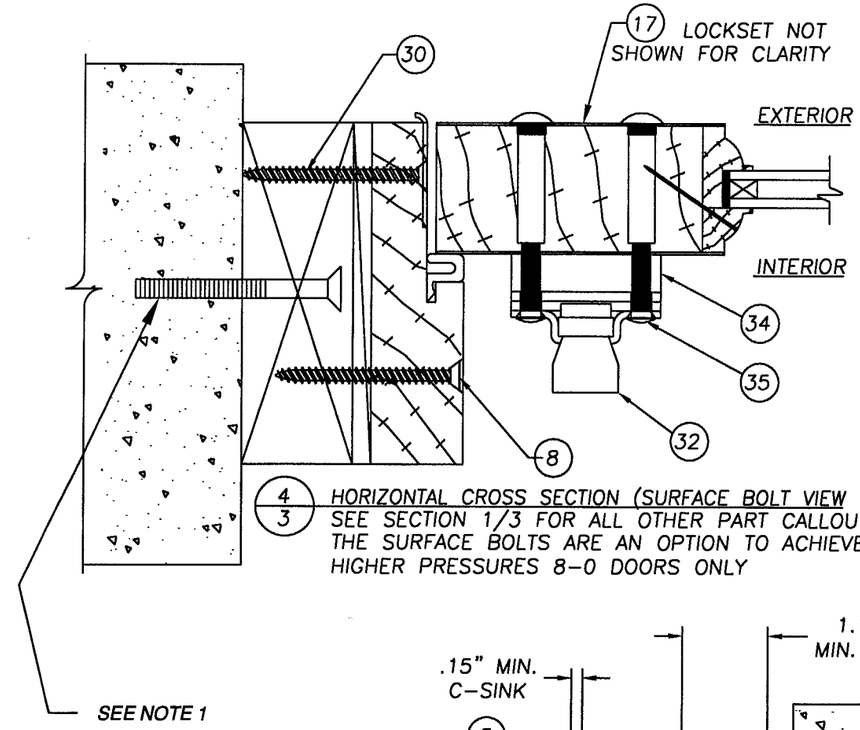

4/3 HORIZONTAL CROSS SECTION (SURFACE BOLT VIEW SEE SECTION 1/3 FOR ALL OTHER PART CALLOUTS) THE SURFACE BOLTS ARE AN OPTION TO ACHIEVE HIGHER PRESSURES 8-0 DOORS ONLY

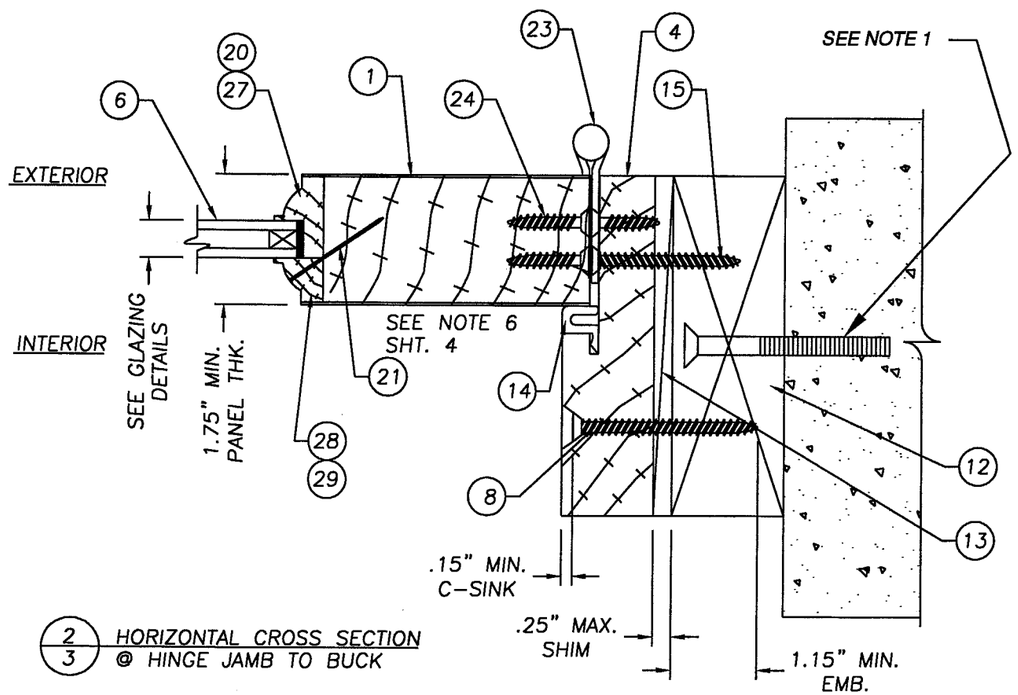

2/3 HORIZONTAL CROSS SECTION @ HINGE JAMB TO BUCK

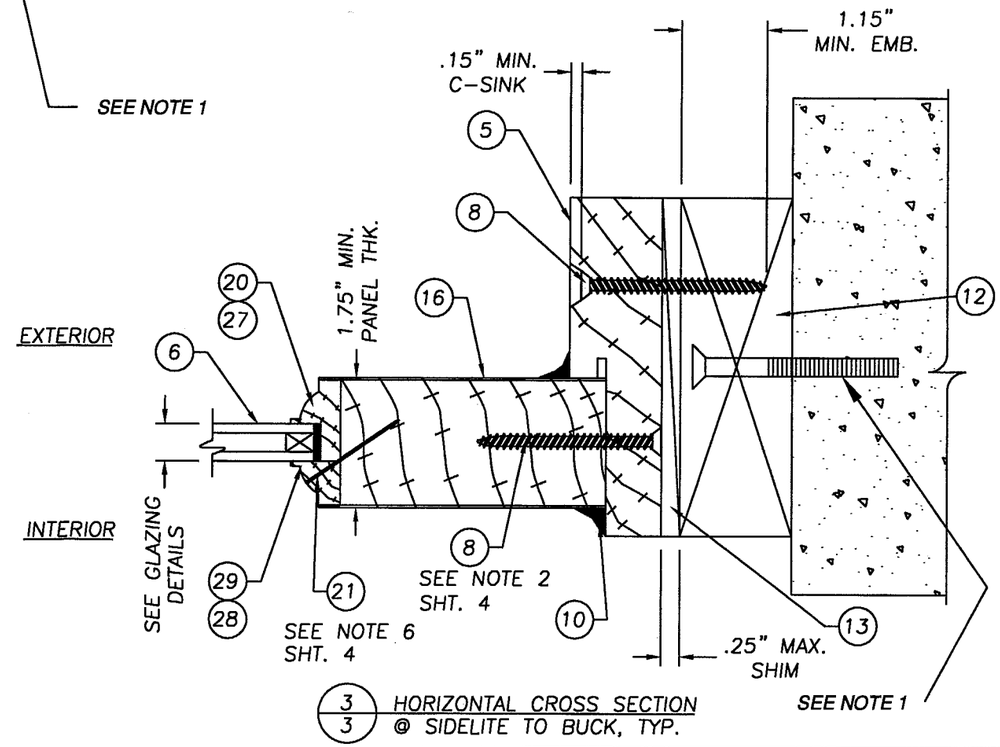

3/3 HORIZONTAL CROSS SECTION @ SIDELITE TO BUCK, TYP.

NOTE 1
2x BUCK TO SUBSTRATE FASTENING TO BE ENGINEERED SEPERATLY

PRODUCT REVISED
as complying with the Florida Building Code
Acceptance No 04-1025.07
Expiration Date SEP 23 2010
By Ishaq I. Chanda
Miami Dade Product Control Division

James Dobrowski
2-10-05

JELD-WEN, INC.
31725 HIGHWAY 97 N.
CHILOQUIN, OR. 97624
PH. 541.783.2057

PRODUCT: WOOD STILE & RAIL DOOR 6-8 & 8-0 GLAZED OUTSWING SINGLE W/ & W/O SIDELITES

PART OR ASSEMBLY: HORIZONTAL CROSS SECTIONS 1/3, 2/3, 3/3 & 4/3

NO.	DATE	REVISIONS	BY
3	2-04-05	GENERAL REVISIONS	WAR
2	08/23/01	GENERAL REVISION	TJH
1	04/06/01	GENERAL REVISION	TJH

DATE: 7-21-00
SCALE: 1 : 2
DWG. BY: TJH
CHK. BY: RW
DRAWING NO.: S-2034
SHEET 3 OF 9

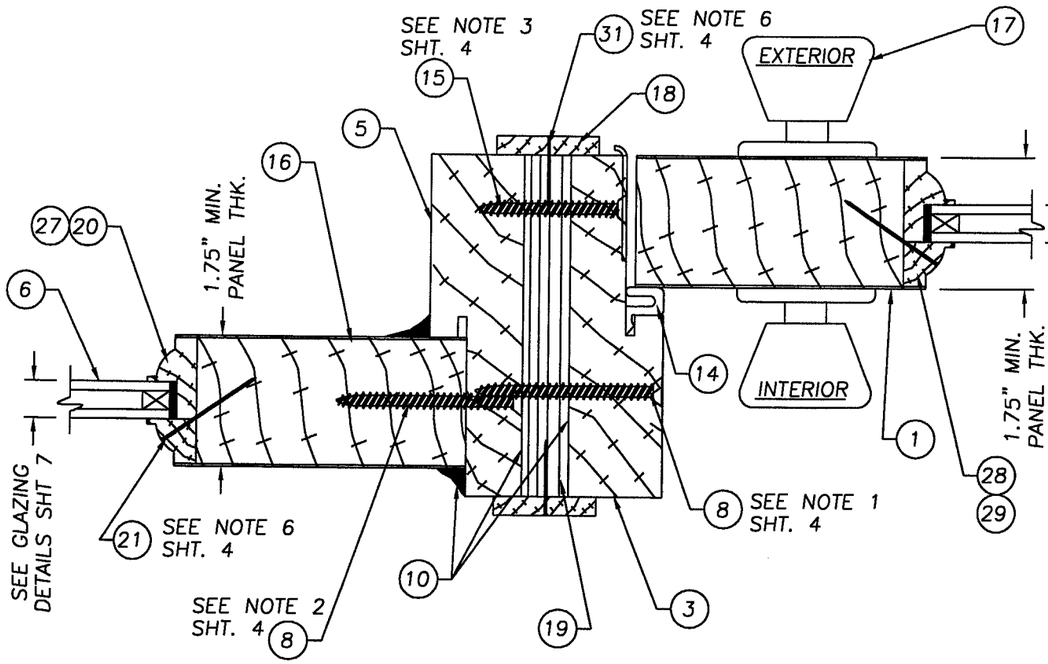

1/4 HORIZONTAL CROSS SECTION
@ LATCH JAMB TO SIDELITE
(SECTION W/O SURFACE BOLTS)

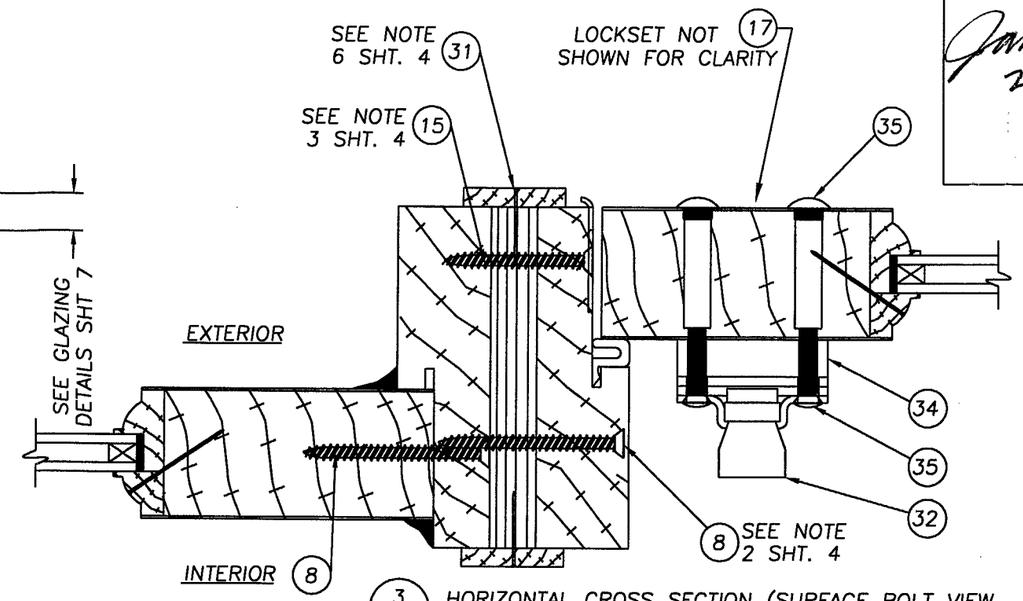

3/4 HORIZONTAL CROSS SECTION (SURFACE BOLT VIEW
SEE SECTION 1/4 FOR ALL OTHER PART CALLOUTS)
THE SURFACE BOLTS ARE AN OPTION TO ACHIEVE
HIGHER PRESSURES 8-0 DOORS ONLY

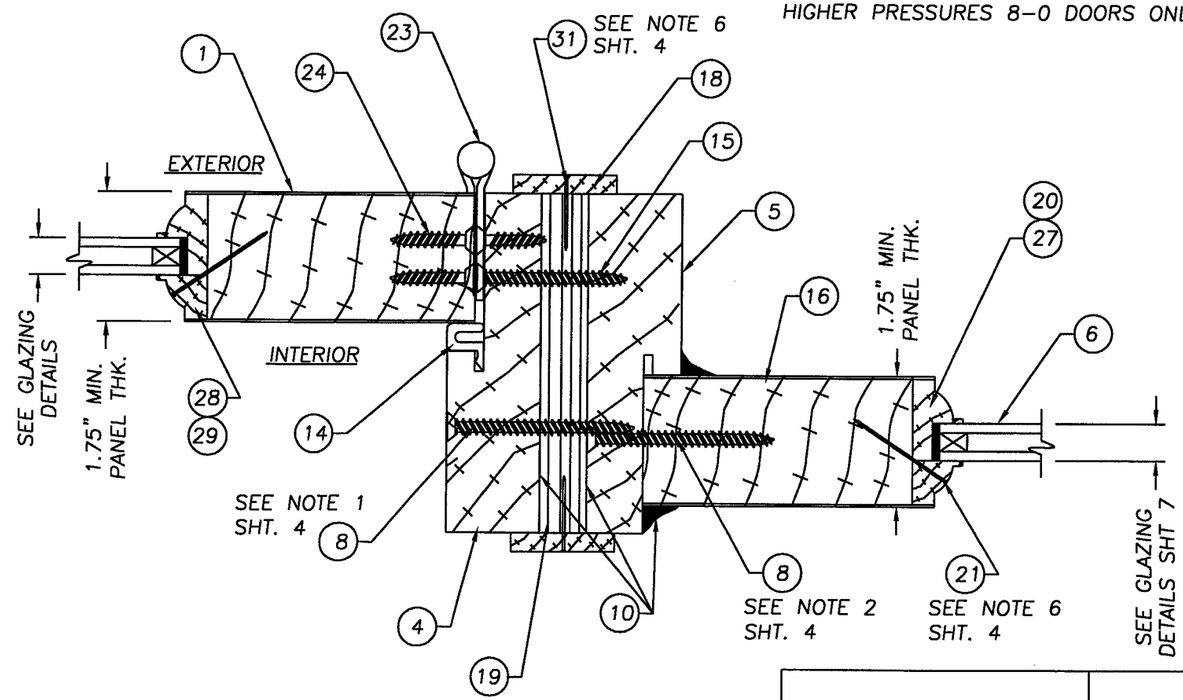

2/4 HORIZONTAL CROSS SECTION
@ HINGE JAMB TO SIDELITE

NOTES: (TYP. TO ALL FRAME CONFIGURATIONS)

1. SPACING FOR ITEM #8 AT THE MULLION AS FOLLOWS:
   8-0 UNITS: 6" DOWN FROM TOP & (6) MORE AT @ 14.375" O.C.
   6-8 UNITS: SAME AS THE PERIMETER SPACING FOR THE 6-8 UNITS.
2. SIDELITE TO FRAME ATTACHMENT SPACING FOR ITEM #8: 6" FROM TOP AND BOTTOM CORNERS AND (2) MORE EVENLY SPACED FOR (4) TOTAL PER OCCURANCE.
3. WHEN ATTACHING STRIKE & DEADBOLT PLATES TO JAMB: ON SINGLE UNITS USE ITEM 30 (#10 x 2 1/2"). ON SINGLE UNITS W/SIDELITES ITEM 15 (#10 x 2").
4. THE THRESHOLD IS NOT ATTACHED TO THE FRAME, IT IS NOTCHED AND ATTACHED TO THE FLOOR WITH ITEMS #9 (1/4" x 2 3/4") TAPCON AND #10 (CR LAWRENCE 33S SILICONE CAULK). APPLY A CONTINUOS BEAD .125" THK. x .375" W. AROUND ALL (4) OUTER EDGES WITH A MINIMUM OF (2) ROWS IN A ZIG ZAG PATTERN IN THE MIDDLE THE ENTIRE LENGTH OF THE THRESHOLD, .125" THK. x .375" W.
5. THE TOP CORNERS OF THE DOOR FRAME, AND ALL FOUR CORNERS OF THE SIDELITE FRAME ARE STAPLED TOGETHER USING (3) 16GA. x 2" LG. x 1/2" CROWN STAPLES.
6. SPACING FOR ITEM #21 & #31 IS A MAX. OF 8" O.C.

PRODUCT REVISED
as complying with the Florida Building Code
Acceptance No. 04-1025.07
Expiration Date SEP 27, 2010
By Ishan J. Chanda
Miami Dade Product Control Division

James Dobrowski
2-10-05

JELD-WEN, INC.
31725 HIGHWAY 97 N.
CHILOQUIN, OR. 97624
PH. 541.783.2057

PRODUCT: WOOD STILE & RAIL DOOR 6-8 & 8-0 GLAZED OUTSWING SINGLE W/ & W/O SIDELITES

PART OR ASSEMBLY: HORIZONTAL CROSS SECTIONS 1/4, 2/4, & 3/4

NO.	DATE	REVISIONS	BY
3	2-04-05	GENERAL REVISIONS	WAR
2	08/23/01	GENERAL REVISION	TJH
1	04/06/01	GENERAL REVISION	TJH

DATE: 7-21-00
SCALE: 1 : 2
DWG. BY: TJH
CHK. BY: RW
DRAWING NO.: S-2034
SHEET 4 OF 9