MIAMI-DADE

BUILDING CODE COMPLIANCE OFFICE (BCCO)
PRODUCT CONTROL DIVISION

MIAMI-DADE COUNTY, FLORIDA
METRO-DADE FLAGLER BUILDING
140 WEST FLAGLER STREET, SUITE 1603
MIAMI, FLORIDA 33130-1563
(305) 375-2901 FAX (305) 375-2908

NOTICE OF ACCEPTANCE (NOA)

Smith Mountain Impact Systems
11520 SW 120 Street
Miami, FL 33186

SCOPE:

This NOA is being issued under the applicable rules and regulations governing the use of construction materials. The documentation submitted has been reviewed by Miami-Dade County Product Control Division and accepted by the Board of Rules and Appeals (BORA) to be used in Miami Dade County and other areas where allowed by the Authority Having Jurisdiction (AHJ).

This NOA shall not be valid after the expiration date stated below. The Miami-Dade County Product Control Division (In Miami Dade County) and/or the AHJ (in areas other than Miami Dade County) reserve the right to have this product or material tested for quality assurance purposes. If this product or material fails to perform in the accepted manner, the manufacturer will incur the expense of such testing and the AHJ may immediately revoke, modify, or suspend the use of such product or material within their jurisdiction. BORA reserves the right to revoke this acceptance, if it is determined by Miami-Dade County Product Control Division that this product or material fails to meet the requirements of the applicable building code.

This product is approved as described herein, and has been designed to comply with the Florida Building Code, including the High Velocity Hurricane Zone.

DESCRIPTION: Series MK-2 Aluminum Entrance Door with Transom-L.M.I

APPROVAL DOCUMENT: Drawing No. **W03-58**, titled "Series MK-2 Alum Entrance Door (L.M.I)", sheets 1 through 10 of 10, prepared by the AL-Farooq Corporation, dated 07/30/03 with revision **"B"** on 02/13/04, signed and sealed by Humayoun Farooq, P.E., bearing the Miami-Dade County Product Control Revision stamp with the Notice of Acceptance number and expiration date by the Miami-Dade County Product Control Division.

MISSILE IMPACT RATING: Large and Small Missile Impact

LABELING: Each unit shall bear a permanent label with the manufacturer's name or logo, city, state and following statement: "Miami-Dade County Product Control Approved", unless otherwise noted herein.

RENEWAL of this NOA shall be considered after a renewal application has been filed and there has been no change in the applicable building code negatively affecting the performance of this product.

TERMINATION of this NOA will occur after the expiration date or if there has been a revision or change in the materials, use, and/or manufacture of the product or process. Misuse of this NOA as an endorsement of any product, for sales, advertising or any other purposes shall automatically terminate this NOA. Failure to comply with any section of this NOA shall be cause for termination and removal of NOA.

ADVERTISEMENT: The NOA number preceded by the words Miami-Dade County, Florida, and followed by the expiration date may be displayed in advertising literature. If any portion of the NOA is displayed, then it shall be done in its entirety.

INSPECTION: A copy of this entire NOA shall be provided to the user by the manufacturer or its distributors and shall be available for inspection at the job site at the request of the Building Official.

This NOA **revises NOA # 03-0925.03** and, consists of this page 1 and evidence page E-1, and E-2, as well as approval document mentioned above.

The submitted documentation was reviewed by **Herminio F. Gonzalez, P.E., Director, BCCO**

PRODUCT CONTROL ACCEPTED 1/12/2005

NOTICE OF ACCEPTANCE: EVIDENCE SUBMITTED

E. MATERIAL CERTIFICATIONS

1. Notice of Acceptance No. **01-0205.02** issued to Solutia, Inc. for Saflex/Keepsafe" dated 5/17/01, expiring on 5/21/06.
2. Notice of Acceptance No. **03-1223.04** issued to Surface Specialties, Inc. for "Uvekol-Liq Resin" dated 02/05/04, expiring on 02/08/09.

F. STATEMENTS

1. Statement letter of code compliance, dated February 23, 2004 signed and sealed by Humayoun Farooq, P.E.
2. Statement letter of no financial interest, dated February 23, 2004 signed and sealed by Humayoun Farooq, P.E.

G. OTHER

1. Letter from consultant stating that the product is in compliance with the Florida Building Code (FBC).
2. Notice of Acceptance No. **03-0925.03** Smith Mountain Impact Systems, "Series MK-2 Alum. Entrance Door -L.M.I.", approved on 12/04/03 and expiring on 12/04/08.

for M Thatti

Herminio F. Gonzalez, P.E.
Director, Building Code Compliance Office
NOA No 04-1029.03
Expiration Date: December 04, 2008
Approval Date: February 03, 2005

Smith Mountain Impact Systems

NOTICE OF ACCEPTANCE: EVIDENCE SUBMITTED

A. DRAWINGS

1. Manufacturer's die drawings and sections.
2. Drawing No. **W03-58**, titled "Series MK-2 Alum Entrance Door- L.M.I.", sheets 1 through 10 of 10, prepared by the AL-Farooq Corporation, dated 07/30/03 with revision **"B"** on 02/13/04, signed and sealed by Humayoun Farooq, P.E.

B. TESTS

1. Test reports on 1) Uniform Static Air Pressure Test, per FBC, TAS 202-94
2) Large Missile Impact Test per FBC, TAS 201-94
3) Cyclic Wind Pressure Loading per FBC, TAS 203-94
along with marked-up drawings and installation diagram of aluminum outswinging entrance door, prepared by Fenestration Testing Laboratory, Inc., Test Reports No. **FTL-3997,** dated 12/04/03 signed and sealed by Edmundo Largaespada, P. E.

2. Test reports on 1) Air Infiltration Test, per FBC, TAS 202-94
2) Uniform Static Air Pressure Test, Loading per FBC TAS 202-94
3) Water Resistance Test, per FBC, TAS 202-94
4) Large Missile Impact Test per FBC, TAS 201-94
5) Cyclic Wind Pressure Loading per FBC, TAS 203-94
6) Forced Entry Test, Per FBC 2411 3.2.1 and TAS 202-94
along with marked-up drawings and installation diagram of a aluminum outswinging entrance door, prepared by Fenestration Testing Laboratory, Inc., Test Report No. **FTL-3603**, dated 11/05/02, signed and sealed by Joseph Chan, P.E.
"Submitted under NOA # 03-0925.03"

C. CALCULATIONS

1. Anchor Calculations, ASTM- E 1300, and structural analysis, prepared by AL-Farooq Corporation, dated 02/23/04, signed and sealed by Humayoun Farooq, P.E.

2. Complies with ASTM-E1300-98

3. Anchor Calculations and structural analysis, prepared by AL-Farooq Corporation, dated 08/15/03, signed and sealed by Humayoun Farooq, P.E.
"Submitted under NOA # 03-0925.03"

D. QUALITY ASSURANCE

1. Miami Dade /Building Code Compliance Office (BCCO).

for

Herminio F. Gonzalez, P.E.
Director, Building Code Compliance Office
NOA No 04-1029.03
Expiration Date: December 04, 2008
Approval Date: February 03, 2005

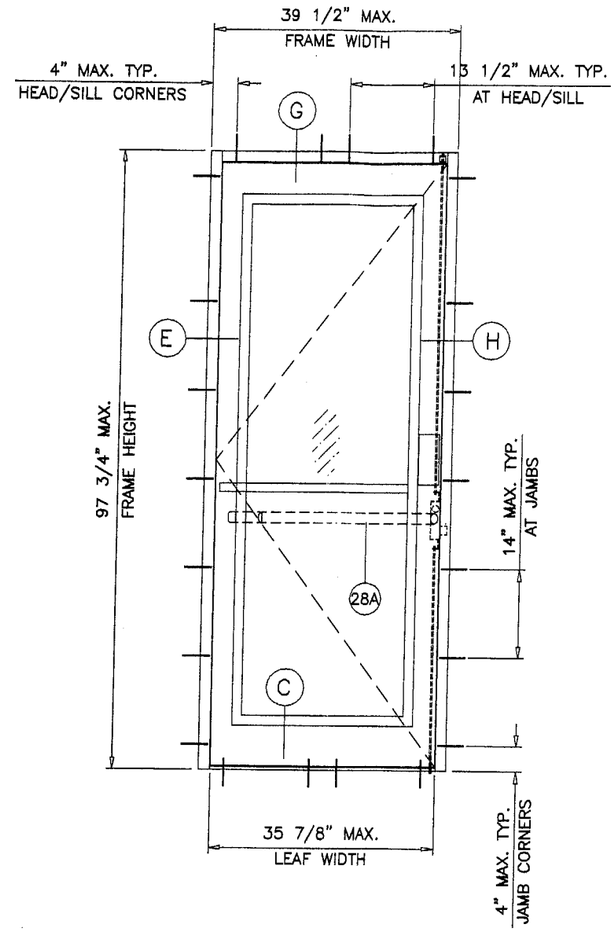

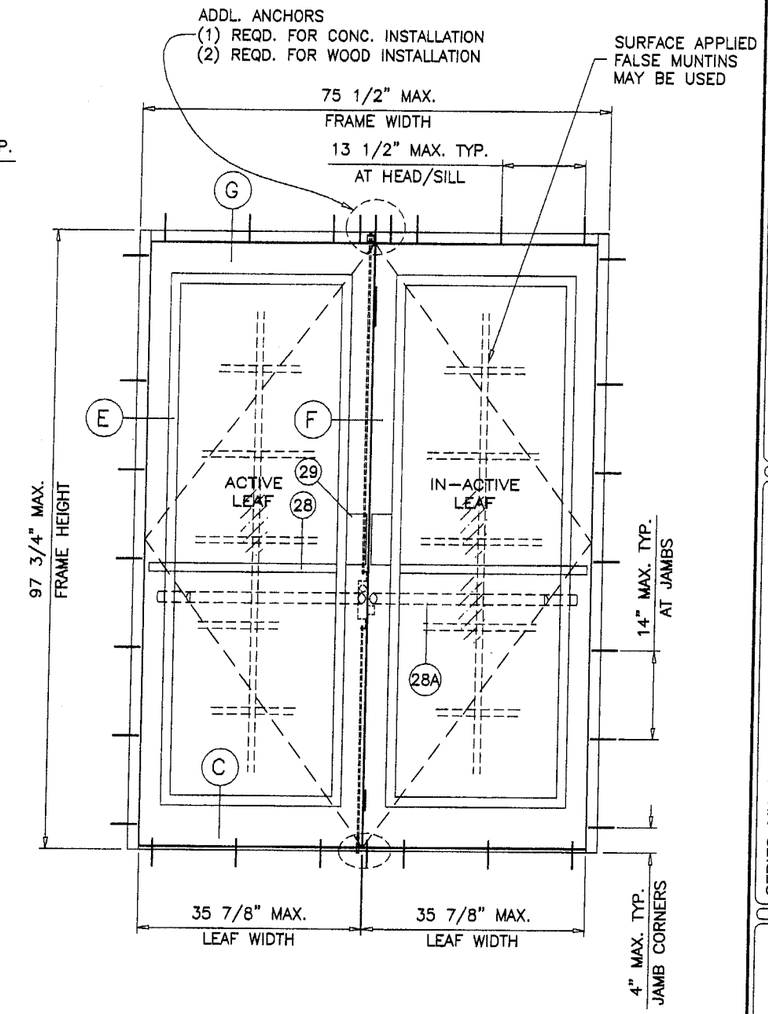

MAXIMUM DESIGN LOAD RATING = + 90.0 PSF
(FOR SIZES SHOWN ABOVE OR SMALLER) − 90.0 PSF

SERIES MK-2 ALUMINUM ENTRANCE DOOR

THIS PRODUCT IS RATED FOR LARGE MISSILE IMPACT. SHUTTERS ARE NOT REQUIRED.

APPROVAL APPLIES TO SINGLE (X) AND DOUBLE (XX) LEAF DOORS WITH OR WITHOUT TRANSOMS.

SINGLE (X) AND DOUBLE (XX) LEAF DOORS W/O TRANSOMS SEE ABOVE.

SINGLE (X) AND DOUBLE (XX) LEAF DOORS WITH TRANSOMS SEE SHEET 2.

SINGLE (X) AND DOUBLE (XX) LEAF DOORS WITH SMITH MOUNTAIN STOREFRONT SYSTEM SEE SHEET 3.

DOORS NOT APPROVED FOR INSTALLATIONS WHERE WATER INFILTRATION RESISTANCE IS REQUIRED.

THIS PRODUCT IS DESIGNED TO COMPLY WITH THE HIGH VELOCITY HURRICANE ZONE OF THE 2001 FLORIDA BUILDING CODE.

WOOD BUCKS BY OTHERS, MUST BE ANCHORED PROPERLY TO TRANSFER LOADS TO THE STRUCTURE.

ANCHORS SHALL BE AS LISTED, SPACED AS SHOWN ON DETAILS. ANCHOR EMBEDMENT TO BASE MATERIAL SHALL BE BEYOND WALL DRESSING OR STUCCO.

ANCHORING OR LOADING CONDITIONS NOT SHOWN IN THESE DETAILS ARE NOT PART OF THIS APPROVAL.

PRODUCT REVISED
as complying with the Florida Building Code
Acceptance No 04-1029.03
Expiration Date 12/04/08
By M Thrall
Miami Dade Product Control Division

Engr: DR. HUMAYOUN FAROOQ
STRUCTURES
FLA. PE # 16557
C.A.N. 3538

FEB 24 2004

AL-FAROOQ CORPORATION
ENGINEERS, PLANNERS & PRODUCT DESIGN
1235 SW 87 AVE
MIAMI, FLORIDA 33174
TEL. (305) 264-8100 FAX. (305) 262-6978
COMP-ANL\W03-58SM

SERIES MK-2 ALUM ENTRANCE DOOR (L.M.I.)

SMITH MOUNTAIN IMPACT SYSTEMS
11520 S.W. 120 ST.
MIAMI, FL. 33176
TEL. (305) 278-2878 FAX. (305) 278-2879

revisions:

no	date	by	description
A	10.17.03		REV. PER BCCO COMMENTS
B	02.13.04		NOTES REV. GLASS D ADDED

date: 07-30-03
scale: 1/2"=1'-0"
dr. by: HAMID
chk. by:

drawing no.
W03-58

SINGLE OR DOUBLE ENTRANCE DOORS WITH TRANSOM				
NOMINAL DIMS.			GLASS TYPES 'A', 'B', 'C' OR 'D'	
OVERALL WIDTH	DOOR HEIGHT	TRANSOM HEIGHT	EXT. (+)	INT. (−)
5/0	6/8	2/0	90.0	90.0
		2/6	90.0	90.0
		3/0	90.0	90.0
		3/4	90.0	90.0
	7/0	2/0	90.0	90.0
		2/6	90.0	90.0
		3/0	90.0	90.0
	7/6	2/0	90.0	90.0
		2/6	90.0	90.0
	8/0	2/0	90.0	90.0
6/0	6/8	2/0	90.0	90.0
		2/6	90.0	90.0
		3/0	90.0	90.0
		3/4	87.2	87.2
	7/0	2/0	90.0	90.0
		2/6	90.0	90.0
		3/0	87.9	87.9
	7/6	2/0	90.0	90.0
		2/6	88.9	88.9
	8/0	2/0	90.0	90.0

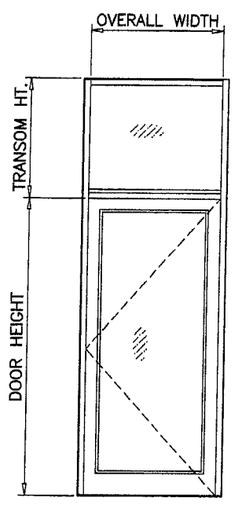

(O/X)

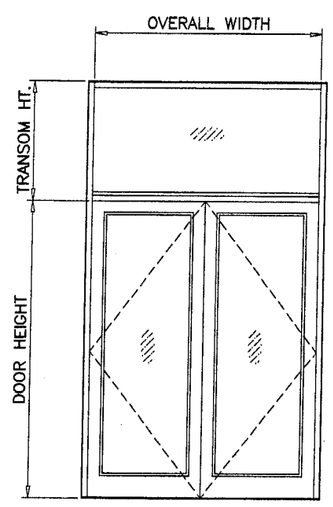

(O/XX)

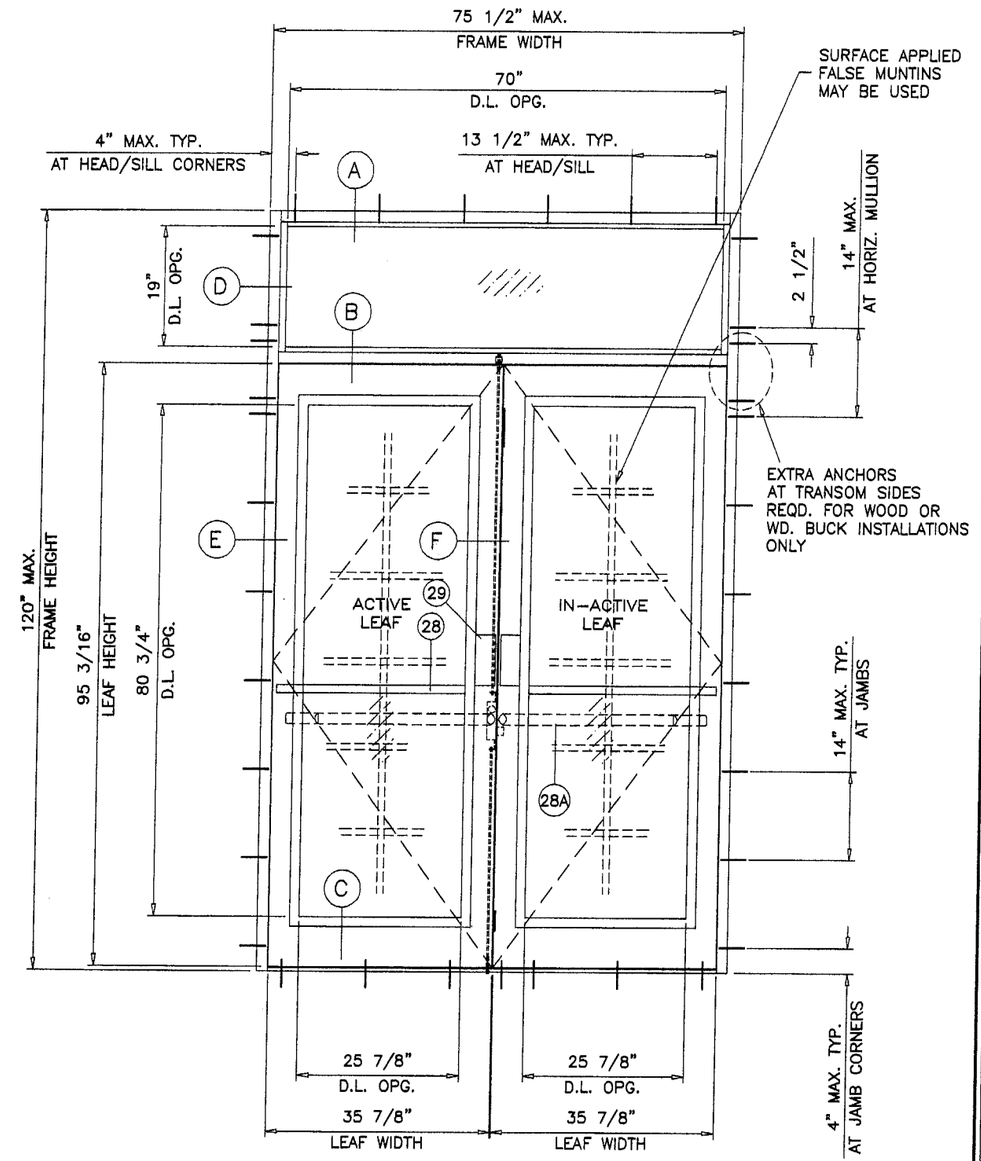

(O/XX)

TYPICAL ELEVATION

PRODUCT REVIEWED
as complying with the Florida
Building Code
Acceptance No. 04-1029.03
Expiration Date 12/04/08
By
Miami Dade Product Control
Division

Engr: DR. HUMAYOUN FAROOQ
STRUCTURES
FLA. PE # 16557
C.A.N. 3538

FEB 24 2004

AL-FAROOQ CORPORATION
ENGINEERS, PLANNERS & PRODUCT DESIGN
1235 SW 87 AVE
MIAMI, FLORIDA 33174
TEL. (305) 264-8100 FAX. (305) 262-6978

COMP-ANL\W03-58SM

SERIES MK-2 ALUM ENTRANCE DOOR (L.M.I.)

SMITH MOUNTAIN IMPACT SYSTEMS
11520 S.W. 120 ST.
MIAMI, FL. 33176
TEL. (305) 278-2878 FAX. (305) 278-2879

revisions:

no	date	by	description
A	10.17.03		REV. PER BCCO COMMENTS
B	02.13.04		NOTES REV. GLASS D ADDED

date: 07-30-03
scale: 1/2"=1'-0"
dr. by: HAMID
chk. by:

drawing no.
W03-58

DOOR MULLION ANCHOR LOAD CAPACITY – PSF
EXT.(+) & INT.(–)

NOMINAL DIMS.		ANCHORS TYPE 'A'		ANCHORS TYPE 'B' & 'C'	
WIDTH (W)	FRAME HEIGHT	A2	A3	B2 OR C2	B3 OR C3
24"	80"	100.0	100.0	100.0	100.0
30"		100.0	100.0	100.0	100.0
36"		99.6	100.0	100.0	100.0
42"		85.4	100.0	100.0	100.0
48"		74.7	100.0	100.0	100.0
54"		66.4	99.6	100.0	100.0
60"		59.8	89.6	100.0	100.0
66"		54.3	81.5	100.0	100.0
72"		49.8	74.7	100.0	100.0
24"	84"	100.0	100.0	100.0	100.0
30"		100.0	100.0	100.0	100.0
36"		94.9	100.0	100.0	100.0
42"		81.3	100.0	100.0	100.0
48"		71.1	100.0	100.0	100.0
54"		63.2	94.9	100.0	100.0
60"		56.9	85.4	100.0	100.0
66"		51.7	77.6	100.0	100.0
72"		47.4	71.1	100.0	100.0
24"	90"	100.0	100.0	100.0	100.0
30"		100.0	100.0	100.0	100.0
36"		88.5	100.0	100.0	100.0
42"		75.9	100.0	100.0	100.0
48"		66.4	99.6	100.0	100.0
54"		59.0	88.5	100.0	100.0
60"		53.1	79.7	100.0	100.0
66"		48.3	72.4	100.0	100.0
72"		44.3	66.4	93.7	100.0
24"	96"	100.0	100.0	100.0	100.0
30"		99.6	100.0	100.0	100.0
36"		83.0	100.0	100.0	100.0
42"		71.1	100.0	100.0	100.0
48"		62.3	93.4	100.0	100.0
54"		55.3	83.0	100.0	100.0
60"		49.8	74.7	100.0	100.0
66"		45.3	67.9	95.8	100.0
72"		41.5	62.3	87.8	100.0
24"	102"	100.0	100.0	100.0	100.0
30"		93.7	100.0	100.0	100.0
36"		78.1	100.0	100.0	100.0
42"		67.0	100.0	100.0	100.0
48"		58.6	87.9	100.0	100.0
54"		52.1	78.1	100.0	100.0
60"		46.9	70.3	99.2	100.0
66"		42.6	63.9	90.2	100.0
72"		–	–	–	–
24"	108"	100.0	100.0	100.0	100.0
30"		88.5	100.0	100.0	100.0
36"		73.8	100.0	100.0	100.0
42"		63.2	94.9	100.0	100.0
48"		55.3	83.0	100.0	100.0
54"		49.2	73.8	100.0	100.0
60"		44.3	66.4	93.7	100.0
66"		40.2	60.4	85.2	100.0

DOOR MULLIN ANCHOR LOAD CAPACITY – PSF
EXT.(+) & INT.(–)

NOMINAL DIMS.		ANCHORS TYPE 'A'		ANCHORS TYPE 'B' & 'C'	
WIDTH (W)	FRAME HEIGHT	A2	A3	B2 OR C2	B3 OR C3
24"	114"	100.0	100.0	100.0	100.0
30"		83.9	100.0	100.0	100.0
36"		69.9	100.0	100.0	100.0
42"		59.9	89.9	100.0	100.0
48"		52.4	78.6	100.0	100.0
54"		46.6	69.9	98.6	100.0
60"		41.9	62.9	88.8	100.0
24"	120"	99.6	100.0	100.0	100.0
30"		79.7	100.0	100.0	100.0
36"		66.4	99.6	100.0	100.0
42"		56.9	85.4	100.0	100.0
48"		49.8	74.7	100.0	100.0
54"		44.3	66.4	93.7	100.0
60"		39.8	59.8	84.3	100.0

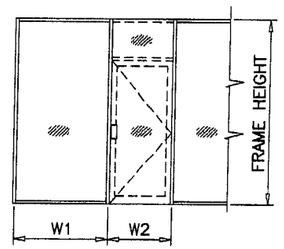

$$\text{WIDTH (W)} = \frac{W1 + W2}{2}$$

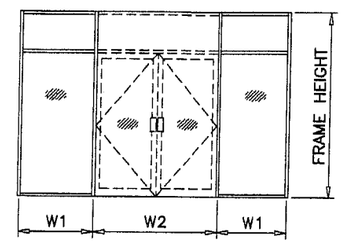

$$\text{WIDTH (W)} = \frac{W1 + W2}{2}$$

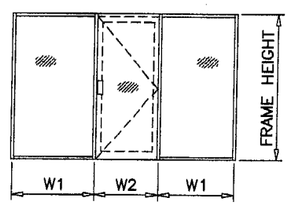

$$\text{WIDTH (W)} = \frac{W1 + W2}{2}$$

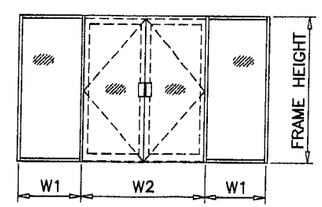

$$\text{WIDTH (W)} = \frac{W1}{2} + \frac{W2}{4}$$

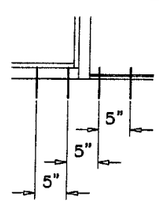

A2, B2, C2

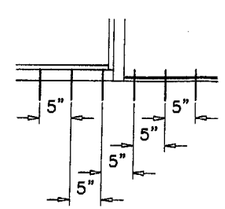

A3, B3, C3

ANCHORS TYPES: SEE SHEET 5 FOR DESCRIPTION

A2 = (2) ANCHORS TYPE 'A' AT EACH SIDE OF DOOR MULLION
B2 = (2) ANCHORS TYPE 'B' AT EACH SIDE OF DOOR MULLION
C2 = (2) ANCHORS TYPE 'C' AT EACH SIDE OF DOOR MULLION

A3 = (3) ANCHORS TYPE 'A' AT EACH SIDE OF DOOR MULLION
B3 = (3) ANCHORS TYPE 'B' AT EACH SIDE OF DOOR MULLION
C3 = (3) ANCHORS TYPE 'C' AT EACH SIDE OF DOOR MULLION

ALL OTHER ANCHORS TO BE SPACED AS PER ELEVATION.

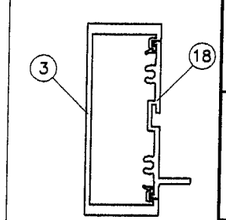

W/O REINFORCING

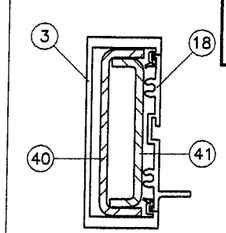

WITH REINFORCING

DOOR MULLION LOAD CAPACITY–PSF

WIDTH (W) INCHES	FRAME HEIGHT INCHES	W/O REINFORCING		WITH REINFORCING	
		EXT. (+)	INT. (–)	EXT. (+)	INT. (–)
36"	80"	90.0	90.0	90.0	100.0
42"		90.0	90.0	90.0	100.0
48"		90.0	90.0	90.0	100.0
54"		75.0	75.0	90.0	100.0
60"		75.0	75.0	90.0	100.0
66"		X	X	90.0	100.0
72"		X	X	90.0	100.0
36"	84"	90.0	90.0	90.0	100.0
42"		90.0	90.0	90.0	100.0
48"		90.0	90.0	90.0	100.0
54"		75.0	75.0	90.0	100.0
60"		75.0	75.0	90.0	100.0
66"		X	X	90.0	100.0
72"		X	X	90.0	100.0
36"	90"	90.0	90.0	90.0	100.0
42"		90.0	90.0	90.0	100.0
48"		75.0	75.0	90.0	100.0
54"		75.0	75.0	90.0	100.0
60"		X	X	90.0	100.0
66"		X	X	90.0	100.0
72"		X	X	90.0	100.0
36"	96"	90.0	90.0	90.0	100.0
42"		86.3	86.3	90.0	100.0
48"		75.0	75.0	90.0	100.0
54"		75.0	75.0	90.0	100.0
60"		X	X	90.0	100.0
66"		X	X	90.0	100.0
72"		X	X	90.0	100.0
36"	102"	75.0	75.0	90.0	100.0
42"		75.0	75.0	90.0	100.0
48"		75.0	75.0	90.0	100.0
54"		X	X	90.0	100.0
60"		X	X	90.0	100.0
66"		X	X	90.0	100.0
36"	108"	75.0	75.0	90.0	100.0
42"		75.0	75.0	90.0	100.0
48"		75.0	75.0	90.0	100.0
54"		X	X	90.0	100.0
60"		X	X	90.0	100.0
66"		X	X	90.0	100.0
36"	114"	X	X	90.0	100.0
42"		X	X	90.0	100.0
48"		X	X	90.0	100.0
54"		X	X	90.0	100.0
60"		X	X	90.0	100.0
36"	120"	X	X	90.0	100.0
42"		X	X	90.0	100.0
48"		X	X	90.0	100.0
54"		X	X	90.0	100.0
60"		X	X	90.0	100.0

Engr: DR. HUMAYOUN FAROOQ
STRUCTURES
FLA. PE # 16557
C.A.N. 3538

FEB 24 2004

PRODUCT REVISED
in complying with the Florida Building Code
Acceptance No. 04-1029.03
Expiration Date 12/04/08
By: M Shah
Miami Dade Product Control Division

AL-FAROOQ CORPORATION
ENGINEERS, PLANNERS & PRODUCT DESIGN
1235 SW 87 AVE
MIAMI, FLORIDA 33174
TEL. (305) 264-8100 FAX. (305) 262-6978
COMP-ANL\W03-58SM

SERIES MK-2 ALUM ENTRANCE DOOR (L.M.I.)

SMITH MOUNTAIN IMPACT SYSTEMS
11520 S.W. 120 ST.
MIAMI, FL. 33176
TEL. (305) 278-2878 FAX. (305) 278-2879

revisions:

no	date	by	description
B	02.13.04		DOOR MULLION CHART ADDED

date: 07-30-03
scale: 3/8" = 1"
dr. by: HAMID
chk. by:

drawing no.
W03-58

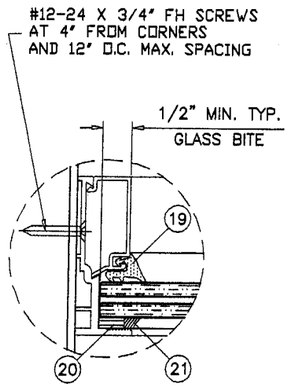

TRANSOM JAMB

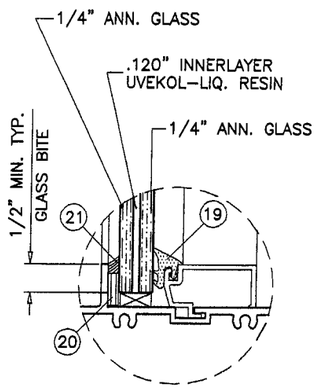

GLASS TYPE 'A'

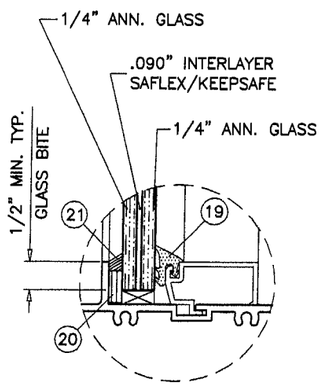

GLASS TYPE 'B'

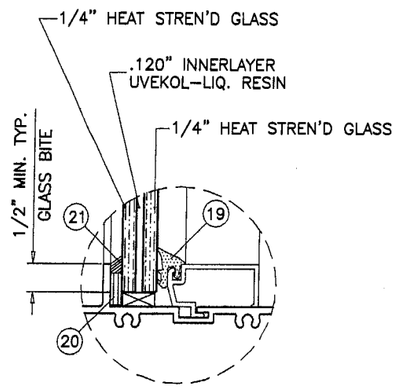

GLASS TYPE 'C'

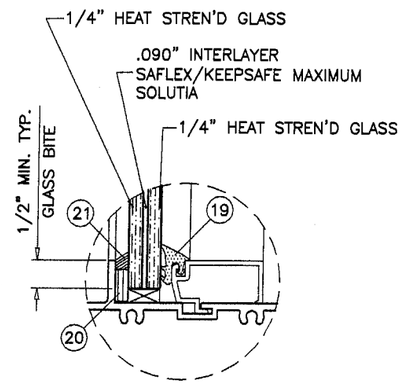

GLASS TYPE 'D'

GLAZING DETAILS TRANSOM

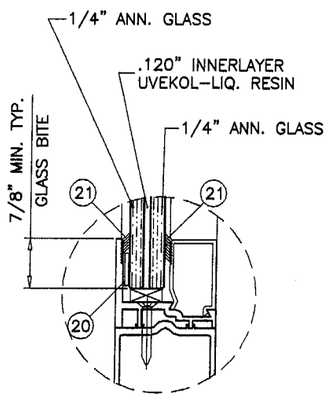

GLASS TYPE 'A'

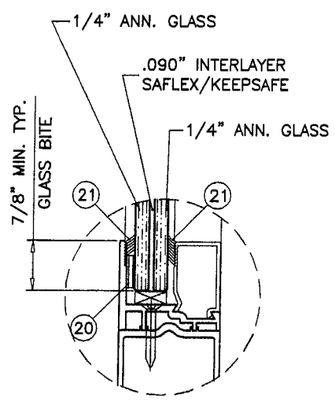

GLASS TYPE 'B'

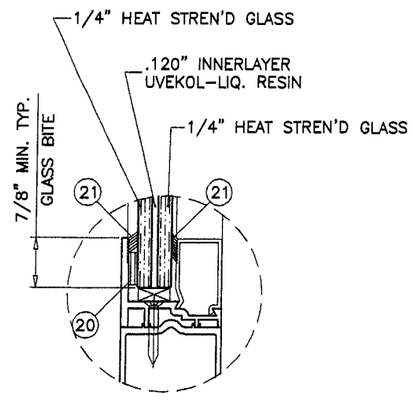

GLASS TYPE 'C'

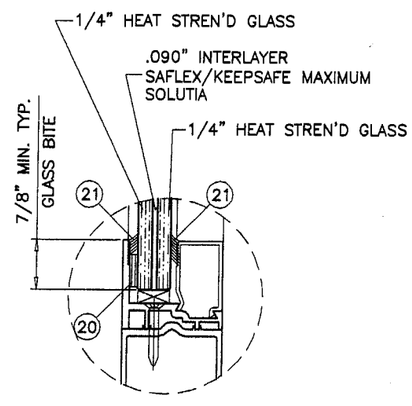

GLASS TYPE 'D'

GLAZING DETAILS DOOR LEAF

PRODUCT REVIEWED
as complying with the Florida
Building Code
Acceptance No. 04-1029.03
Expiration Date 12/04/08
By
Miami Dade Product Control
Division

Engr: DR. HUMAYOUN FAROOQ
STRUCTURES
FLA. PE # 16557
C.A.N. 3538

FEB 24 2004

AL-FAROOQ CORPORATION
ENGINEERS, PLANNERS & PRODUCT DESIGN
1235 SW 87 AVE
MIAMI, FLORIDA 33174
TEL. (305) 264-8100 FAX. (305) 262-6978
COMP-ANL\W03-58SM

SERIES MK-2 ALUM ENTRANCE DOOR (L.M.I.)

SMITH MOUNTAIN IMPACT SYSTEMS
11520 S.W. 120 ST.
MIAMI, FL. 33176
TEL. (305) 278-2878 FAX. (305) 278-2879

revisions:

no	date	by	description
A	10.17.03		NO CHANGE THIS SHEET
B	02.13.04		GLASS D ADDED

date: 07-30-03
scale: 3/8" = 1"
dr. by: HAMID
chk. by:

drawing no.
W03-58

sheet 4 of 10

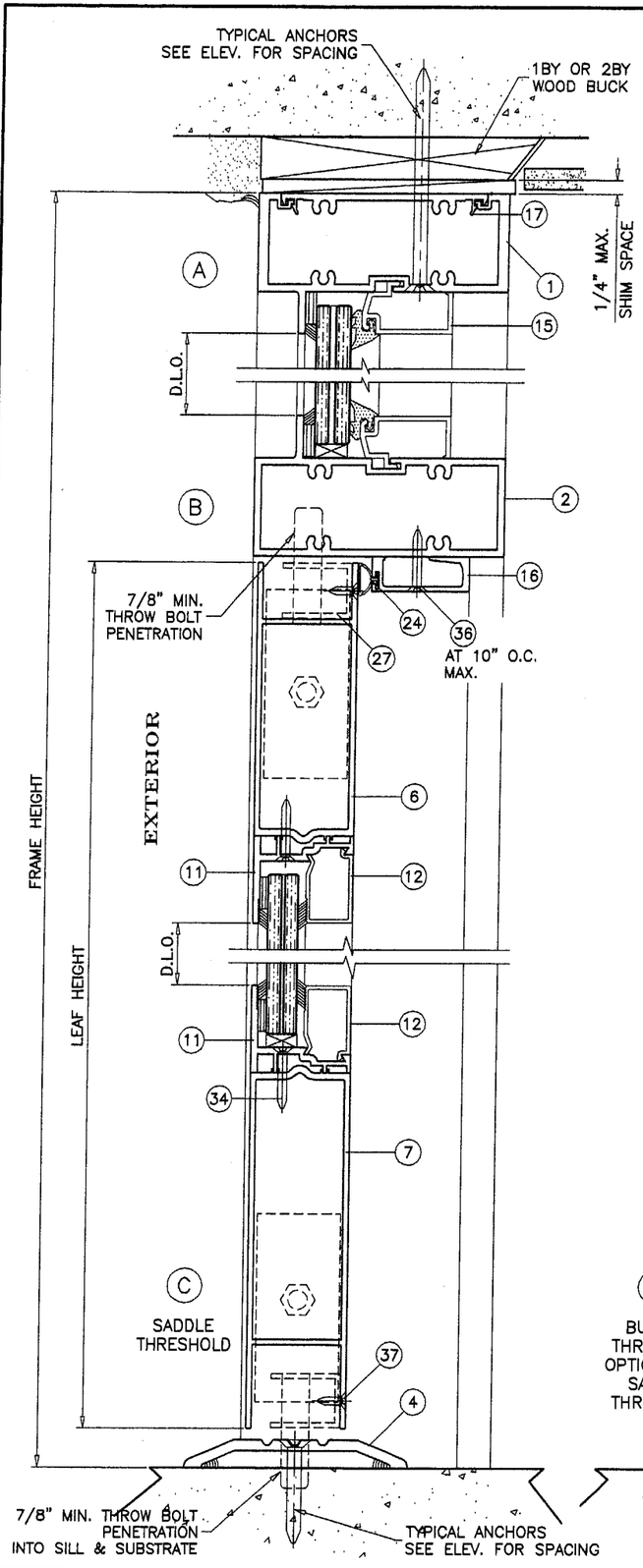

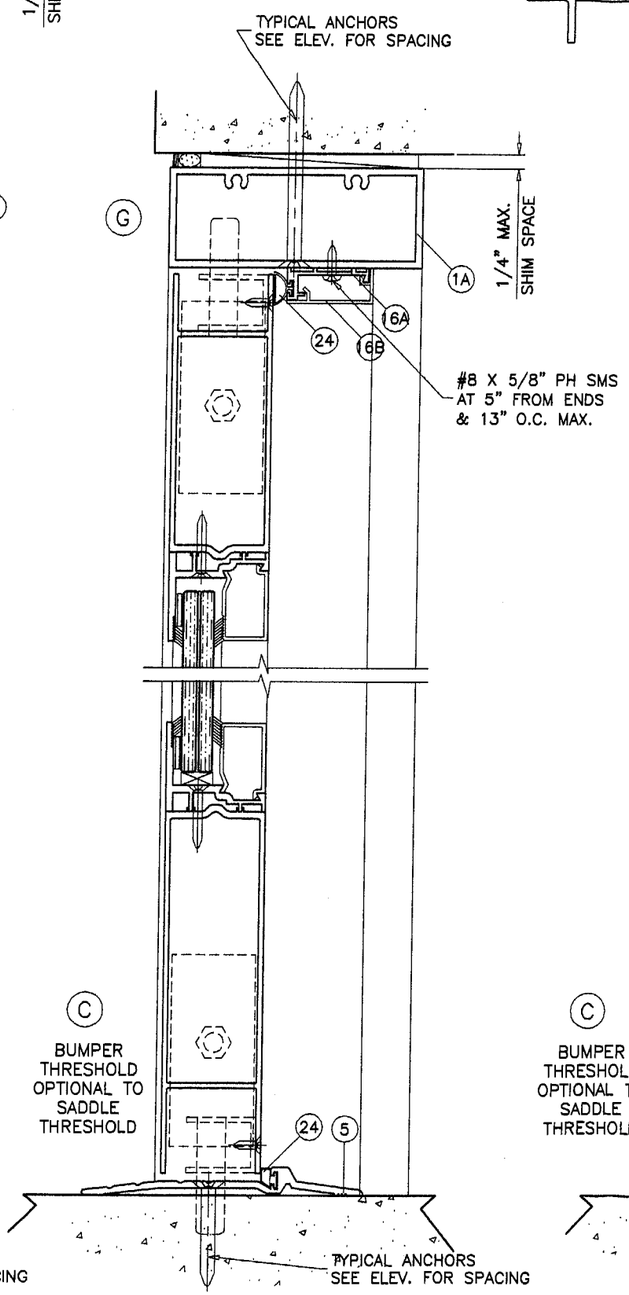

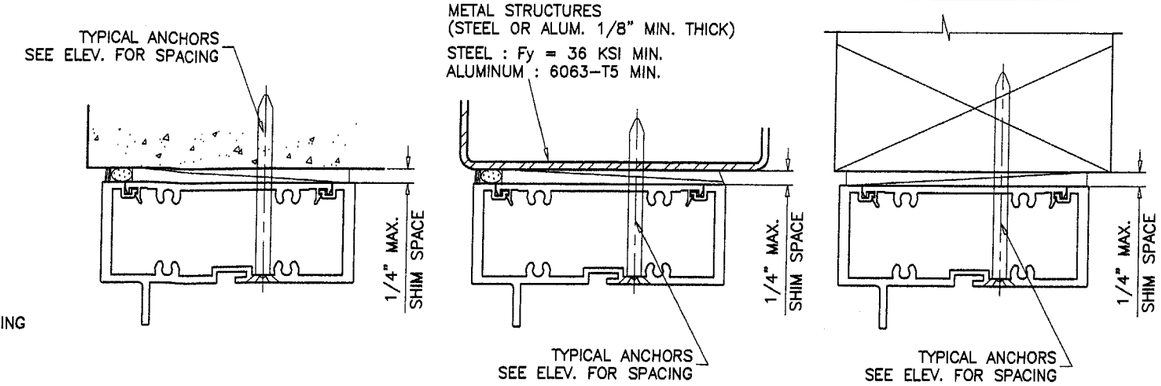

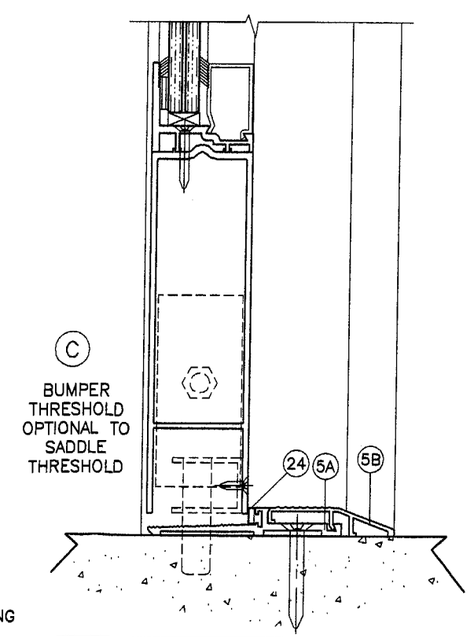

WOOD BUCKS NOT BY SMITH MOUNTAIN, MUST SUSTAIN LOADS IMPOSED BY GLAZING SYSTEM AND TRANSFER THEM TO THE BUILDING STRUCTURE.

TYPICAL ANCHORS: SEE ELEV. FOR SPACING

TYPE 'A'– 1/4" DIA TAPCONS
INTO WOOD BUCKS OR WOOD STRUCTURES
1-1/2" MIN. PENETRATION INTO WOOD

THRU 1BY OR 2BY WOOD BUCKS INTO MASONRY OR CONC.
1-1/4" MIN. EMBED INTO MASONRY OR CONC.

TYPE 'B'– 1/4" DIA TAPCONS
DIRECTLY INTO MASONRY OR CONC.
1-1/4" MIN. EMBED INTO MASONRY OR CONC.

TYPE 'C'– 1/4" SELF DRILLING SCREWS (DRILLFLEX OR EQUIV.)
INTO METAL STRUCTURES
(STEEL OR ALUMINUM 1/8" MIN. THICK.)

STEEL : Fy = 36 KSI MIN.
ALUMINUM : 6063-T5 MIN.

SEALANTS:

ALL FRAME AND LEAF CORNERS AND INSTALLATION SCREWS SEALED WITH SILICONE.

PRODUCT REVISED
as complying with the Florida Building Code
Acceptance No 04-1029.03
Expiration Date 12/04/08
By M Strait
Miami Dade Product Control Division

Engr: DR. HUMAYOUN FAROOQ
STRUCTURES
FLA. PE # 16557
C.A.N. 3538

FEB 24 2004

AL-FAROOQ CORPORATION
ENGINEERS, PLANNERS & PRODUCT DESIGN
1235 SW 87 AVE
MIAMI, FLORIDA 33174
TEL. (305) 264-8100 FAX. (305) 262-6978
COMP-ANL\W03-58SM

SERIES MK-2 ALUM ENTRANCE DOOR (L.M.I.)

SMITH MOUNTAIN IMPACT SYSTEMS
11520 S.W. 120 ST.
MIAMI, FL. 33176
TEL. (305) 278-2878 FAX. (305) 278-2879

revisions:

no	date	by	description
A	10.17.03		NO CHANGE THIS SHEET
B	02.13.04		ALT. STOP & THRESHOLD ADD.

date: 07-30-03
scale: 3/8" = 1"
dr. by: HAMID
chk. by:

drawing no.
W03-58

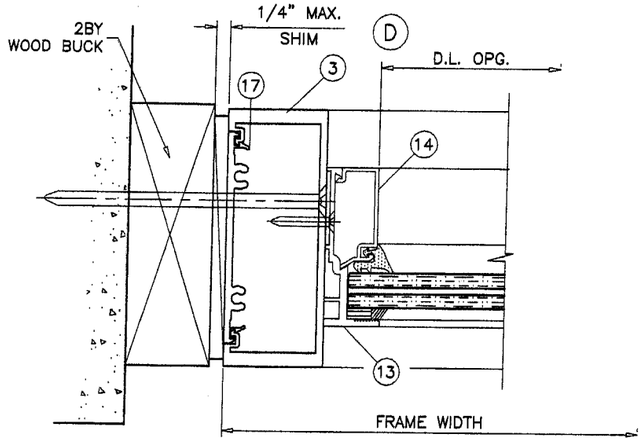

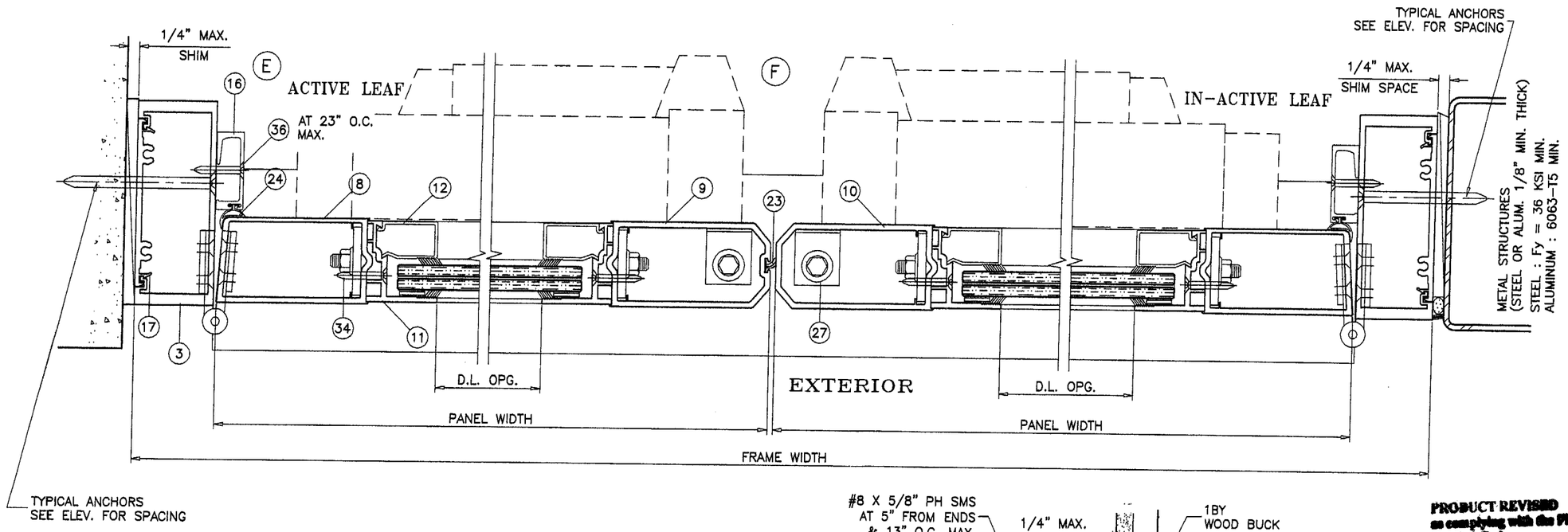

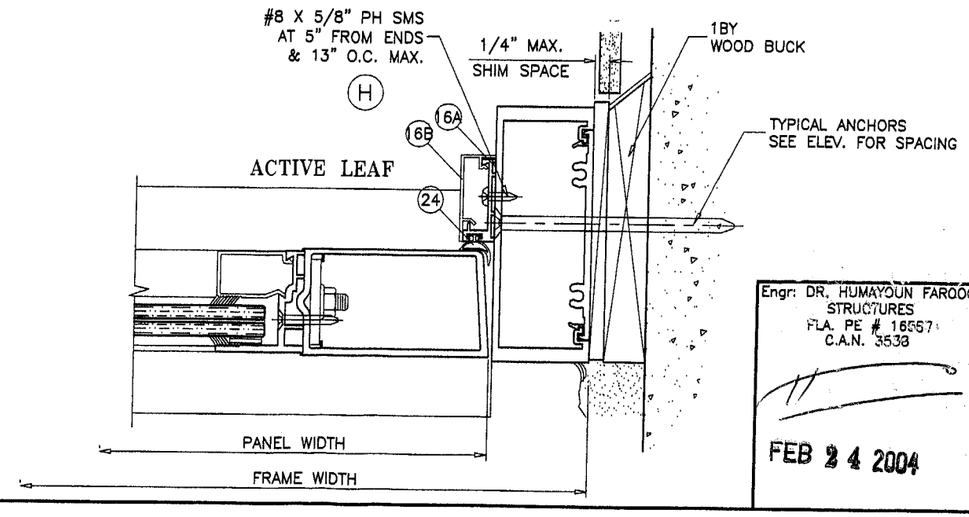

PRODUCT REVISED
as complying with the Florida Building Code
Acceptance No. 04-1029.03
Expiration Date 12/04/08
By M Shah
Miami Dade Product Control Division

Engr: DR. HUMAYOUN FAROOQ
STRUCTURES
FLA. PE # 16557
C.A.N. 3538

FEB 24 2004

AL-FAROOQ CORPORATION
ENGINEERS, PLANNERS & PRODUCT DESIGN
1235 SW 87 AVE
MIAMI, FLORIDA 33174
TEL. (305) 264-8100 FAX. (305) 262-6978
COMP-ANL\W03-58SM

SERIES MK-2 ALUM ENTRANCE DOOR (L.M.I.)

SMITH MOUNTAIN IMPACT SYSTEMS

11520 S.W. 120 ST.
MIAMI, FL. 33176
TEL. (305) 278-2878 FAX. (305) 278-2879

revisions:

no	date	by	description
A	10.17.03		PANIC DEVICE OPTION ADDED

date: 07-30-03
scale: 3/8" = 1"
dr. by: HAMID
chk. by:

drawing no.
W03-58

sheet 6 of 10

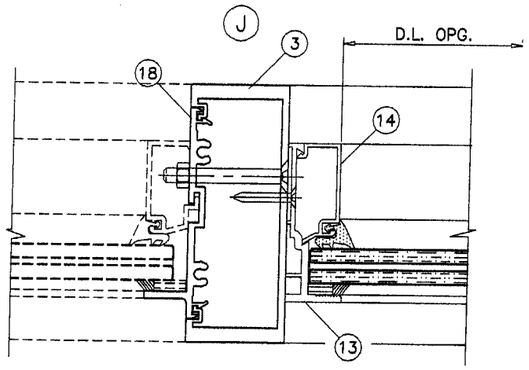

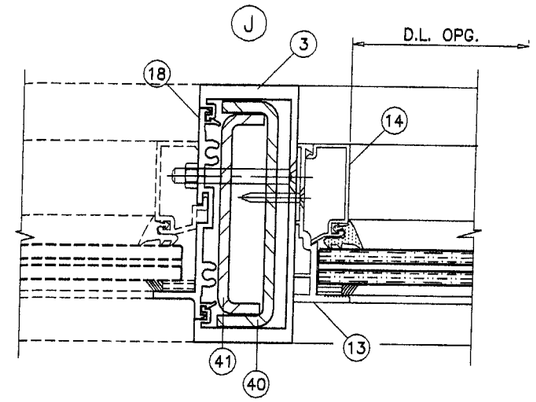

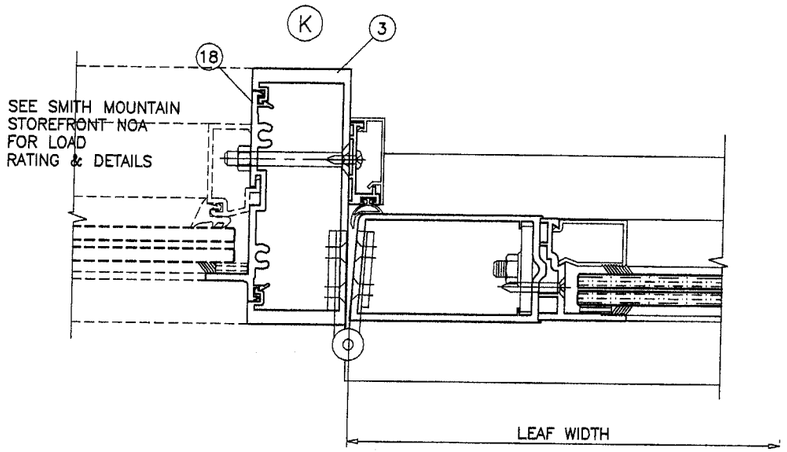

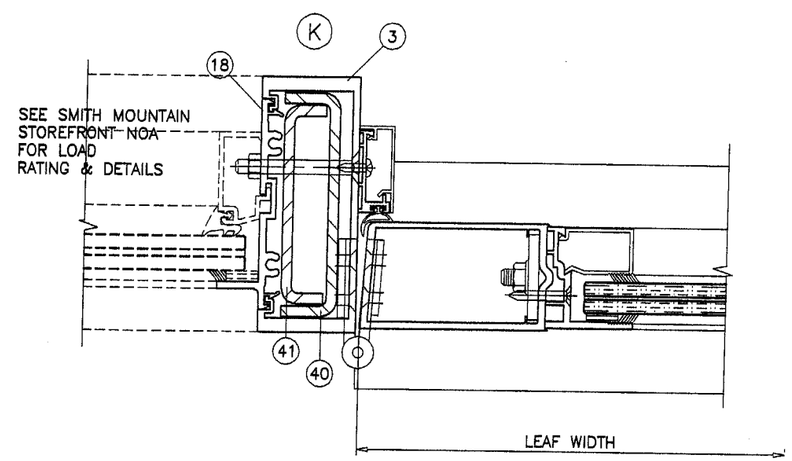

PRODUCT REVIEWED
as complying with the Florida
Building Code
Acceptance No 04-1029.03
Expiration Date 12/04/08
By M Khan
Miami Dade Product Control
Division

Engr: DR. HUMAYOUN FAROOQ
STRUCTURES
FLA. PE # 16557
C.A.N. 3538

FEB 24 2004

SERIES MK-2 ALUM ENTRANCE DOOR (L.M.I.)

SMITH MOUNTAIN IMPACT SYSTEMS
11520 S.W. 120 ST.
MIAMI, FL. 33176
TEL. (305) 278-2878 FAX. (305) 278-2879

AL-FAROOQ CORPORATION
ENGINEERS, PLANNERS & PRODUCT DESIGN
1235 SW 87 AVE
MIAMI, FLORIDA 33174
TEL. (305) 264-8100 FAX. (305) 262-6978

COMP-ANL\W03-58SM

revisions:

no	date	by	description
B	02.13.04		DOOR MULLION DETAIL ADDED

date: 07-30-03
scale: 3/8" = 1"
dr. by: HAMID
chk. by:

drawing no.
W03-58

sheet 7 of 10

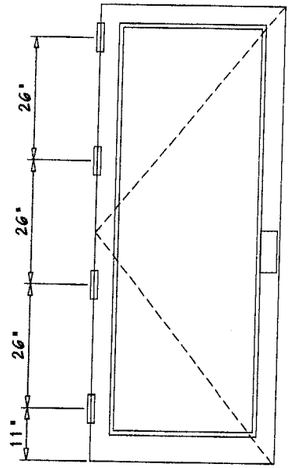

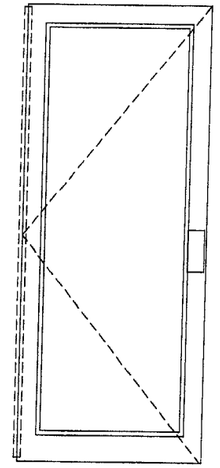

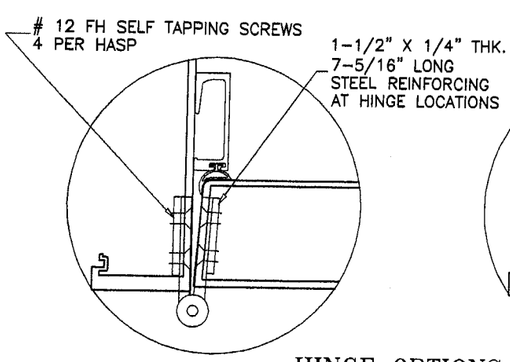

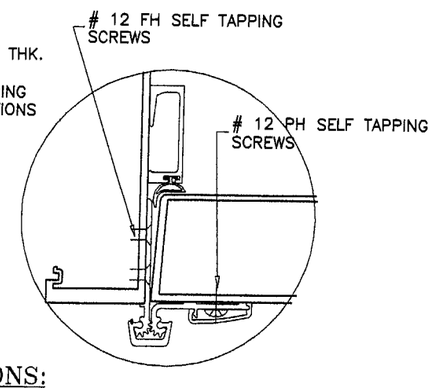

HINGE OPTIONS:

4-1/2" BRASS BUTT HINGES

HAGER # BB-1199

CONCEALED ALUM ROTON HINGE

CONTINUOUS ALUMINUM
ROTTON HINGE HAGER # 780-112
FASTENED TO FRAME JAMB AND TO JAMB STILE
WITH (27) TOTAL SCREWS ON 8/O DOORS
WITH (25) TOTAL SCREWS ON 6/8 & 7/O DOORS

LOCK OPTIONS:
STANDARD HARDWARE

SINGLE LEAF DOORS:

ALL SINGLE LEAF DOORS TO BE FITTED WITH
3 POINT LOCK

DOUBLE LEAF DOORS:

ACTIVE LEAF:

THREE POINT LOCK SYSTEM WITH 8 PLY HOOK LOCK BOLT ADAMS RITE NO. 4015 & 4016, KEY OPERATED ON EXTERIOR AND THUMB-TURN ON INTERIOR, LOCATED AT 34" FROM BOTTOM OF PANEL

INACTIVE LEAF:

TWO POINT LOCK SYSTEM ADAMS RITE NO. 1880 WITH THUMB TURN ON THE INTERIOR, LOCATED AT 34" FROM BOTTOM OF PANEL

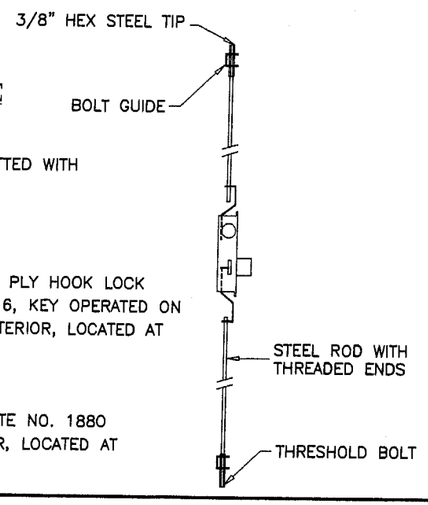

LOCK OPTIONS:
PANIC EXIT DEVICES

OPTION #1:

ACTIVE/INACTIVE LEAF

VON DUPRIN SERIES 33 CONCEALED VERTICAL ROD
PANIC EXIT DEVICE
WITH 5/8" THROW LATCH BOLT PENETRATING 3/4" AT HEAD & SILL

OPTION #2:

ACTIVE/INACTIVE LEAF

REGENT SERIES 5770 CONCEALED VERTICAL ROD
PANIC EXIT DEVICE
WITH 5/8" THROW LATCH BOLT PENETRATING 3/4" AT HEAD & SILL

ITEM #	PART #	REQD.	DESCRIPTION	MATERIAL	MANF./SUPPLIER/REMARKS
1	5806A	1	FRAME HEAD	6063-T5	–
1A	6421	1	ALT. FRAME HEAD	6063-T5	–
2	5710	AS REQD.	FRAME TRANSOM	6063-T5	–
3	6007	2	FRAME JAMB	6063-T5	–
4	24703	1	SADDLE THRESHOLD	6063-T5	–
5	K2-13	1	BUMPER THRESHOLD	6063-T5	–
5A	SMM-023	1	ALT. BUMPER THRESHOLD	6063-T5	–
5B	SMM-024	1	BUMPER THRESHOLD COVER	6063-T5	–
6	5984	1/ LEAF	TOP RAIL	6063-T5	–
7	5987	1/ LEAF	BOTTOM RAIL	6063-T5	–
8	5986	1/ LEAF	HINGE STILE	6063-T5	–
9	5983	1	LOCK STILE (ACTIVE)	6063-T5	–
10	–	1	LOCK STILE (IN-ACTIVE)	6063-T5	–
11	5981	4/ LEAF	EXTERIOR GLASS STOP (DOOR)	6063-T5	–
12	5982	4/ LEAF	INTERIOR GLASS STOP (DOOR)	6063-T5	–
13	K2-11	–	EXTERIOR GLASS STOP (TRANSOM JAMB)	–	–
14	K2-10	–	INTERIOR GLASS STOP (TRANSOM JAMB)	–	–
15	5712	2/ LITE	GLASS STOP (TRANSOM HEAD/SILL)	–	–
16	–	3/ DOOR	DOOR STOP	6063-T5	–
16A	SMM-002	3/ DOOR	ALT. DOOR STOP	6063-T5	–
16B	SMM-001	3/ DOOR	DOOR STOP COVER	6063-T5	–
17	K2-15	OPTIONAL	FLAT FILLER	–	–
18	–	–	–	–	–
19	H-63	AS REQD.	WEDGE-IN GASKET	NEOPRENE	UNIVERSAL RUBBER CO.
20	V2104	AS REQD.	GLAZING TAPE (1/2" X 1/8")	FOAM	NORTON
21	895	–	GLAZING COMPOUND	SILICONE	PECORA
22	–	–	–	–	–
23	PB8300-8349	AS REQD.	PILE WITH PLASTIC FIN W'STRIPPING	–	–
24	–	AS REQD.	BULB W'STRIPPING	VINYL	–
25	–	–	–	–	–
26	–	2/ LEAF	3/8" THREADED ROD WITH NUT	STEEL	–
27	–	2/ LEAF	FLUSH BOLT GUIDE	ST. STEEL	–
28	–	AS REQD.	PUSH BAR	–	–
28A	–	AS REQD.	EXIT DEVICE	–	VON DUPRIN OR REGENT
29	–	AS REQD.	PULL HANDLE	–	–
30	–	2	THRESHOLD CLIP	ALUMINUM	2" X 2" X 1/8" X 3/4" LONG
31	–	4/ LEAF	SUPPORT PLATE (1-1/2" X 3-3/8" X 3/16")	ALUMINUM	–
32	–	–	–	–	–
33	#12 X 1-1/2"	AS REQD.	FRAME ASSEMBLY SCREWS	–	HEX H SELF DRILLING
34	#10 X 1-1/2"	AS REQD.	GLASS STOP SCREWS	–	FH SMS
35	#12 X 3/4"	AS REQD.	THRESHOLD CLIP SCREWS	–	FH SELF DRILLING
36	#10 X 1-1/4"	AS REQD.	DOOR STOP SCREWS	–	FH SMS
37	#10 X 5/16"	2/ GUIDE	GUIDE INSTALLATION SCREWS	–	FH MS
40	–	OPTIONAL	REINFORCING CHANNEL (DOOR MULL)	STEEL	1" X 3-15/16" X 1" X 3/16" THK.
41	–	OPTIONAL	REINFORCING CHANNEL (DOOR MULL)	STEEL	3/4" X 3-1/2" X 3/4" X 3/16" THK.

PRODUCT REVISED
as complying with the Florida
Building Code
Acceptance No. 04-1029.03
Expiration Date 12/04/08
By M Shah
Miami Dade Product Control
Division

Engr: DR. HUMAYOUN FAROOQ
STRUCTURES
FLA. PE # 16557
C.A.N. 3538

FEB 24 2004

AL-FAROOQ CORPORATION
ENGINEERS, PLANNERS & PRODUCT DESIGN
1235 SW 87 AVE
MIAMI, FLORIDA 33174
TEL. (305) 264-8100 FAX. (305) 262-6978
COMP-ANL\W03-58SM

SERIES MK-2 ALUM ENTRANCE DOOR (L.M.I.)

SMITH MOUNTAIN IMPACT SYSTEMS
11520 S.W. 120 ST.
MIAMI, FL. 33176
TEL. (305) 278-2878 FAX. (305) 278-2879

revisions:

no	date	by	description
A	10.17.03		NO CHANGE THIS SHEET
B	02.13.04		PANIC LOCK OPTION ADDED

date: 07-30-03
scale: 3/8" = 1"
dr. by: HAMID
chk. by:

drawing no.
W03-58

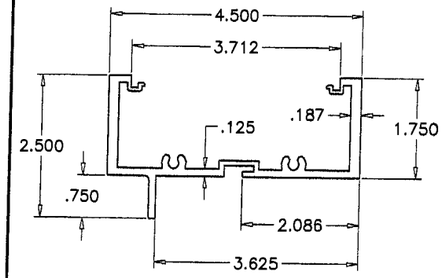

FRAME HEAD

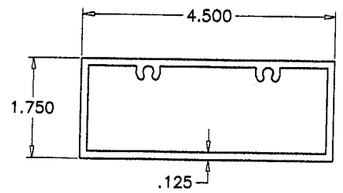

ALT. FRAME HEAD

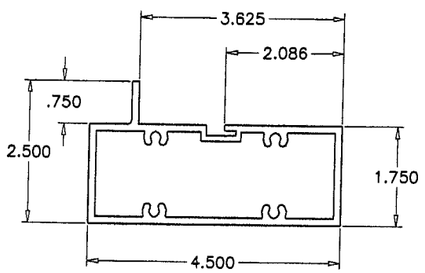

FRAME TRANSOM

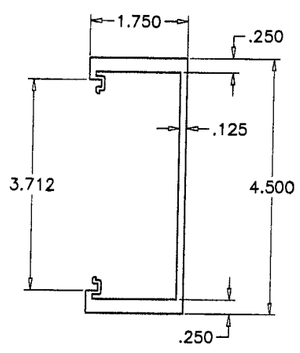

FRAME JAMB

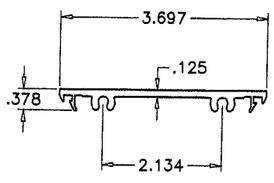

FLAT FILLER

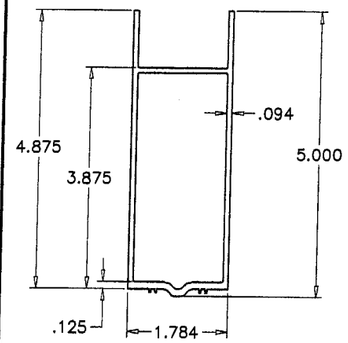

TOP RAIL

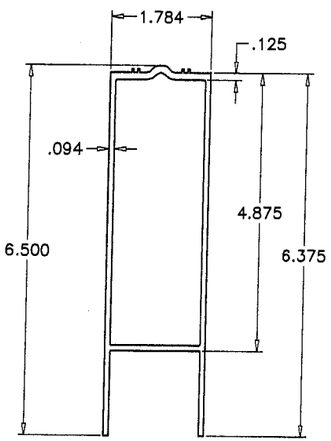

BOTTOM RAIL

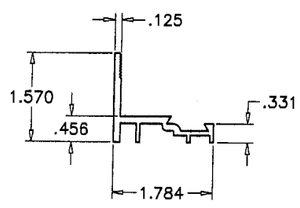

EXTERIOR GLASS STOP (DOOR)

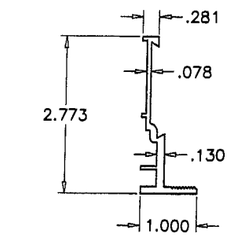

EXTERIOR GLASS STOP (TRANSOM)

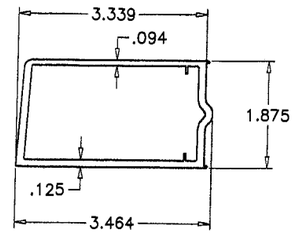

HINGE STILE

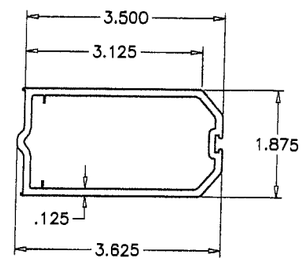

LOCK STILE (ACTIVE)

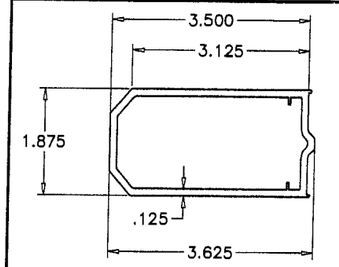

LOCK STILE (IN-ACTIVE)

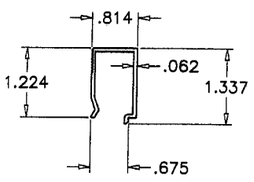

INTERIOR GLASS STOP (DOOR)

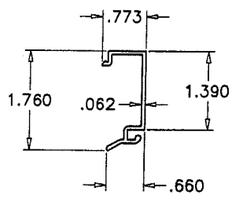

INTERIOR GLASS STOP (TRANSOM)

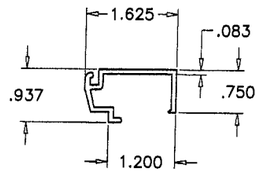

GLASS STOP (TRANSOM HEAD/SILL)

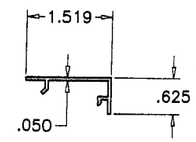

DOOR STOP COVER

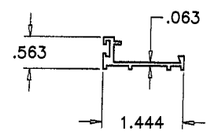

ALT. DOOR STOP

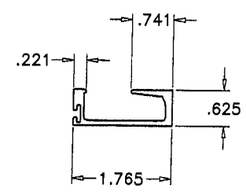

DOOR STOP

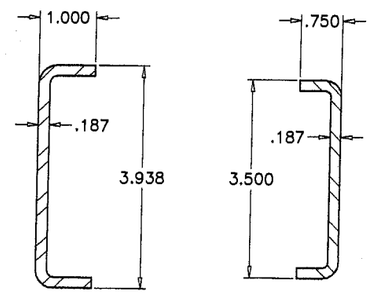

REINFORCING CHANNEL DOOR MULLION

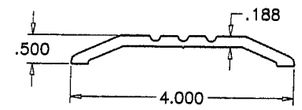

SADDLE THRESHOLD

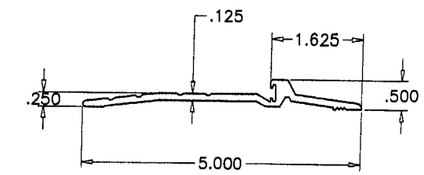

BUMPER THRESHOLD

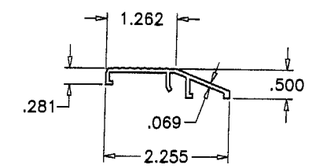

THRESHOLD COVER

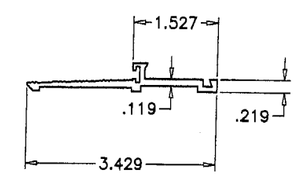

ALT. BUMPER THRESHOLD

PRODUCT REVISED
as complying with the Florida Building Code
Acceptance No. 04-1029.03
Expiration Date 12/04/08
By M Thabet
Miami Dade Product Control Division

Engr: DR. HUMAYOUN FAROOQ
STRUCTURES
FLA. PE # 16557
C.A.N. 3536

FEB 24 2004

AL-FAROOQ CORPORATION
ENGINEERS, PLANNERS & PRODUCT DESIGN
1235 SW 87 AVE
MIAMI, FLORIDA 33174
TEL. (305) 264-8100 FAX. (305) 262-6978
COMP-ANL\W03-58SM

SERIES MK-2 ALUM ENTRANCE DOOR (L.M.I.)

SMITH MOUNTAIN IMPACT SYSTEMS
11520 S.W. 120 ST.
MIAMI, FL. 33176
TEL. (305) 278-2878 FAX. (305) 278-2879

revisions:

no	date	by	description
A	10.17.03		NO CHANGE THIS SHEET
B	02.13.04		ALT. STOP & THRESHOLD ADD.

date: 07-30-03
scale: 3/8" = 1"
dr. by: HAMID
chk. by:

drawing no.
W03-58

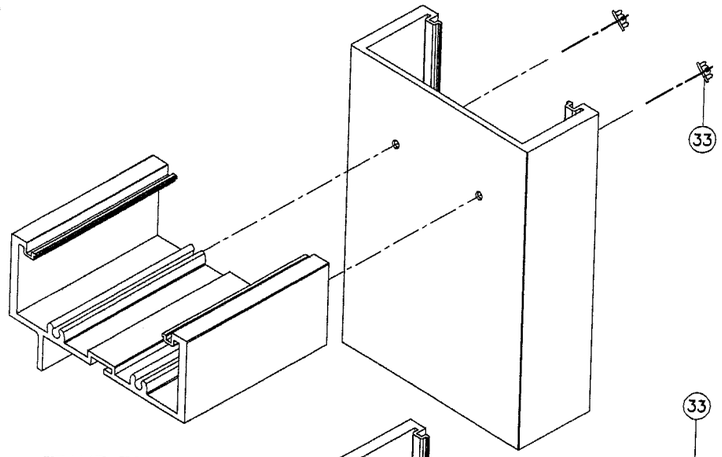

FRAME TOP CORNER

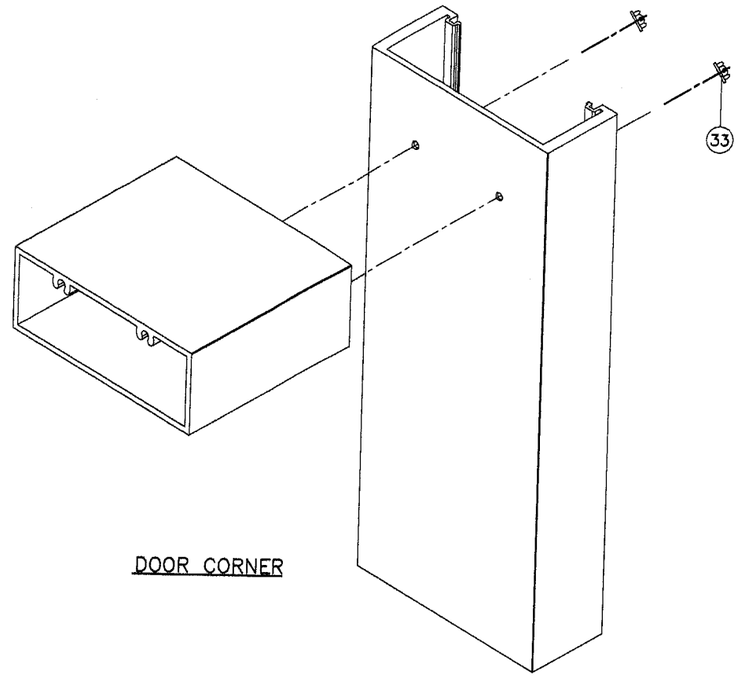

DOOR CORNER

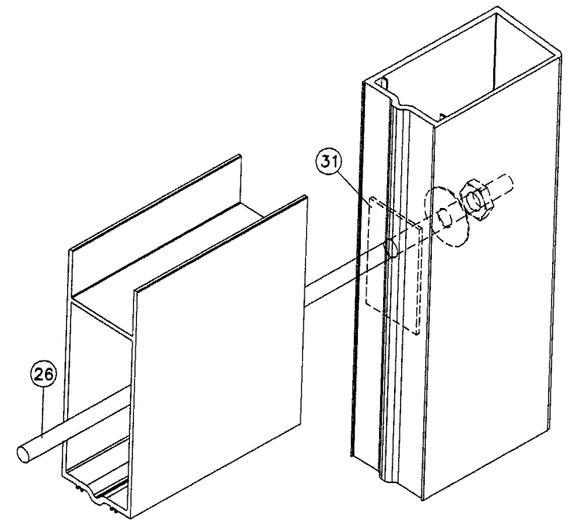

DOOR LEAF CORNER

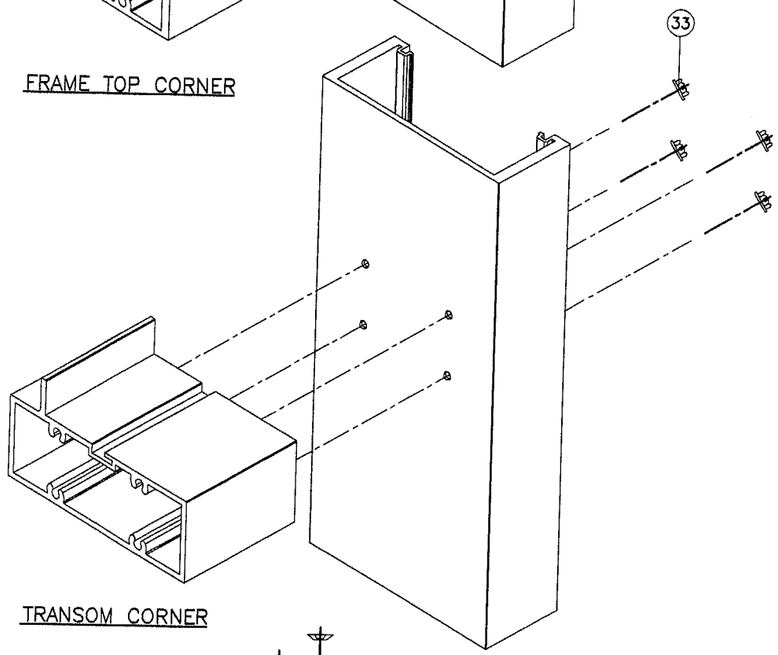

TRANSOM CORNER

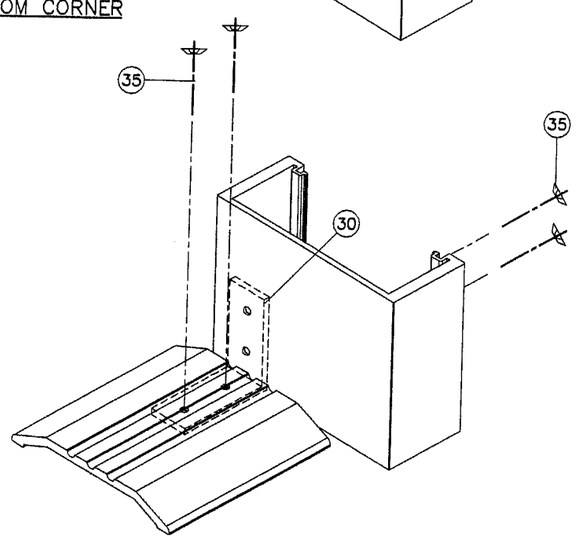

FRAME BOTTOM CORNER

PRODUCT REVISED
as complying with the Florida Building Code
Acceptance No. 04-1029.03
Expiration Date 12/04/09
By [illegible]
Miami Dade Product Control Division

Engr: DR. HUMAYOUN FAROOQ
STRUCTURES
FLA. PE # 16557
C.A.N. 3538

FEB 24 2004

SERIES MK-2 ALUM ENTRANCE DOOR (L.M.I.)

SMITH MOUNTAIN SYSTEMS
11520 S.W. 120 ST.
MIAMI, FL. 33176
TEL. (305) 278-2879 FAX. (305) 278-2878

AL-FAROOQ CORPORATION
ENGINEERS, PLANNERS & PRODUCT DESIGN
1235 SW 87 AVE
MIAMI, FLORIDA 33174
TEL. (305) 264-8100 FAX. (305) 262-6978

COMP-ANL\W03-58SM

revisions:

no	date	by	description
A	10.17.03		NO CHANGE THIS SHEET
B	02.13.04		DOOR CORNER DETAIL ADDED

date: 07-30-03
scale: 3/8" = 1"
dr. by: HAMID
chk. by:

drawing no.
W03-58

sheet 10 of 10