MIAMI-DADE COUNTY

BUILDING CODE COMPLIANCE OFFICE (BCCO)
PRODUCT CONTROL DIVISION

MIAMI-DADE COUNTY, FLORIDA
METRO-DADE FLAGLER BUILDING
140 WEST FLAGLER STREET, SUITE 1603
MIAMI, FLORIDA 33130-1563
(305) 375-2901 FAX (305) 375-2908
www.buildingcodeonline.com

NOTICE OF ACCEPTANCE (NOA)

Silverline Building Products Corporation
One Silverline Drive
New Brunswick, NJ 08902

SCOPE:

This NOA is being issued under the applicable rules and regulations governing the use of construction materials. The documentation submitted has been reviewed by Miami-Dade County Product Control Division and accepted by the Board of Rules and Appeals (BORA) to be used in Miami Dade County and other areas where allowed by the Authority Having Jurisdiction (AHJ).

This NOA shall not be valid after the expiration date stated below. The Miami-Dade County Product Control Division (In Miami Dade County) and/or the AHJ (in areas other than Miami Dade County) reserve the right to have this product or material tested for quality assurance purposes. If this product or material fails to perform in the accepted manner, the manufacturer will incur the expense of such testing and the AHJ may immediately revoke, modify, or suspend the use of such product or material within their jurisdiction. BORA reserves the right to revoke this acceptance, if it is determined by Miami-Dade County Product Control Division that this product or material fails to meet the requirements of the applicable building code.

This product is approved as described herein, and has been designed to comply with the Florida Building Code, including the High Velocity Hurricane Zone.

DESCRIPTION: Series "2700" Aluminum Clipped Tube Mullion

APPROVAL DOCUMENT: Drawing No. **S-2489**, sheets 1 through 16 of 16,dated 11/02/04, with last revision "**3**" dated 12/14/05, prepared by R.W. Building Consultants, Inc., signed and sealed by Lyndon F. Schmidt, P.E., bearing the Miami-Dade County Product Control Approval stamp with the Notice of Acceptance number and approval date by the Miami-Dade County Product Control Division.

MISSILE IMPACT RATING: None

LABELING: Each unit shall bear a permanent label with the manufacturer's name or logo, city, state and following statement: "Miami-Dade County Product Control Approved", unless otherwise noted herein.

RENEWAL of this NOA shall be considered after a renewal application has been filed and there has been no change in the applicable building code negatively affecting the performance of this product.

TERMINATION of this NOA will occur after the expiration date or if there has been a revision or change in the materials, use, and/or manufacture of the product or process. Misuse of this NOA as an endorsement of any product, for sales, advertising or any other purposes shall automatically terminate this NOA. Failure to comply with any section of this NOA shall be cause for termination and removal of NOA.

ADVERTISEMENT: The NOA number preceded by the words Miami-Dade County, Florida, and followed by the expiration date may be displayed in advertising literature. If any portion of the NOA is displayed, then it shall be done in its entirety.

INSPECTION: A copy of this entire NOA shall be provided to the user by the manufacturer or its distributors and shall be available for inspection at the job site at the request of the Building Official.

This NOA and consists of this page 1 and evidence pages E-1 and E-2, as well as approval document mentioned above.

The submitted documentation was reviewed by **Jaime D. Gascon, P.E.**

J. Gascon
3/29/06

PRODUCT CONTROL ACCEPTED

Silverline Building Products Corporation

NOTICE OF ACCEPTANCE: EVIDENCE SUBMITTED

A. DRAWINGS

1. Manufacturer's die drawings and sections.
2. Drawing No. **S-2489**, sheets 1 through 16 of 16 dated 11/02/04, with last revision "**3**" dated 12/14/05, prepared by R.W. Building Consultants, Inc., signed and sealed by Lyndon F. Schmidt, P.E.

B. TESTS

1. Test Report No. TEL-05-1007-1, prepared by Testing Evaluation Laboratories, Inc., issued to Silverline Building Products, Inc., dated 10/05/05, Structural Mullion, tested per **ASTM E529** "This test method was applied to determine the flexural characteristic of combinations mullions and reinforced combination mullions whose section modulus properties can not be determine analytically", signed and sealed by Wendell Haney, P.E.
2. Test Report No. TEL-05-1007-2, prepared by Testing Evaluation Laboratories, Inc., issued to Silverline Building Products, Inc., dated 10/05/05, Structural Mullion, tested per **ASTM E529** "This test method was applied to determine the flexural characteristic of combinations mullions and reinforced combination mullions whose section modulus properties can not be determine analytically", signed and sealed by Wendell Haney, P.E.
3. Test Report No. TEL-05-1007-3, prepared by Testing Evaluation Laboratories, Inc., issued to Silverline Building Products, Inc., dated 10/05/05, Structural Mullion, tested per **ASTM E529** "This test method was applied to determine the flexural characteristic of combinations mullions and reinforced combination mullions whose section modulus properties can not be determine analytically", signed and sealed by Wendell Haney, P.E.
4. Test Report No. TEL-05-1007-4, prepared by Testing Evaluation Laboratories, Inc., issued to Silverline Building Products, Inc., dated 10/05/05, Structural Mullion, tested per **ASTM E529** "This test method was applied to determine the flexural characteristic of combinations mullions and reinforced combination mullions whose section modulus properties can not be determine analytically", signed and sealed by Wendell Haney, P.E.
5. Test Report No. TEL-05-1007-5, prepared by Testing Evaluation Laboratories, Inc., issued to Silverline Building Products, Inc., dated 10/05/05, Structural Mullion, tested per **ASTM E529** "This test method was applied to determine the flexural characteristic of combinations mullions and reinforced combination mullions whose section modulus properties can not be determine analytically", signed and sealed by Wendell Haney, P.E.

Jaime D. Gascon, P.E.
Chief, Product Control Division
NOA No 04-1117-04
Expiration Date: April 20, 2011
Approval Date: April 20, 2006

NOTICE OF ACCEPTANCE: EVIDENCE SUBMITTED

C. CALCULATIONS

1. Anchor Calculations and structural analysis, complying with FBC-2004, prepared by R.W. Building Consultants, Inc., dated 12/15/05, signed and sealed by Lyndon F.Schmidt, P.E.

D. QUALITY ASSURANCE

1. Miami Dade Building Code Compliance Office (BCCO

E. MATERIAL CERTIFICATIONS

1. None.

F. STATEMENTS

1. Statement letter of conformance and "no financial interest", dated 11/11/04, signed and sealed by Wendell W. Haney, P.E.

G. OTHER

1. None

Jaime D. Gascon, P.E.
Chief, Product Control Division
NOA No 04-1117-04
Expiration Date: April 20, 2011
Approval Date: April 20, 2006

SilverLINE
BUILDING PRODUCTS CORP.
1 SILVERLINE DRIVE NORTH BRUNSWICK, NJ 08902 PH. 732.435.1000

SILVERLINE STRUCTURAL BEAM MULLION 2723, 2724, 2728, 1537 & 7537

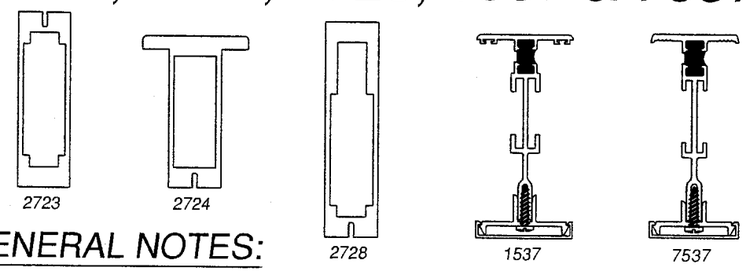

GENERAL NOTES:

1. THIS PRODUCT HAS BEEN EVALUATED AND IS IN COMPLIANCE WITH THE 2004 FLORIDA BUILDING CODE (FBC) INCLUDING THE "HIGH VELOCITY HURRICANE ZONE" (HVHZ).
2. WOOD BUCKS BY OTHERS, MUST BE ANCHORED PROPERLY TO TRANSFER LOADS TO THE STRUCTURE AND BE REVIEWED BY THE BUILDING OFFICIAL.
3. MULLION ANCHOR EMBEDMENT TO BASE MATERIAL SHALL BE BEYOND WALL DRESSING OR STUCCO.
4. SEPARATE PRODUCT APPROVALS FOR EACH GLAZING PRODUCT USED WITH THESE MULLIONS MUST BE SUBMITTED ALONG WITH THIS MULLION PRODUCT APPROVAL.
5. ANCHORING OF EACH GLAZING PRODUCT TO THE MULLION SHALL BE AS SHOWN IN EACH INDIVIDUAL GLAZING PRODUCT APPROVAL.
6. ANY CONDITIONS NOT COVERED IN THIS EVALUATION ARE SUBJECT TO SEPARATE ENGINEERING EVALUATION.
7. APPROVED TWIN UNITS OR APPROVED SINGLES CAN BE USED IN MULLION CONFIGURATIONS. THE VERTICAL AND HORIZONTAL MULLION CONFIGURATIONS CAN BE COMBINED TO MULL MULTIPLE SINGLE UNITS TOGETHER.
8. MULLION DESIGN PRESSURE RATING, SEE LOAD RATING TABLE SHEETS 2 AND 3 OF THIS DRAWING.
9. THE DESIGN PRESSURE RATING OF THE ASSEMBLY SHALL BE THE LESSER OF THE LOAD CAPACITY OF THE MULLION AS DETERMINED USING THIS APPROVAL OR THE DESIGN PRESSURE RATING OF THE INDIVIDUAL GLAZING PRODUCTS USED.
10. BOUNDING BOX DIMENSIONS FOR GEOMETRIC TRANSOM SHAPES MUST BE EQUAL TO OR LESS THAN THE RECTANGULAR TRANSOM DIMENSIONS SHOWN HEREIN.
11. WHEN USED IN AREAS REQUIRING WIND-BORNE DEBRIS PROTECTION THIS PRODUCT IS REQUIRED TO BE PROTECTED WITH AN IMPACT RESISTANT COVERING THAT COMPLIES WITH SECTION 1626 OF THE FLORIDA BUILDING CODE 2004.
12. A LOAD DURATION FACTOR "CD" OF 1.6 HAS BEEN APPLIED IN THE DESIGN OF WOOD ANCHORS ONLY, PER ANSI/NFoPA NDS 2001 (WHERE WOOD LIMITS THE DESIGN).

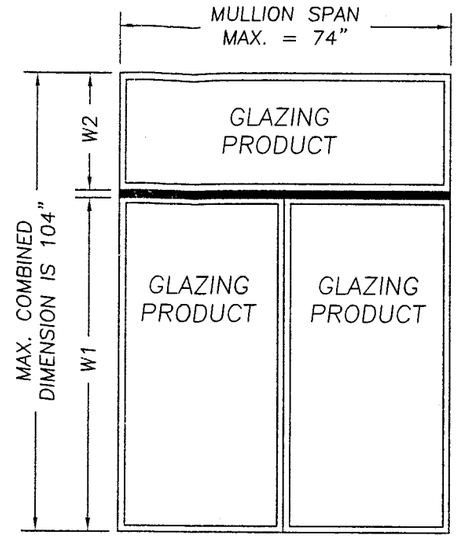

HORIZONTAL MULLION CONFIGURATION

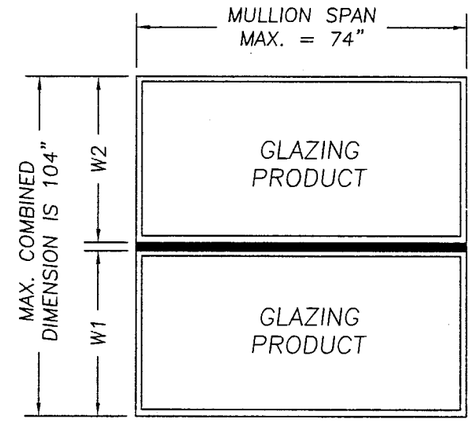

HORIZONTAL MULLION CONFIGURATION

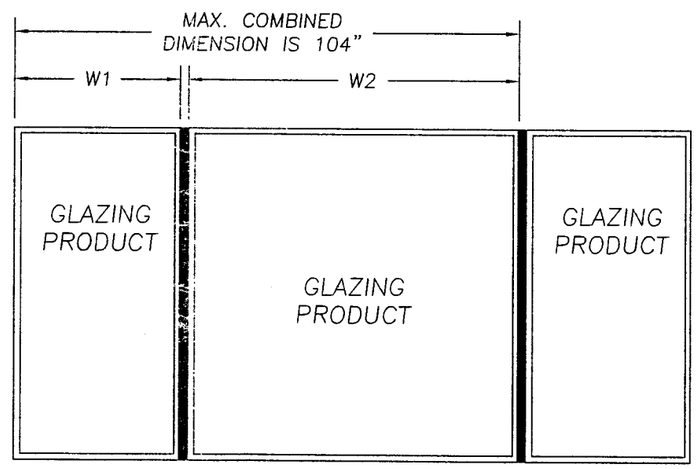

VERTICAL MULLION CONFIGURATION

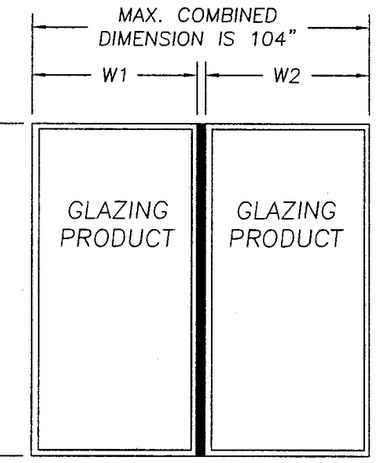

VERTICAL MULLION CONFIGURATION

TYPICAL MULLION CONFIGURATIONS

TABLE OF CONTENTS		TABLE OF CONTENTS	
SHEET #	DESCRIPTION	SHEET #	DESCRIPTION
1	TYPICAL ELEVATIONS, DESIGN PRESSURES AND GENERAL NOTES	9	2728 MULLION LOAD TABLE FOR WOOD SCREW ANCHORING
2	2723 MULLION LOAD TABLE FOR TAPCON ANCHORING	10	2728 MULLION ANCHOR DETAILS AND SECTION DETAILS
3	2723 MULLION LOAD TABLE FOR WOOD SCREW ANCHORING	11	1537 MULLION LOAD TABLE FOR TAPCON ANCHORING
4	2723 MULLION ANCHOR DETAILS AND SECTION DETAILS	12	1537 MULLION LOAD TABLE FOR WOOD SCREW ANCHORING
5	2724 MULLION LOAD TABLE FOR TAPCON ANCHORING	13	1537 MULLION ANCHOR DETAILS AND SECTION DETAILS
6	2724 MULLION LOAD TABLE FOR WOOD SCREW ANCHORING	14	7537 MULLION LOAD TABLE FOR TAPCON ANCHORING
7	2724 MULLION ANCHOR DETAILS AND SECTION DETAILS	15	7537 MULLION LOAD TABLE FOR WOOD SCREW ANCHORING
8	2728 MULLION LOAD TABLE FOR TAPCON ANCHORING	16	7537 MULLION ANCHOR DETAILS AND SECTION DETAILS

Approved as complying with the Florida Building Code
Date 04/20/06
NOA# 04-1117.04
Miami-Dade Product Control Division
By

Documents Prepared By:
RW BUILDING CONSULTANTS, INC.
P.O. Box 230 Valrico FL. 33595
Phone No.: 813.659.9197
Florida Board of Professional Engineers
Certificate Of Authorization No. 9875
Lyndon F. Schmidt, P.E. No. 43409

PRODUCT: STRUCTURAL BEAM MULLIONS FOR USE WITH APPROVED SILVERLINE WINDOWS
PART OR ASSEMBLY: TYPICAL ELEVATION AND GENERAL NOTES

NO.	DATE	REVISIONS	BY
3	12/14/05	REVISED PER DADE LETTER	EW
2	11/10/05	REVISED PER DADE LETTER	EW
1	10/05/05	REVISED PER DADE LETTER	EW

DATE: 11/2/04
SCALE: NTS
DWG. BY: RAH
CHK. BY: LFS
DRAWING NO.: S-2489
SHEET 1 OF 16

\\Rwbcsrv\rwbc\Proj 500 - 650\pf639\S-2489 REV3\S-2489-1.dwg

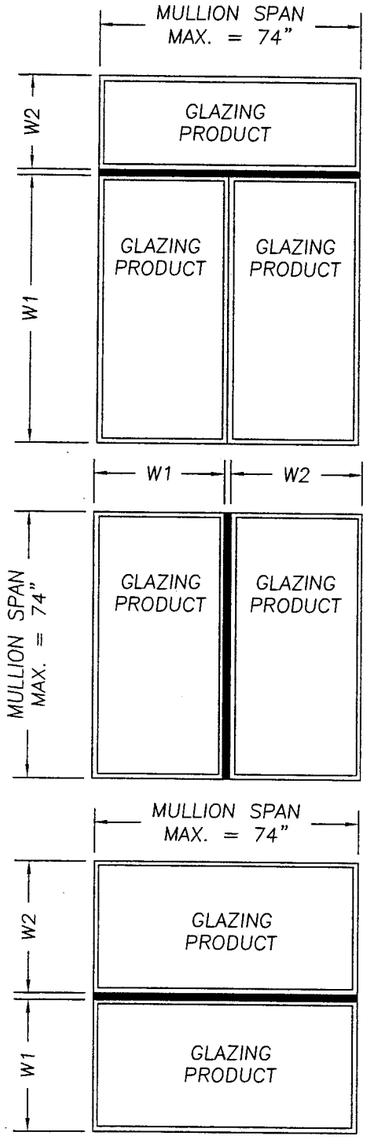

SILVERLINE 2723 STRUCTRUAL BEAM MULLION LOAD TABLE (PSF)

CONCRETE SCREW ANCHORS	TRIBUTARY WIDTH												
MULLION SPAN	28"	30"	32"	34"	36"	38"	40"	42"	44"	46"	48"	50"	52"
74"	64.38	60.09	56.34	53.02	50.08	47.44	45.07	42.92	40.97	39.19	37.56	36.06	34.67
72"	69.90	65.24	61.16	57.56	54.37	51.51	48.93	46.60	44.48	42.55	40.78	39.14	37.64
70"	76.06	70.99	66.56	62.64	59.16	56.05	53.25	50.71	48.40	46.30	44.37	42.60	40.96
68"	82.98	77.44	72.60	68.33	64.54	61.14	58.08	55.32	52.80	50.51	48.40	46.47	44.68
66"	90.75	84.70	79.41	74.73	70.58	66.87	63.52	60.50	57.75	55.24	52.94	50.82	48.87
64"	99.53	92.89	87.08	81.96	77.41	73.33	69.67	66.35	63.33	60.58	58.06	55.73	53.59
62"	109.47	102.17	95.79	90.15	85.14	80.66	76.63	72.98	69.66	66.63	63.86	61.30	58.95
60"	120.79	112.73	105.69	99.47	93.95	89.00	84.55	80.52	76.86	73.52	70.46	67.64	65.04
58"	129.81	121.16	113.59	106.90	100.97	95.65	90.87	86.54	82.61	79.02	75.72	72.70	69.90
56"	134.45	125.49	117.64	110.72	104.57	99.07	94.11	89.63	85.56	81.84	78.43	75.29	72.40
54"	139.43	130.13	122.00	114.82	108.44	102.74	97.60	92.95	88.73	84.87	81.33	78.08	75.08
52"	144.79	135.14	126.69	119.24	112.62	106.69	101.35	96.53	92.14	88.13	84.46	81.08	77.96
50"	150.58	140.54	131.76	124.01	117.12	110.96	105.41	100.39	95.83	91.66	87.84	84.33	81.08
48"	156.86	146.40	137.25	129.18	122.00	115.58	109.80	104.57	99.82	95.48	91.50	87.84	84.46
46"	163.68	152.77	143.22	134.79	127.30	120.60	114.57	109.12	104.16	99.63	95.48	91.66	88.13
44"	171.12	159.71	149.73	140.92	133.09	126.09	119.78	114.08	108.89	104.16	99.82	95.83	92.14
42"	179.27	167.31	156.86	147.63	139.43	132.09	125.49	119.51	114.08	109.12	104.57	100.39	96.53
40"	188.23	175.68	164.70	155.01	146.40	138.69	131.76	125.49	119.78	114.57	109.80	105.41	101.35
38"	198.14	184.93	173.37	163.17	154.11	145.99	138.69	132.09	126.09	120.60	115.58	110.96	106.69
36"	200.00	195.20	183.00	172.24	162.67	154.11	146.40	139.43	133.09	127.30	122.00	117.12	112.62
34"	200.00	200.00	193.76	182.37	172.24	163.17	155.01	147.63	140.92	134.79	129.18	124.01	119.24
32"	200.00	200.00	200.00	193.76	183.00	173.37	164.70	156.86	149.73	143.22	137.25	131.76	126.69
30"	200.00	200.00	200.00	200.00	195.20	184.93	175.68	167.31	159.71	152.77	146.40	140.54	135.14
28"	200.00	200.00	200.00	200.00	200.00	198.14	188.23	179.27	171.12	163.68	156.86	150.58	144.79
26"	200.00	200.00	200.00	200.00	200.00	200.00	200.00	193.05	184.28	176.27	168.92	162.17	155.93
24"	200.00	200.00	200.00	200.00	200.00	200.00	200.00	200.00	199.64	190.96	183.00	175.68	168.92

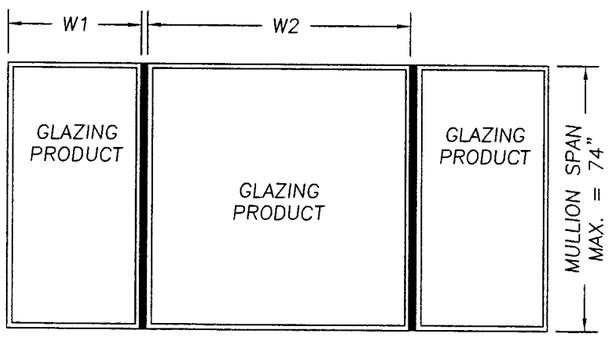

$$\text{TRIBUTARY WIDTH} = \frac{W1 + W2}{2}$$

INSTRUCTIONS FOR USE OF THE MULLION LOAD TABLE:

1. DETERMINE THE DESIGN LOAD REQUIREMENT PER ASCE 7–98 FOR THE PARTICULAR OPENING.
2. FOR THE PARTICULAR OPENING, DETERMINE THE TRIBUTARY WIDTH AND MULLION SPAN. REFERENCE THE SKETCHES ON THIS SHEET FOR MULLION SPAN AND TRIBUTARY WIDTH DETERMINATION.
3. IN THE FIRST COLUMN OF THE TABLE, LOCATE THE MULLION SPAN. IN THE FIRST ROW OF THE TABLE, LOCATE THE TRIBUTARY WIDTH. AT THE INTERSECTION OF THE ROW CONTAINING THE MULLION SPAN AND THE COLUMN CONTAINING THE TRIBUTARY WIDTH, READ THE MULLION LOAD RATING GIVEN IN PSF. THE MULLION LOAD RATING MUST BE EQUAL TO OR GREATER THAN THE DESIGN LOAD REQUIREMENT DETERMINED IN STEP 1 ABOVE.

Approved as complying with the Florida Building Code
Date 04/20/06
NOA# 04-1112.04
Miami Dade Product Control Division
By

Documents Prepared By:
RW BUILDING CONSULTANTS, INC.
P.O. Box 230 Valrico FL. 33595
Phone No.: 813.659.9197
Florida Board of Professional Engineers
Certificate Of Authorization No. 9813
Lyndon F. Schmidt, P.E. No. 43409
12/15/05

PRODUCT: STRUCTURAL BEAM MULLIONS FOR USE WITH APPROVED SILVERLINE WINDOWS

PART OR ASSEMBLY: 2723 MULLION LOAD TABLE, WHEN USING TAPCON ANCHORS

NO.	DATE		BY
3	12/14/05	REVISED PER DADE LETTER	EW
2	11/10/05	REVISED PER DADE LETTER	WH
1	10/05/05	REVISED PER DADE LETTER	EW

REVISIONS

DATE: 11/2/04
SCALE: NTS
DWG. BY: RAH
CHK. BY: LFS
DRAWING NO.: S-2489
SHEET 2 OF 16

\\Rwbcsrv\rwbc\Proj 500 - 650\pf639\S-2489 REV3\S-2489-2.dwg

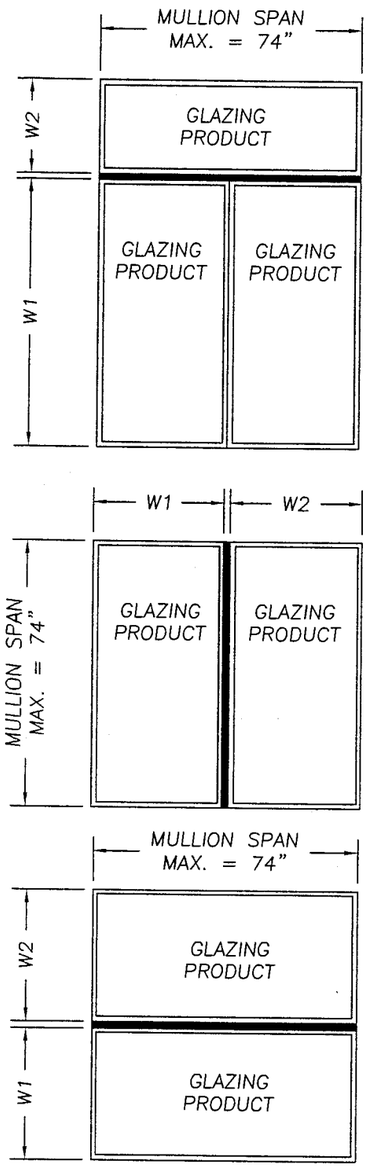

SILVERLINE 2723 STRUCTRUAL BEAM MULLION LOAD TABLE (PSF)

WOOD SCREW ANCHORS	TRIBUTARY WIDTH												
MULLION SPAN	28"	30"	32"	34"	36"	38"	40"	42"	44"	46"	48"	50"	52"
74"	64.38	60.09	56.34	53.02	50.08	47.44	45.07	42.92	40.97	39.19	37.56	36.06	34.67
72"	69.90	65.24	61.16	57.56	54.37	51.51	48.93	46.60	44.48	42.55	40.78	39.14	37.64
70"	76.06	70.99	66.56	62.64	59.16	56.05	53.25	50.71	48.40	46.30	44.37	42.60	40.96
68"	82.98	77.44	72.60	68.33	64.54	61.14	58.08	55.32	52.80	50.51	48.40	46.47	44.68
66"	90.75	84.70	79.41	74.73	70.58	66.87	63.52	60.50	57.75	55.24	52.94	50.82	48.87
64"	99.53	92.89	87.08	81.96	77.41	73.33	69.67	66.35	63.33	60.58	58.06	55.73	53.59
62"	109.47	102.17	95.79	90.15	85.14	80.66	76.63	72.98	69.66	66.63	63.86	61.30	58.95
60"	120.79	112.73	105.69	99.47	93.95	89.00	84.55	80.52	76.86	73.52	70.46	67.64	65.04
58"	133.72	124.80	117.00	110.12	104.00	98.53	93.60	89.15	85.09	81.39	78.00	74.88	72.00
56"	148.56	138.66	129.99	122.35	115.55	109.47	103.99	99.04	94.54	90.43	86.66	83.20	80.00
54"	165.69	154.64	144.98	136.45	128.87	122.09	115.98	110.46	105.44	100.85	96.65	92.79	89.22
52"	180.94	168.88	158.32	149.01	140.73	133.32	126.66	120.63	115.14	110.14	105.55	101.33	97.43
50"	195.70	182.66	171.24	161.17	152.21	144.20	136.99	130.47	124.54	119.12	114.16	109.59	105.38
48"	200.00	198.19	185.81	174.88	165.16	156.47	148.65	141.57	135.13	129.26	123.87	118.92	114.34
46"	200.00	200.00	194.09	182.67	172.52	163.44	155.27	147.88	141.15	135.02	129.39	124.22	119.44
44"	200.00	200.00	200.00	190.97	180.36	170.87	162.33	154.60	147.57	141.15	135.27	129.86	124.87
42"	200.00	200.00	200.00	200.00	188.95	179.01	170.06	161.96	154.60	147.88	141.71	136.05	130.81
40"	200.00	200.00	200.00	200.00	198.40	187.96	178.56	170.06	162.33	155.27	148.80	142.85	137.35
38"	200.00	200.00	200.00	200.00	200.00	197.85	187.96	179.01	170.87	163.44	156.63	150.37	144.58
36"	200.00	200.00	200.00	200.00	200.00	200.00	198.40	188.95	180.36	172.52	165.33	158.72	152.62
34"	200.00	200.00	200.00	200.00	200.00	200.00	200.00	200.00	190.97	182.67	175.06	168.06	161.59
32"	200.00	200.00	200.00	200.00	200.00	200.00	200.00	200.00	200.00	194.09	186.00	178.56	171.69
30"	200.00	200.00	200.00	200.00	200.00	200.00	200.00	200.00	200.00	200.00	198.40	190.46	183.14
28"	200.00	200.00	200.00	200.00	200.00	200.00	200.00	200.00	200.00	200.00	200.00	200.00	196.22
26"	200.00	200.00	200.00	200.00	200.00	200.00	200.00	200.00	200.00	200.00	200.00	200.00	200.00
24"	200.00	200.00	200.00	200.00	200.00	200.00	200.00	200.00	200.00	200.00	200.00	200.00	200.00

$$\text{TRIBUTARY WIDTH} = \frac{W1 + W2}{2}$$

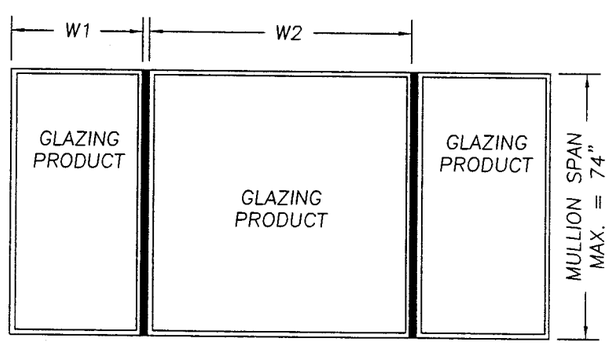

INSTRUCTIONS FOR USE OF THE MULLION LOAD TABLE:

1. DETERMINE THE DESIGN LOAD REQUIREMENT PER ASCE 7-98 FOR THE PARTICULAR OPENING.
2. FOR THE PARTICULAR OPENING, DETERMINE THE TRIBUTARY WIDTH AND MULLION SPAN. REFERENCE THE SKETCHES ON THIS SHEET FOR MULLION SPAN AND TRIBUTARY WIDTH DETERMINATION.
3. IN THE FIRST COLUMN OF THE TABLE, LOCATE THE MULLION SPAN. IN THE FIRST ROW OF THE TABLE, LOCATE THE TRIBUTARY WIDTH. AT THE INTERSECTION OF THE ROW CONTAINING THE MULLION SPAN AND THE COLUMN CONTAINING THE TRIBUTARY WIDTH, READ THE MULLION LOAD RATING GIVEN IN PSF. THE MULLION LOAD RATING MUST BE EQUAL TO OR GREATER THAN THE DESIGN LOAD REQUIREMENT DETERMINED IN STEP 1 ABOVE.

Approved as complying with the Florida Building Code
Date 04/20/06
NOA# 04-1112.04
Miami Dade Product Control Division
By

Documents Prepared By:
RW BUILDING CONSULTANTS, INC.
P.O. Box 230 Valrico FL. 33595
Phone No.: 813.659.9197
Florida Board of Professional Engineers
Certificate Of Authorization No. 3813
Lyndon F. Schmidt, P.E. No. 43409
12/15/05

PRODUCT: STRUCTURAL BEAM MULLIONS FOR USE WITH APPROVED SILVERLINE WINDOWS

PART OR ASSEMBLY: 2723 MULLION LOAD TABLE, WHEN USING WOOD SCREWS

REVISIONS

NO.	DATE		BY
3	12/14/05	REVISED PER DADE LETTER	EW
2	11/10/05	REVISED PER DADE LETTER	WH
1	10/05/05	REVISED PER DADE LETTER	EW

DATE: 11/2/04
SCALE: NTS
DWG. BY: RAH
CHK. BY: LFS
DRAWING NO.: S-2489
SHEET 3 OF 16

\\Rwbcsrv\rwbc\Proj 500 - 650\pf639\S-2489 REV3\S-2489-3.dwg

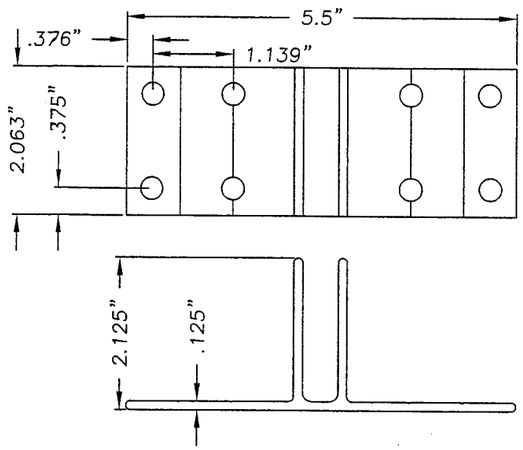

MULLION ANCHOR BRACKET 2722
MAT'S: 6063-T6
FOR #10 WOOD SCREW ANCHORING

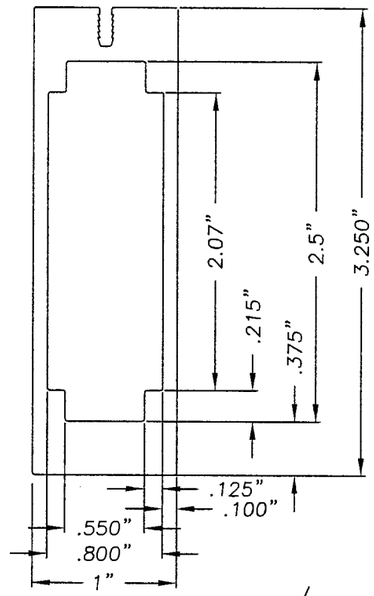

2723 MULLION
MAT'S: 6063-T6

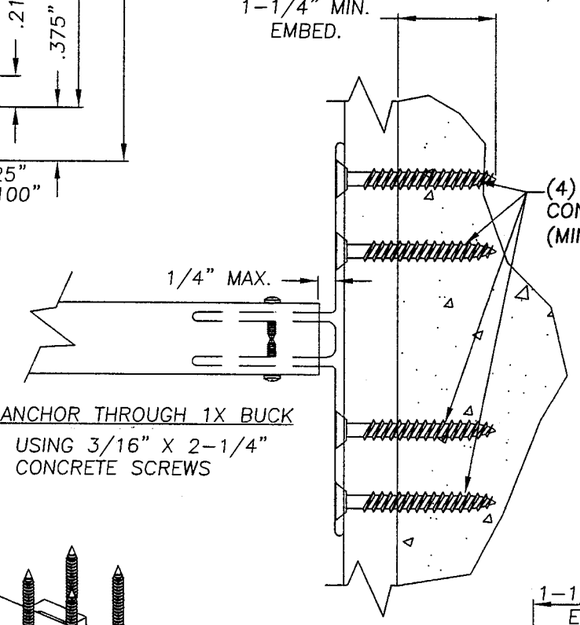

ANCHOR THROUGH 1X BUCK
USING 3/16" X 2-1/4"
CONCRETE SCREWS

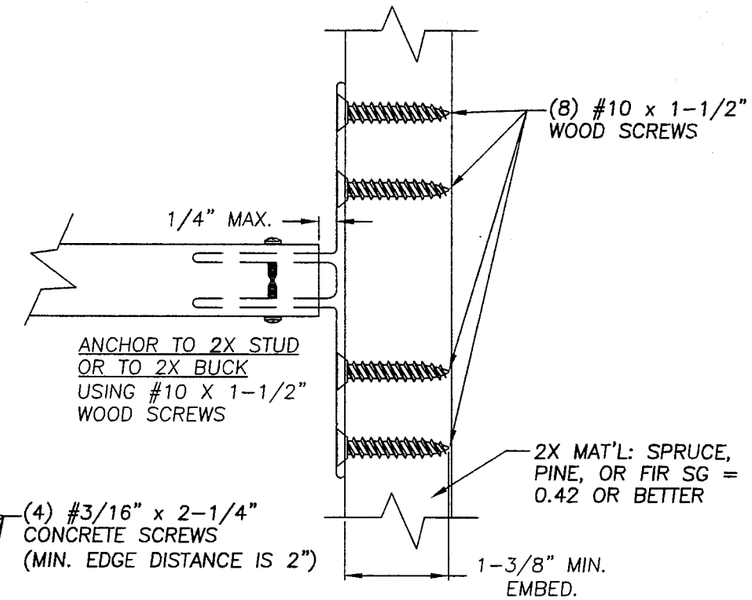

ANCHOR TO 2X STUD
OR TO 2X BUCK
USING #10 X 1-1/2"
WOOD SCREWS

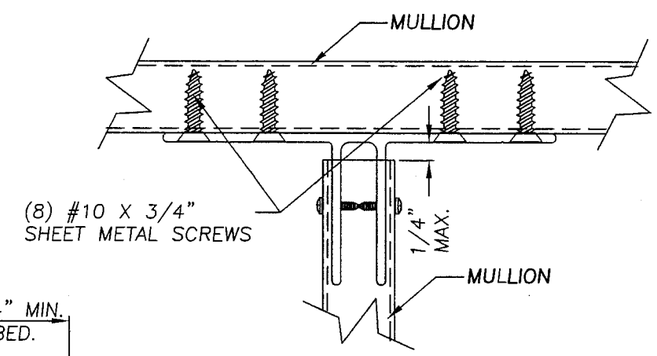

ANCHOR MULLION TO MULLION

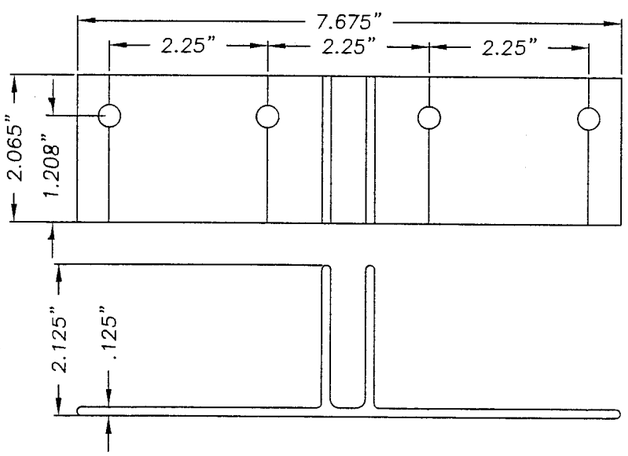

MULLION ANCHOR BRACKET 50-2722
MAT'S: 6063-T6
FOR CONCRETE SCREW ANCHORING

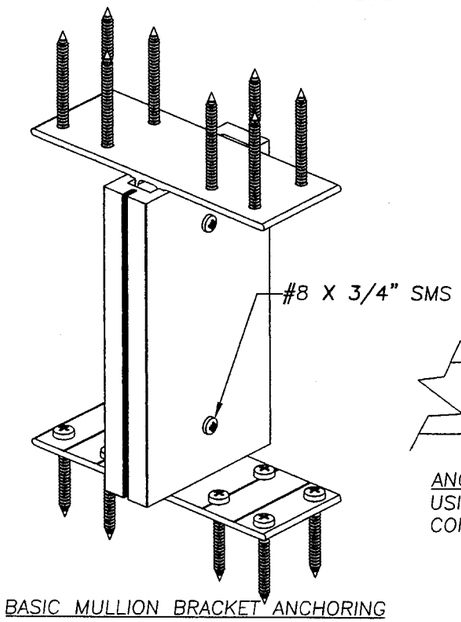

BASIC MULLION BRACKET ANCHORING
2722 BRACKET SHOWN

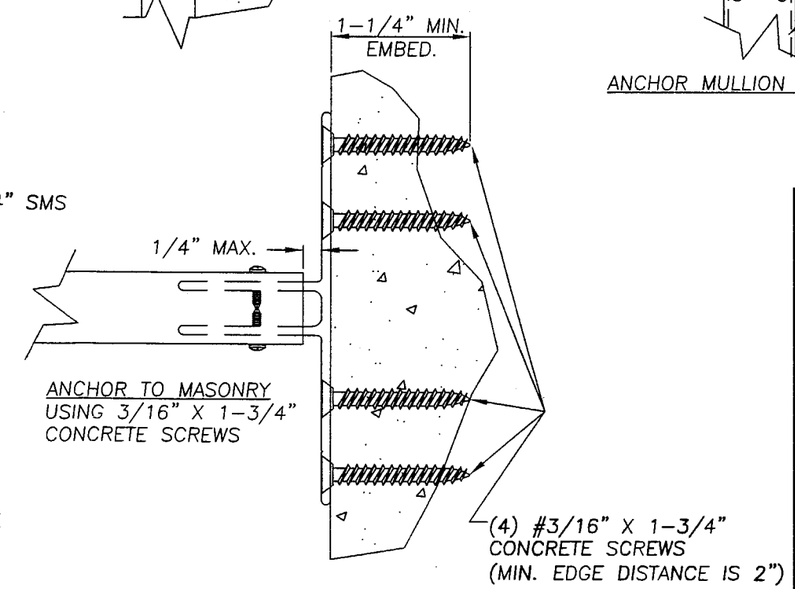

ANCHOR TO MASONRY
USING 3/16" X 1-3/4"
CONCRETE SCREWS

Approved as complying with the Florida Building Code
Date 04/20/06
NOA# 04-1112.04
Miami-Dade Product Control Division
By

Documents Prepared By:
RW BUILDING CONSULTANTS, INC.
P.O. Box 230 Valrico FL. 33595
Phone No.: 813.659.9197
Florida Board of Professional Engineers
Certificate Of Authorization No. 9813
Lyndon F. Schmidt, P.E. No. 43409
12/5/05

PRODUCT:
STRUCTURAL BEAM MULLIONS FOR USE WITH APPROVED SILVER LINE WINDOWS

PART OR ASSEMBLY:
MULLION SECTION DIMENSIONS & ANCHORING DETAILS

NO.	DATE	REVISIONS	BY
3	12/14/05	REVISED PER DADE LETTER	EW
2	11/10/05	REVISED PER DADE LETTER	WH
1	10/05/05	REVISED PER DADE LETTER	EW

DATE:	11/2/04
SCALE:	NT.
DWG. BY:	RAH
CHG.. BY:	LFS
DRAWING NO.:	S-2489
SHEET	4 OF 16

\\Rwbcsrv\rwbc\Proj 500 - 650\pf639\S-2489 REV3\S-2489-4.dwg

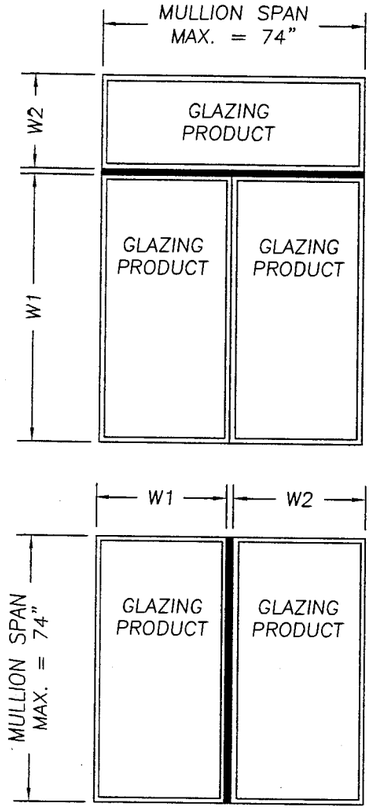

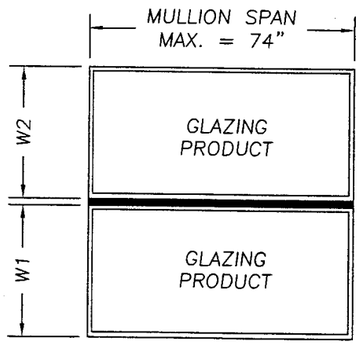

SILVERLINE 2724 STRUCTRUAL BEAM MULLION LOAD TABLE (PSF)

CONCRETE SCREW ANCHORS	TRIBUTARY WIDTH												
MULLION SPAN	28"	30"	32"	34"	36"	38"	40"	42"	44"	46"	48"	50"	52"
74"	52.88	49.36	46.27	43.55	41.13	38.97	37.02	35.26	33.65	32.19	30.85	29.62	28.48
72"	57.41	53.59	50.24	47.28	44.66	42.31	40.19	38.28	36.54	34.95	33.49	32.15	30.92
70"	62.48	58.31	54.67	51.45	48.59	46.04	43.73	41.65	39.76	38.03	36.45	34.99	33.64
68"	68.15	63.61	59.64	56.13	53.01	50.22	47.71	45.44	43.37	41.49	39.76	38.17	36.70
66"	74.54	69.57	65.22	61.39	57.98	54.92	52.18	49.69	47.43	45.37	43.48	41.74	40.14
64"	81.75	76.30	71.53	67.32	63.58	60.24	57.22	54.50	52.02	49.76	47.69	45.78	44.02
62"	89.92	83.92	78.68	74.05	69.94	66.26	62.94	59.95	57.22	54.73	52.45	50.35	48.42
60"	99.21	92.60	86.81	81.70	77.17	73.10	69.45	66.14	63.14	60.39	57.87	55.56	53.42
58"	109.83	102.51	96.10	90.45	85.43	80.93	76.88	73.22	69.89	66.86	64.07	61.51	59.14
56"	122.03	113.89	106.77	100.49	94.91	89.91	85.42	81.35	77.65	74.28	71.18	68.34	65.71
54"	136.09	127.02	119.08	112.08	105.85	100.28	95.27	90.73	86.61	82.84	79.39	76.21	73.28
52"	144.79	135.14	126.69	119.24	112.62	106.69	101.35	96.53	92.14	88.13	84.46	81.08	77.96
50"	150.58	140.54	131.76	124.01	117.12	110.96	105.41	100.39	95.83	91.66	87.84	84.33	81.08
48"	156.86	146.40	137.25	129.18	122.00	115.58	109.80	104.57	99.82	95.48	91.50	87.84	84.46
46"	163.68	152.77	143.22	134.79	127.30	120.60	114.57	109.12	104.16	99.63	95.48	91.66	88.13
44"	171.12	159.71	149.73	140.92	133.09	126.09	119.78	114.08	108.89	104.16	99.82	95.83	92.14
42"	179.27	167.31	156.86	147.63	139.43	132.09	125.49	119.51	114.08	109.12	104.57	100.39	96.53
40"	188.23	175.68	164.70	155.01	146.40	138.69	131.76	125.49	119.78	114.57	109.80	105.41	101.35
38"	198.14	184.93	173.37	163.17	154.11	145.99	138.69	132.09	126.09	120.60	115.58	110.96	106.69
36"	200.00	195.20	183.00	172.24	162.67	154.11	146.40	139.43	133.09	127.30	122.00	117.12	112.62
34"	200.00	200.00	193.76	182.37	172.24	163.17	155.01	147.63	140.92	134.79	129.18	124.01	119.24
32"	200.00	200.00	200.00	193.76	183.00	173.37	164.70	156.86	149.73	143.22	137.25	131.76	126.69
30"	200.00	200.00	200.00	200.00	195.20	184.93	175.68	167.31	159.71	152.77	146.40	140.54	135.14
28"	200.00	200.00	200.00	200.00	200.00	198.14	188.23	179.27	171.12	163.68	156.86	150.58	144.79
26"	200.00	200.00	200.00	200.00	200.00	200.00	200.00	193.05	184.28	176.27	168.92	162.17	155.93
24"	200.00	200.00	200.00	200.00	200.00	200.00	200.00	200.00	199.64	190.96	183.00	175.68	168.92

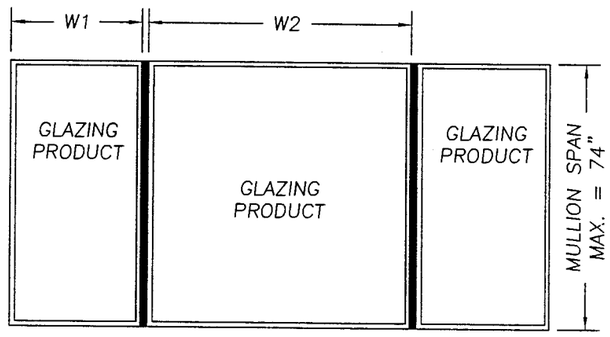

$$\text{TRIBUTARY WIDTH} = \frac{W1 + W2}{2}$$

INSTRUCTIONS FOR USE OF THE MULLION LOAD TABLE:

1. DETERMINE THE DESIGN LOAD REQUIREMENT PER ASCE 7-98 FOR THE PARTICULAR OPENING.
2. FOR THE PARTICULAR OPENING, DETERMINE THE TRIBUTARY WIDTH AND MULLION SPAN. REFERENCE THE SKETCHES ON THIS SHEET FOR MULLION SPAN AND TRIBUTARY WIDTH DETERMINATION.
3. IN THE FIRST COLUMN OF THE TABLE, LOCATE THE MULLION SPAN. IN THE FIRST ROW OF THE TABLE, LOCATE THE TRIBUTARY WIDTH. AT THE INTERSECTION OF THE ROW CONTAINING THE MULLION SPAN AND THE COLUMN CONTAINING THE TRIBUTARY WIDTH, READ THE MULLION LOAD RATING GIVEN IN PSF. THE MULLION LOAD RATING MUST BE EQUAL TO OR GREATER THAN THE DESIGN LOAD REQUIREMENT DETERMINED IN STEP 1 ABOVE.

Approved as complying with the Florida Building Code
Date 04/20/06
NOA# 04-1113.04
Miami-Dade Product Control Division
By

Documents Prepared By:
RW BUILDING CONSULTANTS, INC.
P.O. Box 230 Valrico FL. 33595
Phone No.: 813.659.9197
Florida Board of Professional Engineers
Certificate Of Authorization No. 9813
12/15/05
Lyndon F. Schmidt, P.E. No. 43409

PRODUCT: STRUCTURAL BEAM MULLIONS FOR USE WITH APPROVED SILVERLINE WINDOWS

PART OR ASSEMBLY: 2724 MULLION LOAD TABLE, WHEN USING TAPCON ANCHORS

NO.	DATE	REVISIONS	BY
3	12/14/05	REVISED PER DADE LETTER	EW
2	11/10/05	REVISED PER DADE LETTER	WH
1	10/05/05	REVISED PER DADE LETTER	EW

DATE: 11/2/04
SCALE: NTS
DWG. BY: EW
CHK. BY: LFS
DRAWING NO.: S-2489
SHEET 5 OF 16

\\Rwbcsrv\rwbc\Proj 500 - 650\pf639\S-2489 REV3\S-2489-5.dwg

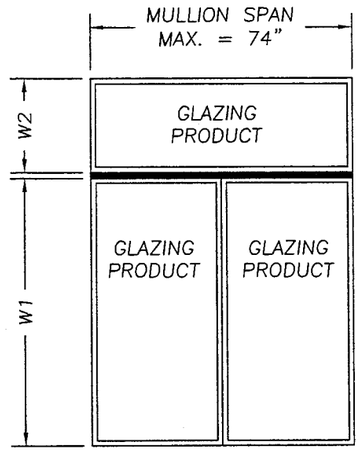

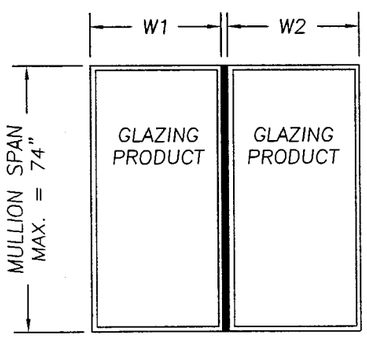

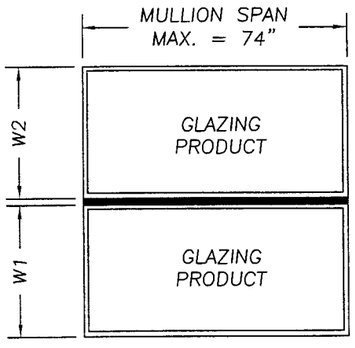

$$\text{TRIBUTARY WIDTH} = \frac{W1 + W2}{2}$$

SILVERLINE 2724 STRUCTRUAL BEAM MULLION LOAD TABLE (PSF)

WOOD SCREW ANCHORS	TRIBUTARY WIDTH												
MULLION SPAN	28"	30"	32"	34"	36"	38"	40"	42"	44"	46"	48"	50"	52"
74"	52.88	49.36	46.27	43.55	41.13	38.97	37.02	35.26	33.65	32.19	30.85	29.62	28.48
72"	57.41	53.59	50.24	47.28	44.66	42.31	40.19	38.28	36.54	34.95	33.49	32.15	30.92
70"	62.48	58.31	54.67	51.45	48.59	46.04	43.73	41.65	39.76	38.03	36.45	34.99	33.64
68"	68.15	63.61	59.64	56.13	53.01	50.22	47.71	45.44	43.37	41.49	39.76	38.17	36.70
66"	74.54	69.57	65.22	61.39	57.98	54.92	52.18	49.69	47.43	45.37	43.48	41.74	40.14
64"	81.75	76.30	71.53	67.32	63.58	60.24	57.22	54.50	52.02	49.76	47.69	45.78	44.02
62"	89.92	83.92	78.68	74.05	69.94	66.26	62.94	59.95	57.22	54.73	52.45	50.35	48.42
60"	99.21	92.60	86.81	81.70	77.17	73.10	69.45	66.14	63.14	60.39	57.87	55.56	53.42
58"	109.83	102.51	96.10	90.45	85.43	80.93	76.88	73.22	69.89	66.86	64.07	61.51	59.14
56"	122.03	113.89	106.77	100.49	94.91	89.91	85.42	81.35	77.65	74.28	71.18	68.34	65.71
54"	136.09	127.02	119.08	112.08	105.85	100.28	95.27	90.73	86.61	82.84	79.39	76.21	73.28
52"	152.41	142.25	133.36	125.51	118.54	112.30	106.69	101.61	96.99	92.77	88.91	85.35	82.07
50"	170.90	159.51	149.54	140.74	132.92	125.93	119.63	113.93	108.75	104.03	99.69	95.70	92.02
48"	185.44	173.08	162.26	152.71	144.23	136.64	129.81	123.63	118.01	112.88	108.17	103.85	99.85
46"	200.00	188.45	176.67	166.28	157.04	148.78	141.34	134.61	128.49	122.90	117.78	113.07	108.72
44"	200.00	200.00	193.10	181.74	171.64	162.61	154.48	147.12	140.44	134.33	128.73	123.58	118.83
42"	200.00	200.00	200.00	199.46	188.38	178.47	169.54	161.47	154.13	147.43	141.29	135.63	130.42
40"	200.00	200.00	200.00	200.00	198.40	187.96	178.56	170.06	162.33	155.27	148.80	142.85	137.35
38"	200.00	200.00	200.00	200.00	200.00	197.85	187.96	179.01	170.87	163.44	156.63	150.37	144.58
36"	200.00	200.00	200.00	200.00	200.00	200.00	198.40	188.95	180.36	172.52	165.33	158.72	152.62
34"	200.00	200.00	200.00	200.00	200.00	200.00	200.00	200.00	190.97	182.67	175.06	168.06	161.59
32"	200.00	200.00	200.00	200.00	200.00	200.00	200.00	200.00	200.00	194.09	186.00	178.56	171.69
30"	200.00	200.00	200.00	200.00	200.00	200.00	200.00	200.00	200.00	200.00	198.40	190.46	183.14
28"	200.00	200.00	200.00	200.00	200.00	200.00	200.00	200.00	200.00	200.00	200.00	200.00	196.22
26"	200.00	200.00	200.00	200.00	200.00	200.00	200.00	200.00	200.00	200.00	200.00	200.00	200.00
24"	200.00	200.00	200.00	200.00	200.00	200.00	200.00	200.00	200.00	200.00	200.00	200.00	200.00

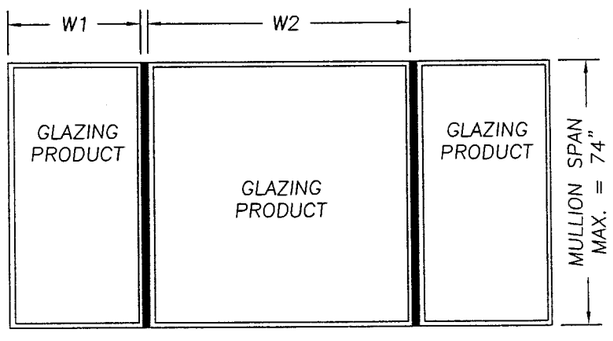

INSTRUCTIONS FOR USE OF THE MULLION LOAD TABLE:

1. DETERMINE THE DESIGN LOAD REQUIREMENT PER ASCE 7–98 FOR THE PARTICULAR OPENING.
2. FOR THE PARTICULAR OPENING, DETERMINE THE TRIBUTARY WIDTH AND MULLION SPAN. REFERENCE THE SKETCHES ON THIS SHEET FOR MULLION SPAN AND TRIBUTARY WIDTH DETERMINATION.
3. IN THE FIRST COLUMN OF THE TABLE, LOCATE THE MULLION SPAN. IN THE FIRST ROW OF THE TABLE, LOCATE THE TRIBUTARY WIDTH. AT THE INTERSECTION OF THE ROW CONTAINING THE MULLION SPAN AND THE COLUMN CONTAINING THE TRIBUTARY WIDTH, READ THE MULLION LOAD RATING GIVEN IN PSF. THE MULLION LOAD RATING MUST BE EQUAL TO OR GREATER THAN THE DESIGN LOAD REQUIREMENT DETERMINED IN STEP 1 ABOVE.

Approved as complying with the Florida Building Code
Date 04/20/06
NOA# 04-1117.04
Miami Dade Product Control Division
By

Documents Prepared By:
BUILDING CONSULTANTS, INC.
P.O. Box 230 Valrico FL. 33595
Phone No.: 813.659.9197
Florida Board of Professional Engineers
Certificate Of Authorization No. 9613
Lyndon F. Schmidt, P.E. No. 43409
12/15/05

PRODUCT: STRUCTURAL BEAM MULLIONS FOR USE WITH APPROVED SILVERLINE WINDOWS

PART OR ASSEMBLY: 2724 MULLION LOAD TABLE, WHEN USING WOOD SCREWS

NO.	DATE		BY
3	12/14/05	REVISED PER DADE LETTER	EW
2	11/10/05	REVISED PER DADE LETTER	WH
1	10/05/05	REVISED PER DADE LETTER	EW

REVISIONS

DATE: 11/2/04
SCALE: NTS
DWG. BY: EW
CHK. BY: LFS
DRAWING NO.: S–2489
SHEET 6 OF 16

\\Rwbcsrv\rwbc\Proj 500 - 650\pf639\S-2489 REV3\S-2489-6.dwg

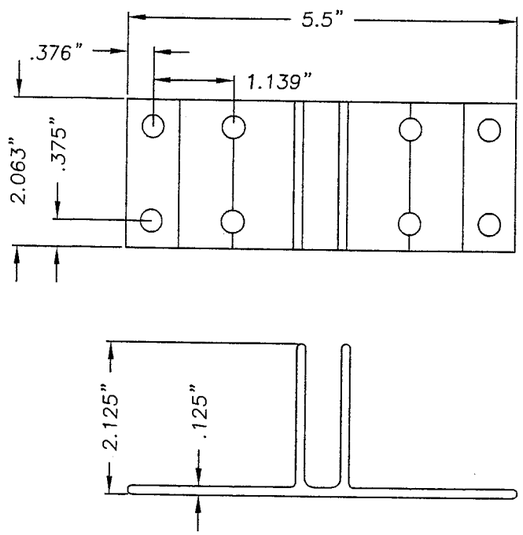

MULLION ANCHOR BRACKET 2722
MAT'S: 6063–T6
FOR #10 WOOD SCREW ANCHORING

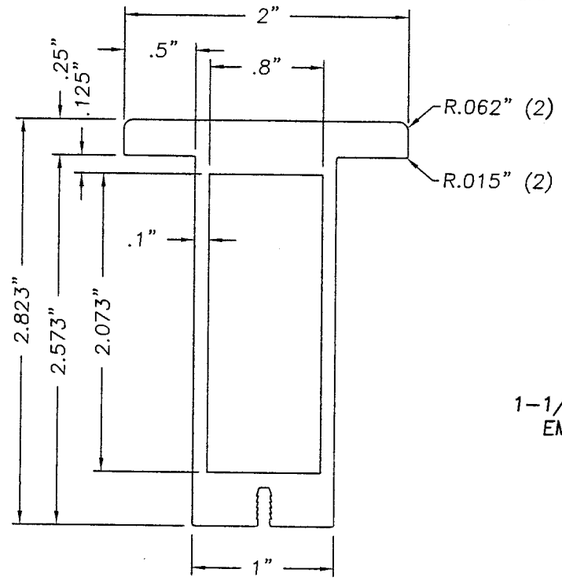

2724 MULLION
MAT'L: 6063 – T6

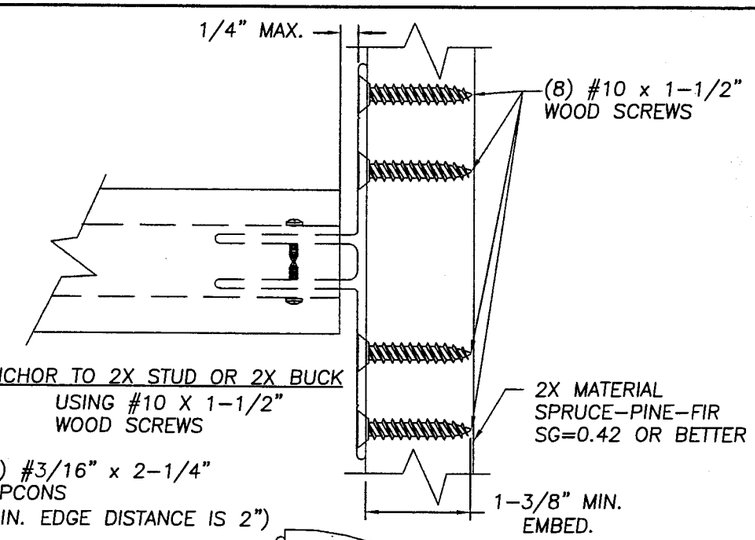

ANCHOR TO 2X STUD OR 2X BUCK
USING #10 X 1–1/2"
WOOD SCREWS

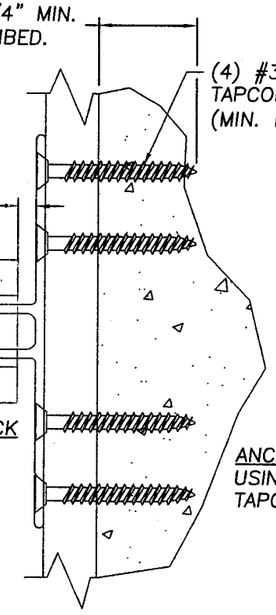

ANCHOR THROUGH 1X BUCK
USING 3/16" X 2–1/4"
TAPCONS

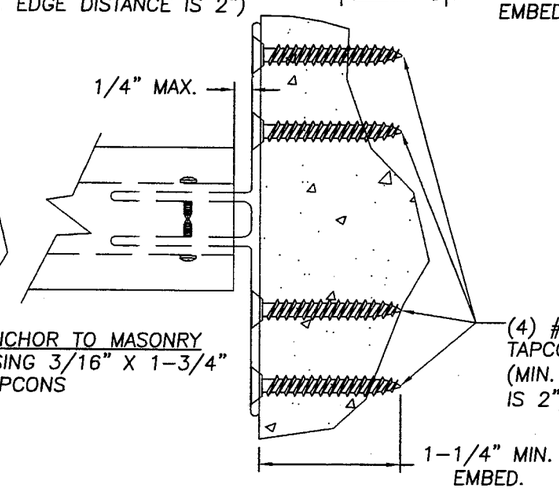

ANCHOR TO MASONRY
USING 3/16" X 1–3/4"
TAPCONS

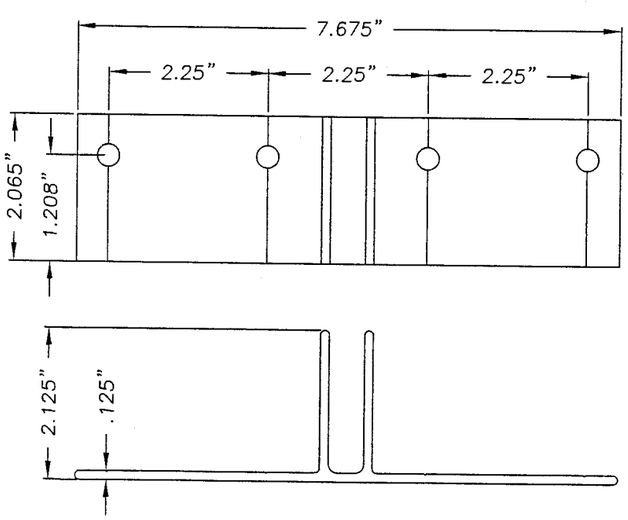

MULLION ANCHOR BRACKET 50–2722
MAT'S: 6063–T6
FOR CONCRETE SCREW ANCHORING

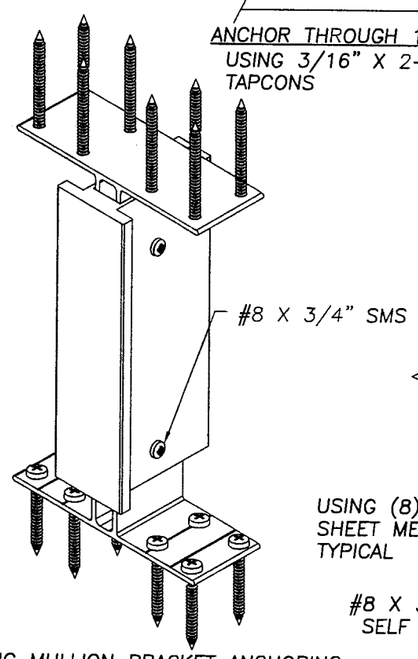

BASIC MULLION BRACKET ANCHORING
2724 BRACKET SHOWN

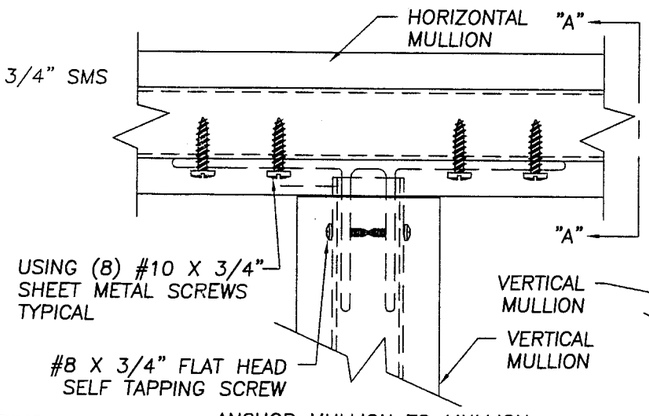

ANCHOR MULLION TO MULLION

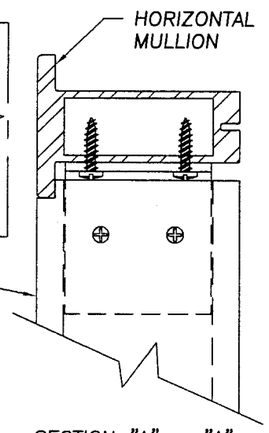

SECTION "A" – "A"

Approved as complying with the Florida Building Code
Date 04/20/06
NOA# 04-1117.04
Miami-Dade Product Control Division
By

Documents Prepared By:
RW BUILDING CONSULTANTS, INC.
P.O. Box 230 Valrico FL. 33595
Phone No.: 813.659.9197
Florida Board of Professional Engineers
Certificate Of Authorization No. 9813
Lyndon F. Schmidt, P.E. No. 43409

PRODUCT: STRUCTURAL BEAM MULLIONS FOR USE WITH APPROVED SILVERLINE WINDOWS

PART OR ASSEMBLY: MULLION SECTION DIMENSIONS & ANCHORING DETAILS

NO.	DATE	REVISIONS	BY
3	12/14/05	REVISED PER DADE LETTER	EW
1	11/10/05	REVISED PER DADE LETTER	EW
1	10/05/05	REVISED PER DADE LETTER	EW

DATE: 11/2/04
SCALE: NTS
DWG. BY: EW
CHK. BY: LFS
DRAWING NO.: S–2489
SHEET 7 OF 16

\\Rwbcsrv\rwbc\Proj 500 - 650\pf6391S-2489 REV3\S-2489-7.dwg

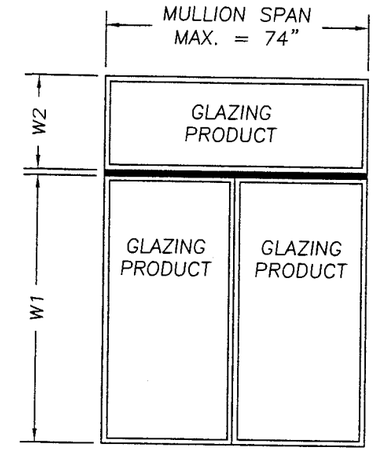

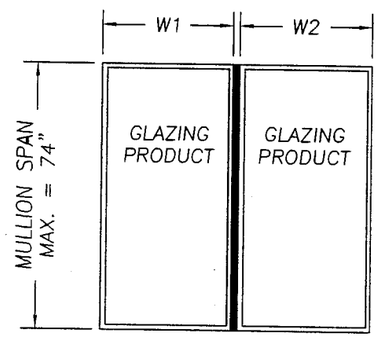

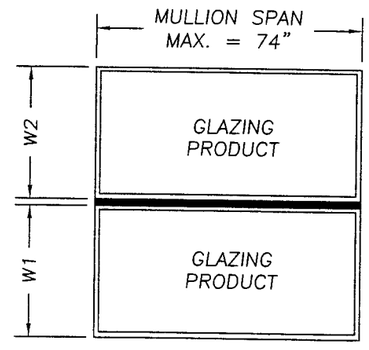

$$\text{TRIBUTARY WIDTH} = \frac{W1 + W2}{2}$$

SILVERLINE 2728 STRUCTRUAL BEAM MULLION LOAD TABLE (PSF)

CONCRETE SCREW ANCHORS	TRIBUTARY WIDTH												
MULLION SPAN	28"	30"	32"	34"	36"	38"	40"	42"	44"	46"	48"	50"	52"
74"	101.75	94.96	89.03	83.79	79.14	74.97	71.22	67.83	64.75	61.93	59.35	56.98	54.79
72"	104.57	97.60	91.50	86.12	81.33	77.05	73.20	69.71	66.55	63.65	61.00	58.56	56.31
70"	107.56	100.39	94.11	88.58	83.66	79.25	75.29	71.71	68.45	65.47	62.74	60.23	57.92
68"	110.72	103.34	96.88	91.18	86.12	81.59	77.51	73.82	70.46	67.40	64.59	62.00	59.62
66"	114.08	106.47	99.82	93.95	88.73	84.06	79.85	76.05	72.60	69.44	66.55	63.88	61.43
64"	117.64	109.80	102.94	96.88	91.50	86.68	82.35	78.43	74.86	71.61	68.63	65.88	63.35
62"	121.44	113.34	106.26	100.01	94.45	89.48	85.01	80.96	77.28	73.92	70.84	68.01	65.39
60"	125.49	117.12	109.80	103.34	97.60	92.46	87.84	83.66	79.85	76.38	73.20	70.27	67.57
58"	129.81	121.16	113.59	106.90	100.97	95.65	90.87	86.54	82.61	79.02	75.72	72.70	69.90
56"	134.45	125.49	117.64	110.72	104.57	99.07	94.11	89.63	85.56	81.84	78.43	75.29	72.40
54"	139.43	130.13	122.00	114.82	108.44	102.74	97.60	92.95	88.73	84.87	81.33	78.08	75.08
52"	144.79	135.14	126.69	119.24	112.62	106.69	101.35	96.53	92.14	88.13	84.46	81.08	77.96
50"	150.58	140.54	131.76	124.01	117.12	110.96	105.41	100.39	95.83	91.66	87.84	84.33	81.08
48"	156.86	146.40	137.25	129.18	122.00	115.58	109.80	104.57	99.82	95.48	91.50	87.84	84.46
46"	163.68	152.77	143.22	134.79	127.30	120.60	114.57	109.12	104.16	99.63	95.48	91.66	88.13
44"	171.12	159.71	149.73	140.92	133.09	126.09	119.78	114.08	108.89	104.16	99.82	95.83	92.14
42"	179.27	167.31	156.86	147.63	139.43	132.09	125.49	119.51	114.08	109.12	104.57	100.39	96.53
40"	188.23	175.68	164.70	155.01	146.40	138.69	131.76	125.49	119.78	114.57	109.80	105.41	101.35
38"	198.14	184.93	173.37	163.17	154.11	145.99	138.69	132.09	126.09	120.60	115.58	110.96	106.69
36"	209.14	195.20	183.00	172.24	162.67	154.11	146.40	139.43	133.09	127.30	122.00	117.12	112.62
34"	221.45	206.68	193.76	182.37	172.24	163.17	155.01	147.63	140.92	134.79	129.18	124.01	119.24
32"	235.29	219.60	205.88	193.76	183.00	173.37	164.70	156.86	149.73	143.22	137.25	131.76	126.69
30"	250.97	234.24	219.60	206.68	195.20	184.93	175.68	167.31	159.71	152.77	146.40	140.54	135.14
28"	268.90	250.97	235.29	221.45	209.14	198.14	188.23	179.27	171.12	163.68	156.86	150.58	144.79
26"	289.58	270.28	253.38	238.48	225.23	213.38	202.71	193.05	184.28	176.27	168.92	162.17	155.93
24"	300.00	292.80	274.50	258.35	244.00	231.16	219.60	209.14	199.64	190.96	183.00	175.68	168.92

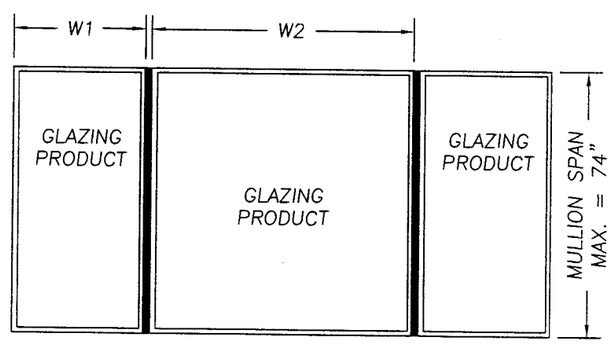

INSTRUCTIONS FOR USE OF THE MULLION LOAD TABLE:

1. DETERMINE THE DESIGN LOAD REQUIREMENT PER ASCE 7-98 FOR THE PARTICULAR OPENING.
2. FOR THE PARTICULAR OPENING, DETERMINE THE TRIBUTARY WIDTH AND MULLION SPAN. REFERENCE THE SKETCHES ON THIS SHEET FOR MULLION SPAN AND TRIBUTARY WIDTH DETERMINATION.
3. IN THE FIRST COLUMN OF THE TABLE, LOCATE THE MULLION SPAN. IN THE FIRST ROW OF THE TABLE, LOCATE THE TRIBUTARY WIDTH. AT THE INTERSECTION OF THE ROW CONTAINING THE MULLION SPAN AND THE COLUMN CONTAINING THE TRIBUTARY WIDTH, READ THE MULLION LOAD RATING GIVEN IN PSF. THE MULLION LOAD RATING MUST BE EQUAL TO OR GREATER THAN THE DESIGN LOAD REQUIREMENT DETERMINED IN STEP 1 ABOVE.

Approved as complying with the Florida Building Code
Date 04/20/06
NOA# 04-1117.04
Miami Dade Product Control Division
By

Documents Prepared By:
RW BUILDING CONSULTANTS, INC.
P.O. Box 230 Valrico FL. 33595
Phone No.: 813.659.9197
Florida Board of Professional Engineers
Certificate Of Authorization No. 9873
Lyndon F. Schmidt, P.E. No. 43409

PRODUCT: STRUCTURAL BEAM MULLIONS FOR USE WITH APPROVED SILVERLINE WINDOWS

PART OR ASSEMBLY: 2728 MULLION LOAD TABLE, WHEN USING TAPCON ANCHORS

REVISIONS

NO.	DATE		BY
3	12/14/05	REVISED PER DADE LETTER	EW
2	11/10/05	REVISED PER DADE LETTER	WH
1	10/05/05	REVISED PER DADE LETTER	EW

DATE: 11/2/04
SCALE: NTS
DWG. BY: RAH
CHK. BY: LFS
DRAWING NO.: S-2489
SHEET 8 OF 16

\\Rwbcsrv\rwbc\Proj 500 - 650\pf639\S-2489 REV3\S-2489-8.dwg

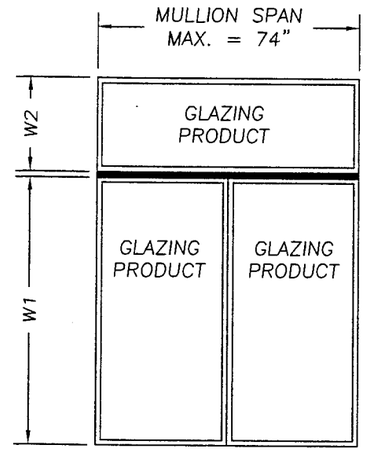

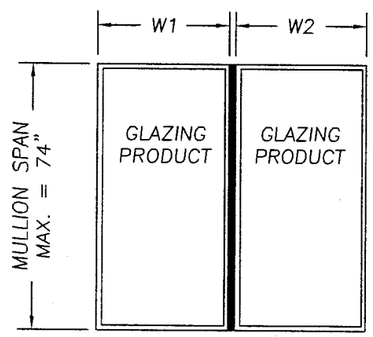

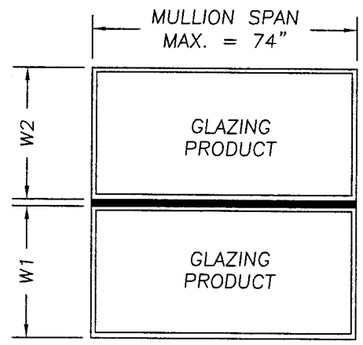

$$\text{TRIBUTARY WIDTH} = \frac{W1 + W2}{2}$$

SILVERLINE 2728 STRUCTRUAL BEAM MULLION LOAD TABLE (PSF)

WOOD SCREW ANCHORS	TRIBUTARY WIDTH												
MULLION SPAN	28"	30"	32"	34"	36"	38"	40"	42"	44"	46"	48"	50"	52"
74"	114.38	106.76	100.08	94.20	88.96	84.28	80.07	76.25	72.79	69.62	66.72	64.05	61.59
72"	124.18	115.90	108.66	102.27	96.58	91.50	86.93	82.79	79.02	75.59	72.44	69.54	66.87
70"	135.13	126.12	118.24	111.28	105.10	99.57	94.59	90.09	85.99	82.25	78.83	75.67	72.76
68"	144.91	135.25	126.80	119.34	112.71	106.78	101.44	96.61	92.22	88.21	84.53	81.15	78.03
66"	153.83	143.57	134.60	126.68	119.65	113.35	107.68	102.55	97.89	93.64	89.73	86.14	82.83
64"	163.59	152.69	143.14	134.72	127.24	120.54	114.52	109.06	104.11	99.58	95.43	91.61	88.09
62"	174.32	162.70	152.53	143.56	135.58	128.45	122.02	116.21	110.93	106.11	101.69	97.62	93.86
60"	186.13	173.72	162.87	153.29	144.77	137.15	130.29	124.09	118.45	113.30	108.58	104.23	100.23
58"	199.19	185.91	174.29	164.04	154.93	146.77	139.43	132.79	126.76	121.25	116.20	111.55	107.26
56"	213.67	199.43	186.96	175.97	166.19	157.44	149.57	142.45	135.97	130.06	124.64	119.66	115.06
54"	229.79	214.48	201.07	189.24	178.73	169.32	160.86	153.20	146.23	139.88	134.05	128.69	123.74
52"	247.81	231.29	216.83	204.08	192.74	182.60	173.47	165.21	157.70	150.84	144.56	138.77	133.44
50"	268.03	250.16	234.53	220.73	208.47	197.50	187.62	178.69	170.57	163.15	156.35	150.10	144.33
48"	290.83	271.44	254.48	239.51	226.20	214.30	203.58	193.89	185.08	177.03	169.65	162.87	156.60
46"	300.00	295.56	277.09	260.79	246.30	233.34	221.67	211.12	201.52	192.76	184.73	177.34	170.52
44"	300.00	300.00	300.00	285.04	269.20	255.03	242.28	230.74	220.26	210.68	201.90	193.83	186.37
42"	300.00	300.00	300.00	300.00	295.45	279.90	265.91	253.24	241.73	231.22	221.59	212.72	204.54
40"	300.00	300.00	300.00	300.00	300.00	300.00	293.16	279.20	266.51	254.92	244.30	234.53	225.51
38"	300.00	300.00	300.00	300.00	300.00	300.00	300.00	300.00	295.30	282.46	270.69	259.87	249.87
36"	300.00	300.00	300.00	300.00	300.00	300.00	300.00	300.00	300.00	300.00	300.00	289.54	278.41
34"	300.00	300.00	300.00	300.00	300.00	300.00	300.00	300.00	300.00	300.00	300.00	300.00	299.08
32"	300.00	300.00	300.00	300.00	300.00	300.00	300.00	300.00	300.00	300.00	300.00	300.00	300.00
30"	300.00	300.00	300.00	300.00	300.00	300.00	300.00	300.00	300.00	300.00	300.00	300.00	300.00
28"	300.00	300.00	300.00	300.00	300.00	300.00	300.00	300.00	300.00	300.00	300.00	300.00	300.00
26"	300.00	300.00	300.00	300.00	300.00	300.00	300.00	300.00	300.00	300.00	300.00	300.00	300.00
24"	300.00	300.00	300.00	300.00	300.00	300.00	300.00	300.00	300.00	300.00	300.00	300.00	300.00

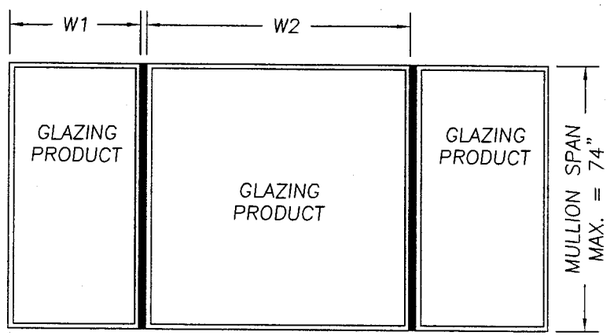

INSTRUCTIONS FOR USE OF THE MULLION LOAD TABLE:

1. DETERMINE THE DESIGN LOAD REQUIREMENT PER ASCE 7–98 FOR THE PARTICULAR OPENING.
2. FOR THE PARTICULAR OPENING, DETERMINE THE TRIBUTARY WIDTH AND MULLION SPAN. REFERENCE THE SKETCHES ON THIS SHEET FOR MULLION SPAN AND TRIBUTARY WIDTH DETERMINATION.
3. IN THE FIRST COLUMN OF THE TABLE, LOCATE THE MULLION SPAN. IN THE FIRST ROW OF THE TABLE, LOCATE THE TRIBUTARY WIDTH. AT THE INTERSECTION OF THE ROW CONTAINING THE MULLION SPAN AND THE COLUMN CONTAINING THE TRIBUTARY WIDTH, READ THE MULLION LOAD RATING GIVEN IN PSF. THE MULLION LOAD RATING MUST BE EQUAL TO OR GREATER THAN THE DESIGN LOAD REQUIREMENT DETERMINED IN STEP 1 ABOVE.

Approved as complying with the Florida Building Code
Date 04/20/06
NOA# 04-1113.04
Miami-Dade Product Control Division
By

Documents Prepared By:
RW BUILDING CONSULTANTS, INC.
P.O. Box 230 Valrico FL. 33595
Phone No.: 813.659.9197
Florida Board of Professional Engineers
Certificate Of Authorization No. 9813
Lyndon F. Schmidt, P.E. No. 43409

PRODUCT: STRUCTURAL BEAM MULLIONS FOR USE WITH APPROVED SILVERLINE WINDOWS

PART OR ASSEMBLY: 2728 MULLION LOAD TABLE, WHEN USING WOOD SCREWS

NO.	DATE	REVISIONS	BY
3	12/14/05	REVISED PER DADE LETTER	EW
2	11/10/05	REVISED PER DADE LETTER	WH
1	10/05/05	REVISED PER DADE LETTER	EW

DATE: 11/2/04
SCALE: NTS
DWG. BY: RAH
CHK. BY: LFS
DRAWING NO.: S-2489
SHEET 9 OF 16

\\Rwbcsrv\rwbc\Proj 500 - 650\pf639\S-2489 REV3\S-2489-9.dwg

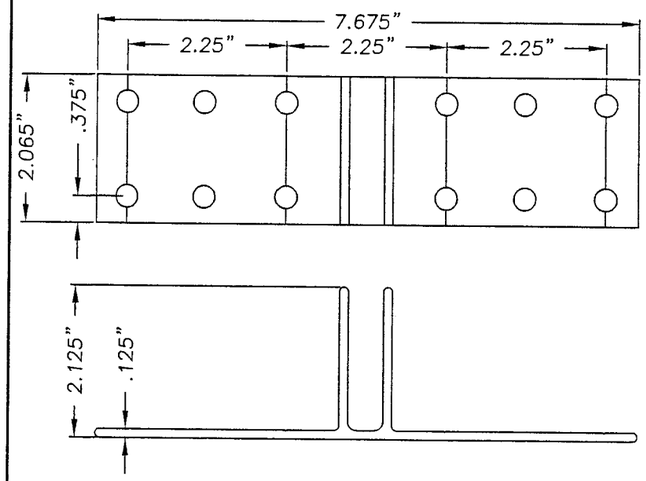

MULLION ANCHOR BRACKET 2728
MAT'S: 6063-T6
FOR #12 WOOD SCREW ANCHORING

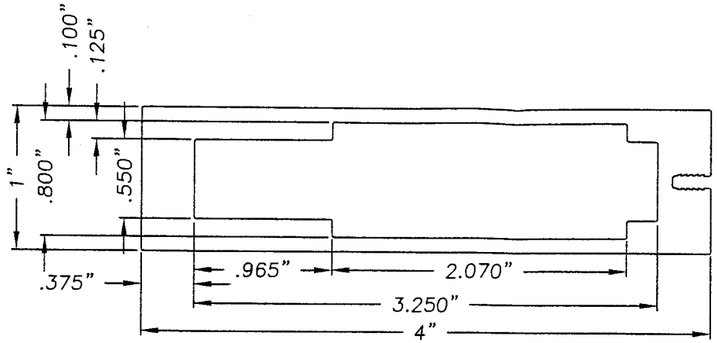

2728 MULLION
MAT'S: 6063-T6

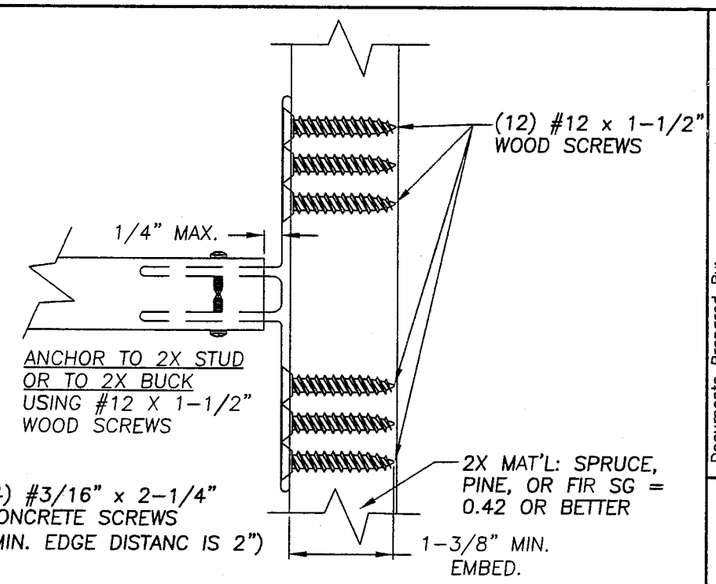

ANCHOR TO 2X STUD
OR TO 2X BUCK
USING #12 X 1-1/2"
WOOD SCREWS

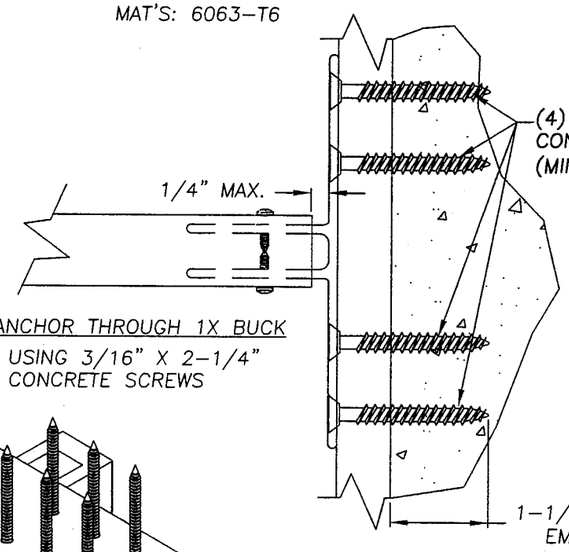

ANCHOR THROUGH 1X BUCK
USING 3/16" X 2-1/4"
CONCRETE SCREWS

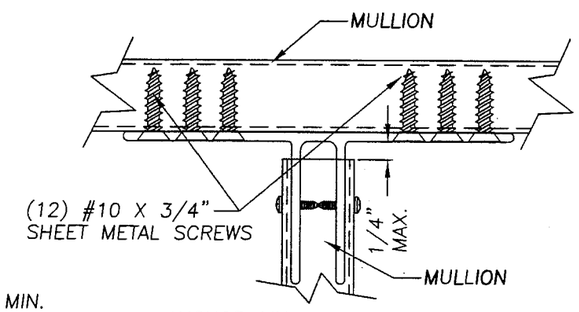

ANCHOR MULLION TO MULLION

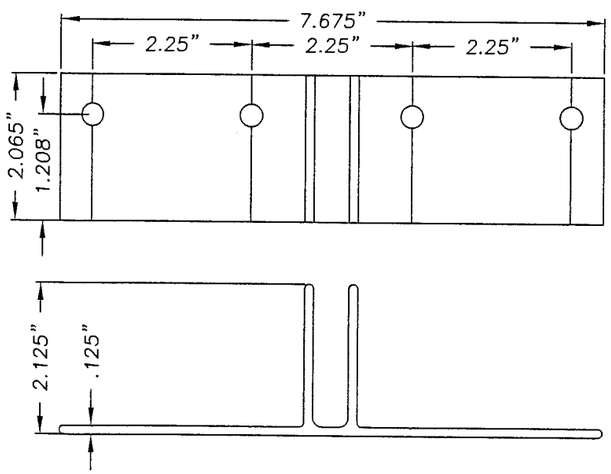

MULLION ANCHOR BRACKET 50-2728
MAT'S: 6063-T6
FOR CONCRETE SCREW ANCHORING

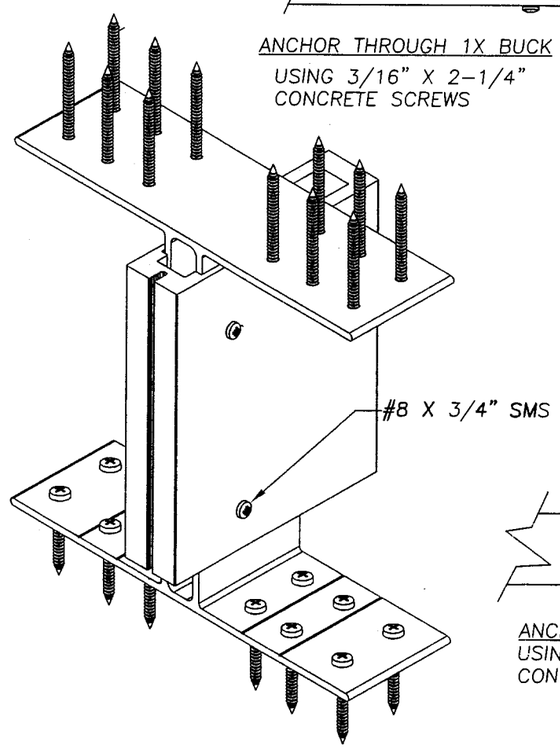

BASIC MULLION BRACKET ANCHORING
50-2722 BRACKET SHOWN WITH
WOOD SCREW LAYOUT

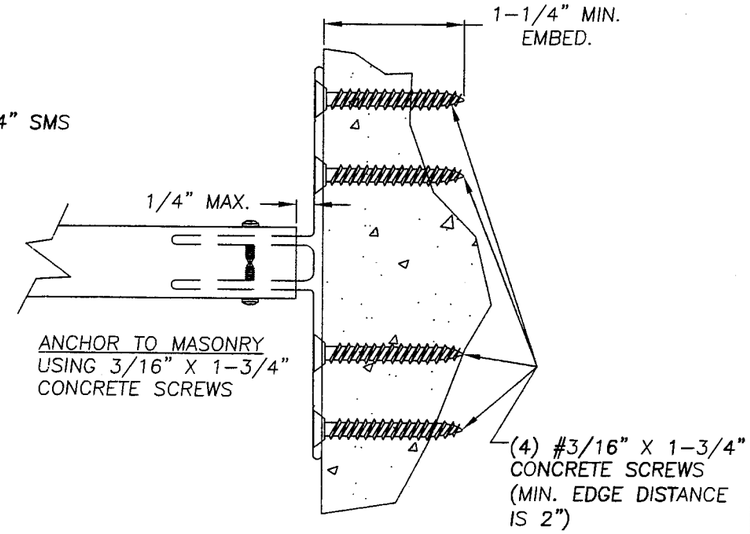

ANCHOR TO MASONRY
USING 3/16" X 1-3/4"
CONCRETE SCREWS

Approved as complying with the Florida Building Code
Date 04/20/06
NOA# 04-1113.04
Miami Dade Product Control Division
By

Documents Prepared By:
RW BUILDING CONSULTANTS, INC.
P.O. Box 230 Valrico FL. 33595
Phone No.: 813.659.9197
Florida Board of Professional Engineers
Certificate Of Authorization No. 9813
Lyndon F. Schmidt, P.E. No. 43409
12-15-05

PRODUCT: STRUCTURAL BEAM MULLIONS FOR USE WITH APPROVED SILVER LINE WINDOWS

PART OR ASSEMBLY: MULLION SECTION DIMENSIONS & ANCHORING DETAILS

NO.	DATE	REVISIONS	BY
3	12/14/05	REVISED PER DADE LETTER	EW
2	11/10/05	REVISED PER DADE LETTER	WH
1	10/05/05	REVISED PER DADE LETTER	EW

DATE: 11/2/04
SCALE: NTS
DWG. BY: RAH
CHG.. BY: LFS
DRAWING NO.: S-2489
SHEET 10 OF 16

\\Rwbcsrv\rwbc\Proj 500 - 650\pf639\S-2489 REV3\S-2489-10.dwg

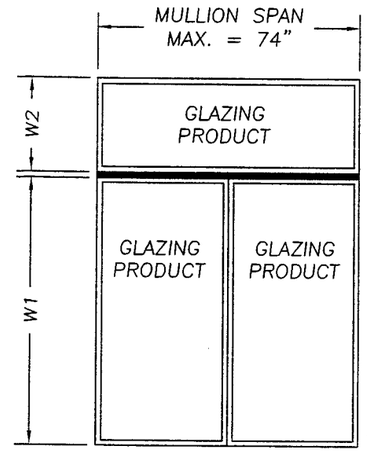

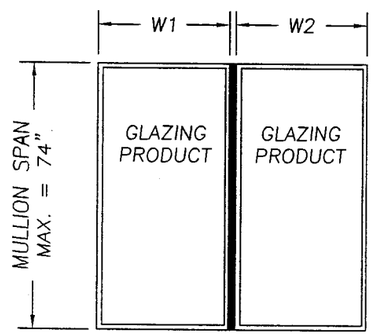

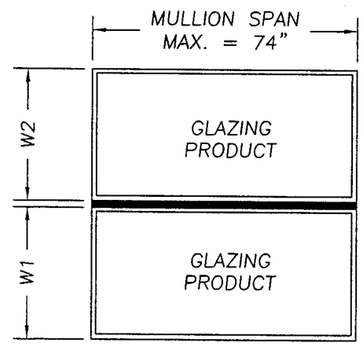

$$\text{TRIBUTARY WIDTH} = \frac{W1 + W2}{2}$$

SILVERLINE 1537 STRUCTRUAL BEAM MULLION LOAD TABLE (PSF)

CONCRETE SCREW ANCHORS	TRIBUTARY WIDTH												
MULLION SPAN	28"	30"	32"	34"	36"	38"	40"	42"	44"	46"	48"	50"	52"
74"	32.80	30.61	28.70	27.01	25.51	**	**	**	**	**	**	**	**
72"	35.61	33.23	31.16	29.32	27.69	26.24	**	**	**	**	**	**	**
70"	38.75	36.16	33.90	31.91	30.14	28.55	27.12	25.83	**	**	**	**	**
68"	42.27	39.45	36.98	34.81	32.88	31.15	29.59	28.18	26.90	25.73	**	**	**
66"	46.23	43.15	40.45	38.07	35.96	34.06	32.36	30.82	29.42	28.14	26.97	25.89	**
64"	50.70	47.32	44.36	41.75	39.43	37.36	35.49	33.80	32.26	30.86	29.57	28.39	27.30
62"	55.77	52.05	48.79	45.92	43.37	41.09	39.04	37.18	35.49	33.94	32.53	31.23	30.03
60"	61.53	57.43	53.84	50.67	47.86	45.34	43.07	41.02	39.16	37.45	35.89	34.46	33.13
58"	66.16	61.75	57.89	54.48	51.45	48.75	46.31	44.10	42.10	40.27	38.59	37.05	35.62
56"	70.97	66.23	62.10	58.44	55.20	52.29	49.68	47.31	45.16	43.20	41.40	39.74	38.21
54"	76.32	71.23	66.78	62.85	59.36	56.24	53.42	50.88	48.57	46.46	44.52	42.74	41.10
52"	82.30	76.82	72.02	67.78	64.01	60.64	57.61	54.87	52.38	50.10	48.01	46.09	44.32
50"	89.02	83.09	77.89	73.31	69.24	65.59	62.31	59.35	56.65	54.19	51.93	49.85	47.93
48"	96.59	90.15	84.52	79.55	75.13	71.17	67.61	64.40	61.47	58.80	56.35	54.09	52.01
46"	105.17	98.16	92.03	86.61	81.80	77.50	73.62	70.12	66.93	64.02	61.35	58.90	56.63
44"	114.95	107.29	100.58	94.67	89.41	84.70	80.47	76.64	73.15	69.97	67.06	64.37	61.90
42"	126.16	117.75	110.39	103.90	98.13	92.96	88.31	84.11	80.28	76.79	73.59	70.65	67.93
40"	139.09	129.82	121.71	114.55	108.18	102.49	97.37	92.73	88.51	84.67	81.14	77.89	74.90
38"	154.12	143.85	134.86	126.92	119.87	113.56	107.88	102.75	98.08	93.81	89.90	86.31	82.99
36"	171.72	160.27	150.26	141.42	133.56	126.53	120.20	114.48	109.28	104.53	100.17	96.16	92.46
34"	192.52	179.68	168.45	158.54	149.74	141.85	134.76	128.34	122.51	117.18	112.30	107.81	103.66
32"	200.00	200.00	190.17	178.98	169.04	160.14	152.13	144.89	138.30	132.29	126.78	121.71	117.03
30"	200.00	200.00	200.00	200.00	192.33	182.20	173.09	164.85	157.36	150.52	144.25	138.48	133.15
28"	200.00	200.00	200.00	200.00	200.00	198.14	188.23	179.27	171.12	163.68	156.86	150.58	144.79
26"	200.00	200.00	200.00	200.00	200.00	200.00	200.00	193.05	184.28	176.27	168.92	162.17	155.93
24"	200.00	200.00	200.00	200.00	200.00	200.00	200.00	200.00	199.64	190.96	183.00	175.68	168.92

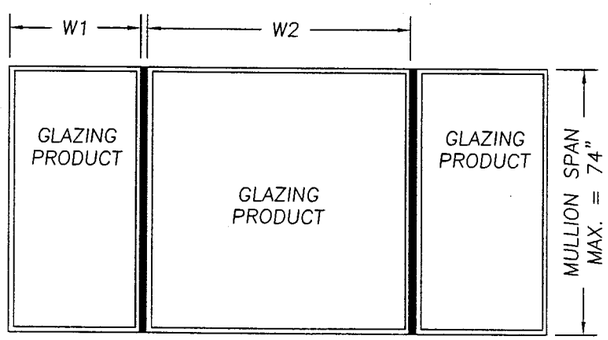

INSTRUCTIONS FOR USE OF THE MULLION LOAD TABLE:

1. DETERMINE THE DESIGN LOAD REQUIREMENT PER ASCE 7-98 FOR THE PARTICULAR OPENING.
2. FOR THE PARTICULAR OPENING, DETERMINE THE TRIBUTARY WIDTH AND MULLION SPAN. REFERENCE THE SKETCHES ON THIS SHEET FOR MULLION SPAN AND TRIBUTARY WIDTH DETERMINATION.
3. IN THE FIRST COLUMN OF THE TABLE, LOCATE THE MULLION SPAN. IN THE FIRST ROW OF THE TABLE, LOCATE THE TRIBUTARY WIDTH. AT THE INTERSECTION OF THE ROW CONTAINING THE MULLION SPAN AND THE COLUMN CONTAINING THE TRIBUTARY WIDTH, READ THE MULLION LOAD RATING GIVEN IN PSF. THE MULLION LOAD RATING MUST BE EQUAL TO OR GREATER THAN THE DESIGN LOAD REQUIREMENT DETERMINED IN STEP 1 ABOVE.

Approved as complying with the Florida Building Code
Date 04/20/06
NOA# 04-1112.04
Miami-Dade Product Control Division
By

Documents Prepared By:
RW BUILDING CONSULTANTS, INC.
P.O. Box 230 Valrico FL. 33595
Phone No.: 813.659.9197
Florida Board of Professional Engineers
Certificate Of Authorization No. 28813
Lyndon F. Schmidt, P.E. No. 43409

PRODUCT: STRUCTURAL BEAM MULLIONS FOR USE WITH APPROVED SILVERLINE WINDOWS

PART OR ASSEMBLY: 1537 MULLION LOAD TABLE, WHEN USING TAPCON ANCHORS

NO.	DATE		BY
3	12/14/05	REVISED PER DADE LETTER	EW
2	11/10/05	REVISED PER DADE LETTER	WH
1	10/05/05	REVISED PER DADE LETTER	EW

REVISIONS

DATE: 11/2/04
SCALE: NTS
DWG. BY: EW
CHK. BY: LFS
DRAWING NO.: S-2489
SHEET 11 OF 16

\\Rwbcsrv\rwbc\Proj 500 - 650\pf639\S-2489 REV3\S-2489-11.dwg

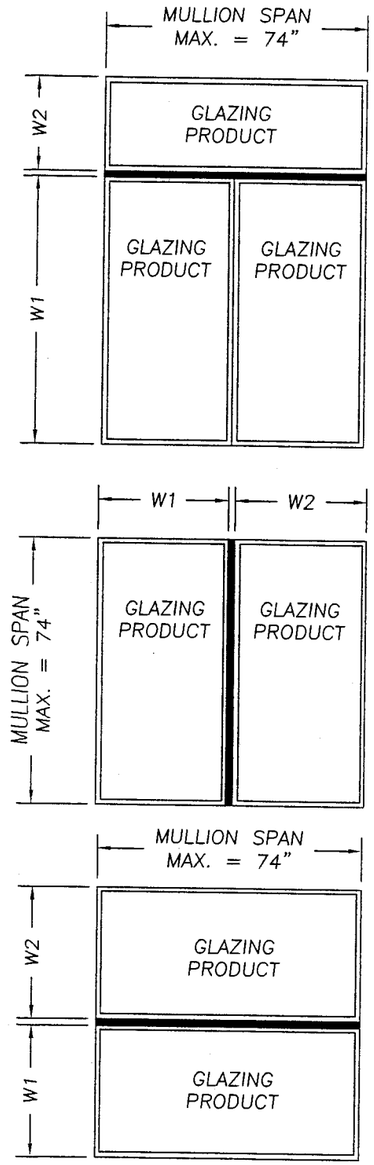

SILVERLINE 1537 STRUCTRUAL BEAM MULLION LOAD TABLE (PSF)

WOOD SCREW ANCHORS	TRIBUTARY WIDTH												
MULLION SPAN	28"	30"	32"	34"	36"	38"	40"	42"	44"	46"	48"	50"	52"
74"	32.80	30.61	28.70	27.01	25.51	**	**	**	**	**	**	**	**
72"	35.61	33.23	31.16	29.32	27.69	26.24	**	**	**	**	**	**	**
70"	38.75	36.16	33.90	31.91	30.14	28.55	27.12	25.83	**	**	**	**	**
68"	42.27	39.45	36.98	34.81	32.88	31.15	29.59	28.18	26.90	25.73	**	**	**
66"	46.23	43.15	40.45	38.07	35.96	34.06	32.36	30.82	29.42	28.14	26.97	25.89	**
64"	50.70	47.32	44.36	41.75	39.43	37.36	35.49	33.80	32.26	30.86	29.57	28.39	27.30
62"	55.77	52.05	48.79	45.92	43.37	41.09	39.04	37.18	35.49	33.94	32.53	31.23	30.03
60"	61.53	57.43	53.84	50.67	47.86	45.34	43.07	41.02	39.16	37.45	35.89	34.46	33.13
58"	66.16	61.75	57.89	54.48	51.45	48.75	46.31	44.10	42.10	40.27	38.59	37.05	35.62
56"	70.97	66.23	62.10	58.44	55.20	52.29	49.68	47.31	45.16	43.20	41.40	39.74	38.21
54"	76.32	71.23	66.78	62.85	59.36	56.24	53.42	50.88	48.57	46.46	44.52	42.74	41.10
52"	82.30	76.82	72.02	67.78	64.01	60.64	57.61	54.87	52.38	50.10	48.01	46.09	44.32
50"	89.02	83.09	77.89	73.31	69.24	65.59	62.31	59.35	56.65	54.19	51.93	49.85	47.93
48"	96.59	90.15	84.52	79.55	75.13	71.17	67.61	64.40	61.47	58.80	56.35	54.09	52.01
46"	105.17	98.16	92.03	86.61	81.80	77.50	73.62	70.12	66.93	64.02	61.35	58.90	56.63
44"	114.95	107.29	100.58	94.67	89.41	84.70	80.47	76.64	73.15	69.97	67.06	64.37	61.90
42"	126.16	117.75	110.39	103.90	98.13	92.96	88.31	84.11	80.28	76.79	73.59	70.65	67.93
40"	139.09	129.82	121.71	114.55	108.18	102.49	97.37	92.73	88.51	84.67	81.14	77.89	74.90
38"	154.12	143.85	134.86	126.92	119.87	113.56	107.88	102.75	98.08	93.81	89.90	86.31	82.99
36"	171.72	160.27	150.26	141.42	133.56	126.53	120.20	114.48	109.28	104.53	100.17	96.16	92.46
34"	192.52	179.68	168.45	158.54	149.74	141.85	134.76	128.34	122.51	117.18	112.30	107.81	103.66
32"	200.00	200.00	190.17	178.98	169.04	160.14	152.13	144.89	138.30	132.29	126.78	121.71	117.03
30"	200.00	200.00	200.00	200.00	192.33	182.20	173.09	164.85	157.36	150.52	144.25	138.48	133.15
28"	200.00	200.00	200.00	200.00	200.00	200.00	191.31	182.20	173.92	166.36	159.43	153.05	147.16
26"	200.00	200.00	200.00	200.00	200.00	200.00	200.00	196.22	187.30	179.16	171.69	164.82	158.49
24"	200.00	200.00	200.00	200.00	200.00	200.00	200.00	200.00	200.00	194.09	186.00	178.56	171.69

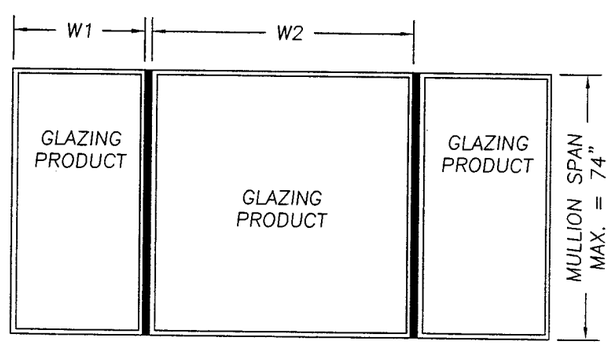

$$\text{TRIBUTARY WIDTH} = \frac{W1 + W2}{2}$$

INSTRUCTIONS FOR USE OF THE MULLION LOAD TABLE:

1. DETERMINE THE DESIGN LOAD REQUIREMENT PER ASCE 7-98 FOR THE PARTICULAR OPENING.
2. FOR THE PARTICULAR OPENING, DETERMINE THE TRIBUTARY WIDTH AND MULLION SPAN. REFERENCE THE SKETCHES ON THIS SHEET FOR MULLION SPAN AND TRIBUTARY WIDTH DETERMINATION.
3. IN THE FIRST COLUMN OF THE TABLE, LOCATE THE MULLION SPAN. IN THE FIRST ROW OF THE TABLE, LOCATE THE TRIBUTARY WIDTH. AT THE INTERSECTION OF THE ROW CONTAINING THE MULLION SPAN AND THE COLUMN CONTAINING THE TRIBUTARY WIDTH, READ THE MULLION LOAD RATING GIVEN IN PSF. THE MULLION LOAD RATING MUST BE EQUAL TO OR GREATER THAN THE DESIGN LOAD REQUIREMENT DETERMINED IN STEP 1 ABOVE.

Approved as complying with the Florida Building Code
Date 04/20/06
NOA# 04-1117.04
Miami-Dade Product Control Division
By

Documents Prepared By:
RW BUILDING CONSULTANTS, INC.
P.O. Box 230 Valrico FL. 33595
Phone No.: 813.659.9197
Florida Board of Professional Engineers
Certificate Of Authorization No. 0613
Lyndon F. Schmidt, P.E. No. 43409

PRODUCT: STRUCTURAL BEAM MULLIONS FOR USE WITH APPROVED SILVERLINE WINDOWS

PART OR ASSEMBLY: 1537 MULLION LOAD TABLE WHEN USING WOOD SCREWS

NO.	DATE	REVISIONS	BY
3	12/14/05	REVISED PER DADE LETTER	EW
2	11/10/05	REVISED PER DADE LETTER	WH
1	10/05/05	REVISED PER DADE LETTER	EW

DATE: 11/2/04
SCALE: NTS
DWG. BY: EW
CHK. BY: LFS
DRAWING NO.: S-2489
SHEET 12 OF 16

\\Rwbcsrv\rwbc\Proj 500 - 650\pf639\S-2489 REV3\S-2489-12.dwg

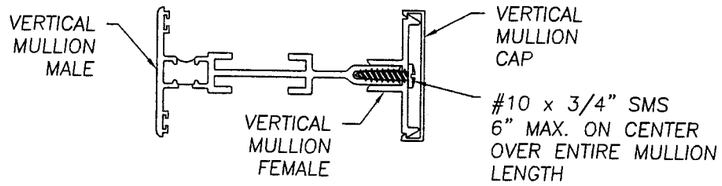

SERIES 1537 3 PIECE VERTICAL MULLION
ASSEMBLED VIEW

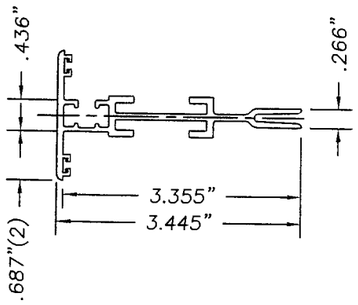

VERTICAL MULLION MALE
MAT'S: 6063–T6

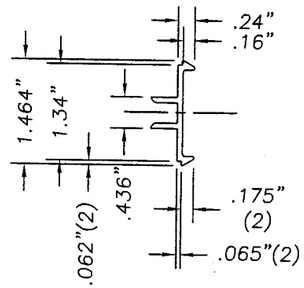

VERTICAL MULLION FEMALE
MAT'S: 6063–T6

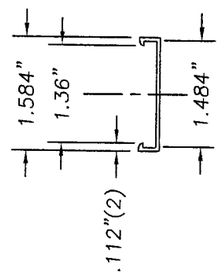

VERTICAL MULLION CAP
MAT'S: 6063–T6

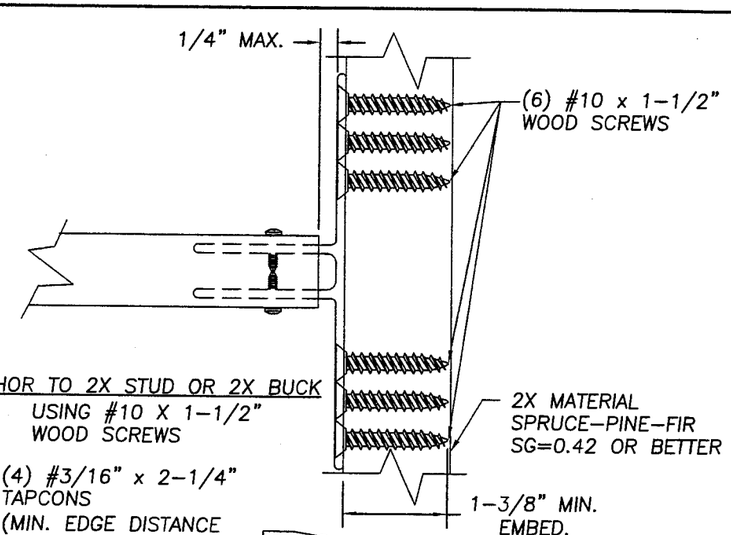

ANCHOR TO 2X STUD OR 2X BUCK
USING #10 X 1–1/2" WOOD SCREWS

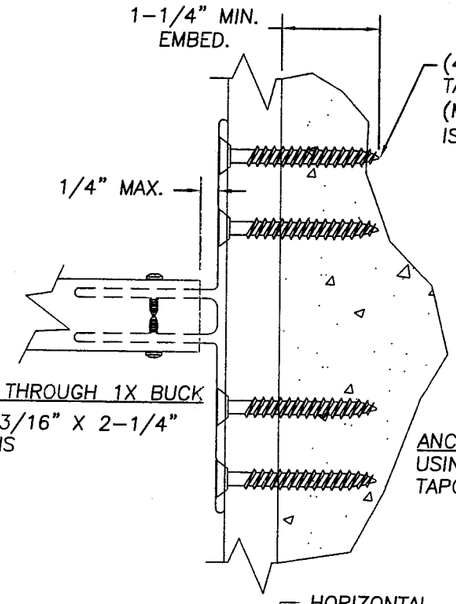

ANCHOR THROUGH 1X BUCK
USING 3/16" X 2–1/4" TAPCONS

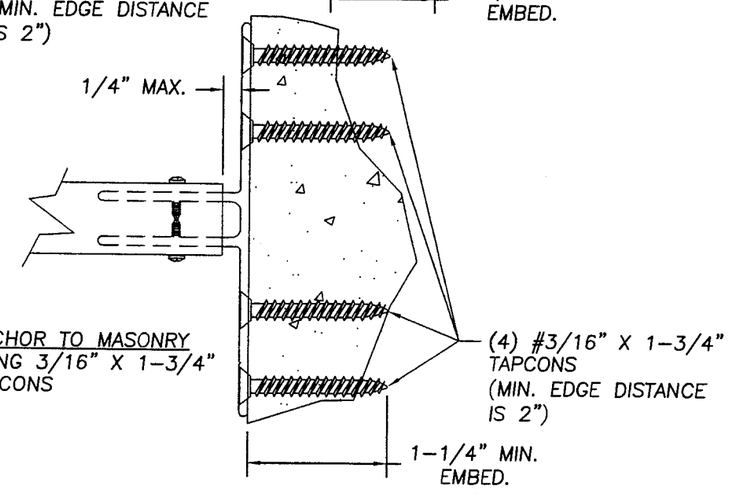

ANCHOR TO MASONRY
USING 3/16" X 1–3/4" TAPCONS

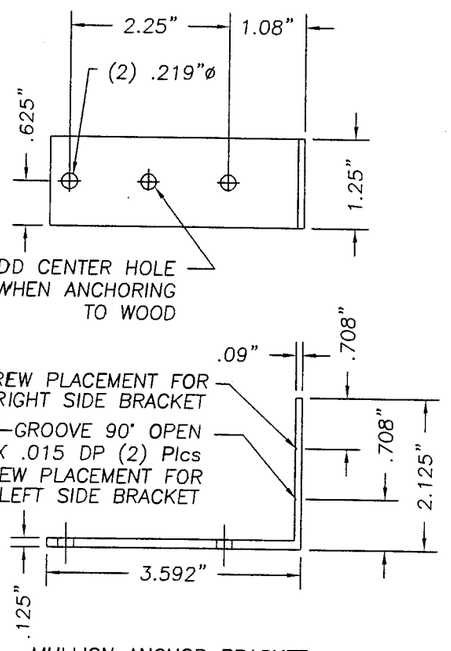

MULLION ANCHOR BRACKET
MAT'S: 6063–T6

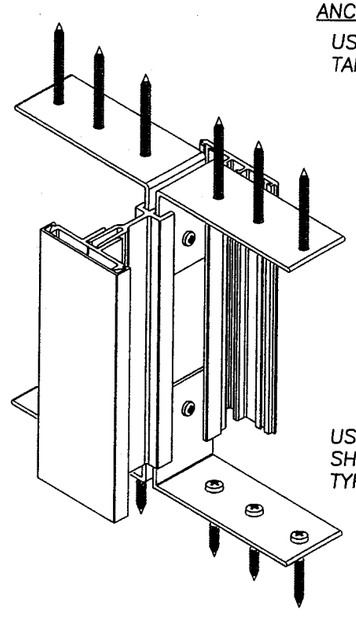

BASIC MULLION BRACKET ANCHORING
SERIES 1537 BRACKET SHOWN

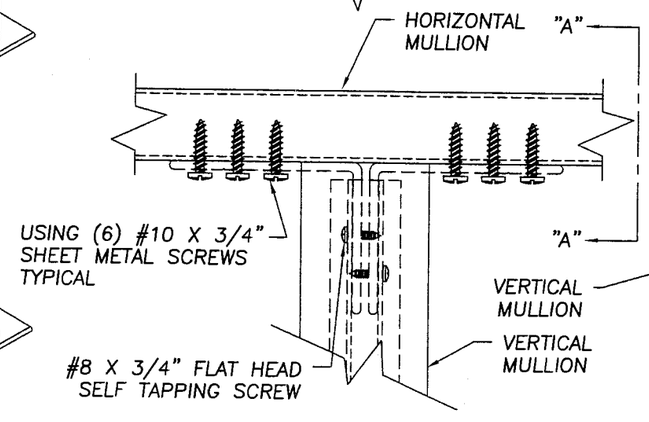

ANCHOR MULLION TO MULLION

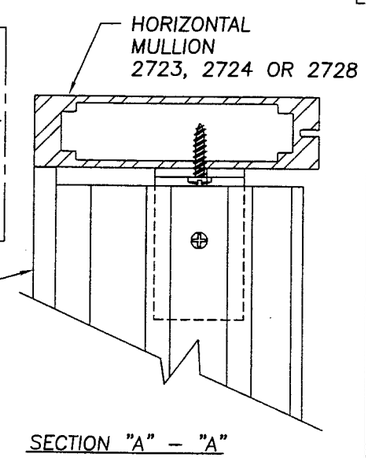

SECTION "A" – "A"

Approved as complying with the Florida Building Code
Date 04/20/06
NOA# 04-1117.04
Miami-Dade Product Control Division
By

Documents Prepared By:
RW BUILDING CONSULTANTS, INC.
P.O. Box 230 Valrico FL. 33595
Phone No.: 813.659.9197
Florida Board of Professional Engineers
Certificate Of Authorization No. 9813
Lyndon F. Schmidt, P.E. No. 43409
12/1/05

PRODUCT: STRUCTURAL BEAM MULLION FOR USE WITH APPROVED SILVERLINE WINDOWS

PART OR ASSEMBLY: MULLION SECTION DIMENSIONS & ANCHORING DETAILS

NO.	DATE	REVISIONS	BY
3	12/14/05	REVISED PER DADE LETTER	EW
2	11/10/05	REVISED PER DADE LETTER	WH
1	10/05/05	REVISED PER DADE LETTER	EW

DATE: 11/2/04
SCALE: NTS
DWG. BY: EW
CHK. BY: LFS
DRAWING NO.: S–2489
SHEET 13 OF 16

\\Rwbcsrv\rwbc\Proj 500 - 650\pf639\S-2489 REV3\S-2489-13.dwg

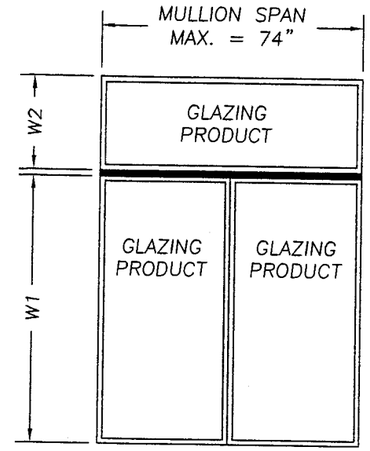

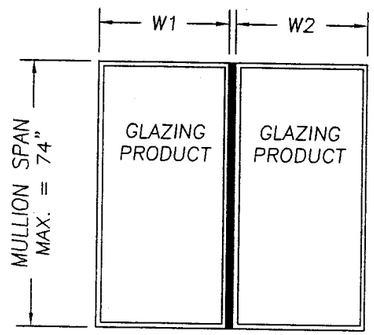

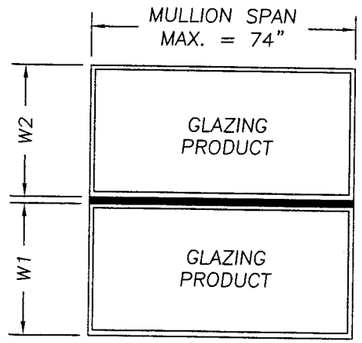

$$\text{TRIBUTARY WIDTH} = \frac{W1 + W2}{2}$$

SILVERLINE 7537 STRUCTRUAL BEAM MULLION LOAD TABLE (PSF)

CONCRETE SCREW ANCHORS	TRIBUTARY WIDTH												
MULLION SPAN	28"	30"	32"	34"	36"	38"	40"	42"	44"	46"	48"	50"	52"
74"	31.91	29.78	27.92	26.28	24.82	23.51	22.34	21.27	20.30	19.42	18.61	17.87	17.18
72"	34.64	32.33	30.31	28.53	26.94	25.53	24.25	23.09	22.04	21.09	20.21	19.40	18.65
70"	37.70	35.18	32.98	31.04	29.32	27.78	26.39	25.13	23.99	22.95	21.99	21.11	20.30
68"	41.12	38.38	35.98	33.86	31.98	30.30	28.78	27.41	26.17	25.03	23.99	23.03	22.14
66"	44.97	41.98	39.35	37.04	34.98	33.14	31.48	29.98	28.62	27.38	26.23	25.19	24.22
64"	49.32	46.04	43.16	40.62	38.36	36.34	34.53	32.88	31.39	30.02	28.77	27.62	26.56
62"	54.25	50.64	47.47	44.68	42.20	39.98	37.98	36.17	34.52	33.02	31.65	30.38	29.21
60"	59.86	55.87	52.38	49.30	46.56	44.11	41.90	39.91	38.09	36.44	34.92	33.52	32.23
58"	64.42	60.13	56.37	53.05	50.11	47.47	45.10	42.95	41.00	39.21	37.58	36.08	34.69
56"	69.11	64.50	60.47	56.91	53.75	50.92	48.38	46.07	43.98	42.07	40.31	38.70	37.21
54"	74.32	69.37	65.03	61.21	57.81	54.76	52.02	49.55	47.30	45.24	43.35	41.62	40.02
52"	80.15	74.80	70.13	66.00	62.34	59.06	56.10	53.43	51.00	48.79	46.75	44.88	43.16
50"	86.69	80.91	75.85	71.39	67.42	63.88	60.68	57.79	55.17	52.77	50.57	48.55	46.68
48"	94.06	87.79	82.30	77.46	73.16	69.31	65.84	62.71	59.86	57.26	54.87	52.68	50.65
46"	102.42	95.59	89.62	84.35	79.66	75.47	71.69	68.28	65.18	62.34	59.74	57.36	55.15
44"	111.94	104.48	97.95	92.19	87.07	82.48	78.36	74.63	71.24	68.14	65.30	62.69	60.28
42"	122.86	114.67	107.50	101.18	95.56	90.53	86.00	81.90	78.18	74.78	71.67	68.80	66.15
40"	135.45	126.42	118.52	111.55	105.35	99.81	94.82	90.30	86.20	82.45	79.01	75.85	72.93
38"	150.08	140.08	131.32	123.60	116.73	110.59	105.06	100.06	95.51	91.36	87.55	84.05	80.81
36"	167.22	156.07	146.32	137.71	130.06	123.22	117.06	111.48	106.41	101.79	97.55	93.64	90.04
34"	187.47	174.98	164.04	154.39	145.81	138.14	131.23	124.98	119.30	114.11	109.36	104.99	100.95
32"	200.00	197.53	185.19	174.29	164.61	155.95	148.15	141.09	134.68	128.83	123.46	118.52	113.96
30"	200.00	200.00	200.00	198.31	187.29	177.43	168.56	160.53	153.24	146.57	140.47	134.85	129.66
28"	200.00	200.00	200.00	200.00	200.00	198.14	188.23	179.27	171.12	163.68	156.86	150.58	144.79
26"	200.00	200.00	200.00	200.00	200.00	200.00	200.00	193.05	184.28	176.27	168.92	162.17	155.93
24"	200.00	200.00	200.00	200.00	200.00	200.00	200.00	200.00	199.64	190.96	183.00	175.68	168.92

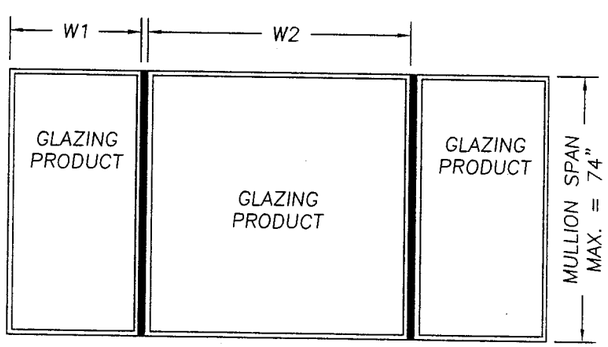

INSTRUCTIONS FOR USE OF THE MULLION LOAD TABLE:

1. DETERMINE THE DESIGN LOAD REQUIREMENT PER ASCE 7-98 FOR THE PARTICULAR OPENING.
2. FOR THE PARTICULAR OPENING, DETERMINE THE TRIBUTARY WIDTH AND MULLION SPAN. REFERENCE THE SKETCHES ON THIS SHEET FOR MULLION SPAN AND TRIBUTARY WIDTH DETERMINATION.
3. IN THE FIRST COLUMN OF THE TABLE, LOCATE THE MULLION SPAN. IN THE FIRST ROW OF THE TABLE, LOCATE THE TRIBUTARY WIDTH. AT THE INTERSECTION OF THE ROW CONTAINING THE MULLION SPAN AND THE COLUMN CONTAINING THE TRIBUTARY WIDTH, READ THE MULLION LOAD RATING GIVEN IN PSF. THE MULLION LOAD RATING MUST BE EQUAL TO OR GREATER THAN THE DESIGN LOAD REQUIREMENT DETERMINED IN STEP 1 ABOVE.

Approved as complying with the Florida Building Code
Date 04/20/06
NOAA 00-1112.09
Miami Dade Product Control Division
By

Documents Prepared By:
RW BUILDING CONSULTANTS, INC.
P.O. Box 230 Valrico FL. 33595
Phone No.: 813.659.9197
Florida Board of Professional Engineers
Certificate Of Authorization No. 9813
Lyndon F. Schmidt, P.E. No. 43409
12/15/05

PRODUCT: STRUCTURAL BEAM MULLIONS FOR USE WITH APPROVED SILVERLINE WINDOWS

PART OR ASSEMBLY: 7537 MULLION LOAD TABLE, WHEN USING TAPCON ANCHORS

NO.	DATE		BY
3	12/14/05	REVISED PER DADE LETTER	EW
2	11/10/05	REVISED PER DADE LETTER	WH
1	10/05/05	REVISED PER DADE LETTER	EW

REVISIONS

DATE: 11/2/04
SCALE: NTS
DWG. BY: RAH
CHK. BY: LFS
DRAWING NO.: S-2489
SHEET 14 OF 16

\\Rwbcsrv\rwbc\Proj 500 - 650\pf639\S-2489 REV3\S-2489-14.dwg

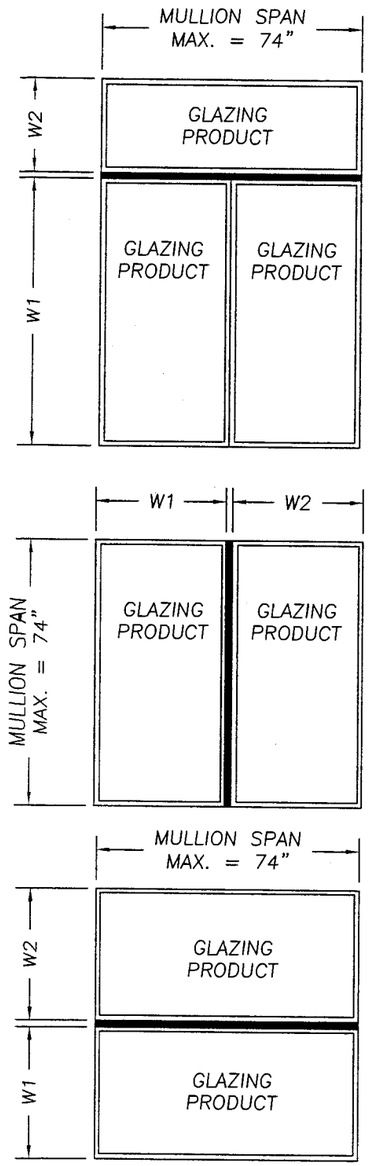

$$\text{TRIBUTARY WIDTH} = \frac{W1 + W2}{2}$$

SILVERLINE 7537 STRUCTRUAL BEAM MULLION LOAD TABLE (PSF)

WOOD SCREW ANCHORS	TRIBUTARY WIDTH												
MULLION SPAN	28"	30"	32"	34"	36"	38"	40"	42"	44"	46"	48"	50"	52"
74"	31.91	29.78	27.92	26.28	**	**	**	**	**	**	**	**	**
72"	34.64	32.33	30.31	28.53	26.94	25.53	**	**	**	**	**	**	**
70"	37.70	35.18	32.98	31.04	29.32	27.78	26.39	25.13	**	**	**	**	**
68"	41.12	38.38	35.98	33.86	31.98	30.30	28.78	27.41	26.17	25.03	**	**	**
66"	44.97	41.98	39.35	37.04	34.98	33.14	31.48	29.98	28.62	27.38	26.23	25.19	**
64"	49.32	46.04	43.16	40.62	38.36	36.34	34.53	32.88	31.39	30.02	28.77	27.62	26.56
62"	54.25	50.64	47.47	44.68	42.20	39.98	37.98	36.17	34.52	33.02	31.65	30.38	29.21
60"	59.86	55.87	52.38	49.30	46.56	44.11	41.90	39.91	38.09	36.44	34.92	33.52	32.23
58"	64.42	60.13	56.37	53.05	50.11	47.47	45.10	42.95	41.00	39.21	37.58	36.08	34.69
56"	69.11	64.50	60.47	56.91	53.75	50.92	48.38	46.07	43.98	42.07	40.31	38.70	37.21
54"	74.32	69.37	65.03	61.21	57.81	54.76	52.02	49.55	47.30	45.24	43.35	41.62	40.02
52"	80.15	74.80	70.13	66.00	62.34	59.06	56.10	53.43	51.00	48.79	46.75	44.88	43.16
50"	86.69	80.91	75.85	71.39	67.42	63.88	60.68	57.79	55.17	52.77	50.57	48.55	46.68
48"	94.06	87.79	82.30	77.46	73.16	69.31	65.84	62.71	59.86	57.26	54.87	52.68	50.65
46"	102.42	95.59	89.62	84.35	79.66	75.47	71.69	68.28	65.18	62.34	59.74	57.36	55.15
44"	111.94	104.48	97.95	92.19	87.07	82.48	78.36	74.63	71.24	68.14	65.30	62.69	60.28
42"	122.86	114.67	107.50	101.18	95.56	90.53	86.00	81.90	78.18	74.78	71.67	68.80	66.15
40"	135.45	126.42	118.52	111.55	105.35	99.81	94.82	90.30	86.20	82.45	79.01	75.85	72.93
38"	150.08	140.08	131.32	123.60	116.73	110.59	105.06	100.06	95.51	91.36	87.55	84.05	80.81
36"	167.22	156.07	146.32	137.71	130.06	123.22	117.06	111.48	106.41	101.79	97.55	93.64	90.04
34"	187.47	174.98	164.04	154.39	145.81	138.14	131.23	124.98	119.30	114.11	109.36	104.99	100.95
32"	200.00	197.53	185.19	174.29	164.61	155.95	148.15	141.09	134.68	128.83	123.46	118.52	113.96
30"	200.00	200.00	200.00	198.31	187.29	177.43	168.56	160.53	153.24	146.57	140.47	134.85	129.66
28"	200.00	200.00	200.00	200.00	200.00	200.00	191.31	182.20	173.92	166.36	159.43	153.05	147.16
26"	200.00	200.00	200.00	200.00	200.00	200.00	200.00	196.22	187.30	179.16	171.69	164.82	158.49
24"	200.00	200.00	200.00	200.00	200.00	200.00	200.00	200.00	200.00	194.09	186.00	178.56	171.69

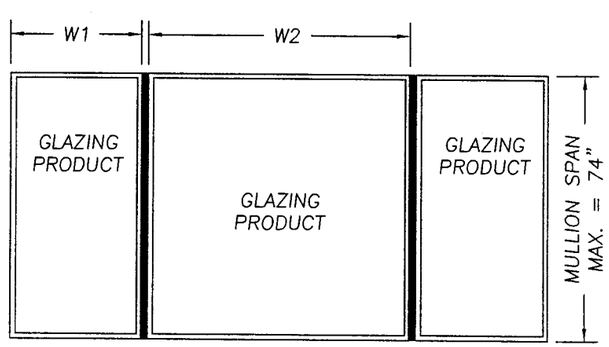

INSTRUCTIONS FOR USE OF THE MULLION LOAD TABLE:

1. DETERMINE THE DESIGN LOAD REQUIREMENT PER ASCE 7-98 FOR THE PARTICULAR OPENING.
2. FOR THE PARTICULAR OPENING, DETERMINE THE TRIBUTARY WIDTH AND MULLION SPAN. REFERENCE THE SKETCHES ON THIS SHEET FOR MULLION SPAN AND TRIBUTARY WIDTH DETERMINATION.
3. IN THE FIRST COLUMN OF THE TABLE, LOCATE THE MULLION SPAN. IN THE FIRST ROW OF THE TABLE, LOCATE THE TRIBUTARY WIDTH. AT THE INTERSECTION OF THE ROW CONTAINING THE MULLION SPAN AND THE COLUMN CONTAINING THE TRIBUTARY WIDTH, READ THE MULLION LOAD RATING GIVEN IN PSF. THE MULLION LOAD RATING MUST BE EQUAL TO OR GREATER THAN THE DESIGN LOAD REQUIREMENT DETERMINED IN STEP 1 ABOVE.

Approved as complying with the Florida Building Code
Date 04/20/06
NOA# 04-1117.04
Miami-Dade Product Control Division
By

Documents Prepared By:
RW BUILDING CONSULTANTS, INC.
P.O. Box 230 Valrico FL. 33595
Phone No.: 813.659.9197
Florida Board of Professional Engineers
Certificate Of Authorization No. 9818
Lyndon F. Schmidt, P.E. No. 43409

PRODUCT: STRUCTURAL BEAM MULLIONS FOR USE WITH APPROVED SILVERLINE WINDOWS

PART OR ASSEMBLY: 7537 MULLION LOAD TABLE, WHEN USING WOOD SCREWS

NO.	DATE		BY
3	12/14/05	REVISED PER DADE LETTER	EW
2	11/10/05	REVISED PER DADE LETTER	WH
1	10/05/05	REVISED PER DADE LETTER	EW

REVISIONS

DATE: 11/2/04
SCALE: NTS
DWG. BY: RAH
CHK. BY: LFS
DRAWING NO.: S-2489
SHEET 15 OF 16

\\Rwbcsrv\rwbc\Proj 500 - 650\pf639\S-2489 REV3\S-2489-15.dwg

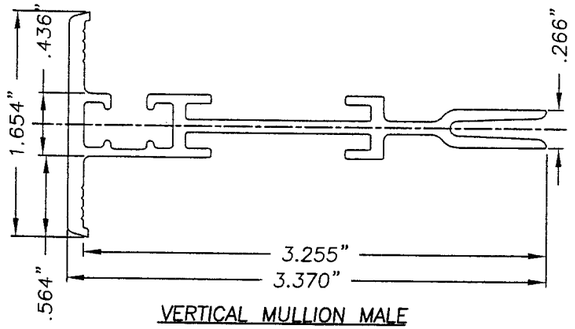

VERTICAL MULLION MALE
MAT'S: 6063–T6

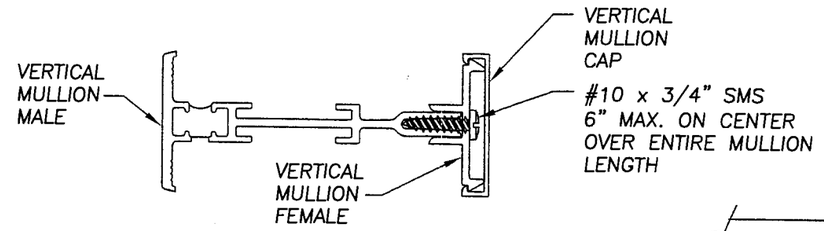

SERIES 7537 3 PIECE VERTICAL MULLION
ASSEMBLED VIEW

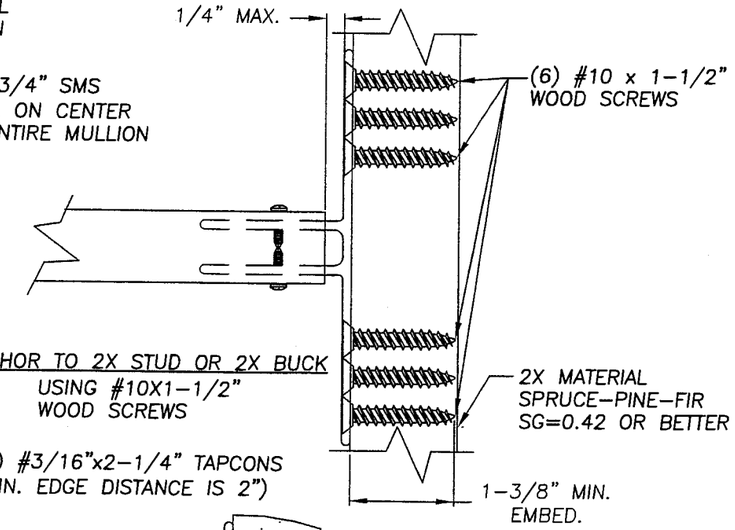

ANCHOR TO 2X STUD OR 2X BUCK
USING #10X1–1/2" WOOD SCREWS

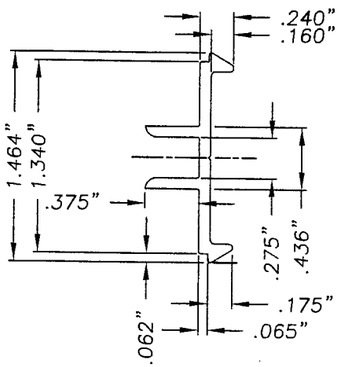

VERTICAL MULLION FEMALE
MAT'S: 6063–T6

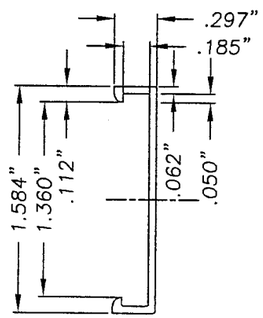

VERTICAL MULLION CAP
MAT'S: 6063–T6

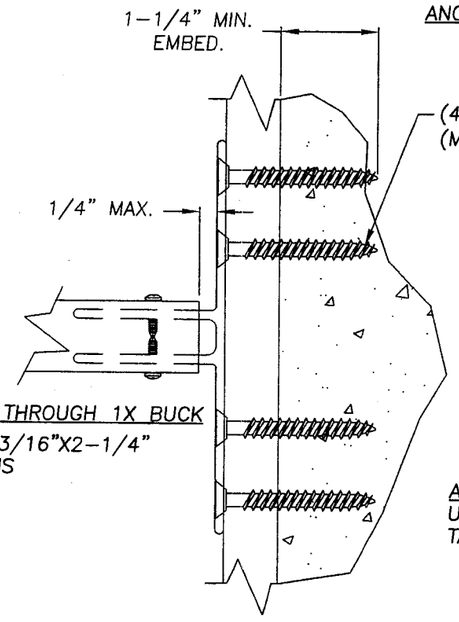

ANCHOR THROUGH 1X BUCK
USING 3/16"X2–1/4" TAPCONS

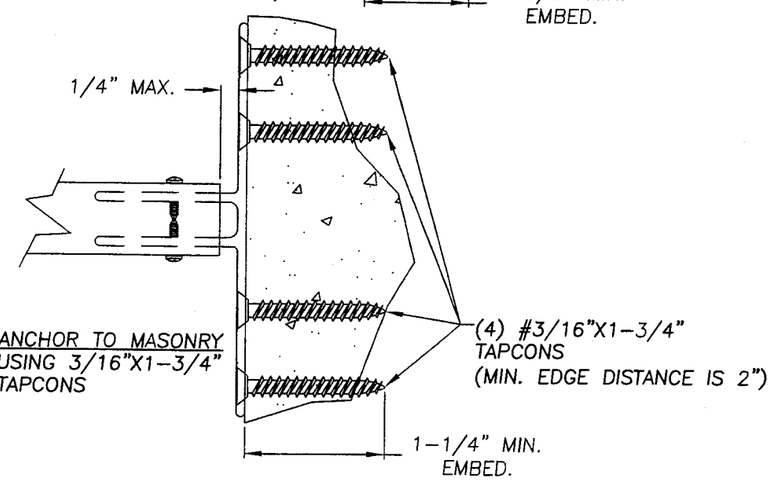

ANCHOR TO MASONRY
USING 3/16"X1–3/4" TAPCONS

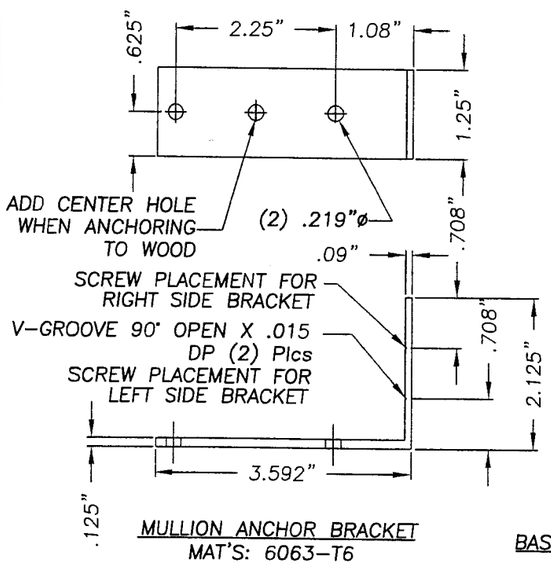

MULLION ANCHOR BRACKET
MAT'S: 6063–T6

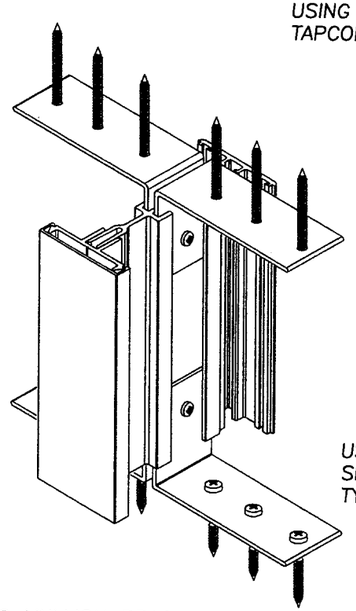

BASIC MULLION BRACKET ANCHORING
SERIES 7537 BRACKET SHOWN

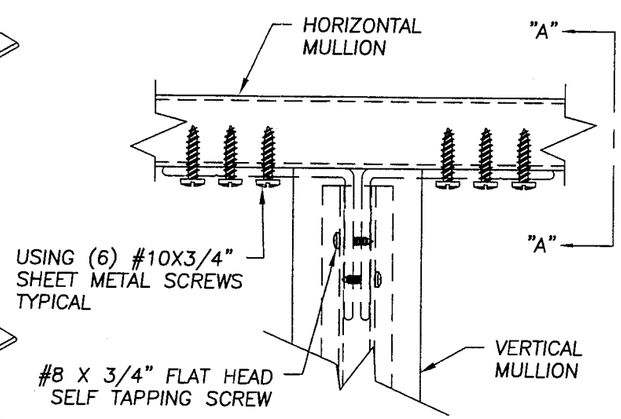

ANCHOR MULLION TO MULLION

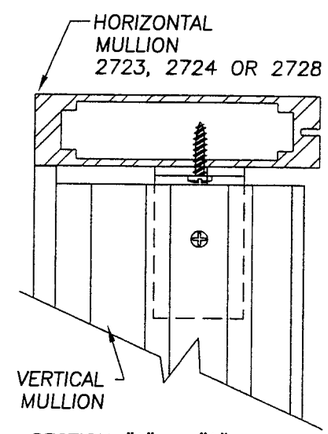

SECTION "A" – "A"

Approved as complying with the Florida Building Code
Date 04/20/06
NOA# 04-1112.04
Miami Dade Product Control Division
By

Documents Prepared By:
RW BUILDING CONSULTANTS, INC.
P.O. Box 230 Valrico FL. 33595
Phone No.: 813.659.9197
Florida Board of Professional Engineers
Certificate Of Authorization No. 8813
Lyndon F. Schmidt, P.E. No. 43409

PRODUCT: STRUCTURAL BEAM MULLIONS FOR USE WITH APPROVED SILVER LINE WINDOWS

PART OR ASSEMBLY: MULLION SECTION DIMENSIONS & ANCHORING DETAILS

REVISIONS

NO.	DATE		BY
3	12/14/05	REVISED PER DADE LETTER	EW
2	11/10/05	REVISED PER DADE LETTER	WH
1	10/05/05	REVISED PER DADE LETTER	EW

DATE: 11/2/04
SCALE: NT.
DWG. BY: RAH
CHG.. BY: LFS
DRAWING NO.: S–2489
SHEET 16 OF 16

\\Rwbcsrv\rwbc\Proj 500 - 650\pf639\S-2489 REV3\S-2489-16.dwg