MIAMI-DADE COUNTY

BUILDING CODE COMPLIANCE OFFICE (BCCO)
PRODUCT CONTROL DIVISION

MIAMI-DADE COUNTY, FLORIDA
METRO-DADE FLAGLER BUILDING
140 WEST FLAGLER STREET, SUITE 1603
MIAMI, FLORIDA 33130-1563
(305) 375-2901 FAX (305) 375-2908

NOTICE OF ACCEPTANCE (NOA)

Delta Doors Manufacturing Co.
7500 NW 69th Ave
Miami, FL 33166

SCOPE:

This NOA is being issued under the applicable rules and regulations governing the use of construction materials. The documentation submitted has been reviewed by Miami-Dade County Product Control Division and accepted by the Board of Rules and Appeals (BORA) to be used in Miami Dade County and other areas where allowed by the Authority Having Jurisdiction (AHJ).

This NOA shall not be valid after the expiration date stated below. The Miami-Dade County Product Control Division (In Miami Dade County) and/or the AHJ (in areas other than Miami Dade County) reserve the right to have this product or material tested for quality assurance purposes. If this product or material fails to perform in the accepted manner, the manufacturer will incur the expense of such testing and the AHJ may immediately revoke, modify, or suspend the use of such product or material within their jurisdiction. BORA reserves the right to revoke this acceptance, if it is determined by Miami-Dade County Product Control Division that this product or material fails to meet the requirements of the applicable building code.

This product is approved as described herein, and has been designed to comply with the Florida Building Code, including the High Velocity Hurricane Zone.

DESCRIPTION: Series DH-350 Aluminum Outswing Entrance Door with Transom and Sidelites

APPROVAL DOCUMENT: Drawing No. **W04-83**, titled "Series DH-350 Alum Out-Swing Entrance Door", sheets 1 through 10 of 10, prepared by the AL-Farooq Corporation, dated 10/05/04, signed and sealed by Humayoun Farooq, P.E., bearing the Miami-Dade County Product Control Approval stamp with the Notice of Acceptance number and approval date by the Miami-Dade County Product Control Division.

MISSILE IMPACT RATING: Large and Small Missile Impact

LABELING: Each unit shall bear a permanent label with the manufacturer's name or logo, city, state and following statement: "Miami-Dade County Product Control Approved", unless otherwise noted herein.

RENEWAL of this NOA shall be considered after a renewal application has been filed and there has been no change in the applicable building code negatively affecting the performance of this product.

TERMINATION of this NOA will occur after the expiration date or if there has been a revision or change in the materials, use, and/or manufacture of the product or process. Misuse of this NOA as an endorsement of any product, for sales, advertising or any other purposes shall automatically terminate this NOA. Failure to comply with any section of this NOA shall be cause for termination and removal of NOA.

ADVERTISEMENT: The NOA number preceded by the words Miami-Dade County, Florida, and followed by the expiration date may be displayed in advertising literature. If any portion of the NOA is displayed, then it shall be done in its entirety.

INSPECTION: A copy of this entire NOA shall be provided to the user by the manufacturer or its distributors and shall be available for inspection at the job site at the request of the Building Official.

This NOA consists of this page 1 and evidence page E-1, and E-2, as well as approval document mentioned above.
The submitted documentation was reviewed by **Herminio F. Gonzalez, P.E., Director, BCCO**

PRODUCT CONTROL ACCEPTED 1/21/05

Delta Doors Manufacturing Co.

NOTICE OF ACCEPTANCE: EVIDENCE SUBMITTED

A. DRAWINGS

1. Manufacturer's die drawings and sections.
2. Drawing No. **W04-83**, titled "Series DH-350 Alum Out-Swing Entrance Door", sheets 1 through 10 of 10, prepared by the AL-Farooq Corporation, dated 10/05/04, signed and sealed by Humayoun Farooq, P.E.

B. TESTS

1. Test reports on 1) Air Infiltration Test, per FBC, TAS 202-94
2) Uniform Static Air Pressure Test, Loading per FBC TAS 202-94
3) Large Missile Impact Test per FBC, TAS 201-94
4) Cyclic Wind Pressure Loading per FBC, TAS 203-94
5) Forced Entry Test, Per FBC 2411 3.2.1 and TAS 202-94
along with marked-up drawings and installation diagram of aluminum outswinging entrance door, prepared by Fenestration Testing Laboratory, Inc., Test Reports No. **FTL-4306,** dated 08/31/04 signed and sealed by Edmundo Largaespada, P. E.

2. Test reports on 1) Air Infiltration Test, per FBC, TAS 202-94
2) Uniform Static Air Pressure Test, Loading per FBC TAS 202-94
3) Large Missile Impact Test per FBC, TAS 201-94
4) Cyclic Wind Pressure Loading per FBC, TAS 203-94
5) Forced Entry Test, Per FBC 2411 3.2.1 and TAS 202-94
along with marked-up drawings and installation diagram of a aluminum outswinging entrance door, prepared by Fenestration Testing Laboratory, Inc., Test Report No. **FTL-4320**, dated 09/15/04, signed and sealed by Edmundo Largaespada Chan, P.E.

3. Test reports on 1) Air Infiltration Test, per FBC, TAS 202-94
2) Uniform Static Air Pressure Test, Loading per FBC TAS 202-94
3) Large Missile Impact Test per FBC, TAS 201-94
4) Cyclic Wind Pressure Loading per FBC, TAS 203-94
5) Forced Entry Test, Per FBC 2411 3.2.1 and TAS 202-94
along with marked-up drawings and installation diagram of a aluminum outswinging entrance door, prepared by Fenestration Testing Laboratory, Inc., Test Report No. **FTL-4254**, dated 06/28/04, signed and sealed by Edmundo Largaespada Chan, P.E.

C. CALCULATIONS

1. Anchor Calculations, ASTM- E 1300, and structural analysis, prepared by AL- Farooq Corporation, dated 11/17/04, signed and sealed by Humayoun Farooq, P.E.

D. QUALITY ASSURANCE

1. Miami Dade /Building Code Compliance Office (BCCO).

for M Khalk.

Herminio F. Gonzalez, P.E.
Director, Building Code Compliance Office
NOA No 04-1123.01
Expiration Date: February 10, 2010
Approval Date: February 10, 2005

Delta Doors Manufacturing Co.

NOTICE OF ACCEPTANCE: EVIDENCE SUBMITTED

E. MATERIAL CERTIFICATIONS

1. Notice of Acceptance No. **03-0415.13** issued to Solutia, Inc. for "Vanceva Composites" dated 12/11/08, expiring on 12/11/08.

F. STATEMENTS

1. Statement letter of code compliance, dated October 28, 2004 signed and sealed by Humayoun Farooq, P.E.
2. Statement letter of no financial interest, dated October 28, 2004 signed and sealed by Humayoun Farooq, P.E.

G. OTHER

1. Letter from consultant stating that the product is in compliance with the Florida Building Code (FBC).

for M Shark

Herminio F. Gonzalez, P.E.
Director, Building Code Compliance Office
NOA No 04-1123.01
Expiration Date: February 10, 2010
Approval Date: February 10, 2005

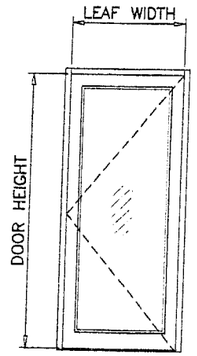

(X)

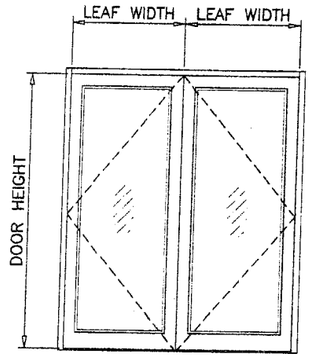

(XX)

SINGLE ENTRANCE DOORS W/O TRANSOM				
DESIGN LOAD CAPACITY – PSF				
NOMINAL DIMS.		LOCK OPTION 1	LOCK OPTION 2	
		LOCK STILE REINFORCED	LOCK STILE UN-REINFORCED	LOCK STILE REINFORCED
OPNG. HEIGHT INCHES	DOOR WIDTH INCHES	EXT. (+) INT. (–)	EXT. (+) INT. (–)	EXT. (+) INT. (–)
80 TO 108	32 TO 44	70.0	75.0	100.0

DOUBLE ENTRANCE DOORS W/O TRANSOM				
DESIGN LOAD CAPACITY – PSF				
NOMINAL DIMS.		LOCK OPTION 1	LOCK OPTION 2	
		LOCK STILE REINFORCED	LOCK STILE UN-REINFORCED	LOCK STILE REINFORCED
OPNG. HEIGHT INCHES	DOOR WIDTH INCHES	EXT. (+) INT. (–)	EXT. (+) INT. (–)	EXT. (+) INT. (–)
80 TO 108	64 TO 88	70.0	75.0	100.0

FOR LOCK OPTION DESCRIPTION SEE SHEET 9.

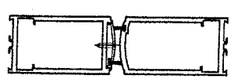

LOCK STILE
UN-REINFORCED

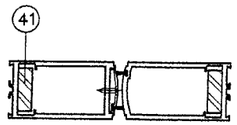

LOCK STILE
REINFORCED

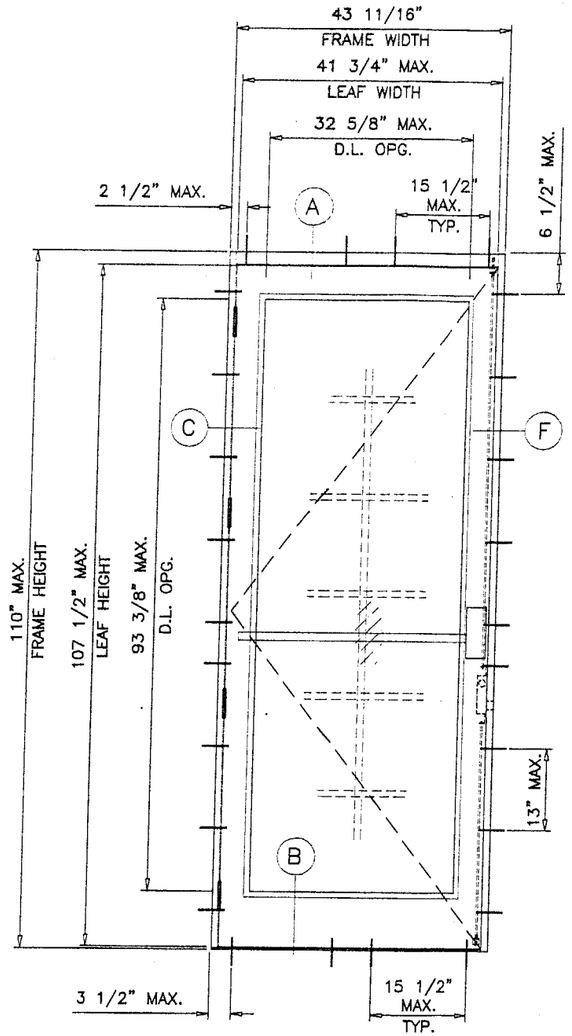

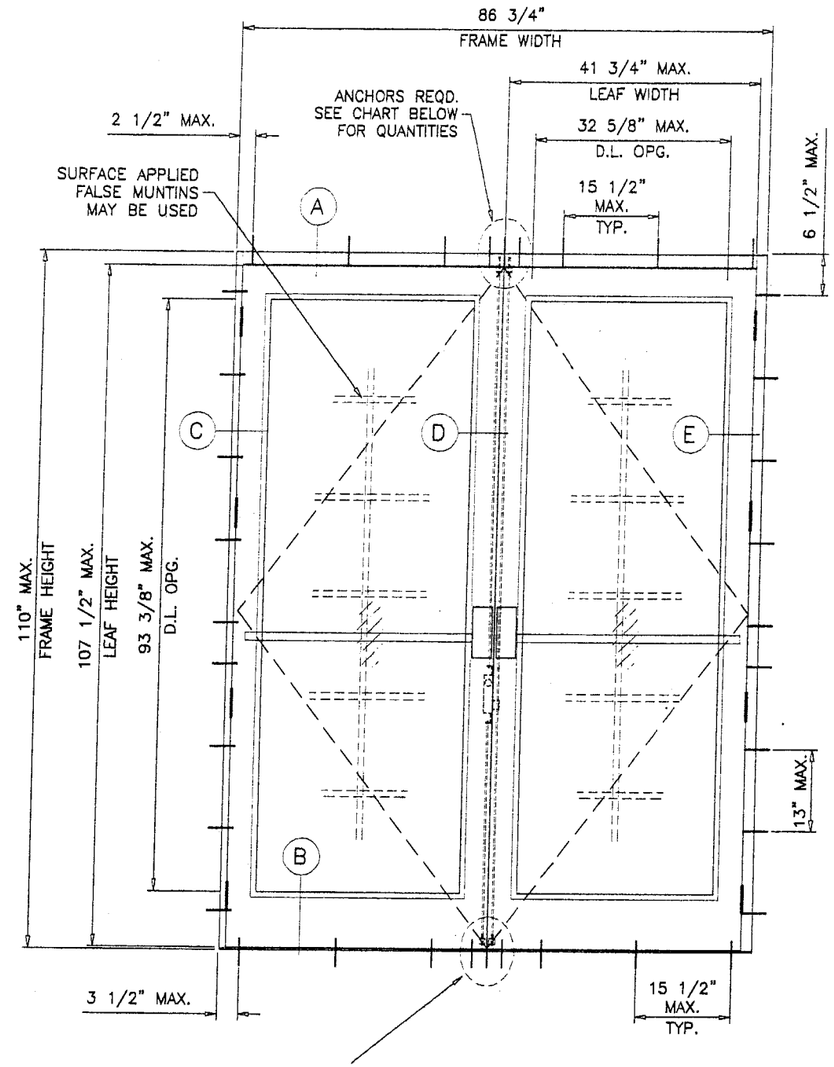

TYPICAL ELEVATIONS

SUBSTRATE	TOTAL NO. OF ANCHORS AT MTG. STILE ENDS UPTO 75 PSF	UPTO 100 PSF
WOOD	5	7
CONCRETE	2	4
METAL	2	4

DH-350 ALUM OUT-SWING ENTRANCE DOOR

DOORS GLAZED WITH LAMINATED GLASS RATED FOR LARGE MISSILE IMPACT AND REQUIRE NO SHUTTERS.

DOORS NOT APPROVED FOR INSTALLATIONS WHERE WATER INFILTRATION RESISTANCE IS REQUIRED.

SEE CHARTS ABOVE FOR DESIGN LOAD CAPACITY OF SINGLE (X) AND DOUBLE (XX) LEAF DOORS W/O TRANSOMS.

SEE CHARTS ON SHEET 2 FOR DESIGN LOAD CAPACITY OF SINGLE (O/X) OR DOUBLE (O/XX) LEAF DOORS WITH TRANSOMS.

SEE CHARTS ON SHEETS 3 AND 4 FOR DESIGN LOAD CAPACITY OF DOOR MULLION.

USE LOWER VALUES OF DOOR MULLION CHARTS (SHEETS 3 & 4) OR DOOR CAPACITY CHARTS (SHEETS 1 & 2).

NOTES:

THIS PRODUCT HAS BEEN DESIGNED AND TESTED TO COMPLY WITH THE REQUIREMENTS OF THE FLORIDA BUILDING CODE INCLUDING HIGH VELOCITY HURRICANE ZONE.

WOOD BUCKS BY OTHERS, MUST BE ANCHORED PROPERLY TO TRANSFER LOADS TO THE STRUCTURE.

ANCHORS SHALL BE AS LISTED, SPACED AS SHOWN ON DETAILS. ANCHOR EMBEDMENT TO BASE MATERIAL SHALL BE BEYOND WALL DRESSING OR STUCCO.

ANCHORING OR LOADING CONDITIONS NOT SHOWN IN THESE DETAILS ARE NOT PART OF THIS APPROVAL.

A 33% INCREASE IN ALLOWABLE STRESS WAS USED IN DESIGN OF ANCHORS.

Approved as complying with the Florida Building Code
Date 02/10/05
NOA# 04-1123.01
Miami-Dade Product Control Division
By

Engr: DR. HUMAYOUN FAROOQ
STRUCTURES
FLA. PE # 16557
C.A.N. 3538

NOV 18 2004

AL-FAROOQ CORPORATION
ENGINEERS, PLANNERS & PRODUCT DESIGN
1235 SW 87 AVE
MIAMI, FLORIDA 33174
TEL. (305) 264-8100 FAX. (305) 262-6978
COMP-ANL\W04-83DD

DH-350 ALUM OUT-SWING ENTRANCE DOOR (IMPACT)

DELTA DOORS
7500 N.W. 69TH AVE.
MIAMI, FL 33166
TEL (305) 888-0077 FAX. (305) 884-3111

revisions:

no	date	by	description

date: 10-05-04
scale: 1/2"=1'-0"
dr. by: HAMID
chk. by:

drawing no. W04-83

DOUBLE ENTRANCE DOORS WITH TRANSOM

DESIGN LOAD CAPACITY – PSF

NOMINAL DIMS.			LOCK OPTION 1	LOCK OPTION 2	
			LOCK STILE REINFORCED	LOCK STILE UN-REINFORCED	LOCK STILE REINFORCED
OPNG. WIDTH INCHES	DOOR HEIGHT INCHES	TRANSOM HEIGHT INCHES	EXT. (+) INT. (–)	EXT. (+) INT. (–)	EXT. (+) INT. (–)
72	80	12	70.0	75.0	100.0
		18	70.0	75.0	100.0
		24	70.0	75.0	100.0
		30	70.0	75.0	100.0
		36	70.0	75.0	100.0
		40	70.0	75.0	100.0
78		12	70.0	75.0	100.0
		18	70.0	75.0	100.0
		24	70.0	75.0	100.0
		30	70.0	75.0	100.0
		36	70.0	75.0	100.0
		40	70.0	75.0	100.0
84		12	70.0	75.0	100.0
		18	70.0	75.0	100.0
		24	70.0	75.0	100.0
		30	70.0	75.0	100.0
		36	70.0	75.0	96.0
		40	70.0	75.0	92.0
72	84	12	70.0	75.0	100.0
		18	70.0	75.0	100.0
		24	70.0	75.0	100.0
		30	70.0	75.0	100.0
		36	70.0	75.0	100.0
78		12	70.0	75.0	100.0
		18	70.0	75.0	100.0
		24	70.0	75.0	100.0
		30	70.0	75.0	100.0
		36	70.0	75.0	100.0
84		12	70.0	75.0	100.0
		18	70.0	75.0	100.0
		24	70.0	75.0	100.0
		30	70.0	75.0	98.9
		36	70.0	75.0	92.8
72	90	12	70.0	75.0	100.0
		18	70.0	75.0	100.0
		24	70.0	75.0	100.0
		30	70.0	75.0	100.0
78		12	70.0	75.0	100.0
		18	70.0	75.0	100.0
		24	70.0	75.0	100.0
		30	70.0	75.0	100.0
84		12	70.0	75.0	100.0
		18	70.0	75.0	100.0
		24	70.0	75.0	100.0
		30	70.0	75.0	94.0
72	96	12	70.0	75.0	100.0
		18	70.0	75.0	100.0
		24	70.0	75.0	100.0
78		12	70.0	75.0	100.0
		18	70.0	75.0	100.0
		24	70.0	75.0	100.0
84		12	70.0	75.0	100.0
		18	70.0	75.0	100.0
		24	70.0	75.0	95.1

DOUBLE ENTRANCE DOORS WITH TRANSOM

DESIGN LOAD CAPACITY – PSF

NOMINAL DIMS.			LOCK OPTION 1	LOCK OPTION 2	
			LOCK STILE REINFORCED	LOCK STILE UN-REINFORCED	LOCK STILE REINFORCED
OPNG. WIDTH INCHES	DOOR HEIGHT INCHES	TRANSOM HEIGHT INCHES	EXT. (+) INT. (–)	EXT. (+) INT. (–)	EXT. (+) INT. (–)
72	102	12	70.0	75.0	100.0
		18	70.0	75.0	100.0
78		12	70.0	75.0	100.0
		18	70.0	75.0	100.0
84		12	70.0	75.0	100.0
		18	70.0	75.0	96.3
72	108	12	70.0	75.0	100.0
78		12	70.0	75.0	100.0
84		12	70.0	75.0	97.5

FOR LOCK OPTION DESCRIPTION SEE SHEET 9.

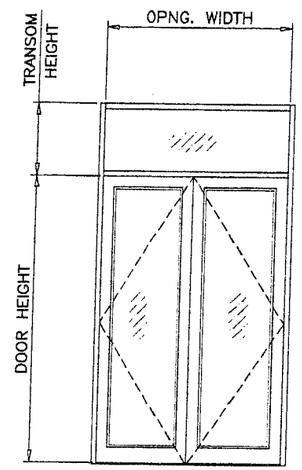

(O/XX)

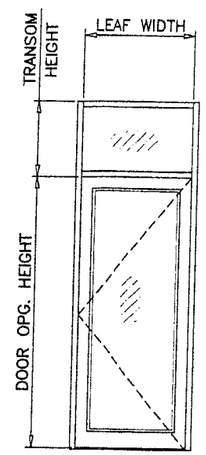

(O/X)

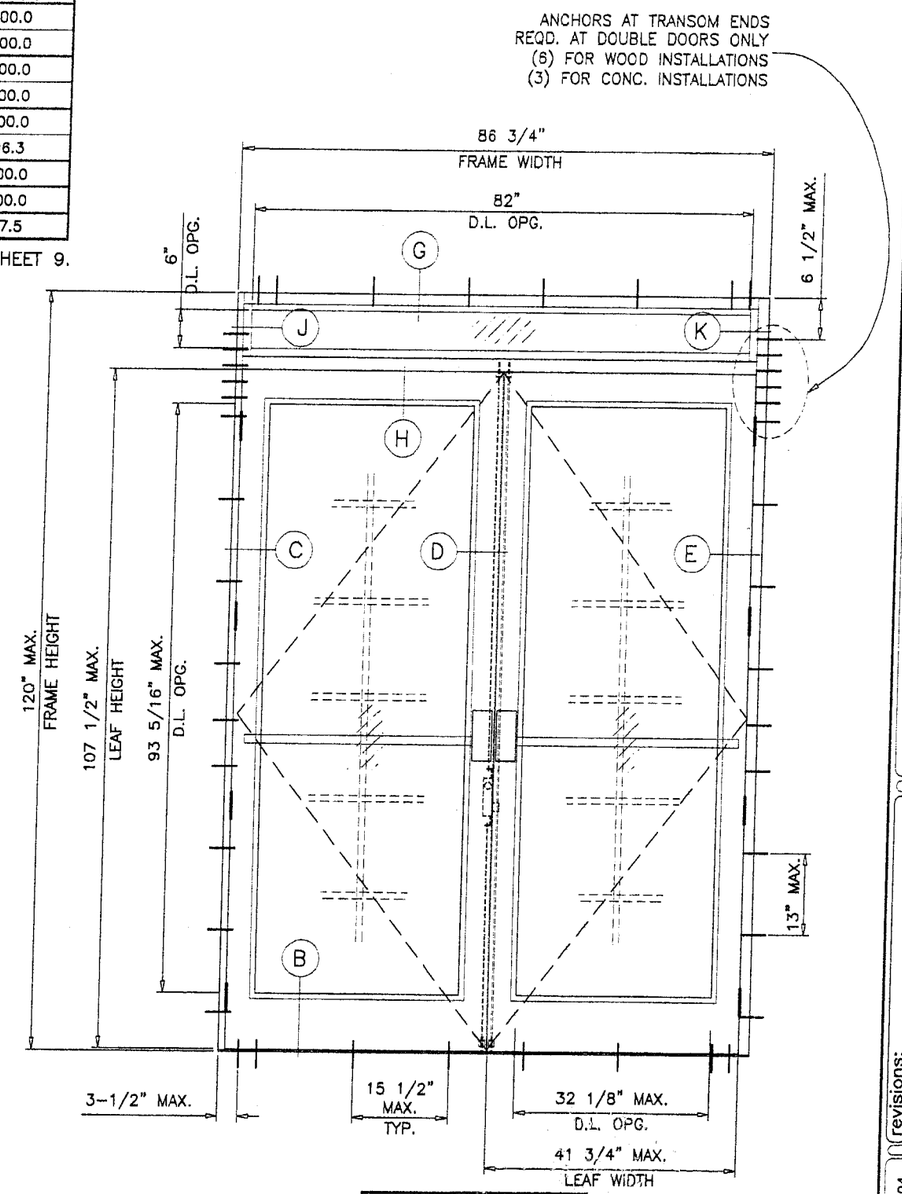

SINGLE ENTRANCE DOORS WITH TRANSOM

DESIGN LOAD CAPACITY – PSF

NOMINAL DIMS.			LOCK OPTION 1	LOCK OPTION 2	
			LOCK STILE REINFORCED	LOCK STILE UN-REINFORCED	LOCK STILE REINFORCED
OPNG. WIDTH INCHES	DOOR HEIGHT INCHES	TRANSOM HEIGHT INCHES	EXT. (+) INT. (–)	EXT. (+) INT. (–)	EXT. (+) INT. (–)
32 TO 44	80 TO 108	6 TO 40	70.0	75.0	100.0

Approved as complying with the Florida Building Code
Date 02/10/05
NOA# 04-1123.01
Miami-Dade Product Control Division
By M. Shade

Engr: DR. HUMAYOUN FAROOQ
STRUCTURES
FLA. PE # 16557
C.A.N. 3538

NOV 18 2004

AL-FAROOQ CORPORATION
ENGINEERS, PLANNERS & PRODUCT DESIGN
1235 SW 87 AVE
MIAMI, FLORIDA 33174
TEL. (305) 264-8100 FAX. (305) 262-6978
COMP-ANL W04-83DD

DH-350 ALUM OUT-SWING ENTRANCE DOOR (IMPACT)

DELTA DOORS
7500 N.W. 69TH AVE.
MIAMI, FL 33166
TEL. (305) 888-0077 FAX. (305) 884-3111

revisions:

no	date	by	description

date: 10-05-04
scale: 1/2"=1'-0"
dr. by: HAMID
chk. by:

drawing no. W04-83

DOOR MULLION LOAD CAPACITY-PSF

WIDTH (W) INCHES	FRAME HEIGHT INCHES	NO REINF. EXT.(+) & INT.(−)	LIGHT REINF. EXT.(+) & INT.(−)	HEAVY REINF. EXT.(+) & INT.(−)
30	82	75.0	100.0	100.0
33		75.0	100.0	100.0
36		75.0	100.0	100.0
39		75.0	100.0	100.0
42		75.0	100.0	100.0
45		75.0	100.0	100.0
48		75.0	100.0	100.0
51		75.0	100.0	100.0
54		75.0	100.0	100.0
57		75.0	100.0	100.0
60		75.0	100.0	100.0
30	86	75.0	100.0	100.0
33		75.0	100.0	100.0
36		75.0	100.0	100.0
39		75.0	100.0	100.0
42		75.0	100.0	100.0
45		75.0	100.0	100.0
48		75.0	100.0	100.0
51		75.0	100.0	100.0
54		75.0	100.0	100.0
57		75.0	100.0	100.0
60		75.0	100.0	100.0
30	92	75.0	100.0	100.0
33		75.0	100.0	100.0
36		75.0	100.0	100.0
39		75.0	100.0	100.0
42		75.0	100.0	100.0
45		75.0	100.0	100.0
48		75.0	100.0	100.0
51		75.0	100.0	100.0
54		75.0	100.0	100.0
57		75.0	100.0	100.0
60		72.8	100.0	100.0
30	98	75.0	100.0	100.0
33		75.0	100.0	100.0
36		75.0	100.0	100.0
39		75.0	100.0	100.0
42		75.0	100.0	100.0
45		72.3	100.0	100.0
48		67.8	100.0	100.0
51		63.8	100.0	100.0
54		–	99.5	100.0
57		–	94.3	100.0
60		–	89.5	100.0
30	104	75.0	100.0	100.0
33		75.0	100.0	100.0
36		75.0	100.0	100.0
39		69.8	100.0	100.0
42		64.8	100.0	100.0
45		60.5	100.0	100.0
48		56.7	99.4	100.0
51		–	93.5	100.0
54		–	88.3	100.0
57		–	83.7	100.0
60		–	79.5	100.0

DOOR MULLION LOAD CAPACITY-PSF

WIDTH (W) INCHES	FRAME HEIGHT INCHES	NO REINF. EXT.(+) & INT.(−)	LIGHT REINF. EXT.(+) & INT.(−)	HEAVY REINF. EXT.(+) & INT.(−)
30	110	75.0	100.0	100.0
33		69.7	100.0	100.0
36		63.9	100.0	100.0
39		59.0	100.0	100.0
42		54.8	100.0	100.0
45		51.1	94.8	100.0
48		–	88.8	100.0
51		–	83.6	100.0
54		–	79.0	100.0
57		–	74.8	100.0
60		–	71.1	97.2
30	116	–	100.0	100.0
33		–	100.0	100.0
36		–	100.0	100.0
39		–	98.3	100.0
42		–	91.3	100.0
45		–	85.2	100.0
48		–	79.9	100.0
51		–	75.2	100.0
54		–	71.0	97.2
57		–	67.3	92.1
60		–	63.9	87.4
30	120	–	100.0	100.0
33		–	100.0	100.0
36		–	99.5	100.0
39		–	91.9	100.0
42		–	85.3	100.0
45		–	79.6	100.0
48		–	74.7	100.0
51		–	70.3	96.1
54		–	66.4	90.8
57		–	62.9	86.0
60		–	59.7	81.7

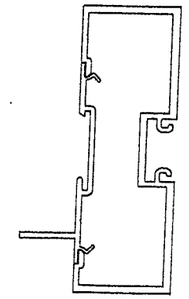

NO REINF.

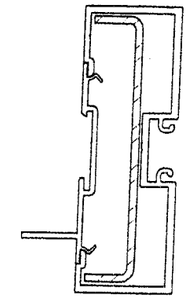

LIGHT REINF.

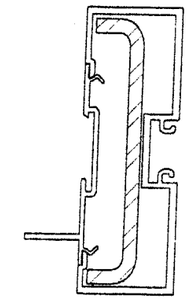

HEAVY REINF.

Approved as complying with the Florida Building Code
Date 02/10/05
NOA# 04-1123.01
Miami-Dade Product Control Division
By

SUBSTRATE	TOTAL NO. OF ANCHORS AT DOOR MULLION HEAD/SILL NO REINF.	LIGHT REINF.	HEAVY REINF.
WOOD	7	10	12
CONCRETE	3	4	5
METAL	3	4	5

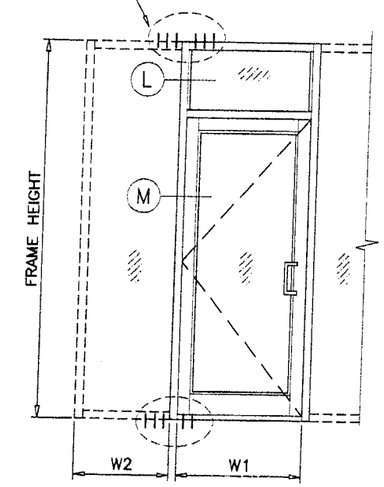

$$\text{WIDTH (W)} = \frac{W1 + W2}{2}$$

SUBSTRATE	TOTAL NO. OF ANCHORS AT DOOR MULLION HEAD/SILL NO REINF.	LIGHT REINF.	HEAVY REINF.
WOOD	1	5	6
CONCRETE	1	2	3
METAL	1	2	3

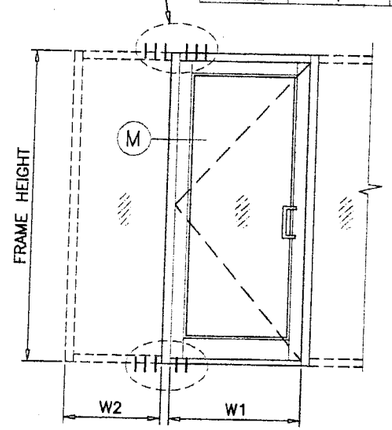

$$\text{WIDTH (W)} = \frac{W1 + W2}{2}$$

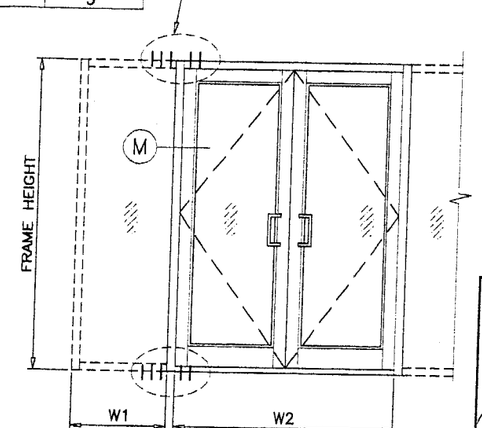

$$\text{WIDTH (W)} = \frac{W1}{2} + \frac{W2}{4}$$

Engr: DR. HUMAYOUN FAROOQ
STRUCTURES
FLA. PE # 16557
C.A.N. 3538

NOV 18 2004

AL-FAROOQ CORPORATION
ENGINEERS, PLANNERS & PRODUCT DESIGN
1235 SW 87 AVE
MIAMI, FLORIDA 33174
TEL. (305) 264-8100 FAX. (305) 262-6978
COMP-ANL\W04-83DD

DH-350 ALUM OUT-SWING ENTRANCE DOOR (IMPACT)

DELTA DOORS
7500 N.W. 69TH AVE.
MIAMI, FL 33166
TEL (305) 888-0077 FAX. (305) 884-3111

revisions:

no	date	by	description

date: 10-05-04
scale: 1/2"=1'-0"
dr. by: HAMID
chk. by:

drawing no. W04-83

DOOR MULLION LOAD CAPACITY - PSF

NOMINAL DIMS.			LIGHT REINF.	HEAVY REINF.
FRAME HEIGHT INCHES	WIDTH (W1) INCHES	WIDTH (W2) INCHES	EXT. (+) INT. (−)	EXT. (+) INT. (−)
90	60	46−1/4	100.0	100.0
		52−1/4	100.0	100.0
		58−1/4	100.0	100.0
		64−1/4	100.0	100.0
	64	46−1/4	100.0	100.0
		52−1/4	100.0	100.0
		58−1/4	100.0	100.0
		64−1/4	100.0	100.0
	72	46−1/4	100.0	100.0
		52−1/4	100.0	100.0
		58−1/4	100.0	100.0
		64−1/4	100.0	100.0
	84	46−1/4	100.0	100.0
		52−1/4	100.0	100.0
		58−1/4	100.0	100.0
		64−1/4	100.0	100.0
96	60	46−1/4	100.0	100.0
		52−1/4	100.0	100.0
		58−1/4	100.0	100.0
		64−1/4	100.0	100.0
	64	46−1/4	100.0	100.0
		52−1/4	100.0	100.0
		58−1/4	100.0	100.0
		64−1/4	100.0	100.0
	72	46−1/4	100.0	100.0
		52−1/4	100.0	100.0
		58−1/4	100.0	100.0
		64−1/4	96.5	100.0
	84	46−1/4	100.0	100.0
		52−1/4	99.8	100.0
		58−1/4	94.7	100.0
		64−1/4	90.2	100.0
102	60	46−1/4	100.0	100.0
		52−1/4	100.0	100.0
		58−1/4	94.4	100.0
		64−1/4	89.3	100.0
	64	46−1/4	100.0	100.0
		52−1/4	97.2	100.0
		58−1/4	91.8	100.0
		64−1/4	87.0	100.0
	72	46−1/4	97.3	100.0
		52−1/4	91.9	100.0
		58−1/4	87.1	100.0
		64−1/4	82.8	100.0
	84	46−1/4	89.6	100.0
		52−1/4	85.0	100.0
		58−1/4	80.9	100.0
		64−1/4	77.1	98.8

DOOR MULLION LOAD CAPACITY - PSF

NOMINAL DIMS.			LIGHT REINF.	HEAVY REINF.
FRAME HEIGHT INCHES	WIDTH (W1) INCHES	WIDTH (W2) INCHES	EXT. (+) INT. (−)	EXT. (+) INT. (−)
108	60	46−1/4	92.1	100.0
		52−1/4	86.8	100.0
		58−1/4	82.0	100.0
		64−1/4	77.7	100.0
	64	46−1/4	89.2	100.0
		52−1/4	84.2	100.0
		58−1/4	79.7	100.0
		64−1/4	75.6	100.0
	72	46−1/4	83.9	100.0
		52−1/4	79.5	100.0
		58−1/4	75.4	100.0
		64−1/4	71.8	100.0
	84	46−1/4	77.1	100.0
		52−1/4	73.3	100.0
		58−1/4	69.9	97.6
114	60	46−1/4	80.5	100.0
		52−1/4	76.0	100.0
		58−1/4	71.9	100.0
		64−1/4	68.2	95.2
	64	46−1/4	77.9	100.0
		52−1/4	73.6	100.0
		58−1/4	69.8	97.5
		64−1/4	66.3	92.6
	72	46−1/4	73.2	100.0
		52−1/4	69.4	96.9
		58−1/4	66.0	92.1
		64−1/4	62.9	87.8
	84	46−1/4	67.0	93.6
		52−1/4	63.8	89.2
120	60	46−1/4	71.0	99.1
		52−1/4	67.0	93.6
		58−1/4	63.5	88.7
		64−1/4	60.3	84.3
	64	46−1/4	68.6	95.8
		52−1/4	64.9	90.7
		58−1/4	61.6	86.1
		64−1/4	58.6	81.9
	72	46−1/4	64.3	89.8
		52−1/4	61.1	85.3
		58−1/4	58.2	81.2
	84	46−1/4	58.8	82.1

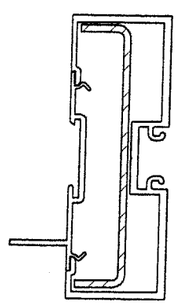

LIGHT REINFORCING

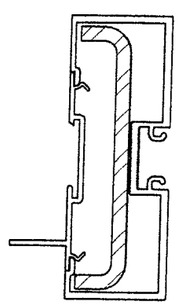

HEAVY REINFORCING

SUBSTRATE	NO. OF ANCHORS AT DOOR MULLION AT EACH SIDE UPTO 75 PSF	UPTO 100 PSF
WOOD	5	7
CONCRETE	2	3
METAL	2	3

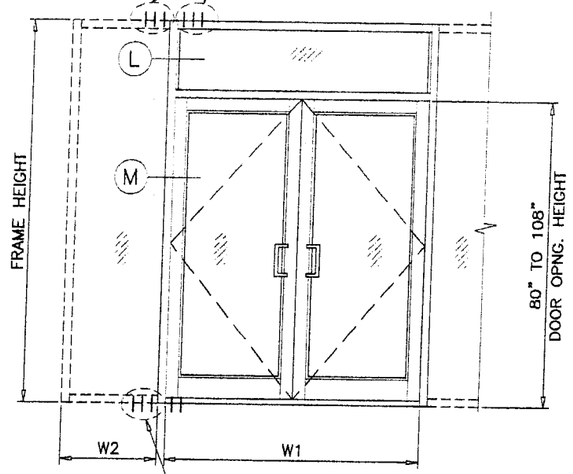

SUBSTRATE	NO. OF ANCHORS AT DOOR MULLION AT FIXED LITE UPTO 75 PSF	UPTO 100 PSF
WOOD	3	6
CONCRETE	2	2
METAL	2	2

Approved as complying with the Florida Building Code
Date 02/10/05
NOA# 04-1123.01
Miami-Dade Product Control Division
By

Engr: DR. HUMAYOUN FAROOQ
STRUCTURES
FLA. PE # 16557
C.A.N. 3538

NOV 1 8 2004

AL-FAROOQ CORPORATION
ENGINEERS, PLANNERS & PRODUCT DESIGN
1235 SW 87 AVE
MIAMI, FLORIDA 33174
TEL. (305) 264-8100 FAX. (305) 262-6978
COMP-ANL\W04-83DD

DH-350 ALUM OUT-SWING ENTRANCE DOOR (IMPACT)

DELTA DOORS
7500 N.W. 69TH AVE.
MIAMI, FL 33166
TEL. (305) 888-0077 FAX. (305) 884-3111

revisions:

no	date	by	description

date: 10-05-04
scale: 1/2"=1'-0"
dr. by: HAMID
chk. by:

drawing no. W04-83

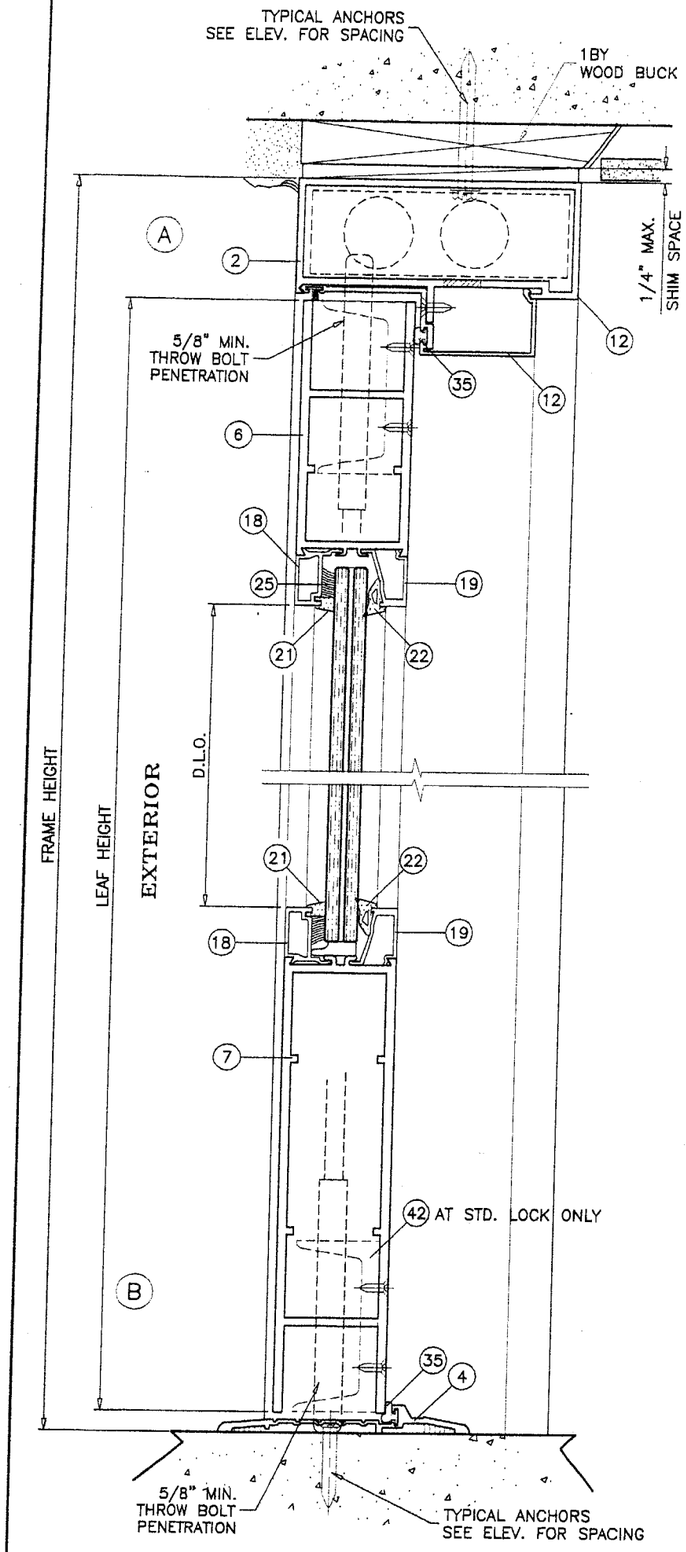

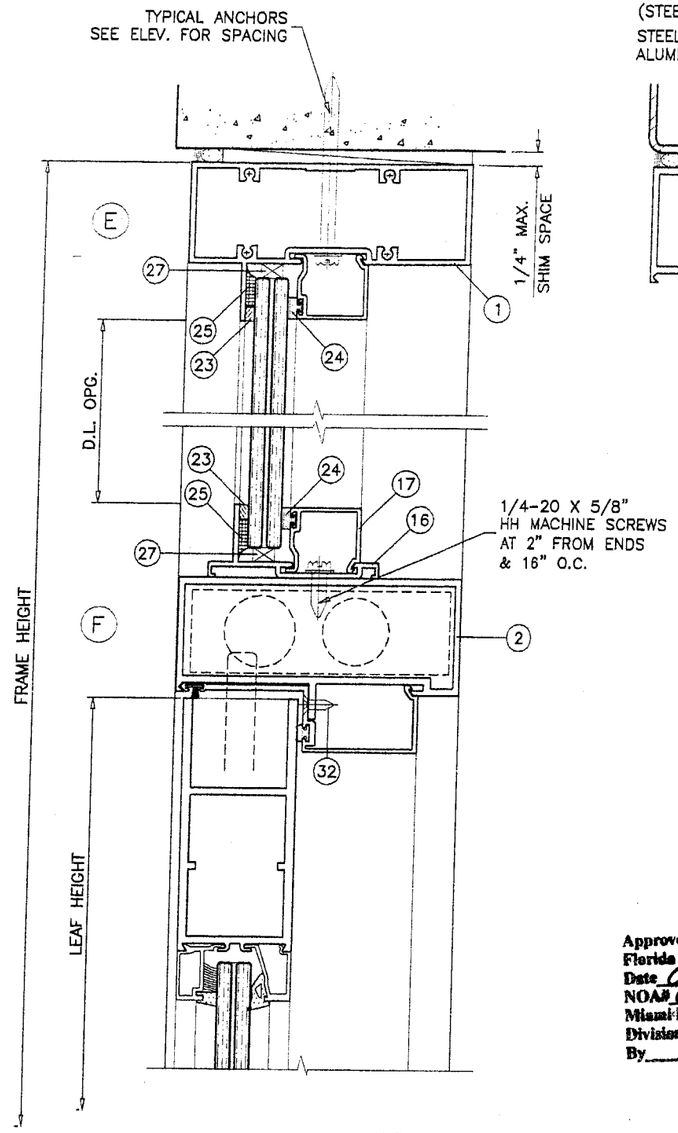

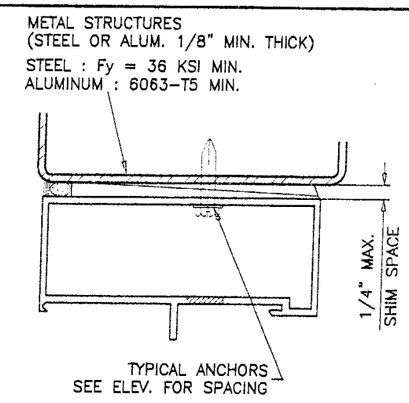

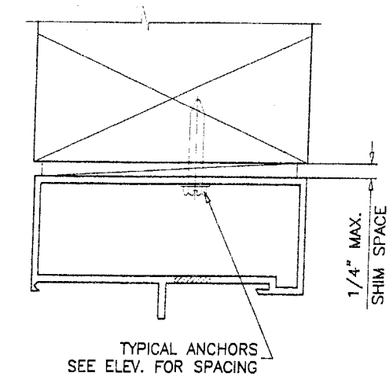

NOTE:

DOOR AND TRANSOM HEAD DETAILS CAN BE INTERCHANGED FOR VARIOUS SUBSTRATES.

WOOD BUCKS NOT BY DELTA DOORS, MUST SUSTAIN LOADS IMPOSED BY GLAZING SYSTEM AND TRANSFER THEM TO THE BUILDING STRUCTURE.

TYPICAL ANCHORS: SEE ELEV. FOR SPACING

1/4" DIA. TAPCONS

INTO 2BY WOOD BUCKS OR WOOD STRUCTURES
1-1/2" MIN. WOOD PENETRATION

THRU 1BY WOOD BUCKS INTO MASONRY OR CONC.
1-1/4" MIN. EMBED INTO MASONRY OR CONC.

1/4" DIA. TAPCONS

DIRECTLY INTO MASONRY OR CONCRETE
1-1/4" MIN. EMBED INTO MASONRY OR CONCRETE

#14" TEKS OR SELF DRILLING SCREWS

INTO METAL STRUCTURES (1/8" MIN. THICKNESS)
INTO APPROVED MULLIONS (NO SHIM SPACE)

TYPICAL EDGE DISTANCE

INTO CONCRETE AND MASONRY = 3" MIN.
INTO WOOD STRUCTURE = 1" MIN.

SEALANTS:

FRAME CORNERS, ASSEMBLY SCREWS AND HEADS OF ANCHOR SCREWS AT SILL TO BE SEALED WITH SEALER. LEAF JOINTS SEALED WITH SILICONE.

Approved as complying with the Florida Building Code
Date 02/10/05
NOA# 04-1123.01
Miami-Dade Product Control Division
By M Khan

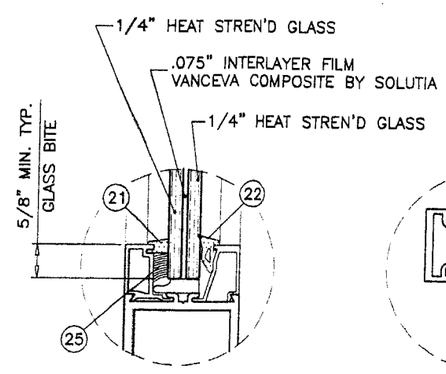

GLAZING DETAIL
DOOR LEAF

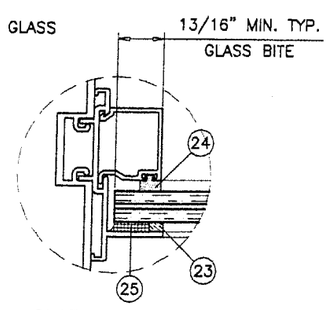

GLAZING DETAIL
FIXED LITE

Engr: DR. HUMAYOUN FAROOQ
STRUCTURES
FLA. PE # 16557
C.A.N. 3538

NOV 1 8 2004

AL-FAROOQ CORPORATION
ENGINEERS, PLANNERS & PRODUCT DESIGN
1235 SW 87 AVE
MIAMI, FLORIDA 33174
TEL. (305) 264-8100 FAX. (305) 262-6978
COMP-ANL\W04-83DD

DH-350 ALUM OUT-SWING ENTRANCE DOOR (IMPACT)

DELTA DOORS
7500 N.W. 69TH AVE.
MIAMI, FL 33166
TEL. (305) 888-0077 FAX. (305) 884-3111

revisions:		
no	date	by description

date: 10-05-04
scale: 3/8" = 1"
dr. by: HAMID
chk. by:

drawing no.
W04-83

NOTE:

DOOR AND TRANSOM JAMB DETAILS CAN BE INTERCHANGED FOR VARIOUS SUBSTRATES.

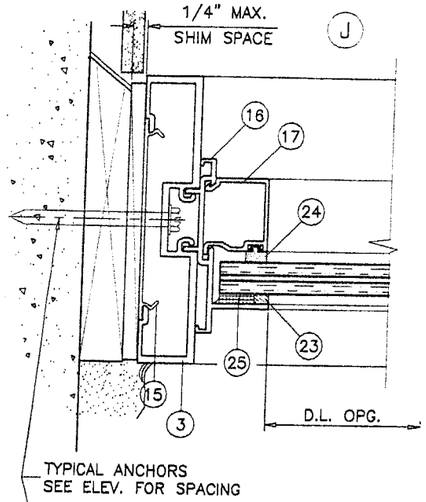

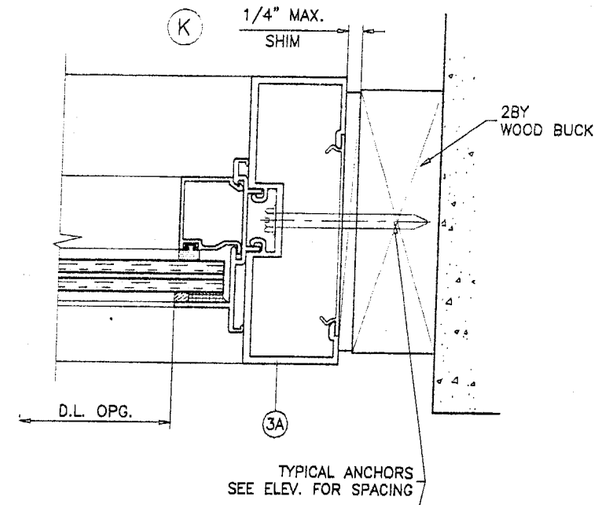

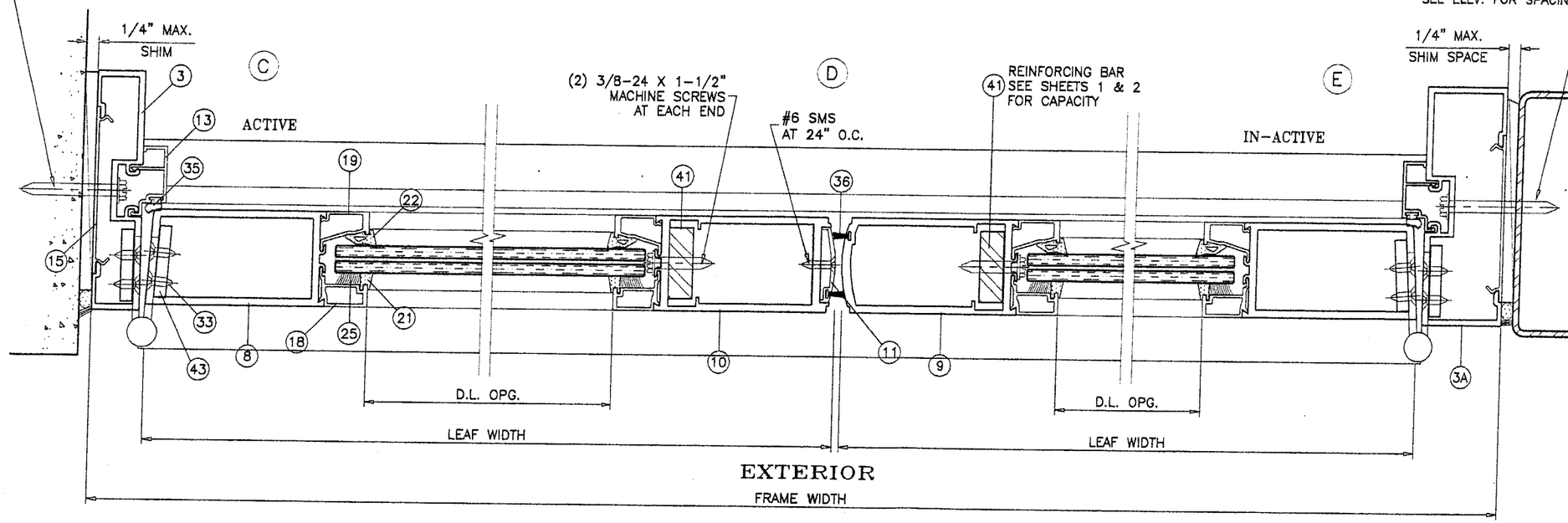

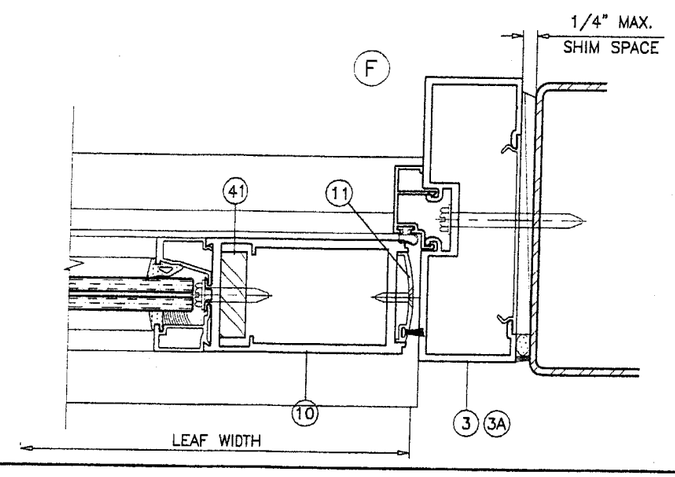

Approved as complying with the Florida Building Code
Date 02/10/05
NOA# 04-1123.01
Miami-Dade Product Control Division
By M Khail

Engr: DR. HUMAYOUN FAROOQ
STRUCTURES
FLA. PE # 16557
C.A.N. 3538

NOV 18 2004

AL-FAROOQ CORPORATION
ENGINEERS, PLANNERS & PRODUCT DESIGN
1235 SW 87 AVE
MIAMI, FLORIDA 33174
TEL. (305) 264-8100 FAX. (305) 262-6978
COMP-ANL\W04-83.DD

DH-350 ALUM OUT-SWING ENTRANCE DOOR (IMPACT)

DELTA DOORS
7500 N.W. 69TH AVE.
MIAMI, FL 33166
TEL. (305) 888-0077 FAX. (305) 884-3111

revisions:			
no	date	by	description

date: 10-05-04
scale: 3/8" = 1"
dr. by: HAMID
chk. by:

drawing no. W04-83

(L)

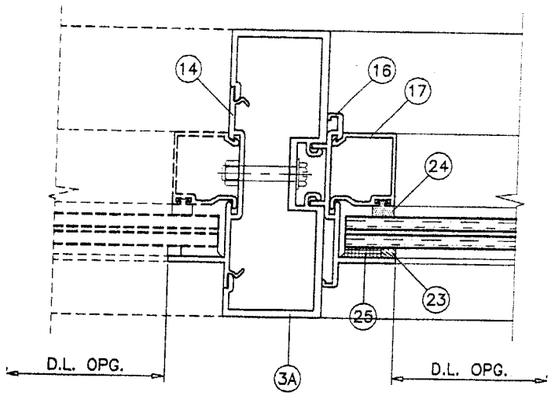

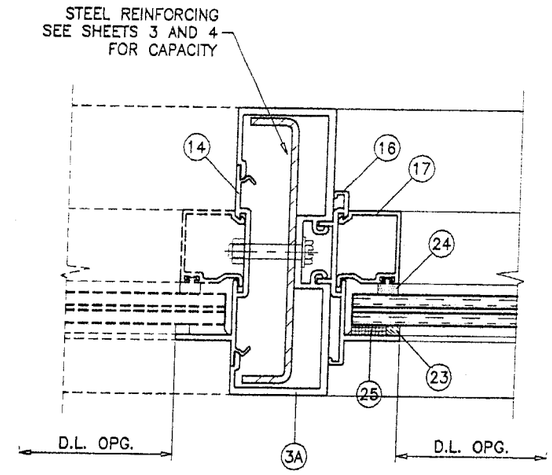

(M)

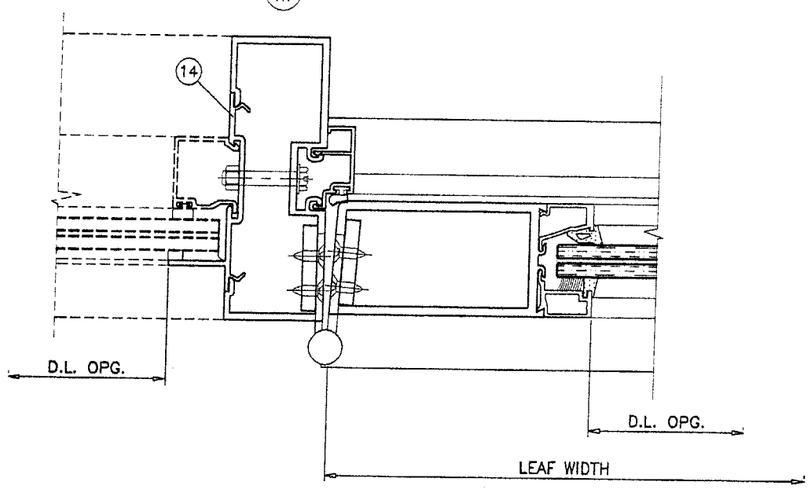

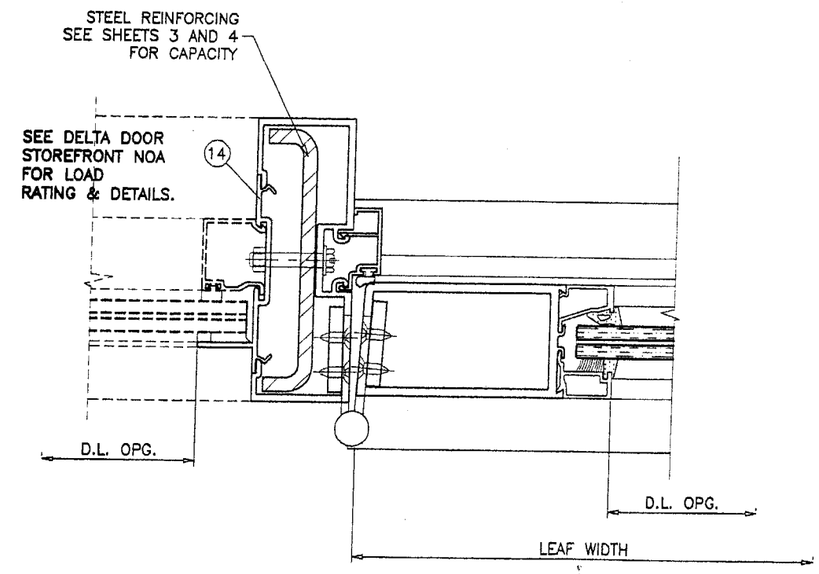

Approved as complying with the Florida Building Code
Date 02/10/05
NOA# 04-1123.01
Miami Dade Product Control Division
By M Shah

Engr: DR. HUMAYOUN FAROOQ
STRUCTURES
FLA. PE # 16557
C.A.N. 3538

NOV 1 8 2004

DH-350 ALUM OUT-SWING ENTRANCE DOOR (IMPACT)

DELTA DOORS
7500 N.W. 69TH AVE.
MIAMI, FL 33166
TEL. (305) 888-0077 FAX. (305) 884-3111

AL-FAROOQ CORPORATION
ENGINEERS, PLANNERS & PRODUCT DESIGN
1235 SW 87 AVE
MIAMI, FLORIDA 33174
TEL. (305) 264-8100 FAX. (305) 262-6978

COMP-ANL\W04-83DD

revisions:

no	date	by	description

date: 10-05-04
scale: 3/8" = 1"
dr. by: HAMID
chk. by:

drawing no.
W04-83

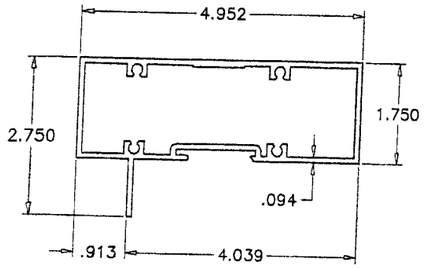

1 FRAME HEAD

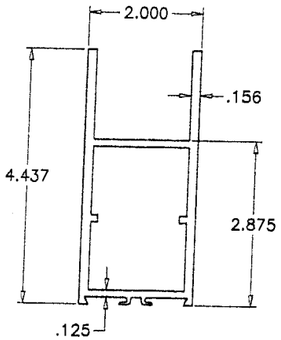

6 TOP RAIL

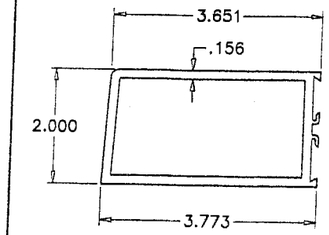

8 HINGE STILE

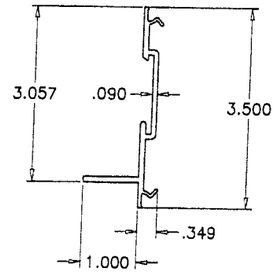

14 POCKET FILLER

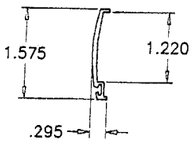

11 LOCK STILE CAP

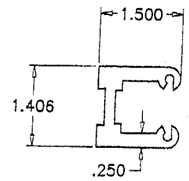

39 SHEAR BLOCK

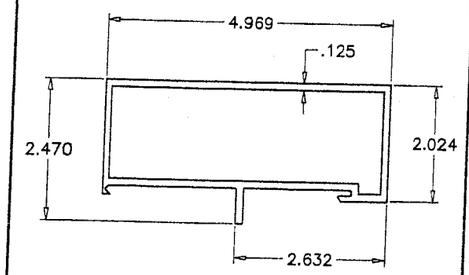

2 DOOR FRAME HEAD

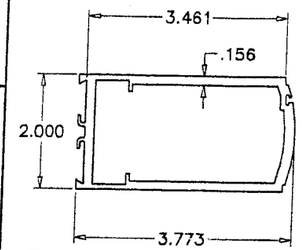

9 LOCK STILE (IN-ACTIVE)

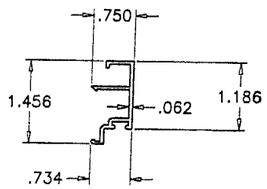

13 DOOR STOP (JAMB)

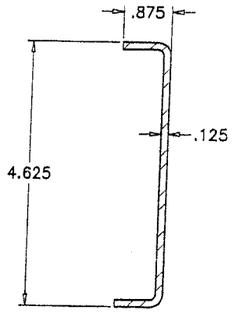

44 REINFORCING CHANNEL LIGHT

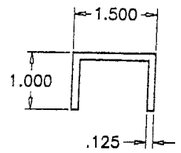

38 SHEAR CLIP

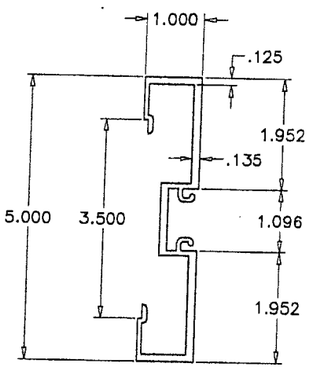

3 FRAME JAMB

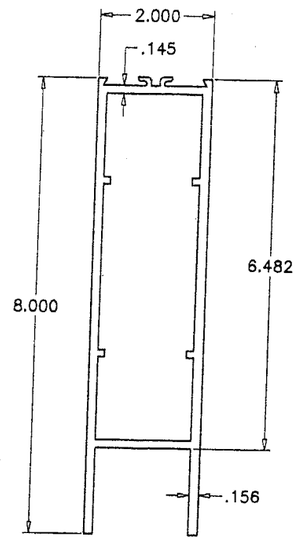

7 BOTTOM RAIL

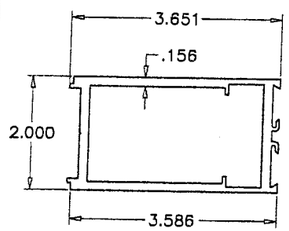

10 LOCK STILE (ACTIVE)

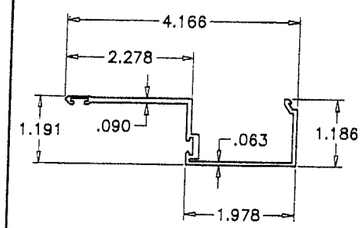

12 DOOR STOP (HEAD)

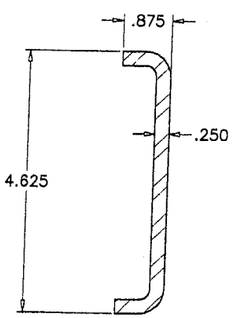

45 REINFORCING CHANNEL HEAVY

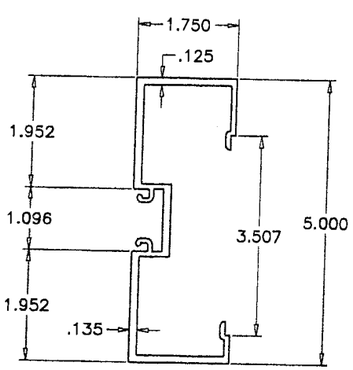

3A ALT. FRAME JAMB

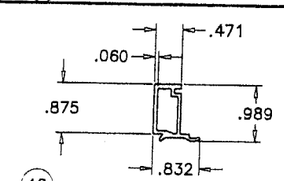

18 EXTERIOR GLASS STOP (DOOR)

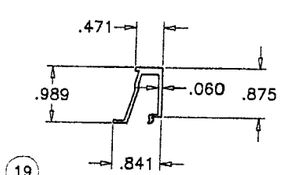

19 INTERIOR GLASS STOP (DOOR)

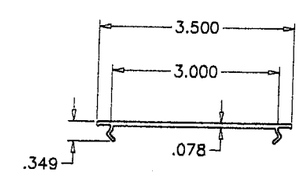

15 FLAT FILLER

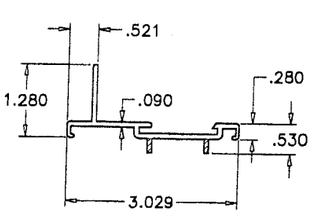

16 GLAZING ADAPTER

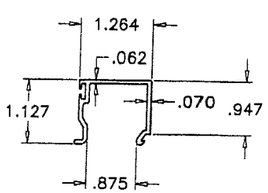

17 INTERIOR GLASS STOP (TRANSOM)

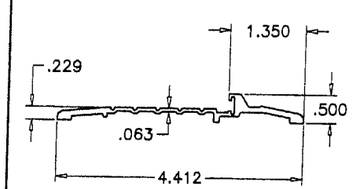

4 BUMPER THRESHOLD

Approved as complying with the Florida Building Code
Date 02/10/05
NOA# 04-1123.01
Miami-Dade Product Control Division
By

Engr: DR. HUMAYOUN FAROOQ
STRUCTURES
FLA. PE # 16557
C.A.N. 3538

NOV 18 2004

AL-FAROOQ CORPORATION
ENGINEERS, PLANNERS & PRODUCT DESIGN
1235 SW 87 AVE
MIAMI, FLORIDA 33174
TEL. (305) 264-8100 FAX. (305) 262-6978
COMP-ANL W04-83DD

DH-350 ALUM OUT-SWING ENTRANCE DOOR (IMPACT)

DELTA DOORS
7500 N.W. 69TH AVE.
MIAMI, FL 33166
TEL. (305) 888-0077 FAX. (305) 884-3111

revisions:

no	date	by	description

date: 10-05-04
scale: 3/8" = 1"
dr. by: HAMID
chk. by:

drawing no. W04-83

sheet 8 of 10

LOCK OPTIONS SINGLE DOORS:

OPTION #1: (PANIC HARDWARE)

1490 CONCEALED VERTICAL PANIC EXIT DEVICE WITH
2 POINT LOCK BY DOR-O-MATIC.
KEY OPERATED ON EXTERIOR.
AT 40-1/2" FROM BOTTOM.

OPTION #2: (STANDARD HARDWARE)

3 POINT LOCK SYSTEM WITH 8 PLY MORTISE
HOOK LOCK AND 1/2" DIA. BOLT BY REGENT.
KEY OPERATED ON EXTERIOR AND THUMB TURN
OPERATOR ON INTERIOR.
LOCK AT 42" FROM BOTTOM.
THROW BOLTS AT TOP & BOTTOM.

LOCK OPTIONS DOUBLE DOORS:

OPTION #1: (PANIC HARDWARE)

ACTIVE LEAF:

1490 CONCEALED VERTICAL PANIC EXIT DEVICE WITH
2 POINT LOCK BY DOR-O-MATIC.
KEY OPERATED ON EXTERIOR.
AT 40-1/2" FROM BOTTOM.

INACTIVE LEAF

1490 CONCEALED VERTICAL PANIC EXIT DEVICE WITH
2 POINT LOCK BY DOR-O-MATIC.
AT 40-1/2" FROM BOTTOM.

OPTION #2: (STANDARD HARDWARE)

ACTIVE LEAF:

3 POINT LOCK SYSTEM WITH 8 PLY MORTISE
HOOK LOCK AND 1/2" DIA. BOLT BY REGENT.
KEY OPERATED ON EXTERIOR AND THUMB TURN
OPERATOR ON INTERIOR.
LOCK AT 42" FROM BOTTOM.
THROW BOLTS AT TOP & BOTTOM.

INACTIVE LEAF

2 POINT LOCK SYSTEM WITH
1/2" DIA. BOLT BY REGENT.
THUMB TURN OPERATOR ON INTERIOR AT 42" FROM
BOTTOM.

THROW BOLTS AT TOP & BOTTOM.

HINGES:

4-1/2 X 4" TWO PIECE STEEL BUTT HINGES
AT 8" FROM TOP AND BOTTOM AND 31" O.C. MAX.

ITEM #	PART #	REQD.	DESCRIPTION	MATERIAL	MANF./SUPPLIER/REMARKS
1	DLD-103	AS REQD.	FRAME HEAD	6063-T5	–
2	DLD-105	1	DOOR FRAME HEAD	6063-T5	–
3	DLD-119	2/DOOR	FRAME JAMB	6063-T6	–
3A	DLD-124	2/DOOR	ALT. FRAME JAMB	6063-T6	–
4	DLD-111	1	FRAME SILL	6063-T5	–
5	–	–	–	–	–
6	DLD-107	1/ LEAF	TOP RAIL	6063-T5	–
7	DLD-110	1/ LEAF	BOTTOM RAIL	6063-T5	–
8	DLD-114	1/ LEAF	HINGE STILE	6063-T5	–
9	DLD-115	1/ LEAF	LOCK STILE (IN-ACTIVE)	6063-T5	–
10	DLD-116	1/ LEAF	LOCK STILE (ACTIVE)	6063-T5	–
11	DLD-117	1	CAP AT LOCKED STILE	6063-T5	–
12	DLD-106	1	DOOR STOP AT HEAD	6063-T5	–
13	BCE-460	2/ DOOR	DOOR STOP AT JAMB	6063-T5	–
14	DLD-101	AS REQD.	POCKET FILLER	6063-T5	–
15	BCE-475	AS REQD.	FLAT FILLER	6063-T5	–
16	DLD-125	AS REQD.	GLAZING ADAPTOR	–	–
17	DLD-102	AS REQD.	INTERIOR GLASS STOP TRANSOM	6063-T5	–
18	DLD-108	4/ LEAF	EXTERIOR GLASS STOP DOOR	6063-T5	–
19	DLD-109	4/ LEAF	INTERIOR GLASS STOP DOOR	6063-T5	–
20	–	–	–	–	–
21	–	AS REQD.	GASKET	–	TR-5399S 70 DUROMETER SILICONE
22	–	AS REQD.	GASKET	–	TR-3235E 70 DUROMETER EPDM
23	2100	AS REQD.	GLAZING TAPE	–	–
24	GG-75	AS REQD.	INTERIOR SPACER	–	IMPACT SYS.
25	DOW 995	AS REQD.	GLAZING COMPOUND	SILICONE	DOW 995
26	–	–	–	–	–
27	1350	AS REQD.	SETTING BLOCK	–	–
28	–	–	–	–	–
29	#12 X 1-1/4"	AS REQD.	FRAME ASSEMBLY SCREWS	–	P.H. SMS
30	#12 X 1-3/4"	AS REQD.	FRAME ASSEMBLY SCREWS	–	F.H. SMS
31	1/4-20 X 5/8"	AS REQD.	FRAME ASSEMBLY SCREWS	–	H.H. MACHINE SCREWS
32	10-24 X 1/2"	4/ LEAF	DOOR STOP SCREWS	–	F.H. MACHINE SCREWS
33	12-24 X 1/2"	4/ HASP	HINGE INSTALLATION SCREWS	–	F.H. MACHINE SCREWS
34	–	–	–	–	–
35	BW-75	–	BULB WEATHERSTRIPPING	VINYL	.375"H X .270 T-SLOT
36	T4216-K	–	PILE WITH FIN WEATHERSTRIPPING	–	ULTRAFAB
37	–	–	–	–	–
38	–	–	SHEAR CLIP, 4-1/2" LONG	ALUMINUM	–
39	DH-4	–	SHEAR BLOCK	6063-T5	–
40	–	2	3 X 2 X 1/8" ANGLE, 1-3/4" LONG	ALUMINUM	–
41	–	AS REQD.	REINFORCING BAR, FULL LENGTH	STEEL	1-1/2" X 1/2"
42	–	2/ LEAF	FLUSH BOLT GUIDE CHANNEL	ALUMINUM	3" LONG
43	–	2/ HINGE	HINGE REINFORCING PLATES	ALUMINUM	1-1/2" X 1/4" X 8" LONG
44	–	AS REQD.	REINFORCING CHANNEL (LIGHT)	STEEL	–
45	–	AS REQD.	REINFORCING CHANNEL (HEAVY)	STEEL	–

Approved as complying with the
Florida Building Code
Date 02/10/05
NOA# 04-1123.01
Miami-Dade Product Control
Division
By M Khan

Engr: DR. HUMAYOUN FAROOQ
STRUCTURES
FLA. PE # 16557
C.A.N. 3538

NOV 18 2004

AL-FAROOQ CORPORATION
ENGINEERS, PLANNERS & PRODUCT DESIGN
1235 SW 87 AVE
MIAMI, FLORIDA 33174
TEL. (305) 264-8100 FAX. (305) 262-6978
COMP-ANL\W04-83DD

DH-350 ALUM. OUT-SWING ENTRANCE DOOR (IMPACT)

DELTA DOORS
7500 N.W. 69TH AVE.
MIAMI, FL 33166
TEL. (305) 888-0077 FAX. (305) 884-3111

revisions:

no	date	by	description

date: 10-05-04
scale: 3/8" = 1"
dr. by: HAMID
chk. by:

drawing no.
W04-83

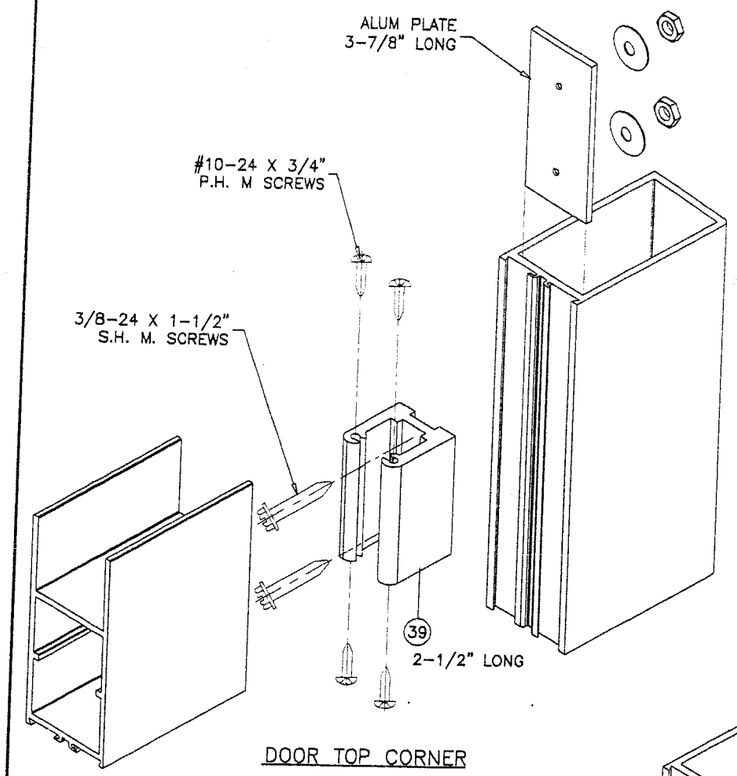

DOOR TOP CORNER

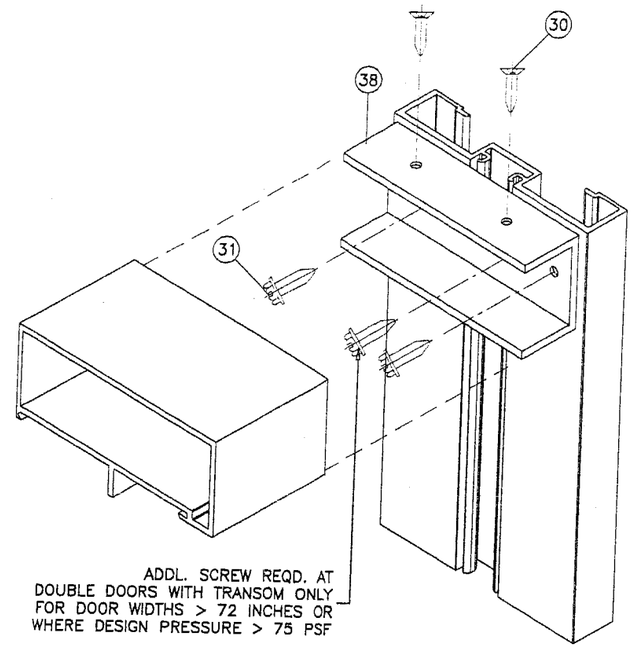

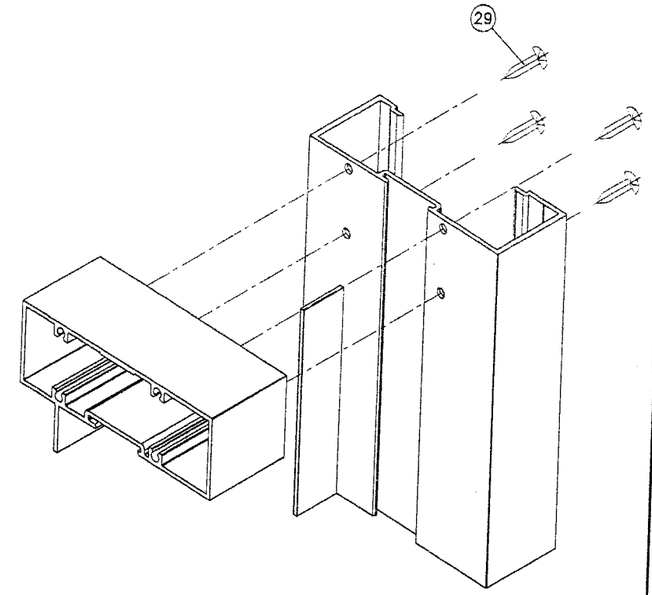

FRAME TOP CORNER

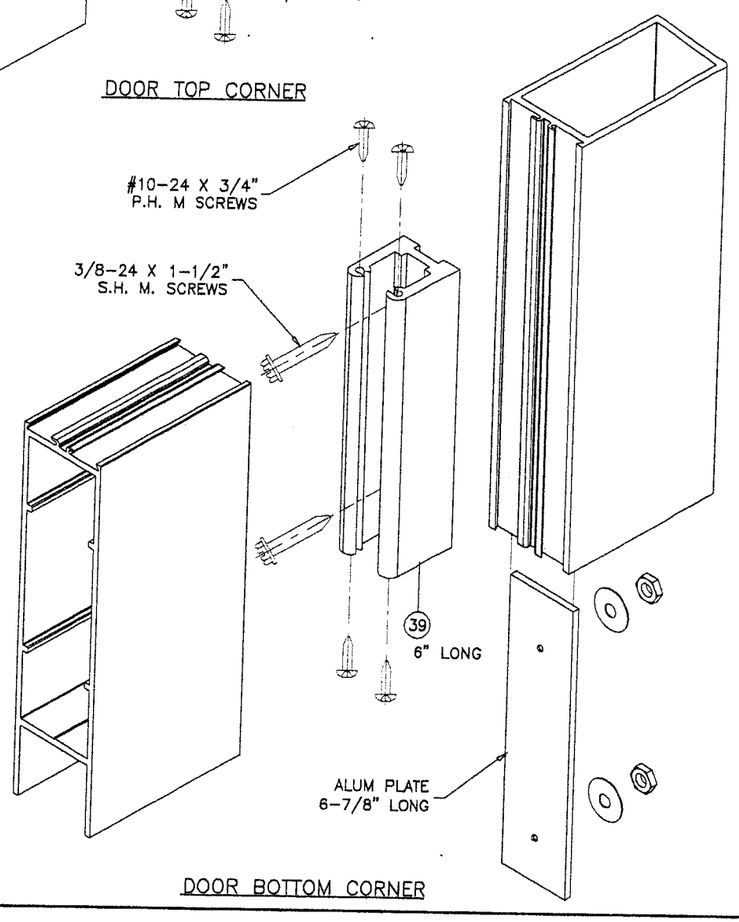

DOOR BOTTOM CORNER

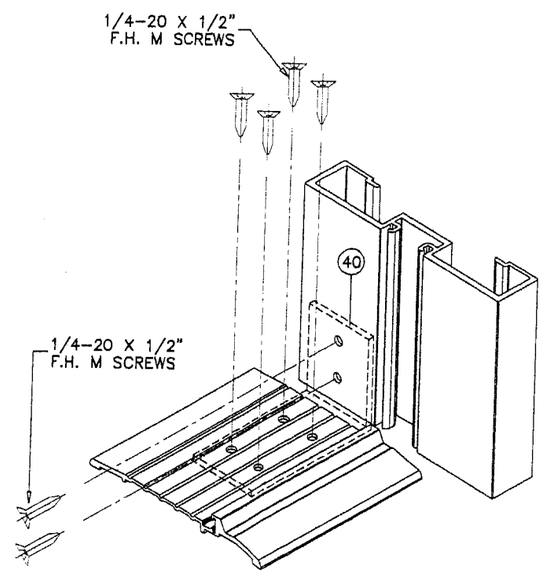

FRAME BOTTOM CORNER

Approved as complying with the
Florida Building Code
Date 02/10/05
NOA# 04-1122.01
Miami-Dade Product Control
Division
By

Engr: DR. HUMAYOUN FAROOQ
STRUCTURES
FLA. PE # 16557
C.A.N. 3538

NOV 1 8 2004

AL-FAROOQ CORPORATION
ENGINEERS, PLANNERS & PRODUCT DESIGN
1235 SW 87 AVE
MIAMI, FLORIDA 33174
TEL. (305) 264-8100 FAX. (305) 262-6978
COMP-ANL\W04-83DD

DH-350 ALUM OUT-SWING ENTRANCE DOOR (IMPACT)

DELTA DOORS
7500 N.W. 69TH AVE.
MIAMI, FL 33166
TEL. (305) 888-0077 FAX. (305) 884-3111

revisions:			
no	date	by	description

date: 10-05-04
scale: 3/8" = 1"
dr. by: HAMID
chk. by:

drawing no.
W04-83