MIAMI-DADE COUNTY
BUILDING CODE COMPLIANCE OFFICE (BCCO)
PRODUCT CONTROL DIVISION

MIAMI-DADE COUNTY, FLORIDA
METRO-DADE FLAGLER BUILDING
140 WEST FLAGLER STREET, SUITE 1603
MIAMI, FLORIDA 33130-1563
(305) 375-2901 FAX (305) 375-2908

NOTICE OF ACCEPTANCE (NOA)

EGS International LLC
3133 SW 25th Street
Pembroke Park, FL 33009

SCOPE:

This NOA is being issued under the applicable rules and regulations governing the use of construction materials. The documentation submitted has been reviewed by Miami-Dade County Product Control Division and accepted by the Board of Rules and Appeals (BORA) to be used in Miami Dade County and other areas where allowed by the Authority Having Jurisdiction (AHJ).

This NOA shall not be valid after the expiration date stated below. The Miami-Dade County Product Control Division (In Miami Dade County) and/or the AHJ (in areas other than Miami Dade County) reserve the right to have this product or material tested for quality assurance purposes. If this product or material fails to perform in the accepted manner, the manufacturer will incur the expense of such testing and the AHJ may immediately revoke, modify, or suspend the use of such product or material within their jurisdiction. BORA reserves the right to revoke this acceptance, if it is determined by Miami-Dade County Product Control Division that this product or material fails to meet the requirements of the applicable building code.

This product is approved as described herein, and has been designed to comply with the Florida Building Code, including the High Velocity Hurricane Zone.

DESCRIPTION: Series Atlantic 130 Aluminum Sliding Glass Door-N.I.

APPROVAL DOCUMENT: Drawing No. **W04-95** titled "Atlantic Series NI 130 Alum. Sliding Glass Door ", sheets 1 through 8 of 8, prepared by AL-Farooq Corporation, dated by 09/10/04, signed and sealed by Humayoun Farooq, P.E., bearing the Miami-Dade County Product Control Revision stamp with the Notice of Acceptance number and expiration date by the Miami-Dade County Product Control Division.

MISSILE IMPACT RATING: None

LABELING: Each unit shall bear a permanent label with the manufacturer's name or logo, city, state and following statement: "Miami-Dade County Product Control Approved", unless otherwise noted herein.

RENEWAL of this NOA shall be considered after a renewal application has been filed and there has been no change in the applicable building code negatively affecting the performance of this product.

TERMINATION of this NOA will occur after the expiration date or if there has been a revision or change in the materials, use, and/or manufacture of the product or process. Misuse of this NOA as an endorsement of any product, for sales, advertising or any other purposes shall automatically terminate this NOA. Failure to comply with any section of this NOA shall be cause for termination and removal of NOA.

ADVERTISEMENT: The NOA number preceded by the words Miami-Dade County, Florida, and followed by the expiration date may be displayed in advertising literature. If any portion of the NOA is displayed, then it shall be done in its entirety.

INSPECTION: A copy of this entire NOA shall be provided to the user by the manufacturer or its distributors and shall be available for inspection at the job site at the request of the Building Official.

This NOA **revises NOA # 01-0516.02** and consists of this page 1 and evidence pages E-1, and E-2, as well as approval document mentioned above

The submitted documentation was reviewed by **Herminio F. Gonzalez, P.E., Director, BCCO**

PRODUCT CONTROL ACCEPTED 3/11/05

EGS International, LLC

NOTICE OF ACCEPTANCE: EVIDENCE SUBMITTED

A. DRAWINGS

1. Manufacturer's die drawings and sections.
2. Drawing No **W04-95**, titled "Atlantic Series NI 130 Alum.Sliding Glass Door", Sheets 1 through 8 of 8, prepared by AL-Farooq Corporation dated 09/10/04, signed and sealed by Humayoun Farooq, P.E.

B. TESTS

1. Test reports on 1) Air Infiltration Test, per FBC, TAS 202-94
   2) Uniform Static Air Pressure Test, Loading per FBC, TAS 202-94
   3) Water Resistance Test, per FBC, TAS 202-94
   4) Forced Entry Test, per FBC 2411 3.2.1 (b) and TAS 202-94
   along with marked-up drawings and installation diagram of an aluminum sliding glass door, prepared by Fenestration Testing Laboratory, Inc., Test Report No. **FTL -97028,** dated 05/07/97, signed and sealed by late Gilbert Diamond, P.E.
   "Submitted under NOA# 01-0516.02"
2. Test reports on 1) Air Infiltration Test, per FBC, TAS 202-94
   2) Uniform Static Air Pressure Test, Loading per FBC, TAS 202-94
   3) Water Resistance Test, per FBC, TAS 202-94
   4) Forced Entry Test, per FBC 2411 3.2.1 (b) and TAS 202-94
   along with marked-up drawings and installation diagram of an aluminum sliding glass door, prepared by Fenestration Testing Laboratory, Inc., Test Report No. **FTL -1622,** dated 05/07/97, signed and sealed by late Gilbert Diamond, P.E.
3. Test reports on 1) Air Infiltration Test, per FBC, TAS 202-94
   2) Uniform Static Air Pressure Test, Loading per FBC, TAS 202-94
   3) Water Resistance Test, per FBC, TAS 202-94
   4) Forced Entry Test, per FBC 2411 3.2.1 (b) and TAS 202-94
   along with marked-up drawings and installation diagram of an aluminum sliding glass door, prepared by Fenestration Testing Laboratory, Inc., Test Report No. **FTL -4182,** dated 05/14/04, signed and sealed by Edmundo Largaespada, P.E.

C. CALCULATIONS

1. Anchor Calculations and structural analysis, prepared by Robert E. Fisher-Wm. M. Meyers, P.E., Consulting Engineers, dated 10-31-97 and revised on 05-06-98, signed and sealed by Wm. M. Meyers, P.E.
   "Submitted under NOA# 01-0516.02"
2. Anchor Calculations, ASTM-E1300, and structural analysis, prepared by AL-Farooq Corporation, dated 11/17/04, signed and sealed by Humayoun Farooq, P.E.

D. QUALITY ASSURANCE

1. Miami Dade Building Code Compliance Office (BCCO).

for

Herminio F. Gonzalez, P.E.
Director, Building Code Compliance Office
NOA No 04-1129.02
Expiration Date: July 30, 2006
Approval Date: March 31, 2005

NOTICE OF ACCEPTANCE: EVIDENCE SUBMITTED

E. MATERIAL CERTIFICATIONS

1. Notice of Acceptance No.03-0421.02 for" Saflex IIIG PVB Polyvinyl Brutryal Interlayer" issued to Solutia Inc., approved on 01/08/04 with expiration date of 05/21/06.

F. STATEMENTS

1. Statement letter of compliance and no financial interest, dated September 28, 2004, signed and sealed by Humayoun Farooq, P.E.

G. OTHER

1. Letter from the consultant stating that the product is in compliance with the Florida Building Code.
2. Notice of Acceptance No. **01-0516.02**, issued to EGS International LLC for their "Atlantic Series Sliding Glass Door-(Non-Impact / Small Missile Impact", approved on 07/05/01 and expiring on 07/30/06.

for

Herminio F. Gonzalez, P.E.
Director, Building Code Compliance Office
NOA No 04-1129.02
Expiration Date: July 30, 2006
Approval Date: March 31, 2005

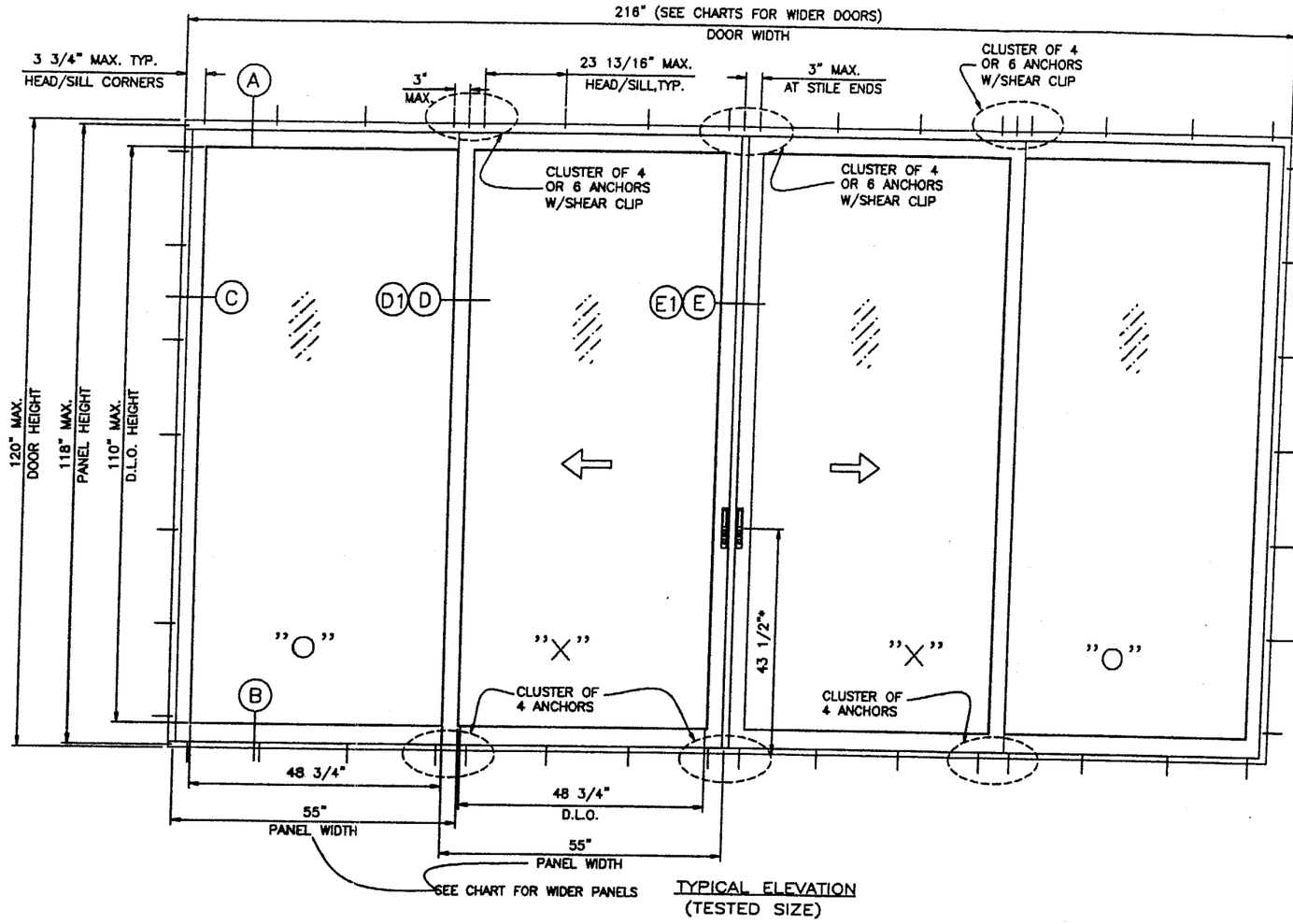

TYPICAL ELEVATION
(TESTED SIZE)

DOORS GLAZED WITH 1/4" TEMPERED GLASS ARE NOT RATED FOR IMPACT AND REQUIRE MIAMI DADE COUNTY APPROVED SHUTTERS IF INSTALLED IN THE HVHZ.

INSTALLATION OF THIS SYSTEM OUTSIDE THE HVHZ AREA SHALL MEET THE APPLICABLE REQUIREMENTS FOR WIND BORNE DEBRIS PROTECTION.

ATLANTIC SERIES NI 130 ALUM. SLIDING GLASS DOOR

APPROVED CONFIGURATIONS SHOWN BELOW.

THIS PRODUCT IS DESIGNED TO COMPLY WITH THE HIGH VELOCITY HURRICANE ZONE OF THE 2001 FLORIDA BUILDING CODE.

WOOD BUCKS BY OTHERS, MUST BE ANCHORED PROPERLY TO TRANSFER LOADS TO THE STRUCTURE.

ANCHORS SHALL BE AS LISTED, SPACED AS SHOWN ON DETAILS. ANCHOR EMBEDMENT TO BASE MATERIAL SHALL BE BEYOND WALL DRESSING OR STUCCO.

ALL STEEL IN CONTACT WITH ALUMINUM TO BE PAINTED OR PLATED.

ANCHORING OR LOADING CONDITIONS NOT SHOWN IN THESE DETAILS ARE NOT PART OF THIS APPROVAL.

A 33% INCREASE IN ALLOWABLE STRESS HAS BEEN USED IN DESIGN OF ANCHORS.

ALL DOOR INSTALLATIONS MUST BE IN ACCORDANCE WITH EGS INSTALLATION INSTRUCTIONS. ALL SEALANTS TO BE TREMCO SPECTREM 2 OR EQUAL. (EQUAL SEALANTS MUST BE TESTED BY SEALANT MANUFACTURER FOR COMPATIBILITY & ADHESION).

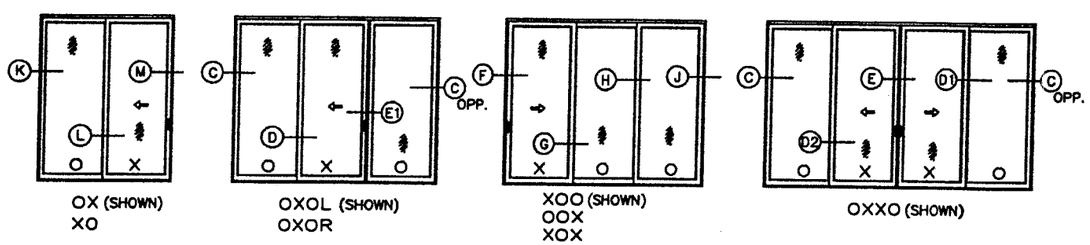

OX (SHOWN)
XO

OXOL (SHOWN)
OXOR

XOO (SHOWN)
OOX
XOX

OXXO (SHOWN)

APPROVED CONFIGURATIONS

TWO TRACK FRAME DOOR CONFIGURATIONS OF MORE THAN FOUR PANELS USING STILE COMBINATIONS SHOWN IN THESE DETAILS MAY ALSO BE APPROVED (EXAMPLE OOXXOO).

PRODUCT REVISED
as complying with the Florida Building Code
Acceptance No. 04-112902
Expiration Date 03/30/04
By [signature]
Miami Dade Product Control Division

Engr: DR. HUMAYOUN FAROOQ
STRUCTURES
FLA. PE # 16557
C.A.N. 3538

FEB 28 2005

AL-FAROOQ CORPORATION
ENGINEERS, PLANNERS & PRODUCT DESIGN
1235 SW 87 AVE
MIAMI, FLORIDA 33174
TEL. (305) 264-8100 FAX. (305) 262-6978
EGS\NI\W04-95EGS

ATLANTIC SERIES NI 130 ALUM. SLIDING GLASS DOOR

EGS INTERNATIONAL, LLC
3133 S.W. 25TH STREET
PEMBROKE PARK, FL. 33009
TEL. (954) 964-1441 FAX. (954) 964-1533

revisions:			
no	date	by	description

date: 9-10-04
scale: 1/2"=1'-0"
dr. by: KAY
chk. by:

drawing no.
W04-95

NON IMPACT RESISTANT DOORS

NO. IN PARENTHESIS INDICATE CLUSTER OF 4 OR 6 ANCHORS AT INTERLOCKS OR ASTRAGAL

DESIGN LOAD CAPACITY – PSF

DOORS W/REINFORCED INTERLOCKS & 1/4" TEMP. GLASS

PANEL WIDTH NOMINAL FT./IN.	DOOR HEIGHT FT./IN.	COLUMN 'A' (4)		COLUMN 'A' (6)		COLUMN 'B' (4)		COLUMN 'B' (6)		COLUMN 'C' (4)	
		EXT. (+)	INT. (–)	EXT. (+)	INT. (–)	EXT. (+)	INT. (–)	EXT. (+)	INT. (–)	EXT. (+)	INT. (–)
2/0	7/0	132.0	132.0	133.3	198.0	133.3	160.0	133.3	210.0	133.3	210.0
2/6		110.2	110.2	133.3	165.3	133.3	133.6	133.3	200.3	133.3	210.0
3/0		96.0	96.0	133.3	144.0	116.4	116.4	133.3	157.2	133.3	157.2
3/6		86.2	86.2	129.3	129.3	104.5	104.5	133.3	135.2	133.3	135.2
4/0		79.2	79.2	118.8	118.8	96.0	96.0	128.0	128.0	128.0	128.0
4/2		77.3	77.3	116.0	116.0	93.7	93.7	126.4	126.4	126.4	126.4
4/6		74.1	74.1	111.2	111.2	89.8	89.8	123.6	123.6	123.6	123.6
4/8		72.7	72.7	109.1	109.1	88.2	88.2	122.0	122.0	122.0	122.0
5/0		70.4	70.4	105.6	105.6	85.3	85.3	118.4	118.4	118.4	118.4
2/0	7/6	121.8	121.8	133.3	182.8	133.3	147.7	133.3	210.0	133.3	210.0
2/6		101.4	101.4	133.3	152.1	122.9	122.9	133.3	184.3	133.3	210.0
3/0		88.0	88.0	132.0	132.0	106.7	106.7	133.3	148.0	133.3	148.0
3/6		78.7	78.7	118.1	118.1	95.4	95.4	123.2	123.2	123.2	123.2
4/0		72.0	72.0	108.0	108.0	87.3	87.3	115.2	115.2	115.2	115.2
4/2		70.2	70.2	105.3	105.3	85.1	85.1	114.0	114.0	114.0	114.0
4/6		67.0	67.0	100.6	100.6	81.3	81.3	112.0	112.0	112.0	112.0
4/8		65.7	65.7	98.5	98.5	79.6	79.6	111.2	111.2	111.2	111.2
5/0		63.4	63.4	95.0	95.0	76.8	76.8	108.8	108.8	108.8	108.8
2/0	8/0	113.1	113.1	133.3	169.7	133.3	137.1	133.3	205.7	133.3	210.0
2/6		93.9	93.9	133.3	140.8	113.8	113.8	133.3	170.7	133.3	210.0
3/0		81.2	81.2	121.8	121.8	98.5	98.5	133.3	141.6	133.3	141.6
3/6		72.4	72.4	108.6	108.6	87.8	87.8	114.0	114.0	114.0	114.0
4/0		66.0	66.0	99.0	99.0	80.0	80.0	104.4	104.4	104.4	104.4
4/2		64.3	64.3	96.4	96.4	77.9	77.9	103.2	103.2	103.2	103.2
4/6		61.2	61.2	91.8	91.8	74.2	74.2	101.6	101.6	101.6	101.6
4/8		59.9	59.9	89.8	89.8	72.6	72.6	101.2	101.2	101.2	101.2
5/0		57.6	57.6	86.4	86.4	69.8	69.8	99.6	99.6	99.6	99.6
2/0	8/6	105.6	105.6	133.3	158.4	128.0	128.0	133.3	192.0	133.3	210.0
2/6		87.4	87.4	131.1	131.1	105.9	105.9	133.3	158.9	133.3	207.2
3/0		75.4	75.4	113.1	113.1	91.4	91.4	133.3	137.1	133.3	137.2
3/6		67.0	67.0	100.6	100.6	81.3	81.3	106.8	106.8	106.8	106.8
4/0		60.9	60.9	91.4	91.4	73.8	73.8	96.0	96.0	96.0	96.0
4/2		59.2	59.2	88.9	88.9	71.8	71.8	94.4	94.4	94.4	94.4
4/6		56.3	56.3	84.5	84.5	68.3	68.3	92.8	92.8	92.8	92.8
4/8		55.0	55.0	82.6	82.6	66.7	66.7	92.4	92.4	92.4	92.4
5/0		52.8	52.8	79.2	79.2	64.0	64.0	91.6	91.6	91.6	91.6
2/0	9/0	99.0	99.0	133.3	148.5	120.0	120.0	133.3	180.0	133.3	210.0
2/6		81.8	81.8	122.6	122.6	99.1	99.1	133.3	148.6	133.3	202.4
3/0		70.4	70.4	105.6	105.6	85.3	85.3	128.0	128.0	133.3	134.0
3/6		62.4	62.4	93.6	93.6	75.7	75.7	101.6	101.6	101.6	101.6
4/0		56.6	56.6	84.9	84.9	68.6	68.6	88.8	88.8	88.8	88.8
4/2		55.0	55.0	82.4	82.4	66.6	66.6	87.2	87.2	87.2	87.2
4/6		52.1	52.1	78.2	78.2	63.2	63.2	85.2	85.2	85.2	85.2
4/8		50.9	50.9	76.4	76.4	61.7	61.7	84.8	84.8	84.8	84.8
5/0		48.7	48.7	73.1	73.1	59.1	59.1	84.4	84.4	84.4	84.4

DESIGN LOAD CAPACITY – PSF

DOORS W/REINFORCED INTERLOCKS & 1/4" TEMP. GLASS

PANEL WIDTH NOMINAL FT./IN.	DOOR HEIGHT FT./IN.	COLUMN 'A' (4)		COLUMN 'A' (6)		COLUMN 'B' (4)		COLUMN 'B' (6)		COLUMN 'C' (4)	
		EXT. (+)	INT. (–)	EXT. (+)	INT. (–)	EXT. (+)	INT. (–)	EXT. (+)	INT. (–)	EXT. (+)	INT. (–)
2/0	9/6	93.2	93.2	133.3	139.8	112.9	112.9	133.3	169.4	133.3	210.0
2/6		76.8	76.8	115.2	115.2	93.1	93.1	133.3	139.6	133.3	197.6
3/0		66.0	66.0	99.0	99.0	80.0	80.0	120.0	120.0	131.6	131.6
3/6		58.4	58.4	87.6	87.6	70.8	70.8	98.0	98.0	98.0	98.0
4/0		52.8	52.8	79.2	79.2	64.0	64.0	83.6	83.6	83.6	83.6
4/2		51.3	51.3	76.9	76.9	62.1	62.1	81.2	81.2	81.2	81.2
4/6		48.6	48.6	72.8	72.8	58.9	58.9	78.8	78.8	78.8	78.8
4/8		47.4	47.4	71.0	71.0	57.4	57.4	78.4	78.4	78.4	78.4
2/0	10/0	88.0	88.0	132.0	132.0	106.7	106.7	133.3	160.0	133.3	210.0
2/6		72.4	72.4	108.6	108.6	87.8	87.8	131.7	131.7	133.3	192.8
3/0		62.1	62.1	93.2	93.2	75.3	75.3	112.9	112.9	129.6	129.6
3/6		54.9	54.9	82.3	82.3	66.5	66.5	95.2	95.2	95.2	95.2
4/0		49.5	49.5	74.3	74.3	60.0	60.0	79.2	79.2	79.2	79.2
4/2		48.0	48.0	72.0	72.0	58.2	58.2	76.4	76.4	76.4	76.4
4/6		45.4	45.4	68.1	68.1	55.1	55.1	73.6	73.6	73.6	73.6

NOTE: NOMINAL PANEL WIDTH IN ALL CHARTS REFERS TO: OVERALL DOOR WIDTH / NO. OF PANELS

PRODUCT REVISED
as complying with the Florida Building Code
Acceptance No. 04-1129.02
Expiration Date: 01/30/06
By: M. Thank
Miami Dade Product Control Division

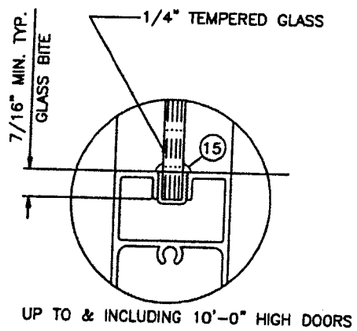

UP TO & INCLUDING 10'–0" HIGH DOORS

SEE SHEET 3 FOR DESCRIPTION OF COLUMN A, B & C FOR ANCHORS

INTERPOLATION BETWEEN WIDTHS ALLOWED.

SHOWN CAPACITIES ARE FOR 4.938" SILL HEIGHTS

LIMIT EXTERIOR(+) LOADS AS FOLLOWS

3.188" SILL HT. = +80.0 PSF
2.500" SILL HT. = +53.3 PSF

Engr: DR. HUMAYOUN FAROOQ
STRUCTURES
FLA. PE # 16557
C.A.N. 3538

FEB 28 2005

AL-FAROOQ CORPORATION
ENGINEERS, PLANNERS & PRODUCT DESIGN
1235 SW 87 AVE
MIAMI, FLORIDA 33174
TEL. (305) 264-8100 FAX. (305) 262-6978
EGS\NI\W04-95EGS

ATLANTIC SERIES NI 130 ALUM. SLIDING GLASS DOOR

EGS INTERNATIONAL, LLC
3133 S.W. 25TH STREET
PEMBROKE PARK, FL. 33009
TEL. (954) 964-1533 FAX. (954) 964-1441

revisions:

no	date	by	description

date: 9-10-04
scale: 1/2"=1'-0"
dr. by: KAY
chk. by:

drawing no. W04-95

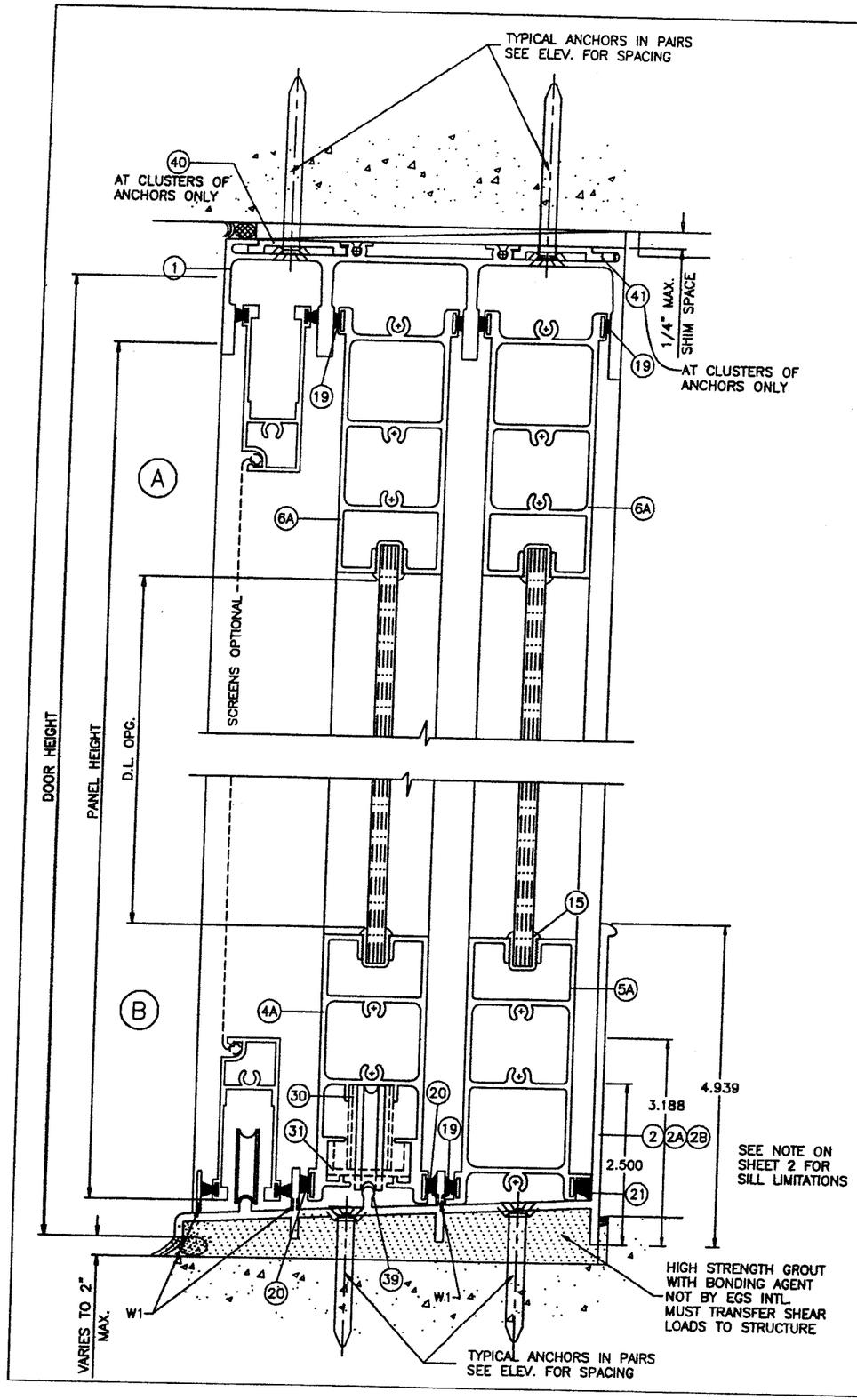

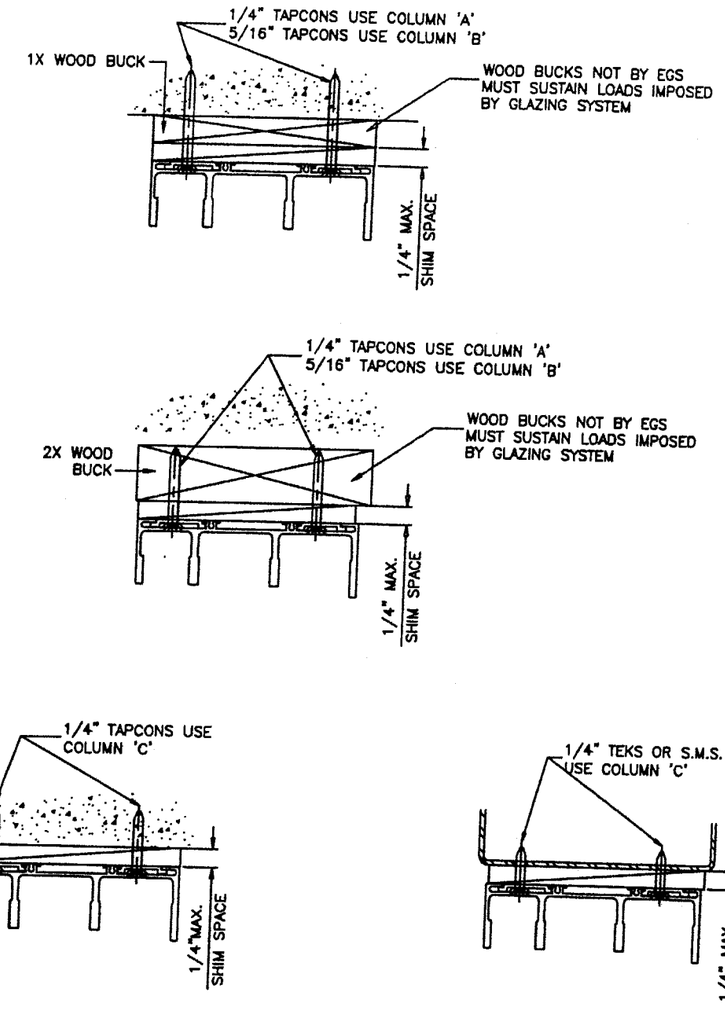

ANCHOR OPTIONS

WEEPHOLES:

W1 = 3/16"H X 3/4"W WEEP SLOTS
AT QUARTER POINTS OF EACH PANEL

W2 = 3/8" WEEP HOLE AT 6" FROM ENDS
AND CENTER OF EACH RAIL

PRODUCT REVISED
as complying with the Florida
Building Code
Acceptance No. 04-1129.02
Expiration Date: 07/30/06
By [signature]
Miami Dade Product Control
Division

Engr: DR. HUMAYOUN FAROOQ
STRUCTURES
FLA. PE # 16557
C.A.N. 3538

FEB 28 2005

AL-FAROOQ CORPORATION
ENGINEERS, PLANNERS & PRODUCT DESIGN
1235 SW 87 AVE
MIAMI, FLORIDA 33174
TEL. (305) 264-8100 FAX. (305) 262-6978
EGS\NI\W04-95EGS

ATLANTIC SERIES NI 130 ALUM. SLIDING GLASS DOOR

EGS INTERNATIONAL, LLC
3133 S.W. 25TH STREET
PEMBROKE PARK, FL. 33009
TEL. (954) 964-1441 FAX. (954) 964-1533

revisions:			
no	date	by	description

date:
scale: 1/2" = 1"
dr. by:
chk. by:

drawing no.
W04-95

sheet 3 of 8

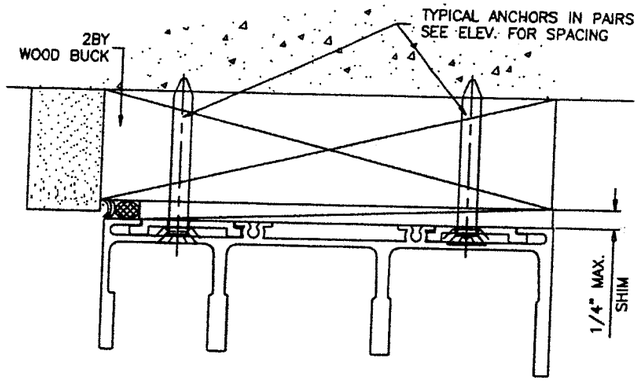

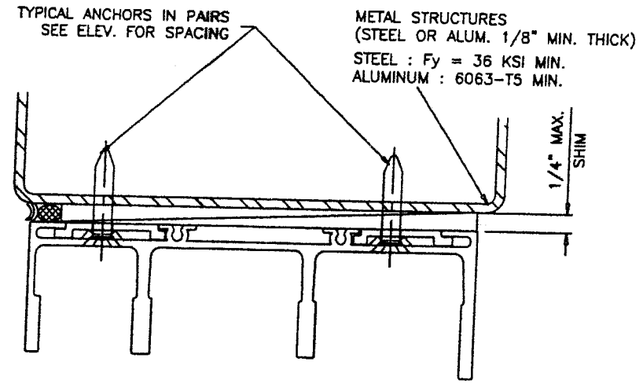

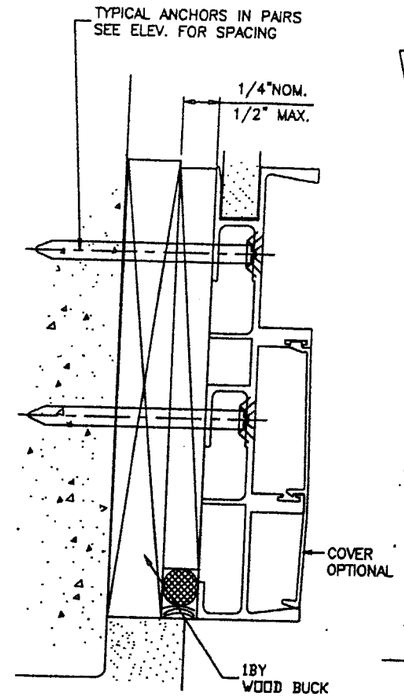

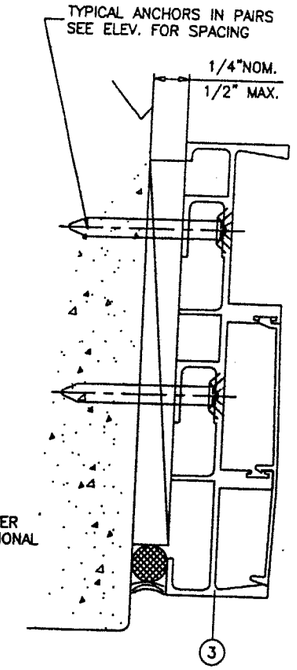

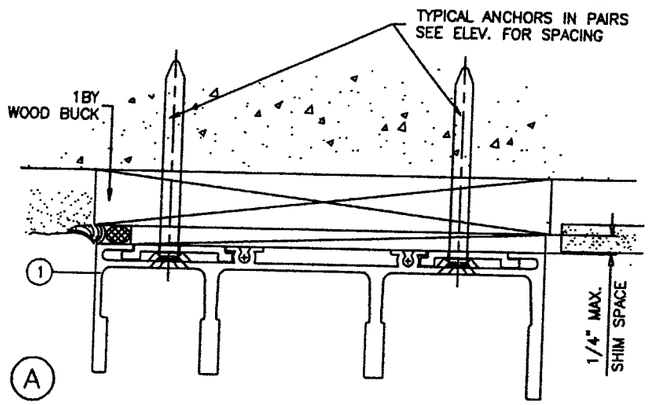

TYPICAL ANCHORS: SEE ELEV. FOR SPACING

1/4" OR 5/16" TAPCONS (BY ELCO TEXTRON)

INTO 2BY WOOD BUCKS OR WOOD STRUCTURE
1-1/2" MIN. PENETRATION INTO WOOD

THRU 1BY BUCKS INTO CONC. OR MASONRY
1-1/4" MIN. EMBED INTO CONC. OR MASONRY

DIRECTLY INTO CONC. OR MASONRY
1-1/4" MIN. EMBED INTO MASONRY (1/4" TAPCONS)
1-3/4" MIN. EMBED INTO MASONRY (5/16" TAPCONS)

#14 SMS OR SELF DRILLING SCREWS

INTO METAL STRUCTURES (1/8" MIN. THICKNESS)
OR INTO DADE COUNTY APPROVED MULLIONS
(1/4" MAX. SHIM SPACE)

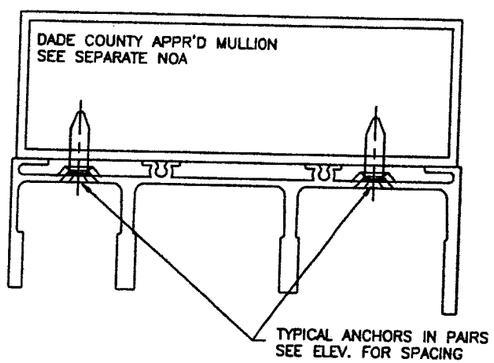

SEALANTS:

ALL JOINTS AND FRAME CONNECTIONS SEALED WITH WHITE/ALUMINUM COLORED SILICONE.
MAJOR INTERLOCK STILES TOP AND BOTTOM ENDS FILLED WITH EXPANDING URETHANE FOAM.

ALL INSTALLATION ANCHOR HEADS TO BE SEALED & EXPOSED ANCHORS TO BE CAPPED WITH ALUM. BUTTON COVERS.

WOOD BUCKS NOT BY EGS INTL., MUST SUSTAIN LOADS IMPOSED BY GLAZING SYSTEM AND TRANSFER THEM TO THE BUILDING STRUCTURE.

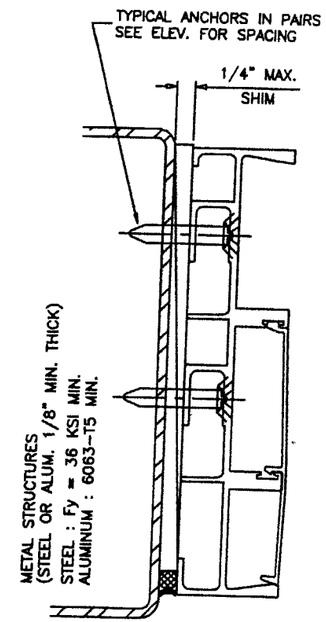

PRODUCT REVISED
as complying with the Florida Building Code
Acceptance No. 04-1129.02
Expiration Date 07/30/06
By
Miami Dade Product Control Division

Engr: DR. HUMAYOUN FAROOQ
STRUCTURES
FLA. PE # 16557
C.A.N. 3538

FEB 28 2005

AL-FAROOQ CORPORATION
ENGINEERS, PLANNERS & PRODUCT DESIGN
1235 SW 87 AVE
MIAMI, FLORIDA 33174
TEL. (305) 264-8100 FAX. (305) 262-6978
EGS\NI\W04-95EGS

ATLANTIC SERIES NI 130 ALUM. SLIDING GLASS DOOR

EGS INTERNATIONAL, LLC
3133 S.W. 25TH STREET
PEMBROKE PARK, FL. 33009
TEL. (954) 964-1441 FAX. (954) 964-1533

revisions:			
no	date	by	description

date: 9-10-04
scale: 1/2" = 1"
dr. by: KAY
chk. by:

drawing no. W04-95

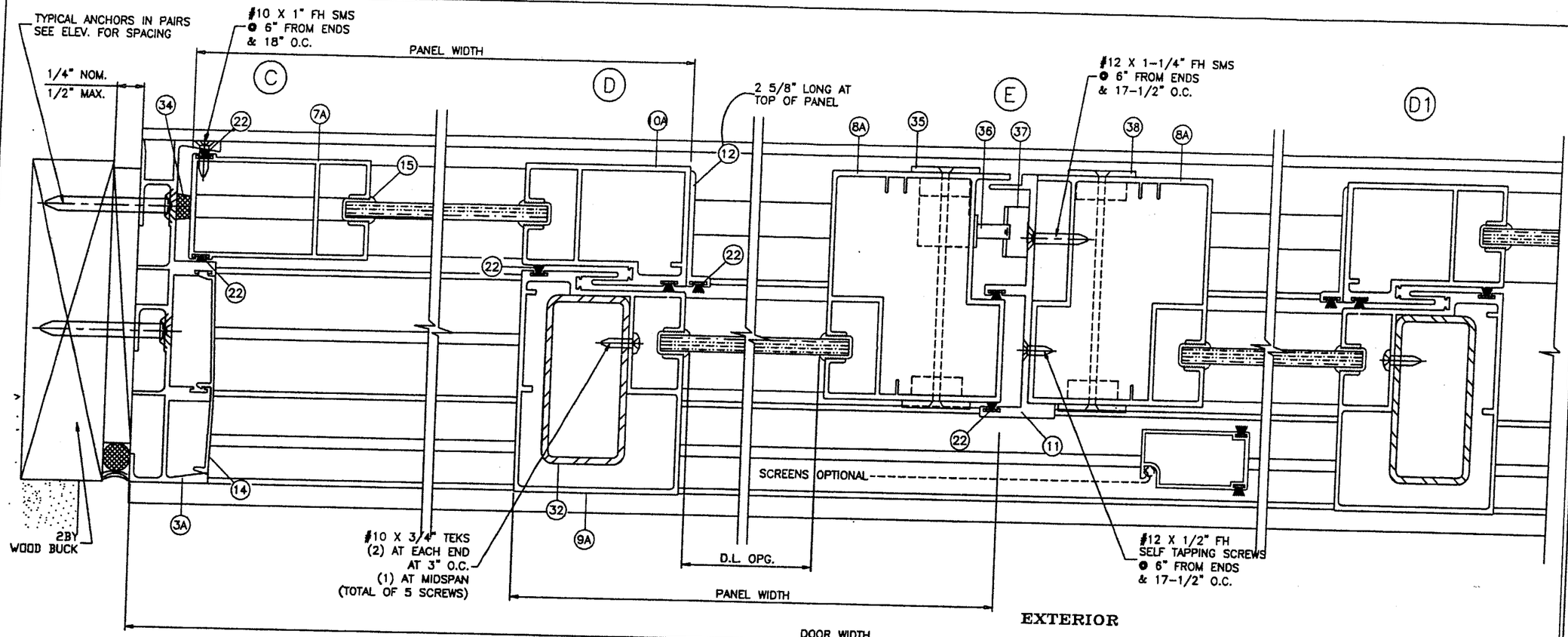

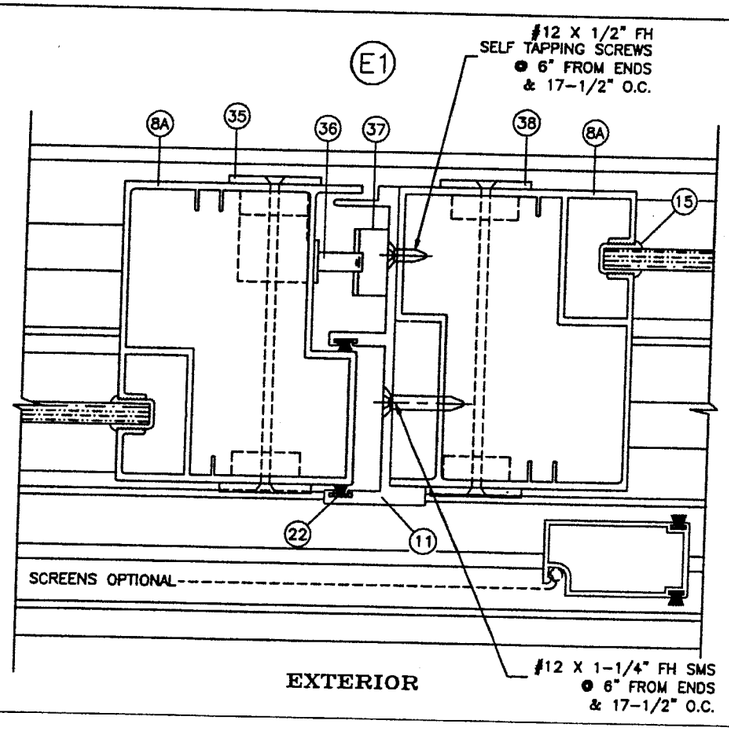

PRODUCT REVISED
as complying with the Florida
Building Code
Acceptance No. 04-1129.02
Expiration Date 07/30/06
By
Miami Dade Product Control
Division

Engr: DR. HUMAYOUN FAROOQ
STRUCTURES
FLA. PE # 16557
C.A.N. 3538

FEB 28 2005

AL-FAROOQ CORPORATION
ENGINEERS, PLANNERS & PRODUCT DESIGN
1235 SW 87 AVE
MIAMI, FLORIDA 33174
TEL. (305) 264-8100 FAX. (305) 262-6978

EGS\NI\W04-95EGS

ATLANTIC SERIES NI 130 ALUM. SLIDING GLASS DOOR

EGS INTERNATIONAL, LLC
3133 S.W. 25TH STREET
PEMBROKE PARK, FL. 33009
TEL. (954) 964-1441 FAX. (954) 964-1533

revisions:			
no	date	by	description

date: 9-10-04
scale: 1/2" = 1"
dr. by: KAY
chk. by:

drawing no.
W04-95

sheet 5 of 8

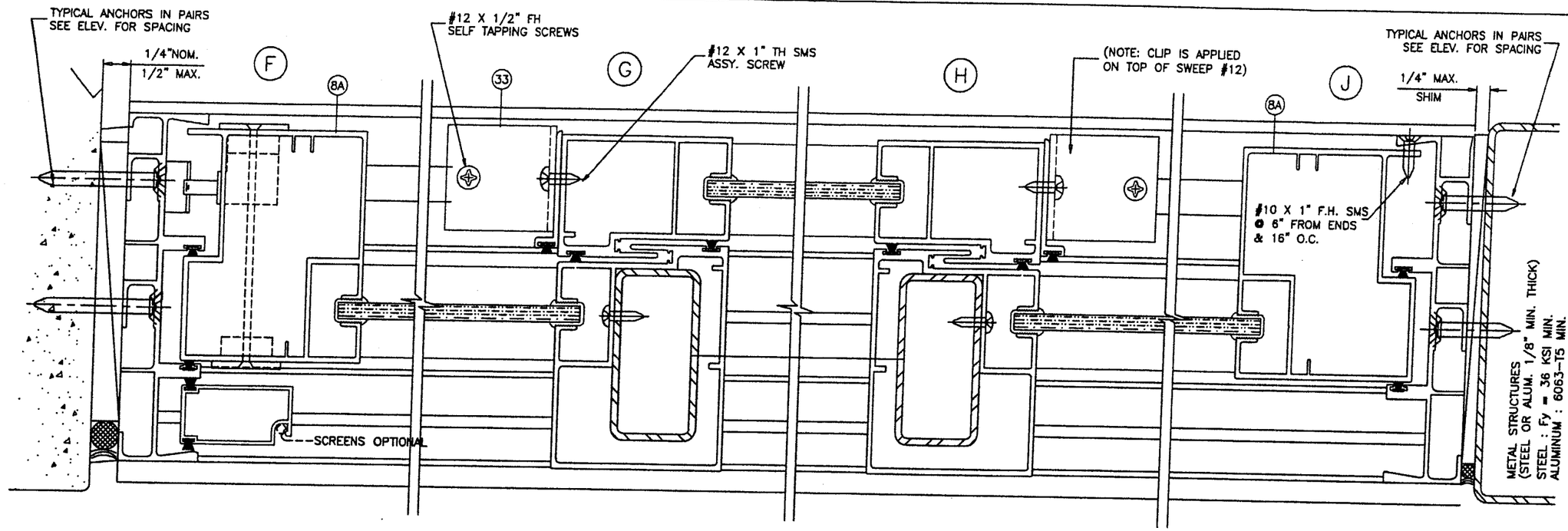

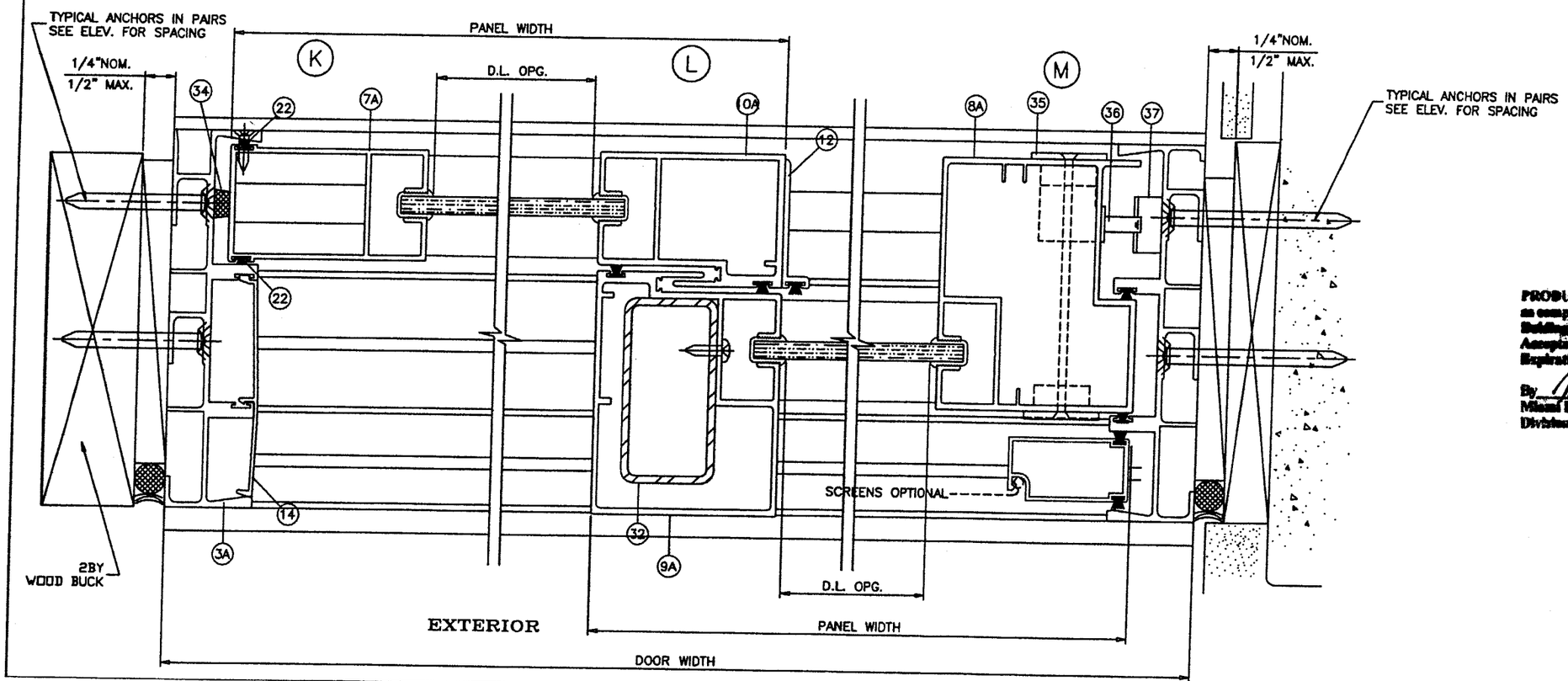

PRODUCT REVISED
as complying with the Florida Building Code
Acceptance No 04-1129.02
Expiration Date 03/30/06
By [signature]
Miami Dade Product Control Division

Engr: DR. HUMAYOUN FAROOQ
STRUCTURES
FLA. PE # 16557
C.A.N. 3538

FEB 28 2005

AL-FAROOQ CORPORATION
ENGINEERS, PLANNERS & PRODUCT DESIGN
1235 SW 87 AVE
MIAMI, FLORIDA 33174
TEL. (305) 264-8100 FAX. (305) 262-6978
EGS\NI\W04-95EGS

ATLANTIC SERIES NI 130 ALUM. SLIDING GLASS DOOR

EGS INTERNATIONAL, LLC
3133 S.W. 25TH STREET
PEMBROKE PARK, FL. 33009
TEL. (954) 964-1441 FAX. (954) 964-1533

revisions:			
no	date	by	description

date: 9-10-04
scale: 1/2" = 1"
dr. by: KAY
chk. by:

drawing no.
W04-95

sheet 6 of 8

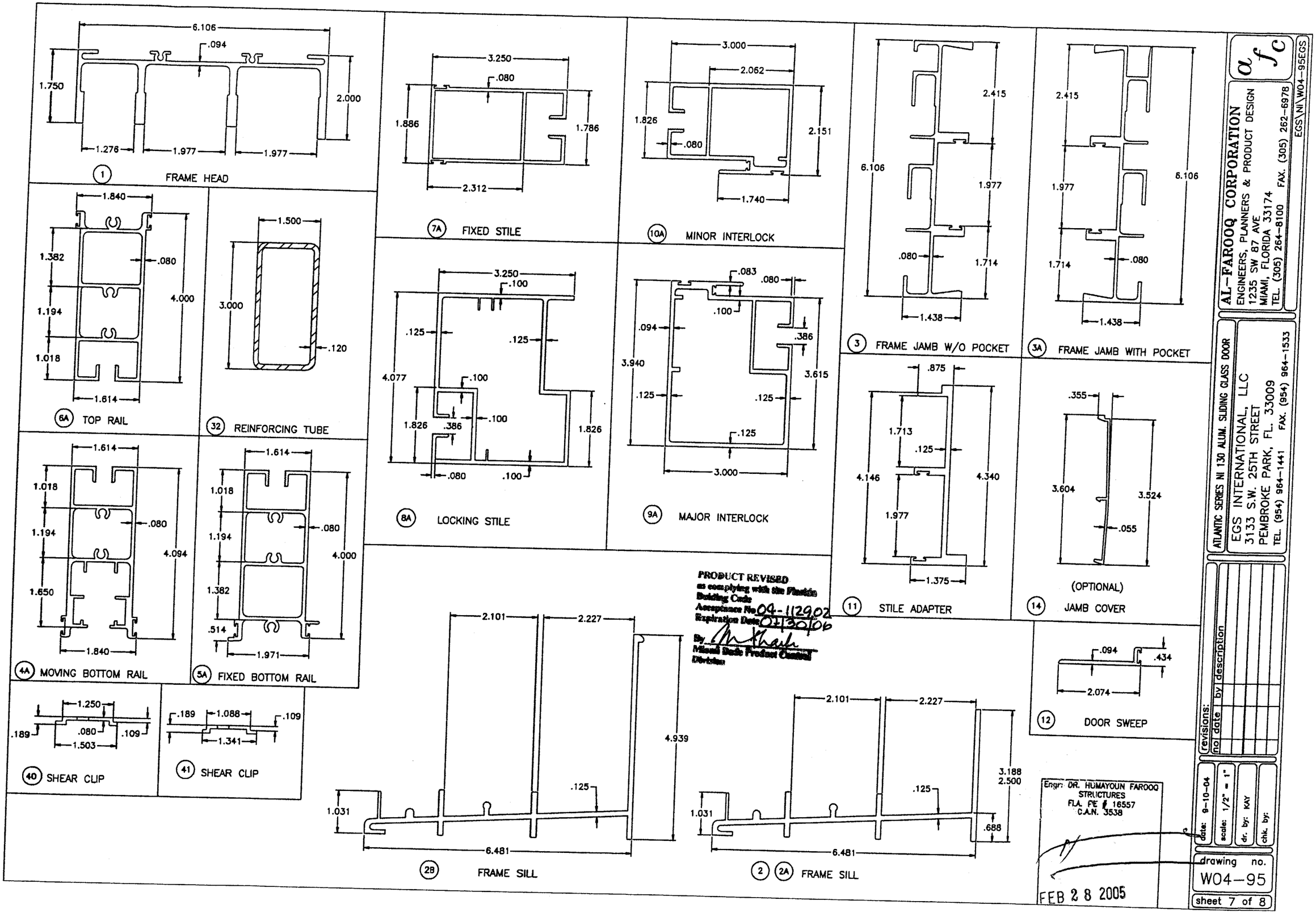
6.106
.094
1.750
2.000
1.276
1.977
1.977
1 FRAME HEAD
3.250
.080
1.886
1.786
2.312
7A FIXED STILE
3.000
2.062
1.826
.080
2.151
1.740
10A MINOR INTERLOCK
2.415
6.106
1.977
.080
1.714
1.438
3 FRAME JAMB W/O POCKET
2.415
1.977
6.106
1.714
.080
1.438
3A FRAME JAMB WITH POCKET
1.840
1.382
.080
4.000
1.194
1.018
1.614
6A TOP RAIL
1.500
3.000
.120
32 REINFORCING TUBE
3.250
.100
.125
.125
4.077
.100
1.826
.386
.100
1.826
.080
.100
8A LOCKING STILE
.083
.080
.100
.094
.386
3.940
3.615
.125
.125
.125
3.000
9A MAJOR INTERLOCK
.875
1.713
.125
4.146
4.340
1.977
1.375
11 STILE ADAPTER
.355
3.604
3.524
.055
(OPTIONAL)
14 JAMB COVER
1.614
1.018
.080
1.194
4.094
1.650
1.840
4A MOVING BOTTOM RAIL
1.614
1.018
.080
1.194
4.000
1.382
.514
1.971
5A FIXED BOTTOM RAIL
1.250
.189
.080
.109
1.503
40 SHEAR CLIP
.189
1.088
.109
1.341
41 SHEAR CLIP
2.101
2.227
4.939
.125
1.031
6.481
2B FRAME SILL
2.101
2.227
3.188
2.500
.125
1.031
.688
6.481
2 2A FRAME SILL
.094
.434
2.074
12 DOOR SWEEP
PRODUCT REVISED
as complying with the Florida
Building Code
Acceptance No. 04-1129.02
Expiration Date 01/30/06
By
Miami-Dade Product Control
Division
Engr: DR. HUMAYOUN FAROOQ
STRUCTURES
FLA. PE # 16557
C.A.N. 3538
FEB 28 2005
AL-FAROOQ CORPORATION
ENGINEERS, PLANNERS & PRODUCT DESIGN
1235 SW 87 AVE
MIAMI, FLORIDA 33174
TEL. (305) 264-8100 FAX. (305) 262-6978
EGS\NI\W04-95EGS
ATLANTIC SERIES NI 130 ALUM. SLIDING GLASS DOOR
EGS INTERNATIONAL, LLC
3133 S.W. 25TH STREET
PEMBROKE PARK, FL. 33009
TEL. (954) 964-1441 FAX. (954) 964-1533
revisions:
no date by description
date: 9-10-04
scale: 1/2" = 1"
dr. by: KAY
chk. by:
drawing no.
W04-95
sheet 7 of 8

ITEM NO.	PART NUMBER	QUANTITY	DESCRIPTION	MATERIAL	MANF./SUPPLIER/REMARKS
1	EGS-551	1	FRAME HEAD	6005-T5	–
2	EGS-580	1	FRAME SILL (2-1/2" HIGH)	6005-T5	–
2A	EGS-581	1	FRAME SILL (3-3/16" HIGH)	6005-T5	–
2B	EGS-552	1	FRAME SILL (4-15/16" HIGH)	6005-T5	–
3	EGS-567	2	FRAME JAMB W/O POCKET	6005-T5	–
3A	EGS-553	2	ALT. FRAME JAMB W/ POCKET	6005-T5	–
4A	EGS-556	1/MOV. PANEL	MOVING BOTT. RAIL (N.I.)	6005-T5	–
5A	EGS-555	1/FIX. PANEL	FIXED BOTT. RAIL (N.I.)	6005-T5	–
6A	EGS-554	1/PANEL	TOP RAIL (N.I.)	6005-T5	–
7A	EGS-557	AS REQD.	FIXED STILE (N.I.)	6005-T5	–
8A	EGS-558	AS REQD.	LOCKING STILE (N.I.)	6005-T5	–
9A	EGS-559	AS REQD.	MAJOR INTERLOCK (N.I.)	6005-T5	–
10A	EGS-560	AS REQD.	MINOR INTERLOCK (N.I.)	6005-T5	–
11	EGS-561	AS REQD.	STILE ADAPTER	6005-T5	–
12	EGS-566	AS REQD.	DOOR SWEEP	6005-T5	–
14	EGS-570	AS REQD.	JAMB COVER	6063-T5	AT TOP OF FIXED PANEL
15	EGS-567	AS REQD.	GLAZING GASKET (N.I.)	6063-T5	OPTIONAL
19	7527-6011-4	AS REQD.	FINSEAL WOOLPILE AT HORIZ. RAILS	PVC	–
20	T-2836G	AS REQD.	POLYBOND FINSEAL AT MOV. BOTTOM RAIL	–	SCHLEGEL
21	7537-6011-6	AS REQD.	FINSEAL WOOLPILE AT FIX. BOTTOM RAIL	–	ULTRAFAB (.280H X .360 BASE)
22	7420-6011-2	AS REQD.	FINSEAL WOOLPILE AT VERT. STILES	–	SCHLEGEL
27	#8 X 3/4"	2/ CORNER	FRAME ASSEMBLY SCREWS	–	SCHLEGEL
28	#12 X 1"	2/ CORNER	PANEL ASSEMBLY SCREWS	ST. STEEL	PH SMS
30	–	2/ PANEL	PANEL ROLLER ASSEMBLY	ST. STEEL	TH SMS
31	–	1/ MOV. PANEL	ALUM CHANNEL, FULL LENGTH (BETWEEN WHEELS)	ST. STEEL	1-11/16" O.D. WHEELS
32	–	AS REQD.	INTERLOCK REINFORCEMENT	6063-T5	
33	–	AS REQD.	FIX. PANEL CLIP (AT FRAME HEAD ONLY)	STEEL	1 1/2" X 3" X 11 G.A.
34	–	AS REQD.	RUBBER BUMPER	ALUMINUM	2 X 3 X 1/8" X 1-7/8" LONG
35	4430-00-08	1	FLUSH LOCKSET, MOUNTED W/ (2) #8 X 4" FH SCREWS	–	1/2" X 1/2" SQ. X 3/16" HIGH
36	MS1847-09	1	DEAD LOCK, MOUNTED W/ (2) #6 X 1/4" FH SCREWS	ABS RESIN	ADAMS-RITE
37	4801-05	1	STRIKE, MOUNTED W/ (2) #8 X 1" PH SCREWS & PLASTIC SHIM	ST. STEEL	ADAMS-RITE
38	4432	1	DUMMY FLUSH PULL, MOUNTED W/ (2) #8 X 4" FH SCREWS	ST. STEEL	ADAMS-RITE
39	TC2	1	TRACK COVER	ABS RESIN	ADAMS-RITE
40	EGS-584	AS REQD.	SHEAR CLIP AT CLUSTERS ONLY	ST/ST	HYGRADE
41	EGS-584	AS REQD.	SHEAR CLIP AT CLUSTERS ONLY	6005-T5	–
				6005-T5	–

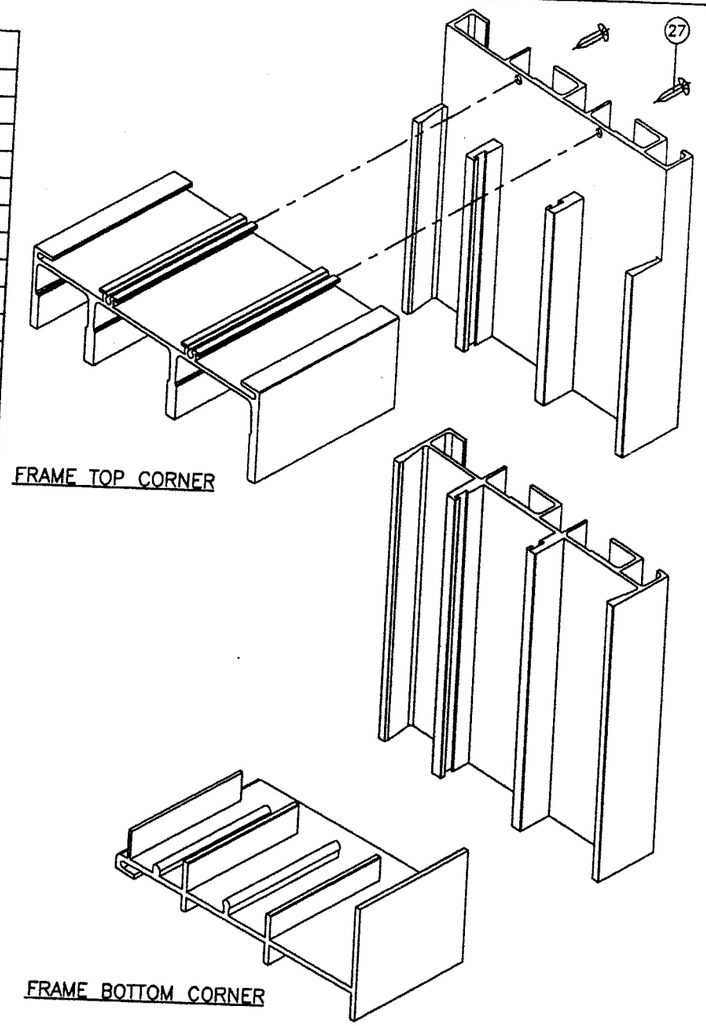

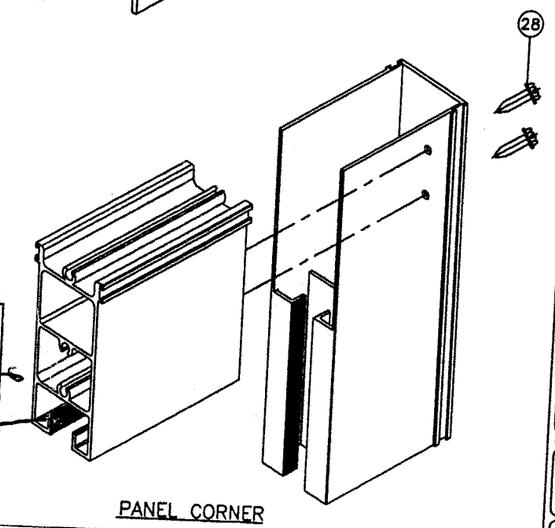

PRODUCT REVISED
as complying with the Florida
Building Code
Acceptance No. 04-1129.02
Expiration Date 02/30/06
By M Khali
Miami Dade Product Control
Division

Engr: DR. HUMAYOUN FAROOQ
STRUCTURES
FLA. PE # 16557
C.A.N. 3538

FEB 2 8 2005

AL-FAROOQ CORPORATION
ENGINEERS, PLANNERS & PRODUCT DESIGN
1235 SW 87 AVE
MIAMI, FLORIDA 33174
TEL. (305) 264-8100 FAX. (305) 262-6978

EGS\NI\W04-95EGS

ATLANTIC SERIES NI 130 ALUM. SLIDING GLASS DOOR

EGS INTERNATIONAL, LLC
3133 S.W. 25TH STREET
PEMBROKE PARK, FL. 33009
TEL. (954) 964-1441 FAX. (954) 964-1533

revisions:

no	date	by	description

date: 9-10-04
scale: 1/2" = 1"
dr. by: KAY
chk. by:

drawing no.
W04-95

sheet 8 of 8