MIAMI-DADE

BUILDING CODE COMPLIANCE OFFICE (BCCO)
PRODUCT CONTROL DIVISION

MIAMI-DADE COUNTY, FLORIDA
METRO-DADE FLAGLER BUILDING
140 WEST FLAGLER STREET, SUITE 1603
MIAMI, FLORIDA 33130-1563
(305) 375-2901 FAX (305) 375-2908

NOTICE OF ACCEPTANCE (NOA)

C.P. Loewen Enterprises
77 P.T.H., 52 West, Box 2260
Steinbach, Manitoba, Canada R5G 1B2

SCOPE:

This NOA is being issued under the applicable rules and regulations governing the use of construction materials. The documentation submitted has been reviewed by Miami-Dade County Product Control Division and accepted by the Board of Rules and Appeals (BORA) to be used in Miami Dade County and other areas where allowed by the Authority Having Jurisdiction (AHJ).

This NOA shall not be valid after the expiration date stated below. The Miami-Dade County Product Control Division (In Miami Dade County) and/or the AHJ (in areas other than Miami Dade County) reserve the right to have this product or material tested for quality assurance purposes. If this product or material fails to perform in the accepted manner, the manufacturer will incur the expense of such testing and the AHJ may immediately revoke, modify, or suspend the use of such product or material within their jurisdiction. BORA reserves the right to revoke this acceptance, if it is determined by Miami-Dade County Product Control Division that this product or material fails to meet the requirements of the applicable building code.

This product is approved as described herein, and has been designed to comply with the Florida Building Code, including the High Velocity Hurricane Zone.

DESCRIPTION: Aluminum Clad Wood Single Hung Window - Impact

APPROVAL DOCUMENT: Drawing No.**1300**, titled "Aluminum Clad Wood Impact Single Hung Window", sheets 1 through 6 of 6, dated 06/21/04, with revision #A1 dated 12/06/04 on sheet 1 of 6 only, prepared by W.W. Schaefer Engineering& Consultant, P.A., signed and sealed by Warren W. Schaffer, P.E., bearing the Miami-Dade County Product Control Revision stamp with the Notice of Acceptance number and expiration date by the Miami-Dade County Product Control Division.

MISSILE IMPACT RATING: Large and Small Missile Impact Resistant

LABELING: Each unit shall bear a permanent label with the manufacturer's name or logo, city, state and following statement: "Miami-Dade County Product Control Approved", unless otherwise noted herein.

RENEWAL of this NOA shall be considered after a renewal application has been filed and there has been no change in the applicable building code negatively affecting the performance of this product.

TERMINATION of this NOA will occur after the expiration date or if there has been a revision or change in the materials, use, and/or manufacture of the product or process. Misuse of this NOA as an endorsement of any product, for sales, advertising or any other purposes shall automatically terminate this NOA. Failure to comply with any section of this NOA shall be cause for termination and removal of NOA.

ADVERTISEMENT: The NOA number preceded by the words Miami-Dade County, Florida, and followed by the expiration date may be displayed in advertising literature. If any portion of the NOA is displayed, then it shall be done in its entirety.

INSPECTION: A copy of this entire NOA shall be provided to the user by the manufacturer or its distributors and shall be available for inspection at the job site at the request of the Building Official.

This NOA **revises NOA # 04-1001.03** and consists of this page 1 and evidence pages E-1 and E-2, as well as approval document mentioned above.

The submitted documentation was reviewed by **Manuel Perez, P.E.**

PRODUCT CONTROL ACCEPTED

NOA No 04-1209.02
Expiration Date: September 16, 2009
Approval Date: May 05, 2005

NOTICE OF ACCEPTANCE: EVIDENCE SUBMITTED

A. DRAWINGS

1. Manufacturer's die drawings and sections.
2. Drawing No.**1300**, titled "Aluminum Clad Wood Impact Single Hung Window", sheets 1 through 6 of 6, dated 06/21/04, with revision #A1 dated 12/06/04 on sheet 1 of 6 only, prepared by W.W. Schaefer Engineering& Consultant, P.A., signed and sealed by Warren W. Schaffer, P.E.

B. TESTS

1. Test reports on 1) Air Infiltration Test, per FBC, TAS 202-94
   2) Uniform Static Air Pressure Test, Loading per FBC, TAS 202-94
   3) Water Resistance Test, per FBC, TAS 202-94
   4) Large Missile Impact Test per FBC, TAS 201-94
   5) Cyclic Wind Pressure Loading per FBC, TAS 203-94
   6) Forced Entry Test, per FBC 2411 3.2.1 and TAS 202-94

   along with marked-up drawings and installation diagram of aluminum clad wood single hung window, prepared by ETC Laboratories, Inc., Test Report No. **ETC-04-959-14827.0**, dated 03/15-6/09/03 signed and sealed by Mark D. Passero, P.E.
   "Submitted under NOA# 04-0804.01"

C. CALCULATIONS

1. Supporting structural analysis, dated 12/06/04, prepared by W.W. Schaefer Engineering& Consultant, P.A., signed and sealed by Warren W. Schaffer, P.E.
2. Anchor Calculations, ASTM-E1300, and structural analysis, dated 09/22/04, prepared by W.W. Schaefer Engineering& Consultant, P.A., signed and sealed by Warren W. Schaffer, P.E.
   "Submitted under NOA# 04-1001.03"
3. Anchor Calculations, ASTM-E1300, and structural analysis, dated 06/23/04, prepared by W.W. Schaefer Engineering& Consultant, P.A., signed and sealed by Warren W. Schaffer, P.E.
   "Submitted under NOA# 04-0804.01"

D. QUALITY ASSURANCE

1. Miami Dade Building Code Compliance Office (BCCO).

E. MATERIAL CERTIFICATIONS

1. Notice of Acceptance No. **01-1204.01** issued to E.I. DuPont DeNemours for their "Sentry ® Plus" dated 1/17/02, expiring on 1/14/07.

Manuel Perez

Manuel Perez, P.E.
Product Control Examiner
NOA No 04-1209.02
Expiration Date: September 16, 2009
Approval Date: May 05, 2005

NOTICE OF ACCEPTANCE: EVIDENCE SUBMITTED

F. STATEMENTS

1. Statement letter of conformance, dated June 28, 2004, signed and sealed by Warren W. Schaefer, P.E.
   "Submitted under NOA# 04-0804.01"
2. Statement letter of no financial interest June 28, 2004, signed and sealed by Warren W. Schaefer, P.E.
   "Submitted under NOA# 04-0804.01"
3. Letter from C.P. Loewen, Enterprises, dated July 19, 2004, designating Warren Schaefer of W.W. Schaefer Engineering & Consulting, as the contact person for this file.
   "Submitted under NOA# 04-0804.01"

G. OTHER

1. Notice of Acceptance No. **04-1001.03** issued to C.P. Loewen Enterprises, for their Aluminum Clad Wood Single Hung Window - Impact, approved on 11/25/2004 and expiring on 09/16/2009.

Manuel Perez, P.E.
Product Control Examiner
NOA No 04-1209.02
Expiration Date: September 16, 2009
Approval Date: May 05, 2005

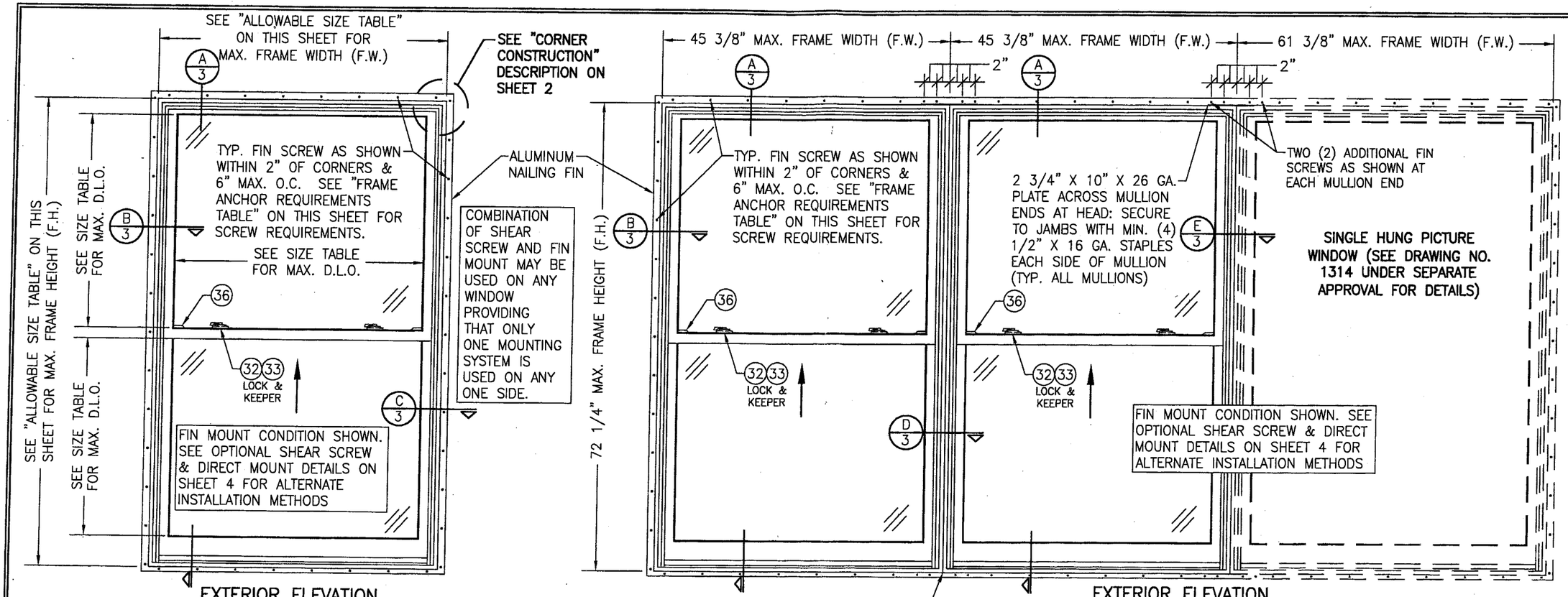

EXTERIOR ELEVATION
SINGLE HUNG WINDOW
SCALE: 3/4"=1'-0"

EXTERIOR ELEVATION
MULTIPLE OPERABLE/FIXED WINDOW UNIT
SCALE: 3/4"=1'-0"

NOTE: SEE SINGLE WINDOW ELEVATION FOR DETAIL NOT SHOWN
UP TO 4 WINDOWS CONSISTING OF ANY COMBINATION OF FIXED OR OPERABLE MAY BE PLACED IN ONE OPENING PROVIDING THE OPENING IS DESIGNED TO SUPPORT THE WINDOWS.

ALLOWABLE SIZE TABLE (SINGLE WINDOWS)

MAXIMUM FRAME HEIGHT (IN.)	MAXIMUM FRAME WIDTH (IN.)	MAXIMUM VERTICAL D.L.O.'S (IN.)	MAXIMUM HORIZONTAL D.L.O.'S (IN.)
72 1/4"	45 3/8	31 5/8	39
76 1/4"	42 3/8	33 5/8	36
80 1/4"	40 3/8	35 5/8	34
88 1/4"	37 3/8	39 5/8	31

ALLOWABLE DESIGN PRESSURE

+/-70 PSF

ALL SINGLE AND MULLED UNITS

FRAME ANCHOR REQUIREMENTS TABLE

OPENING TYPE (SUBSTRATE)	JAMB TO OPENING FASTENER TYPE	MINIMUM EMBED	MINIMUM EDGE DIST.
FIN SCREWS			
2X_ WOOD FRAME OR BUCK	NO. 8 X 1 1/2" SMS SCREWS	1 3/8"	1/2"
SHEAR SCREWS			
2X_ WOOD FRAME OR BUCK	NO. 10 SMS SCREW	1 1/4"	3/4"
CMU/CONCRETE	(1) 3/16" CONCRETE SCREW	1 1/4"	2"

(1) CONCRETE SCREWS SHALL BE ELCO OR ITW RAMSET/RED HEAD TAPCONS, HILTI KWIK-CON II OR POWERS RAWL TAPPER (HARDENED STEEL OR S.S.).

*** ANCHOR NOTE: FRAME MAY BE EITHER DIRECT MOUNTED TO THE OPENING, MOUNTED ONTO A CONTINUOUS WOOD SPACER, OR ANCHORED TO A MIN. 2x4 NO. 2 SOUTHERN PINE WOOD BUCK. WHEN ANCHORED TO A 2x4 BUCK, NO. 10 SHEAR SCREWS OR NO. 8 FIN SCREWS SHALL BE USED. WHEN DIRECT MOUNTED OR MOUNTED WITH SPACER, 3/16" CONCRETE SCREWS SHALL BE USED. SEE "ANCHOR REQUIREMENTS TABLE" FOR EMBED REQUIREMENTS.**

LOCK REQUIREMENTS

WINDOW WIDTH	NUMBER OF LOCKS
LESS THAN 33"	1
33" & OVER	2

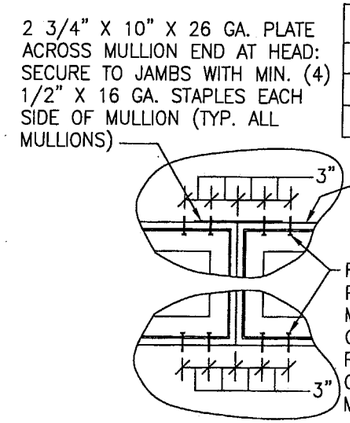

TYP. VERTICAL MULLION END DETAIL WHEN SHEAR SCREW OR DIRECT MOUNT CONDITION EXISTS

PRODUCT REVISED
as complying with the Florida Building Code
Acceptance No. 04-1209.02
Expiration Date SEPT. 16, 2009
By Miami Dade Product Control Division

GENERAL NOTES

1. THESE WINDOW SYSTEMS HAVE BEEN TESTED, ANALYZED AND APPROVED FOR DESIGN PRESSURES NOT TO EXCEED THOSE SHOWN IN THE "ALLOWABLE DESIGN PRESSURE" TABLE.
2. BUCKING, OPENINGS & BUCKING FASTENERS MUST BE PROPERLY DESIGNED & INSTALLED TO TRANSFER WIND LOADS TO THE STRUCTURE.
3. ALL HARDWARE & FASTENERS SHALL BE IN ACCORDANCE WITH THESE DRAWINGS & MAY NOT VARY UNLESS SPECIFICALLY MENTIONED ON THE DRAWINGS.
4. THE DETAILS & SPECIFICATIONS SHOWN HEREIN REPRESENT THE PRODUCTS TESTED & PROPOSED FOR WATER, AIR, IMPACT, CYCLIC & UNIFORM STATIC AIR PRESSURE TESTING IN CONFORMANCE WITH ASTM E1996 & FLORIDA BUILDING CODE PROTOCOLS TAS-201, 202 & 203 FOR LARGE MISSILE IMPACT WINDOWS.
5. THESE WINDOW SYSTEMS HAVE BEEN DESIGNED IN ACCORDANCE WITH THE FLORIDA BUILDING CODE (FBC) FOR HIGH VELOCITY HURRICANE ZONES (HVHZ).
6. IMPACT SHUTTERS ARE NOT REQUIRED WITH THESE WINDOWS.
7. ALL ANCHORS SHALL BE INSTALLED AS SPECIFIED ON THESE DRAWINGS. SPECIFIED EMBEDMENT TO BASE MATERIAL SHALL BE BEYOND WALL FINISH OR STUCCO.

DRAWN BY: K.P.S.	CHECKED BY: W.W.S.
PLOT: 1=16	DATE: 06/21/04

NO.	REVISION DESCRIPTION	BY	DATE
A1	ADDED 88.25" X 37.375" WINDOW TO WINDOW SIZE TABLE	WWS	12/06/04

DRAWING TITLE
ALUMINUM CLAD WOOD IMPACT SINGLE HUNG WINDOW

MANUFACTURER
C.P. LOEWEN ENTERPRISES
77 P.T.H 52 WEST, BOX 2260
STEINBACH, MB CANADA R5G 1B2
204-326-6446

CONSULTANTS
W. W. SCHAEFER ENGINEERING & CONSULTING, P.A.
8895 N. MILITARY TRAIL; SUITE C-204
PALM BEACH GARDENS, FL 33410
PHONE: 561-775-4902 FAX: 561-775-4903

CERTIFICATION
DEC 08 2004
WARREN W. SCHAEFER, P.E.
P.E. NO. 44135

DRAWING NO. 1300
REV.
SHEET NO. 1 OF 6

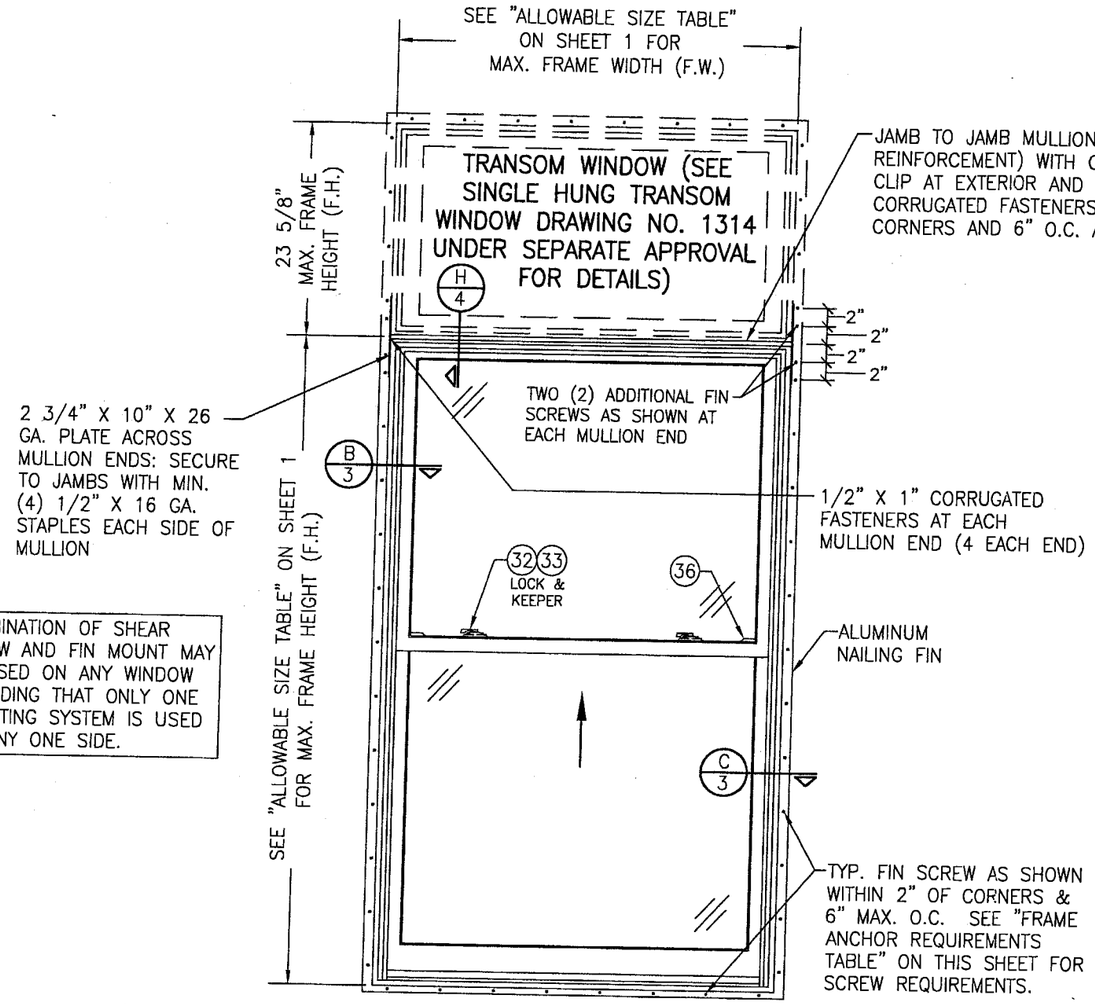

COMBINATION OF SHEAR SCREW AND FIN MOUNT MAY BE USED ON ANY WINDOW PROVIDING THAT ONLY ONE MOUNTING SYSTEM IS USED ON ANY ONE SIDE.

EXTERIOR ELEVATION
SINGLE HUNG WINDOW WITH TRANSOM

SCALE: 3/4"=1'-0"

SEE SINGLE WINDOW ELEVATION FOR DETAIL NOT SHOWN

FIN MOUNT CONDITION SHOWN. SEE OPTIONAL SHEAR SCREW & DIRECT MOUNT DETAILS ON SHEET 4 FOR ALTERNATE INSTALLATION METHODS

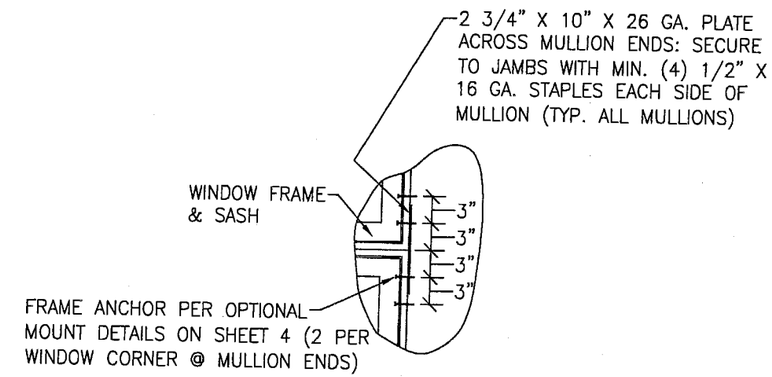

TYP. HORIZONTAL MULLION END DETAIL WHEN SHEAR SCREW OR DIRECT MOUNT CONDITION EXISTS

CORNER CONSTRUCTION

WOOD JAMBS: COPED & BUTTED TOGETHER WITH DYMONIC FC AND (3) 16 GA. X 2" STAPLES THROUGH THE TOP & (2) 16 GA. X 2" STAPLES THROUGH THE SIDE.

JAMB CLAD: MITERED, JOINED WITH A CORNER KEY & (1) NO. 6 X 1 1/2" SCREW AND HAVE A SMALL BEAD OF DYMONIC FC WITH A FOAM GASKET IN BETWEEN.

WOOD SASH: MORTISE & TENON AND JOINED WITH (1) NO. 6 X 1 1/2" SCREW PER CORNER FOR THE TOP SASH STILE & MEET RAIL AND (2) 16 GA. X 1 1/4" LONG NAILS PER CORNER FOR ALL OTHER CORNERS.

SASH CLAD: COPED, SEALED WITH SM8400 AND BUTTED TOGETHER.

FIXED MEETING RAIL: BUTTED TO JAMB & JOINED WITH (4) NO. 8 X 1 1/2" F.H. SCREWS THROUGH JAMB INTO ALUMINUM RAIL BOSS PER END.

PRODUCT REVISED
as complying with the Florida
Building Code
Acceptance No. 04-1209.02
Expiration Date SEPT. 16, 2009
By Manuel Perez
Miami Dade Product Control
Division

DRAWN BY: K.P.S.	CHECKED BY: W.W.S.
PLOT: 1=16	DATE: 06/21/04

NO.	REVISION DESCRIPTION	BY	DATE

DRAWING TITLE
ALUMINUM CLAD WOOD IMPACT SINGLE HUNG WINDOW

MANUFACTURER
C.P. LOEWEN ENTERPRISES
77 P.T.H 52 WEST, BOX 2260
STEINBACH, MB CANADA R5G 1B2
204-326-6446

CONSULTANTS
W. W. SCHAEFER ENGINEERING & CONSULTING, P.A.
8895 N. MILITARY TRAIL; SUITE C-204
PALM BEACH GARDENS, FL 33410
PHONE: 561-775-4902 FAX: 561-775-4903

CERTIFICATION
DEC 08 2004
WARREN W. SCHAEFER, P.E.
P.E. NO. 44135

DRAWING NO. 1300
REV.
SHEET NO. 2 OF 6

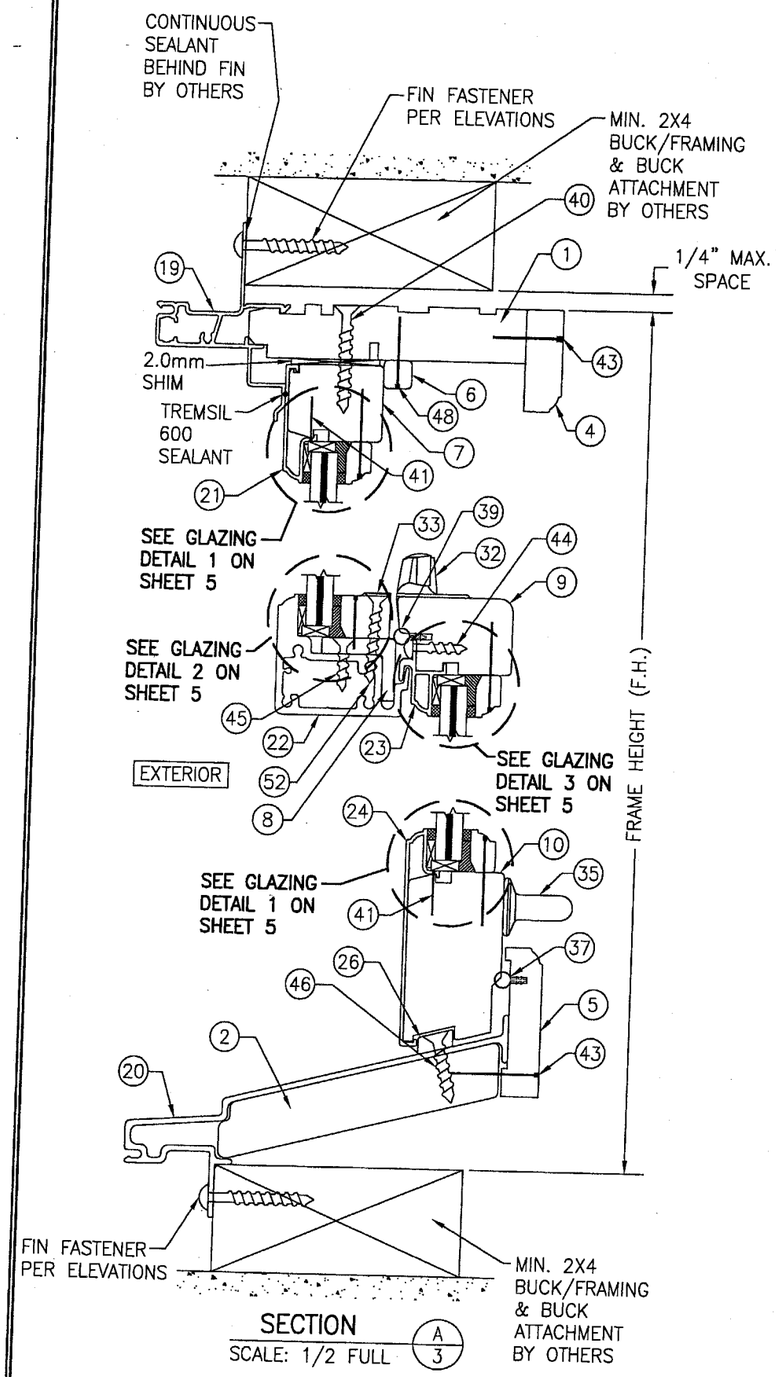

SECTION A/3
SCALE: 1/2 FULL

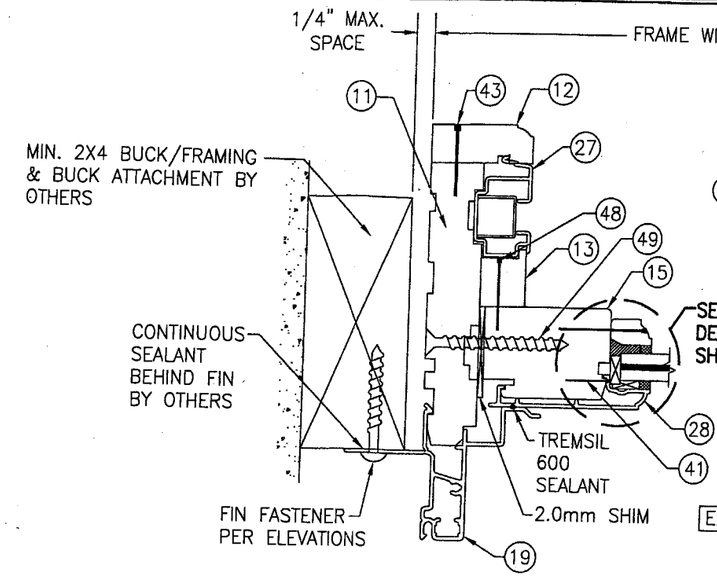

SECTION B/3
SCALE: 1/2 FULL

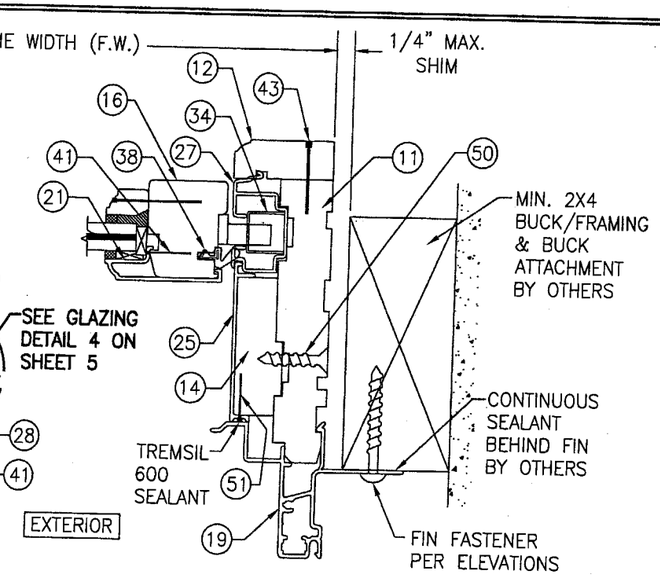

SECTION C/3
SCALE: 1/2 FULL

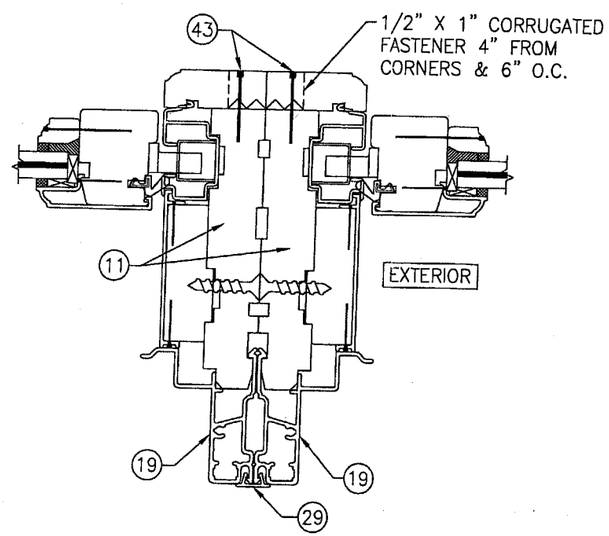

SECTION D/3
SCALE: 1/2 FULL
FOR DETAIL NOT SHOWN, SEE OTHER SECTIONS

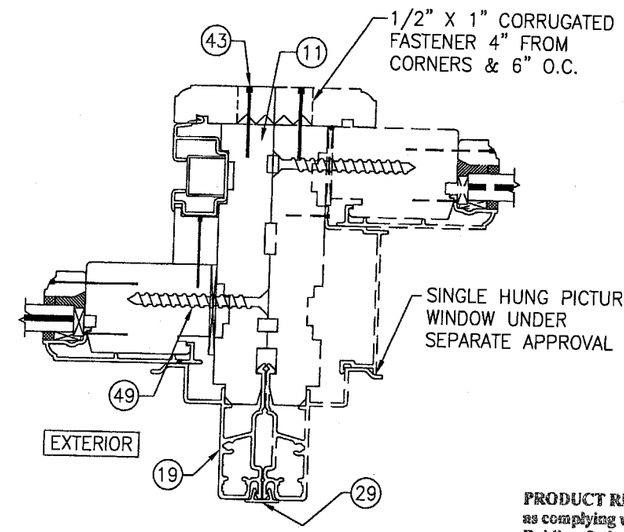

SECTION E/3
SCALE: 1/2 FULL
FOR DETAIL NOT SHOWN, SEE OTHER SECTIONS

PRODUCT REVISED
as complying with the **Florida** Building Code
Acceptance No 04-1209.02
Expiration Date SEPT. 16, 2009
By Manuel Serra
Miami-Dade Product Control Division

NO.	REVISION DESCRIPTION	BY	DATE

DRAWN BY: K.P.S. | CHECKED BY: W.W.S.
PLOT: 1=2 | DATE: 06/21/04

DRAWING TITLE: ALUMINUM CLAD WOOD IMPACT SINGLE HUNG WINDOW

MANUFACTURER: C.P. LOEWEN ENTERPRISES
77 P.T.H 52 WEST, BOX 2260
STEINBACH, MB CANADA R5G 1B2
204-326-6446

CONSULTANTS: W. W. SCHAEFER ENGINEERING & CONSULTING, P.A.
8895 N. MILITARY TRAIL, SUITE C-204
PALM BEACH GARDENS, FL 33410
PHONE: 561-775-4902 FAX: 561-775-4903

CERTIFICATION: DEC 06 2004
WARREN W. SCHAEFER, P.E.
P.E. NO. 44135

DRAWING NO. 1300 | REV.
SHEET NO. 3 OF 6

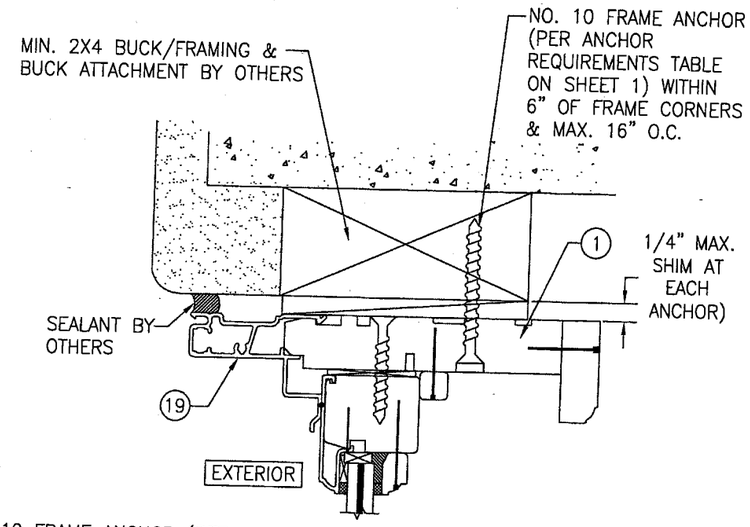

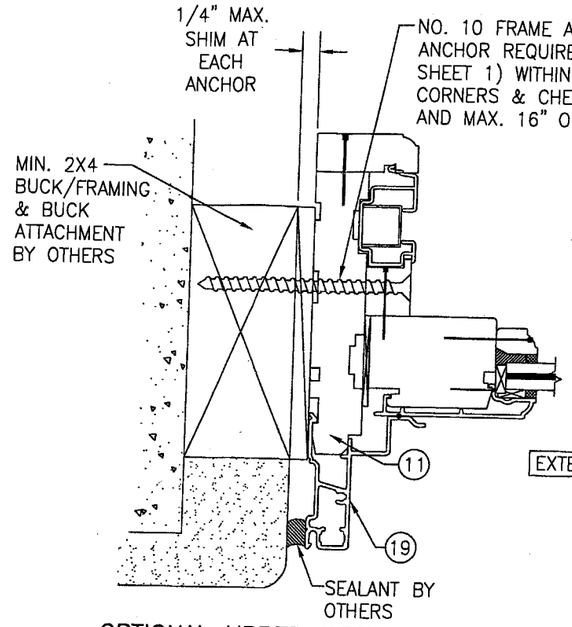

OPTIONAL UPPER SIDE SHEAR SCREW MOUNT DETAIL

FOR DETAIL NOT SHOWN, SEE OTHER SECTIONS

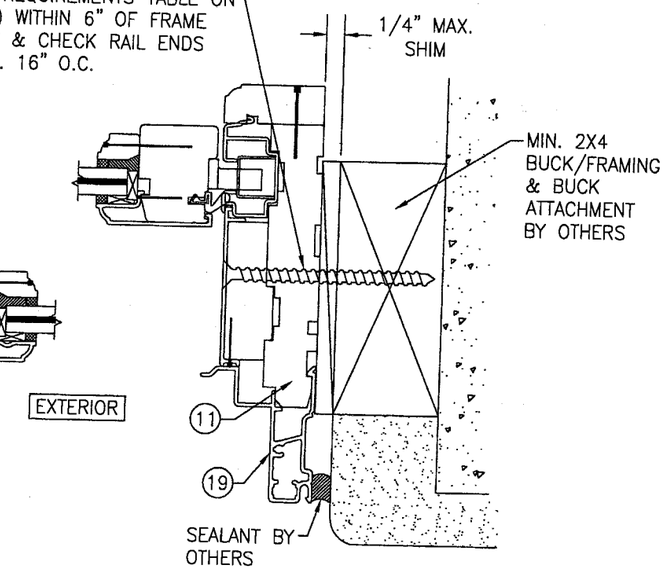

OPTIONAL LOWER SIDE SHEAR SCREW MOUNT DETAIL

FOR DETAIL NOT SHOWN, SEE OTHER SECTIONS

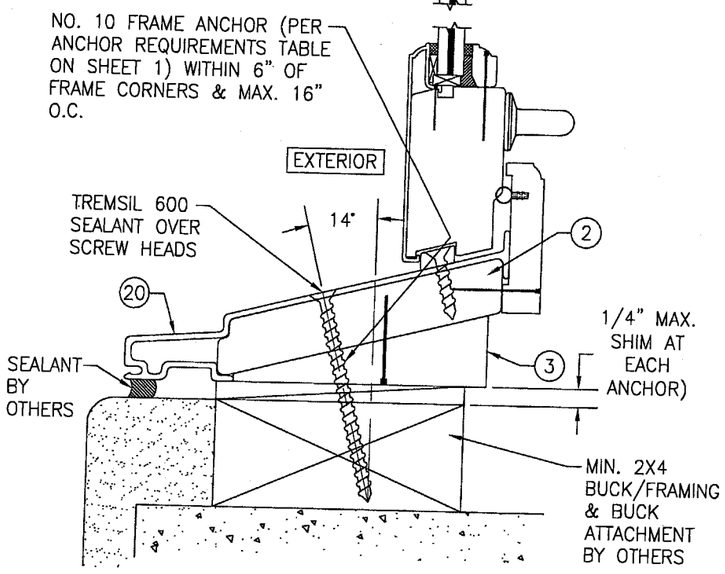

OPTIONAL SILL SHEAR SCREW MOUNT DETAIL

FOR DETAIL NOT SHOWN, SEE OTHER SECTIONS

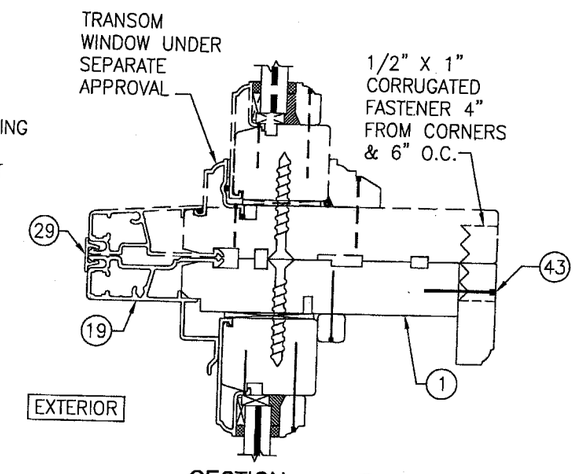

SECTION H/4

SCALE: 1/2 FULL

FOR DETAIL NOT SHOWN, SEE OTHER SECTIONS

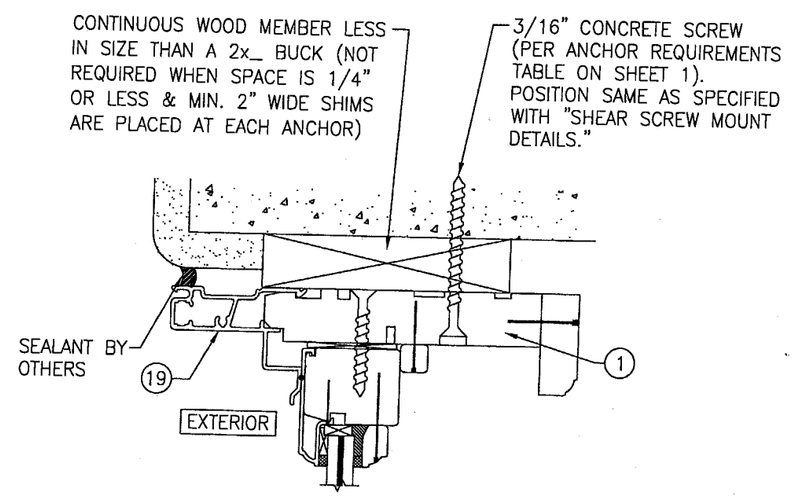

OPTIONAL DIRECT MOUNT DETAIL

FOR DETAIL NOT SHOWN, SEE OTHER SECTIONS

(HEAD SECTION SHOWN, SIDE AND SILL SIMILAR)

PRODUCT REVISED
as complying with the Florida Building Code
Acceptance No. 04-1209.02
Expiration Date SEPT. 16, 2009
By Manuel Perez
Miami-Dade Product Control
Division

DRAWN BY: K.P.S.	CHECKED BY: W.W.S.
PLOT: 1=2	DATE: 06/21/04

NO.	REVISION DESCRIPTION	BY	DATE

DRAWING TITLE: ALUMINUM CLAD WOOD IMPACT SINGLE HUNG WINDOW

MANUFACTURER: C.P. LOEWEN ENTERPRISES, 77 P.T.H 52 WEST, BOX 2260, STEINBACH, MB CANADA R5G 1B2, 204-326-6446

CONSULTANTS: W. W. SCHAEFER ENGINEERING & CONSULTING, P.A., 8895 N. MILITARY TRAIL; SUITE C-204, PALM BEACH GARDENS, FL 33410, PHONE: 561-775-4902 FAX: 561-775-4903

CERTIFICATION: DEC 08 2004

WARREN W. SCHAEFER, P.E. P.E. NO. 44135

DRAWING NO. 1300 REV.

SHEET NO. 4 OF 6

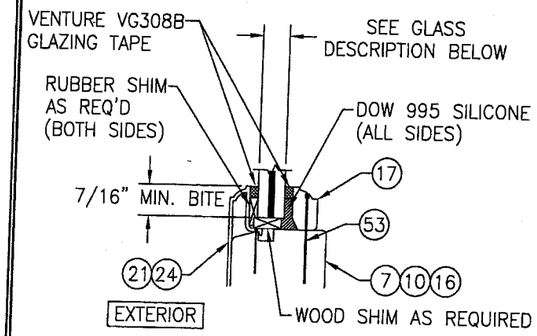

GLAZING DETAIL 1
SCALE: 1/2 FULL

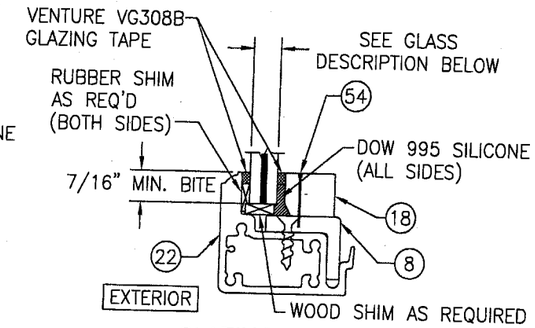

GLAZING DETAIL 2
SCALE: 1/2 FULL

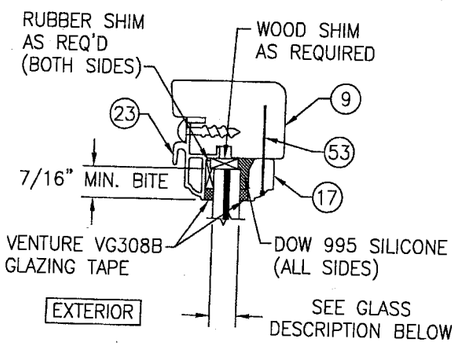

GLAZING DETAIL 3
SCALE: 1/2 FULL

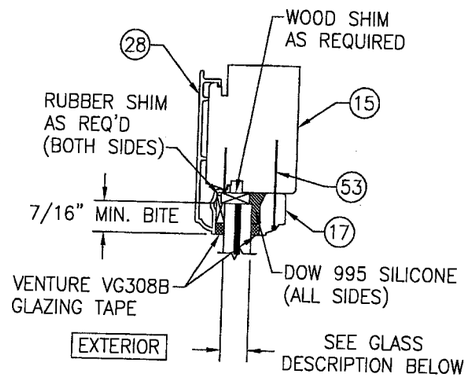

GLAZING DETAIL 4
SCALE: 1/2 FULL

GLASS DESCRIPTION
3/8" SENTRY GLASS PLUS ANNEALED LAMINATED GLASS
(5/32" AN/0.09" SGP/5/32" AN)

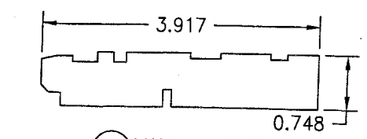

1 HEAD JAMB

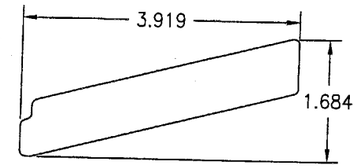

2 SILL PLUG

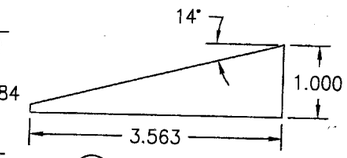

3 SILL BASE

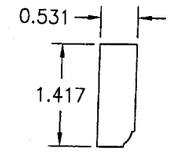

4 INTERIOR HEAD STOP

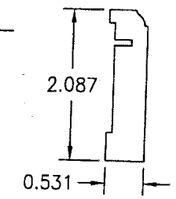

5 STILL STOP

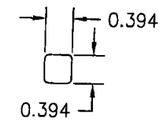

6 HEAD MOLDING

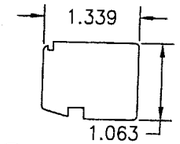

7 FIXED SASH TOP RAIL

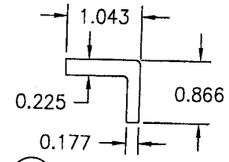

8 FIXED SASH MEETING RAIL COVER

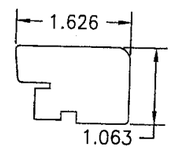

9 OPERABLE SASH TOP RAIL

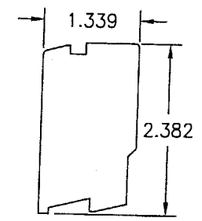

10 BOTTOM RAIL

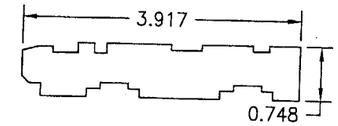

11 SIDE JAMB

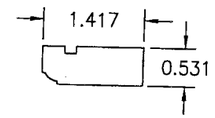

12 INTERIOR SIDE STOP

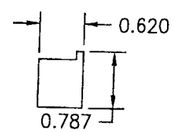

13 JAMB LINER INSERT

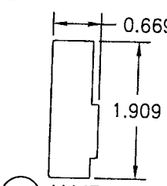

14 JAMB EXPANDER

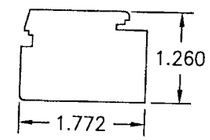

15 FIXED SASH STILE

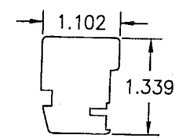

16 OPERABLE SASH STILE

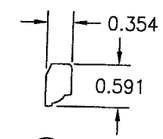

17 GLASS STOP

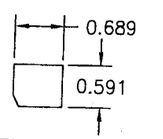

18 FIXED MEETING RAIL GLASS STOP

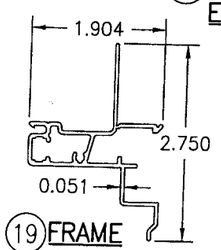

19 FRAME CLADDING

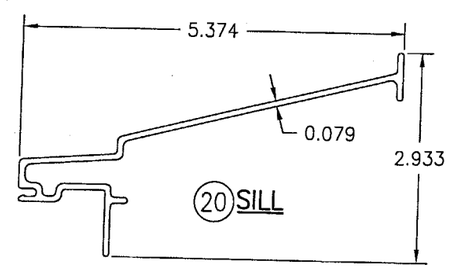

20 SILL

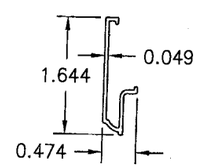

21 RAIL & STILE CLADDING

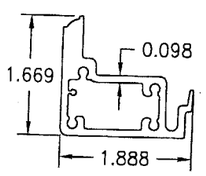

22 FIXED SASH MEETING RAIL

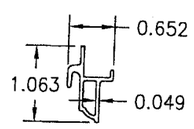

23 OPERABLE MEETING RAIL CLADDING

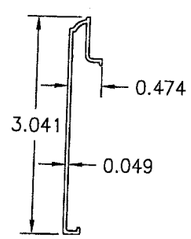

24 BOTTOM RAIL CLADDING

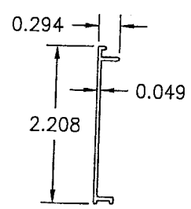

25 JAMB EXPANDER CLADDING

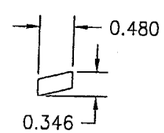

26 SILL BLOCK

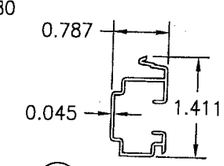

27 JAMB LINER

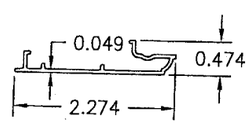

28 FIXED SASH STILE CLADDING

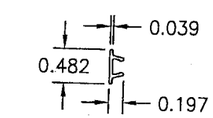

29 EXTRERIOR MULLION COVER

PRODUCT REVISED
as complying with the Florida Building Code
Acceptance No. 04-1209.02
Expiration Date SEPT. 16, 2009
By Miami-Dade Product Control Division

NO.	REVISION DESCRIPTION	BY	DATE

DRAWN BY: K.P.S. | CHECKED BY: W.W.S.
PLOT: 1=2 | DATE: 06/21/04

DRAWING TITLE: ALUMINUM CLAD WOOD IMPACT SINGLE HUNG WINDOW

MANUFACTURER: C.P. LOEWEN ENTERPRISES
77 P.T.H 52 WEST, BOX 2260
STEINBACH, MB CANADA R5G 1B2
204-326-6446

CONSULTANTS: W. W. SCHAEFER ENGINEERING & CONSULTING, P.A.
8895 N. MILITARY TRAIL, SUITE C-204
PALM BEACH GARDENS, FL 33410
PHONE: 561-775-4902 FAX: 561-775-4903

CERTIFICATION
DEC 08 2004
WARREN W. SCHAEFER, P.E.
P.E. NO. 44135

DRAWING NO. 1300 | REV.
SHEET NO. 5 OF 6

ITEM #	PART #	ITEM DESCRIPTION	MANUFACTURER/NOTES
		PARTS	
1	2312	HEAD JAMB	* WOOD
2	2320	SILL PLUG	* WOOD
3	23105	SILL BASE	* WOOD (REQ'D W/SHEAR SCREW MOUNT CONDITION ONLY)
4	2318	INTERIOR HEAD STOP	* WOOD
5	2369	SILL STOP	* WOOD
6	2325	HEAD MOLDING	* WOOD
7	2303	FIXED SASH TOP RAIL	* WOOD
8	2347	FIXED SASH MEETING RAIL COVER	* WOOD
9	2354	OPERABLE SASH TOP RAIL	* WOOD
10	2356	BOTTOM RAIL	* WOOD
11	2313	SIDE JAMB	* WOOD
12	2399	INTERIOR SIDE STOP	* WOOD
13	2349	JAMB LINER INSERT	* WOOD
14	2346	JAMB EXPANDER	* WOOD
15	2348	FIXED SASH STILE	* WOOD
16	2357	OPERABLE SASH STILE	* WOOD
17	2327	GLASS STOP	* WOOD
18	2353	FIXED MEETING RAIL GLASS STOP	* WOOD
19	–	FRAME CLADDING	APEL #695244 – 6060–T5 ALUM.
20	–	SILL	OMNIGLASS #4500 – FIBERGLASS
21	–	RAIL & STILE CLADDING	APEL #637754 – 6060–T5 ALUM.
22	–	FIXED SASH MEETING RAIL	APEL #695374 – 6063–T54 ALUM.
23	–	OPERABLE MEETING RAIL CLADDING	APEL #695375 – 6060–T5 ALUM.
24	–	BOTTOM RAIL CLADDING	APEL #637757 – 6060–T5 ALUM.
25	–	JAMB EXPANDER CLADDING	APEL #637862 – 6060–T5 ALUM.
26	–	SILL BLOCK	APEL #612549 – 6060–T5 ALUM.
27	–	JAMB LINER	SPARTECH #R–2814 – VINYL
28	–	FIXED SASH STILE CLADDING	APEL #637622 – 6060–T5 ALUM.
29	–	EXTERIOR MULLION COVER	APEL #626550 – 6060–T5 ALUM.
		HARDWARE	
32	–	CAM LOCK	TRUTH #17.78
33	–	LOCK KEEPER	TRUTH #40911
34	–	BALANCE	DAKOTA BALANCE #32 DS
35	–	HANDLE	AS REQUIRED TO OPERATE WINDOW
36	–	TILT LATCH	ASHLAND #LH89506, RH89606
		SEALS AND SEALANTS	
37	–	BUBBLE WEATHERSTRIP	INTEK #30172A
38	–	WEATHERSTRIP	SCHLEGEL #PR 0622
39	–	CHECK RAIL BUBBLE WEATHERSTRIP	SSI #CAP–425
		MISC. FASTENERS	
40	–	NO. 8 X 1 1/2" SCREW	4" FROM CORNERS & 8" O.C.
41	–	5/8" BRAD NAIL	WITHIN 1/2" FROM ENDS & 6" O.C.
43	–	15 GA. X 1 1/4" NAIL	1" FROM CORNERS & 6" O.C.
44	–	NO. 5 X 1" P.H. SCREW	1" FROM ENDS & 8" O.C.
45	–	NO. 6 X 3/4" P.H. SCREW	2" FROM ENDS & AT MIDSPAN

* WOOD USED WITH TEST UNITS WAS GRADE 2 NORTHERN DOUGLAS FIR. ALTERNATE WOOD SPECIES TO BE APPLICABLE WITH THESE WINDOWS IS MIN. GRADE 2 MAHOGANY, OAK, CHERRY, MAPLE & CYPRUS.

NOTE: ALL WOOD IS RECEIVED BY LOEWEN WINDOWS AS GRADE 2, BUT IS MACHINED BY LOEWEN TO A SELECT GRADE USE.

ITEM #	PART #	ITEM DESCRIPTION	MANUFACTURER/NOTES
		MISC. FASTENERS	
46	–	NO. 8 X 1" SCREW	12" O.C.
47	–	1 1/4" NAIL	1 1/2" FROM ENDS & 8" O.C.
48	–	1" BRAD NAIL	2" FROM ENDS & 6" O.C.
49	–	NO. 8 X 2" SCREW	4" FROM CORNERS & 8" O.C.
50	–	NO. 8 X 1" SCREW	4" FROM CORNERS & 6" O.C.
51	–	5/8" BRAD NAIL	THRU EXPANDER CLAD AT 6" O.C.
52	–	NO. 6 X 1 1/4" SCREW	2 PER LOCK KEEPER
53	–	16 GA. X 1 1/4" FINISH NAIL	2" FROM CORNERS & 6" O.C.
54	–	16 GA. X 3/4" FINISH NAIL	2" FROM CORNERS & 6" O.C.

PRODUCT REVISED
as complying with the Florida
Building Code
Acceptance No. 04-1209.02
Expiration Date SEPT. 16, 2009
By Manuel Perez
Miami-Dade Product Control
Division

DRAWN BY: K.P.S.	CHECKED BY: W.W.S.
PLOT: 1=2	DATE: 06/21/04

NO.	REVISION DESCRIPTION	BY	DATE

DRAWING TITLE
ALUMINUM CLAD WOOD IMPACT SINGLE HUNG WINDOW

MANUFACTURER
C.P. LOEWEN ENTERPRISES
77 P.T.H 52 WEST, BOX 2260
STEINBACH, MB CANADA R5G 1B2
204–326–6446

CONSULTANTS
W. W. SCHAEFER ENGINEERING & CONSULTING, P.A.
8895 N. MILITARY TRAIL; SUITE C–204
PALM BEACH GARDENS, FL 33410
PHONE: 561–775–4902 FAX: 561–775–4903

CERTIFICATION
DEC 08 2004
WARREN W. SCHAEFER, P.E.
P.E. NO. 44135

DRAWING NO. 1300
REV.
SHEET NO. 6 OF 6