MIAMI-DADE COUNTY

BUILDING CODE COMPLIANCE OFFICE (BCCO)
PRODUCT CONTROL DIVISION

MIAMI-DADE COUNTY, FLORIDA
METRO-DADE FLAGLER BUILDING
140 WEST FLAGLER STREET, SUITE 1603
MIAMI, FLORIDA 33130-1563
(305) 375-2901 FAX (305) 375-2908

NOTICE OF ACCEPTANCE (NOA)

Palm City Millwork, Inc.
P.O. Box 1529
Palm City, FL 34990

SCOPE:

This NOA is being issued under the applicable rules and regulations governing the use of construction materials. The documentation submitted has been reviewed by Miami-Dade County Product Control Division and accepted by the Board of Rules and Appeals (BORA) to be used in Miami Dade County and other areas where allowed by the Authority Having Jurisdiction (AHJ).

This NOA shall not be valid after the expiration date stated below. The Miami-Dade County Product Control Division (In Miami Dade County) and/or the AHJ (in areas other than Miami Dade County) reserve the right to have this product or material tested for quality assurance purposes. If this product or material fails to perform in the accepted manner, the manufacturer will incur the expense of such testing and the AHJ may immediately revoke, modify, or suspend the use of such product or material within their jurisdiction. BORA reserves the right to revoke this acceptance, if it is determined by Miami-Dade County Product Control Division that this product or material fails to meet the requirements of the applicable building code.

This product is approved as described herein, and has been designed to comply with the Florida Building Code, including the High Velocity Hurricane Zone.

DESCRIPTION: Aluminum Clad Wood 10 Feet Outswing French Doors

APPROVAL DOCUMENT: Drawing No. **1229**, titled "10' Aluminum Clad Mahogany 2 1'4" Outswing French Doors", sheets 1 through 7 of 7, prepared by the W.W. Schaefer Engineering & Consulting, P.A., dated 06/02/03, signed and sealed by Warren W. Schaefer, P.E., bearing the Miami-Dade County Product Control Approval stamp with the Notice of Acceptance number and approval date by the Miami-Dade County Product Control Division.

MISSILE IMPACT RATING: Large and Small Missile Impact

LABELING: Each unit shall bear a permanent label with the manufacturer's name or logo, city, state and following statement: "Miami-Dade County Product Control Approved", unless otherwise noted herein.

RENEWAL of this NOA shall be considered after a renewal application has been filed and there has been no change in the applicable building code negatively affecting the performance of this product.

TERMINATION of this NOA will occur after the expiration date or if there has been a revision or change in the materials, use, and/or manufacture of the product or process. Misuse of this NOA as an endorsement of any product, for sales, advertising or any other purposes shall automatically terminate this NOA. Failure to comply with any section of this NOA shall be cause for termination and removal of NOA.

ADVERTISEMENT: The NOA number preceded by the words Miami-Dade County, Florida, and followed by the expiration date may be displayed in advertising literature. If any portion of the NOA is displayed, then it shall be done in its entirety.

INSPECTION: A copy of this entire NOA shall be provided to the user by the manufacturer or its distributors and shall be available for inspection at the job site at the request of the Building Official.

This NOA consists of this page 1 and evidence page E-1, and E-2, as well as approval document mentioned above.
The submitted documentation was reviewed by **Herminio F. Gonzalez, P.E., Director, BCCO**

PRODUCT CONTROL ACCEPTED 3/2/05

NOA No 04-1220.02
Expiration Date: March 24, 2010
Approval Date: March 24, 2005

Palm City Millwork, Inc.

NOTICE OF ACCEPTANCE: EVIDENCE SUBMITTED

A. DRAWINGS

1. Manufacturer's die drawings and sections.
2. Drawing No. **1229**, titled "10' Aluminum Clad Mahogany 2 ¼" Outswing French Doors", sheets 1 through 7 of 7, prepared by the W.W. Schaefer Engineering & Consulting, P.A., dated 06/02/03, signed and sealed by Warren W. Schaefer, P.E.

B. TESTS

1. Test reports on 1) Air Infiltration Test, per FBC, TAS 202-94
   2) Uniform Static Air Pressure Test, Loading per FBC, TAS 202-94
   3) Water Resistance Test, per FBC, TAS 202-94
   4) Large Missile Impact Test per FBC, TAS 201-94
   5) Cyclic Wind Pressure Loading per FBC, TAS 203-94
   6) Forced Entry Test, per FBC 2411 3.2.1 and TAS 202-94

   along with marked-up drawings and installation diagram of an aluminum clad Outswing French door, prepared by Hurricane Test Laboratory, LLC, Test Report No. **HTL-0067-0318-04** dated 03/23-5/5/04, signed and sealed by Vinu J. Abraham, P.E.
2. Test reports on 1) Large Missile Impact Test per FBC, TAS 201-94
   2) Cyclic Wind Pressure Loading per FBC, TAS 203-94

   along with marked-up drawings and installation diagram of an aluminum clad Outswing French door, prepared by Hurricane Test Laboratory, LLC, Test Report No. **HTL-0067-0520-03** dated 05/12-14/03, signed and sealed by Vinu J. Abraham, P.E.
3. Test reports on 1) Air Infiltration Test, per FBC, TAS 202-94
   2) Uniform Static Air Pressure Test, Loading per FBC, TAS 202-94
   3) Water Resistance Test, per FBC, TAS 202-94
   4) Large Missile Impact Test per FBC, TAS 201-94
   5) Cyclic Wind Pressure Loading per FBC, TAS 203-94
   6) Forced Entry Test, per FBC 2411 3.2.1 and TAS 202-94

   along with marked-up drawings and installation diagram of an aluminum clad Outswing French door, prepared by Hurricane Test Laboratory, LLC, Test Report No. **HTL-0067-0627-04** dated 11/17/04, signed and sealed by Vinu J. Abraham, P.E.

C. CALCULATIONS

1. Anchor Calculations and structural analysis, prepared by W.W. Schaefer Engineering & Consulting, P.A., dated 09/28/04, signed and sealed by Warren Schaefer, P.E.

D. QUALITY ASSURANCE

1. Miami Dade Building Code Compliance Office (BCCO).

for M Shaik

Herminio F. Gonzalez, P.E.
Director, Building Code Compliance Office
NOA No 04-1220.02
Expiration Date: March 24, 2010
Approval Date: March 24, 2005

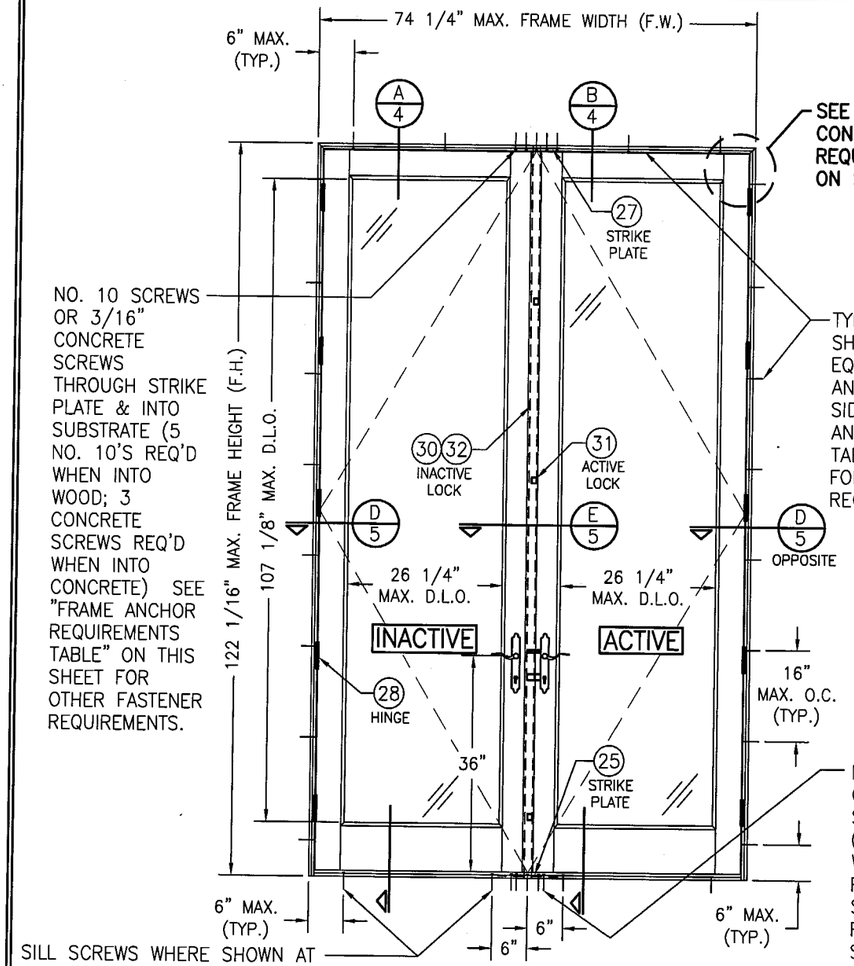

EXTERIOR ELEVATION
DOUBLE OUTSWING DOOR
(RECTANGULAR)
SCALE: 1/2"=1'-0"

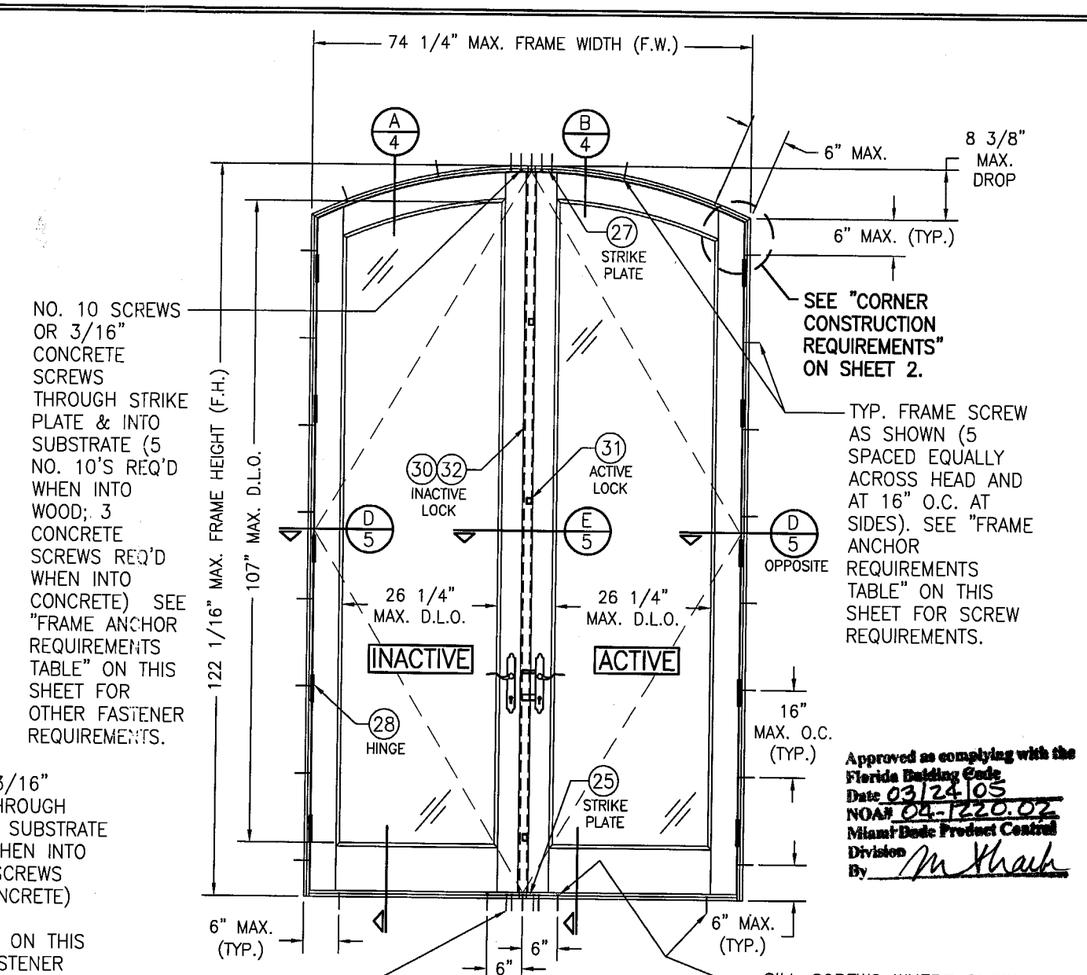

EXTERIOR ELEVATION
DOUBLE OUTSWING DOOR
(ARCH TOP)
SCALE: 1/2"=1'-0"

Approved as complying with the Florida Building Code
Date 03/24/05
NOA# 04-1220.02
Miami-Dade Product Control Division
By M Khalil

GENERAL NOTES

1. THESE DOOR SYSTEMS HAVE BEEN TESTED, ANALYZED AND APPROVED FOR DESIGN PRESSURES NOT TO EXCEED THOSE SHOWN IN THE "ALLOWABLE DESIGN LOADS" TABLE.
2. BUCKING, OPENINGS & BUCKING FASTENERS MUST BE PROPERLY DESIGNED & INSTALLED TO TRANSFER WIND LOADS TO THE STRUCTURE.
3. ALL HARDWARE & FASTENERS SHALL BE IN ACCORDANCE WITH THESE DRAWINGS & MAY NOT VARY UNLESS SPECIFICALLY MENTIONED ON THE DRAWINGS.
4. THE DETAILS & SPECIFICATIONS SHOWN HEREIN REPRESENT THE PRODUCTS TESTED & PROPOSED FOR WATER, AIR, IMPACT, CYCLIC & UNIFORM STATIC AIR PRESSURE TESTING IN CONFORMANCE WITH FLORIDA BUILDING CODE PROTOCOLS TAS-201, 202 & 203 FOR LARGE MISSILE IMPACT DOORS.
5. THESE DOOR SYSTEMS HAVE BEEN DESIGNED IN ACCORDANCE WITH THE FLORIDA BUILDING CODE (F.B.C.).
6. IMPACT SHUTTERS ARE NOT REQUIRED WITH THESE DOORS.
7. ALL ANCHORS SHALL BE INSTALLED AS SPECIFIED ON THESE DRAWINGS. SPECIFIED EMBEDMENT TO BASE MATERIAL SHALL BE BEYOND WALL FINISH OR STUCCO.

* FRAME ANCHOR REQUIREMENTS TABLE

OPENING TYPE (SUBSTRATE)	JAMB TO OPENING FASTENER TYPE	MINIMUM EMBEDMENT	MINIMUM EDGE DIST.
2X_ WOOD FRAME OR BUCK	NO. 10 SMS SCREW	1 1/4"	1"
CMU OR MIN. 2500 PSI CONCRETE	(1) 3/16" CONCRETE SCREWS	1 1/4"	2"

(1) CONCRETE SCREWS SHALL BE ELCO OR ITW RAMSET/RED HEAD TAPCONS, HILTI KWIK-CON II OR POWERS RAWL TAPPER (HARDENED STEEL OR S.S.).

*** ANCHOR NOTE: FRAME MAY BE EITHER DIRECT MOUNTED TO THE OPENING, MOUNTED ONTO A CONTINUOUS WOOD SPACER, OR ANCHORED TO A MIN. 2X4 NO. 3 SOUTHERN PINE WOOD BUCK. WHEN ANCHORED TO A 2X4 BUCK, NO. 10 SCREWS SHALL BE USED. WHEN DIRECT MOUNTED OR MOUNTED WITH SPACER, 3/16" CONCRETE SCREWS SHALL BE USED. SEE "ANCHOR REQUIREMENTS TABLE" FOR EMBED REQUIREMENTS. PROPER MATERIAL SHALL BE USED BETWEEN ALL DISIMILAR MATERIALS (BLOCK/CONCRETE & ALUMINUM).**

HINGE REQUIREMENTS

FRAME HEIGHT	MIN. # OF HINGES
ABOVE 110"	5
84" TO 110"	4
BELOW 84"	3

ALLOWABLE DESIGN LOAD

POSITIVE	NEGATIVE
60 PSF	70 PSF

DRAWN BY: K.P.S.	CHECKED BY: W.W.S.
PLOT: 1=24	DATE: 06/02/03

NO.	REVISION DESCRIPTION	BY	DATE

DRAWING TITLE
10' ALUMINUM CLAD MAHOGANY 2 1/4" OUTSWING FRENCH DOORS

MANUFACTURER
PALM CITY MILLWORK, INC.
3313 S.W. 42ND AVE.
PALM CITY, FL 34990
800-273-5598

CONSULTANTS
W. W. SCHAEFER ENGINEERING & CONSULTING, P.A.
8895 N. MILITARY TRAIL; SUITE C-204
PALM BEACH GARDENS, FL 33410
PHONE: 561-775-4902 FAX: 561-775-4903

CERTIFICATION
JAN 24 2005
WARREN W. SCHAEFER, P.E.
P.E. NO. 44135

DRAWING NO. 1229
REV.
SHEET NO. 1 OF 7

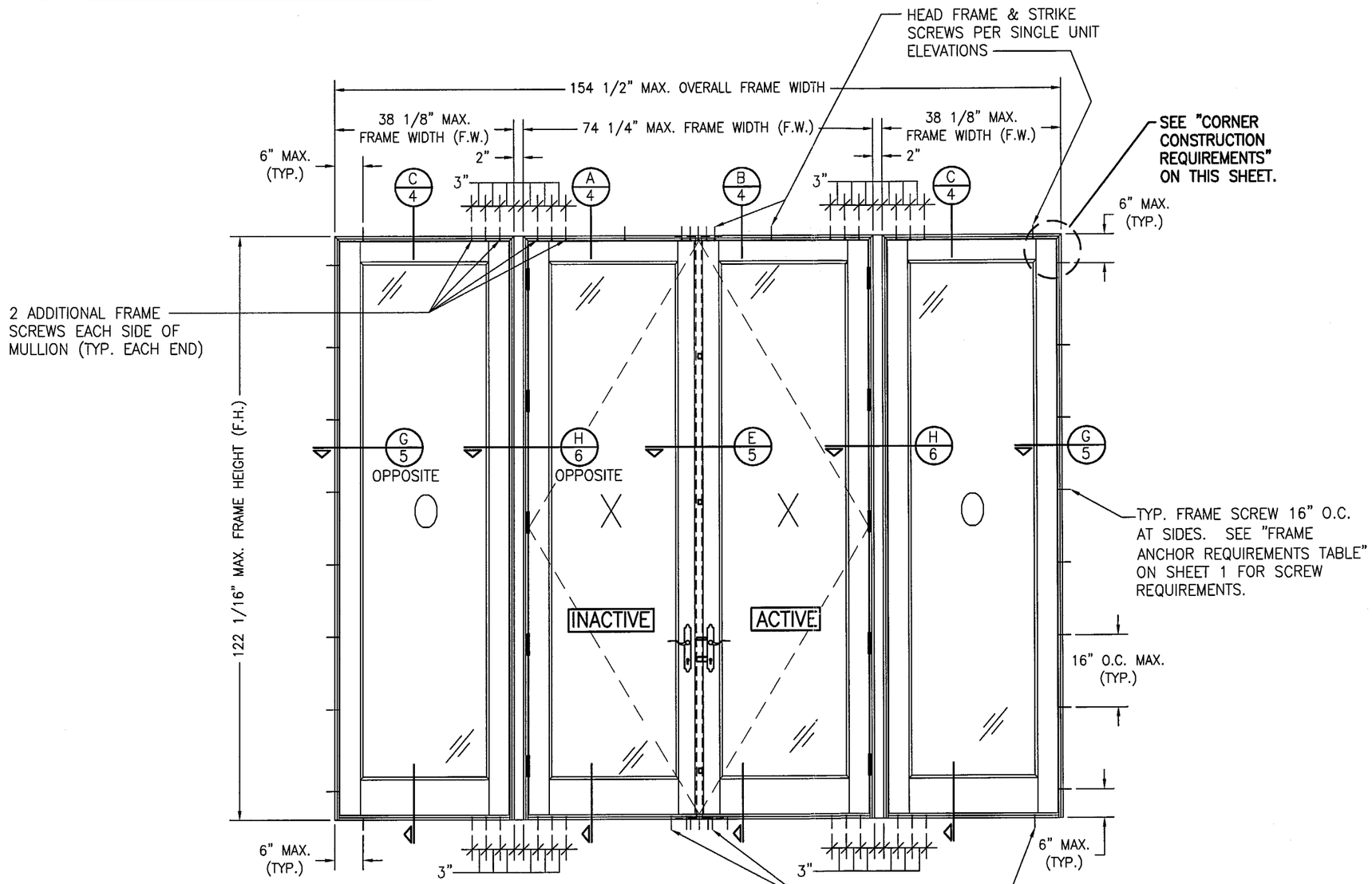

EXTERIOR ELEVATION
XXXO UNIT WITH OUTSWING DOORS

SCALE: 1/2"=1'-0"

NOTE: OXXO DOOR SHOWN. ALL OTHER 4-PANEL CONFIGURATIONS OF SINGLE/DOUBLE DOORS & SIDELIGHTS ALSO APPLY.

(SEE INDIVIDUAL UNIT ELEVATIONS FOR DETAIL NOT SHOWN)

CORNER CONSTRUCTION:

WOOD HEAD JAMB: HEAD JAMB IS COPED & BUTTED TO SIDE JAMB AND SECURED WITH FOUR (4) NO. 10 X 2 1/2" S.S. WOOD SCREWS THRU SIDE JAMBS INTO HEAD JAMB.

WOOD SILL JAMB: SITS ON SYNBOARD SUBSILL, IS BUTTED TO SIDE JAMBS & SECURED WITH 2 NO. 10 X 2 1/2" S.S. SCREWS THROUGH SIDE JAMB INTO WOOD SILL PLUS (4) 18 GA. X 3/4" STAPLES THROUGH SUBSILL & INTO SIDE JAMB. JOINT IS SEALED WITH DOW 1199 SILICONE.

JAMB CLAD: MITERED AND SECURED WITH ONE (1) NO. 8 X 1" S.S. WOOD SCREW.

WOOD SASH: RAILS ARE BUTTED WITH MORTISE & TENON TO STILES AND GLUED WITH FRANKLIN MULTI-BOND WOOD GLUE.

SASH CLAD: BUTTED AND SLID ONTO WOOD MEMBERS

Approved as complying with the Florida Buiding Code
Date 03/24/05
NOA# 04-1220.02
Miami Dade Product Control Division
By M Shark

DRAWN BY: K.P.S.	CHECKED BY: W.W.S.
PLOT: 1=24	DATE: 06/02/03

NO.	REVISION DESCRIPTION	BY	DATE

DRAWING TITLE
10' ALUMINUM CLAD MAHOGANY 2 1/4" OUTSWING FRENCH DOORS

MANUFACTURER
PALM CITY MILLWORK, INC.
3313 S.W. 42ND AVE.
PALM CITY, FL 34990
800-273-5598

CONSULTANTS
W. W. SCHAEFER ENGINEERING & CONSULTING, P.A.
8895 N. MILITARY TRAIL; SUITE C-204
PALM BEACH GARDENS, FL 33410
PHONE: 561-775-4902 FAX: 561-775-4903

CERTIFICATION
JAN 24 2005
WARREN W. SCHAEFER, P.E.
P.E. NO. 44135

DRAWING NO. 1229
REV.
SHEET NO. 2 OF 7

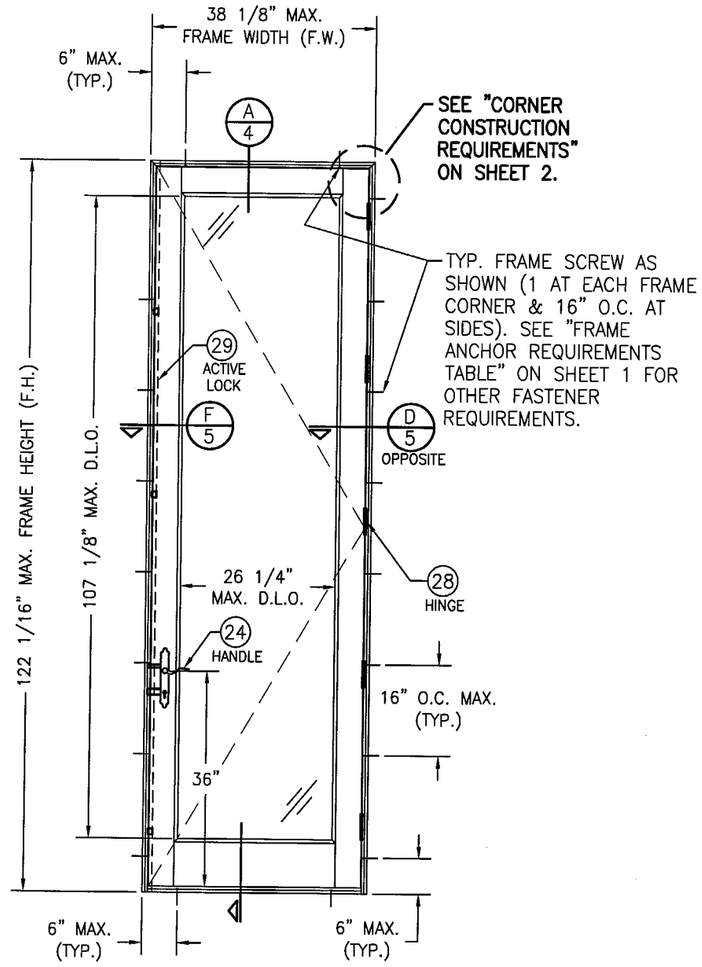

EXTERIOR ELEVATION
SINGLE OUTSWING DOOR

SCALE: 1/2"=1'-0"

NOTE: RECTANGULAR DOOR SHOWN; FULL OR HALF ARCH TOP ALSO APPLICABLE WITHIN LIMITATIONS OF DOUBLE ARCH TOP ELEVATION ON SHEET 1.

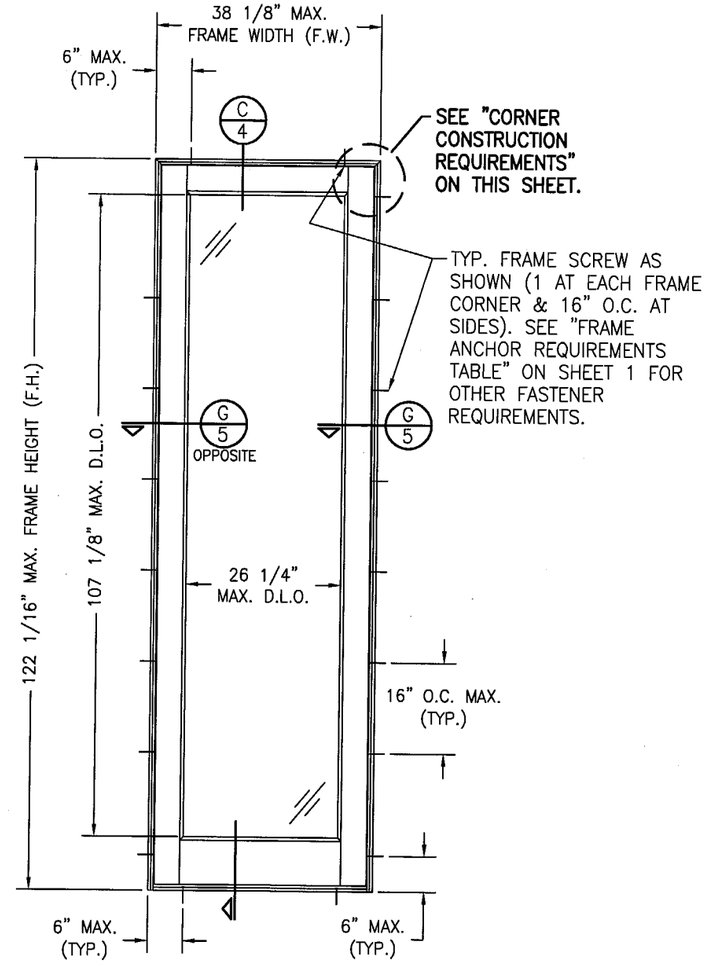

EXTERIOR ELEVATION
SINGLE FIXED PANEL DOOR

SCALE: 1/2"=1'-0"

NOTE: SIDELIGHT PANELS MAY HAVE FULL OR HALF ARCH TOP SAME AS WITH DOORS.

Approved as complying with the Florida Building Code
Date 03/24/05
NOA# 04-1220.02
Miami-Dade Product Control Division
By

DRAWN BY: K.P.S.	CHECKED BY: W.W.S.
PLOT: 1=24	DATE: 06/02/03

NO.	REVISION DESCRIPTION	BY	DATE

DRAWING TITLE
10' ALUMINUM CLAD MAHOGANY 2 1/4" OUTSWING FRENCH DOORS

MANUFACTURER
PALM CITY MILLWORK, INC.
3313 S.W. 42ND AVE.
PALM CITY, FL 34990
800-273-5598

CONSULTANTS
W. W. SCHAEFER ENGINEERING & CONSULTING, P.A.
8895 N. MILITARY TRAIL; SUITE C-204
PALM BEACH GARDENS, FL 33410
PHONE: 561-775-4902 FAX: 561-775-4903

CERTIFICATION
JAN 24 2005
WARREN W. SCHAEFER, P.E.
P.E. NO. 44135

DRAWING NO. 1229
REV.

SHEET NO. 3 OF 7

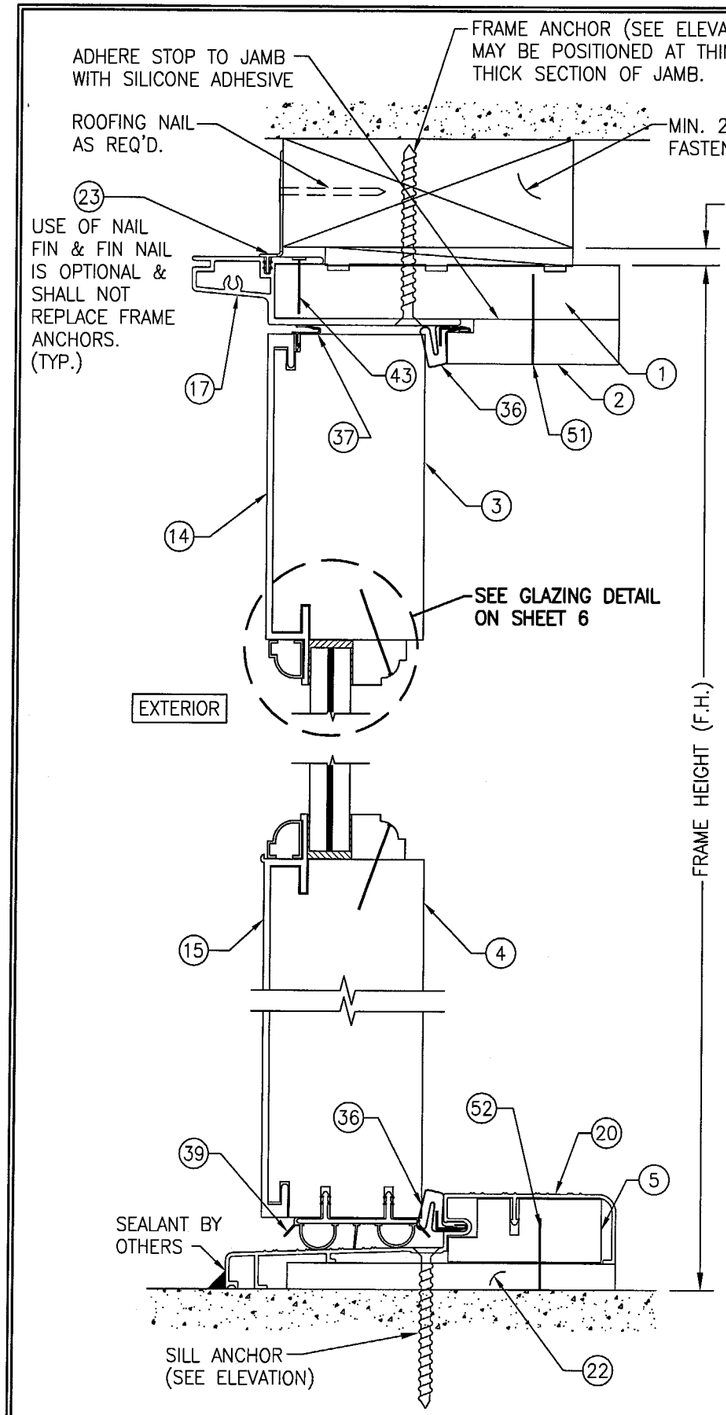

SECTION A/4
SCALE: 1/2 FULL

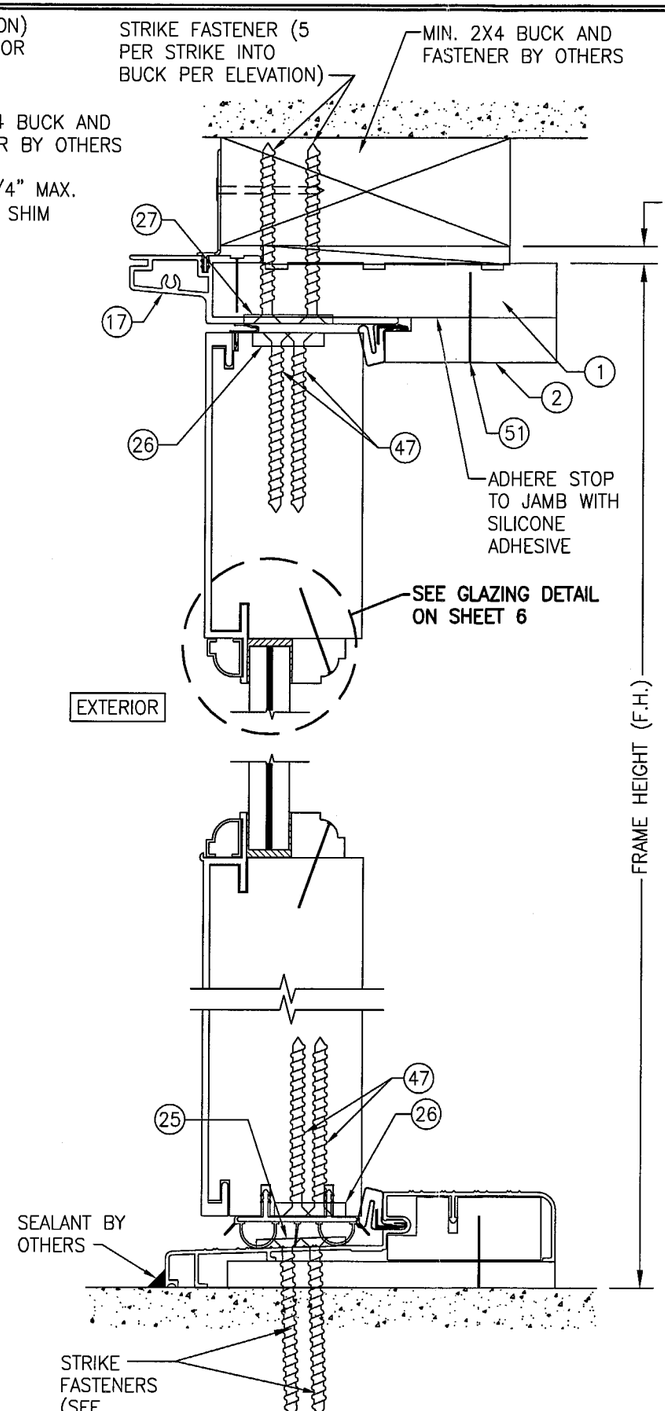

SECTION B/4
SCALE: 1/2 FULL

FOR DETAIL NOT SHOWN, SEE SECTION "A".

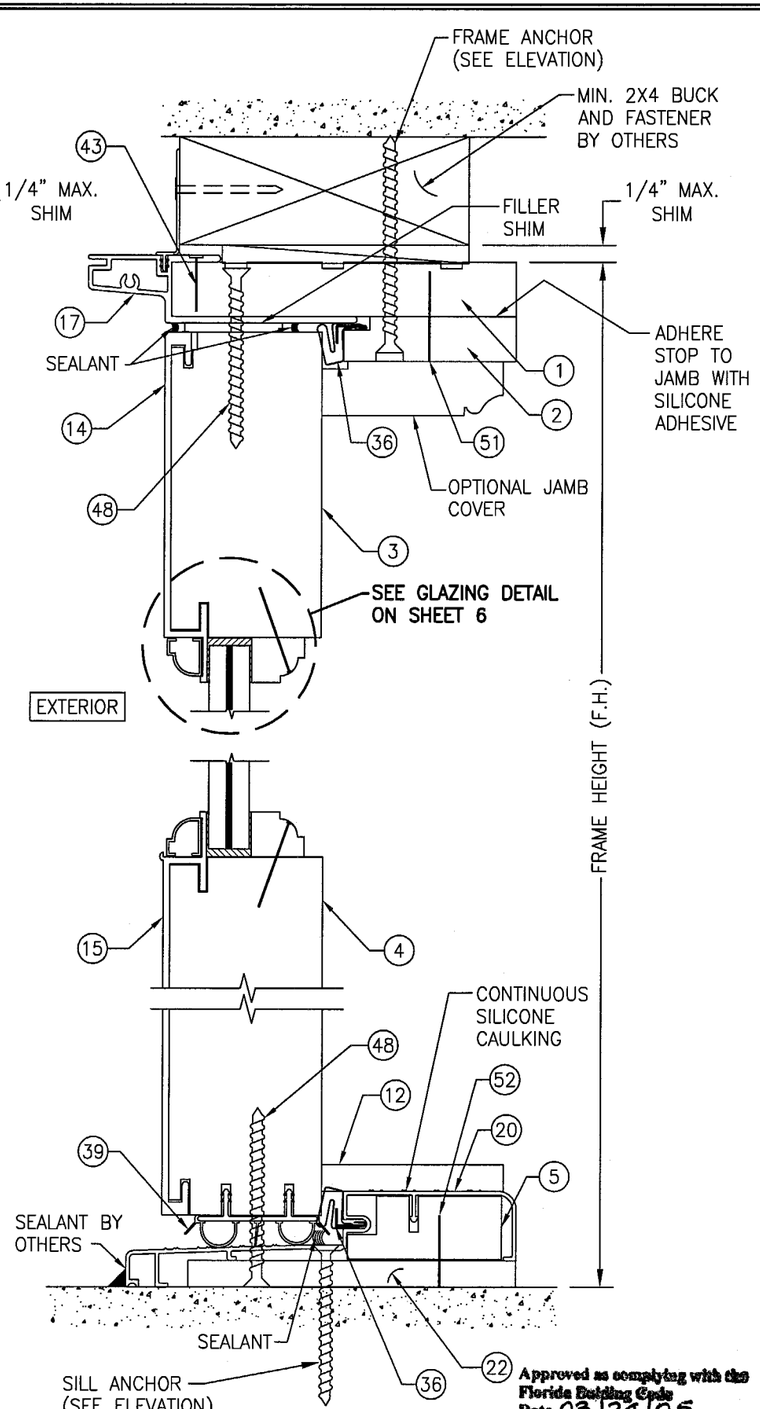

SECTION C/4
SCALE: 1/2 FULL

Approved as complying with the Florida Building Code
Date 03/24/05
NOA# 04-1220.02
Miami-Dade Product Control Division
By

DRAWN BY: K.P.S.	CHECKED BY: W.W.S.
PLOT: 1=2	DATE: 06/02/03

NO.	REVISION DESCRIPTION	BY	DATE

DRAWING TITLE
10' ALUMINUM CLAD MAHOGANY 2 1/4" OUTSWING FRENCH DOORS

MANUFACTURER
PALM CITY MILLWORK, INC.
3313 S.W. 42ND AVE.
PALM CITY, FL 34990
800-273-5598

CONSULTANTS
W. W. SCHAEFER ENGINEERING & CONSULTING, P.A.
8895 N. MILITARY TRAIL; SUITE C-204
PALM BEACH GARDENS, FL 33410
PHONE: 561-775-4902 FAX: 561-775-4903

CERTIFICATION
JAN 24 2005
WARREN W. SCHAEFER, P.E.
FL. REG. NO. 41135

DRAWING NO. 1229
REV.
SHEET NO. 4 OF 7

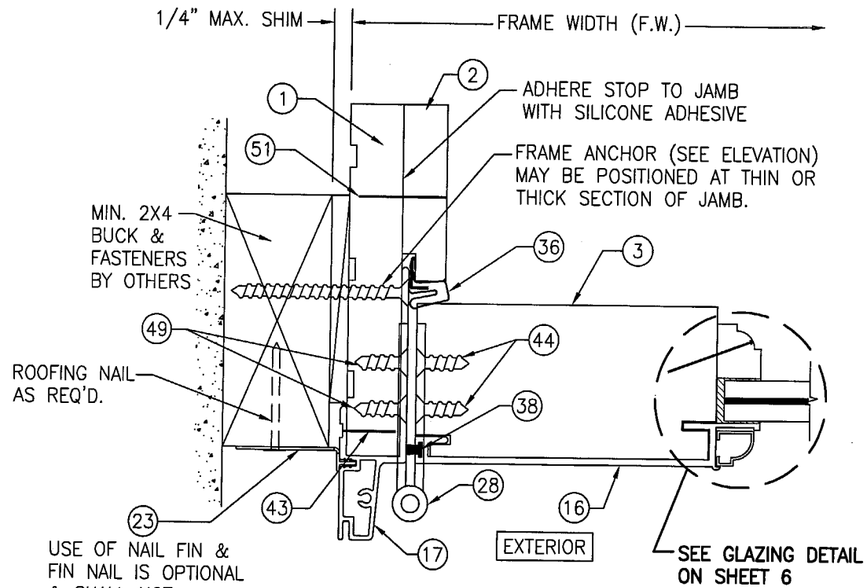

SECTION D/5
SCALE: 1/2 FULL

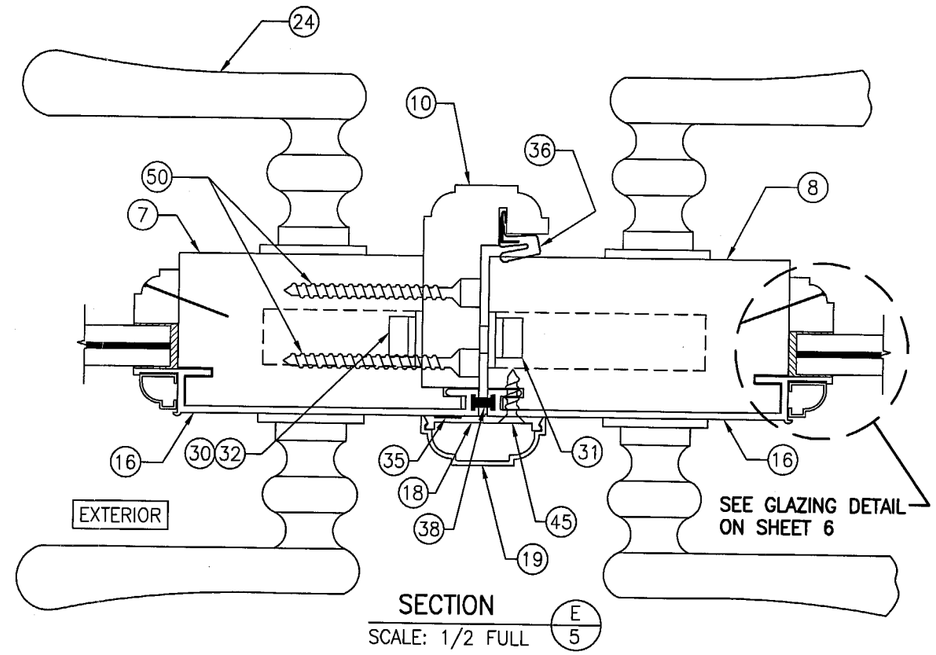

SECTION E/5
SCALE: 1/2 FULL

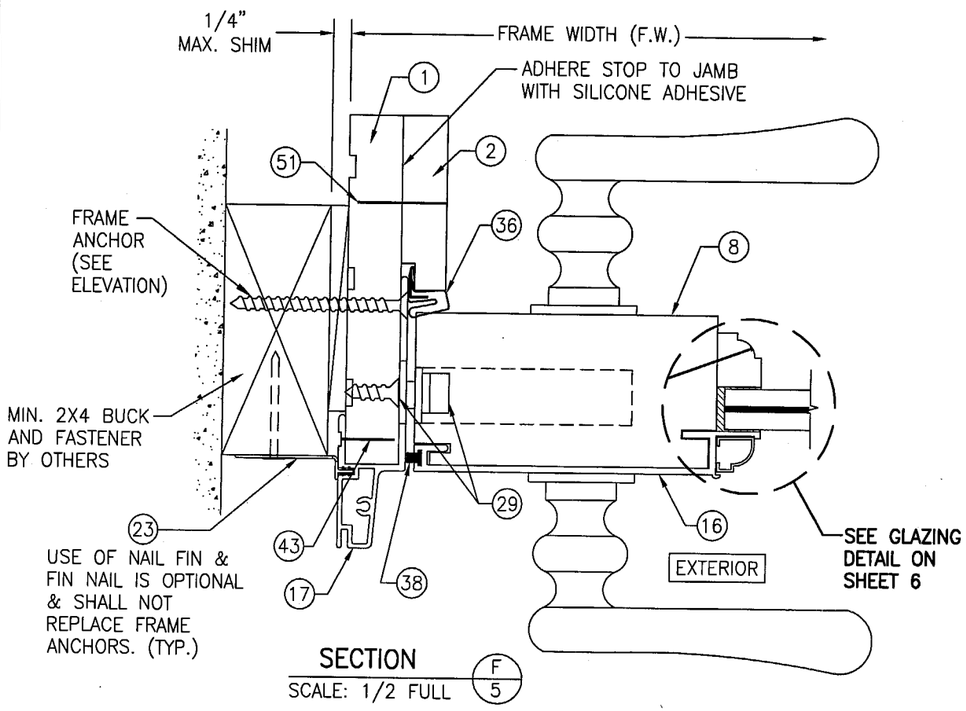

SECTION F/5
SCALE: 1/2 FULL

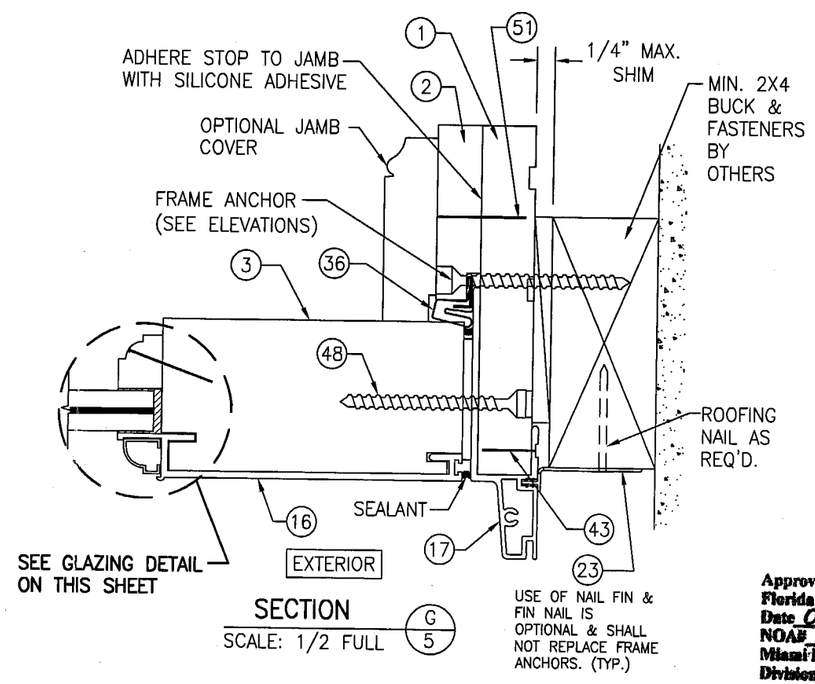

SECTION G/5
SCALE: 1/2 FULL

Approved as complying with the Florida Building Code
Date 03/24/05
NOA# 04-1220.02
Miami-Dade Product Control Division
By M Hrall

DRAWN BY: K.P.S.	CHECKED BY: W.W.S.
PLOT: 1=2	DATE: 06/02/03

NO.	REVISION DESCRIPTION	BY	DATE

DRAWING TITLE
10' ALUMINUM CLAD MAHOGANY 2 1/4" OUTSWING FRENCH DOORS

MANUFACTURER
PALM CITY MILLWORK, INC.
3313 S.W. 42ND AVE.
PALM CITY, FL 34990
800-273-5598

CONSULTANTS
W. W. SCHAEFER ENGINEERING & CONSULTING, P.A.
8895 N. MILITARY TRAIL; SUITE C-204
PALM BEACH GARDENS, FL 33410
PHONE: 561-775-4902 FAX: 561-775-4903

CERTIFICATION
JAN 24 2005
WARREN W. SCHAEFER, P.E.
P.E. NO. 44135

DRAWING NO. 1229
REV.

SHEET NO. 5 OF 7

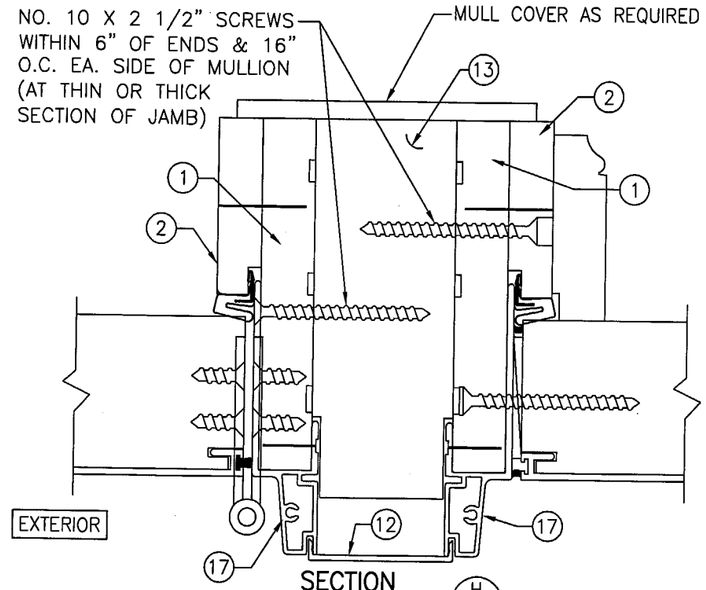

SECTION H/6
SCALE: 1/2 FULL
(FOR DETAIL NOT SHOWN, SEE OTHER SECTIONS)

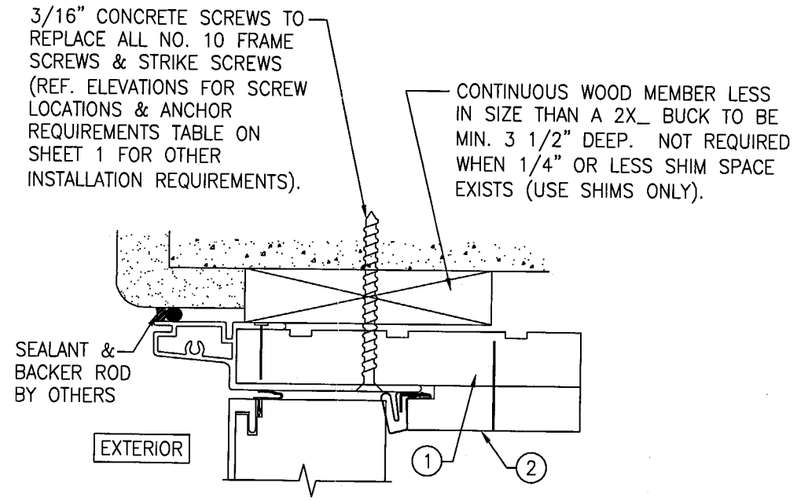

DIRECT MOUNT DETAIL
HEAD DETAIL SHOWN; OTHER JAMBS SIMILAR
SEE OTHER SECTIONS FOR DETAIL NOT SHOWN

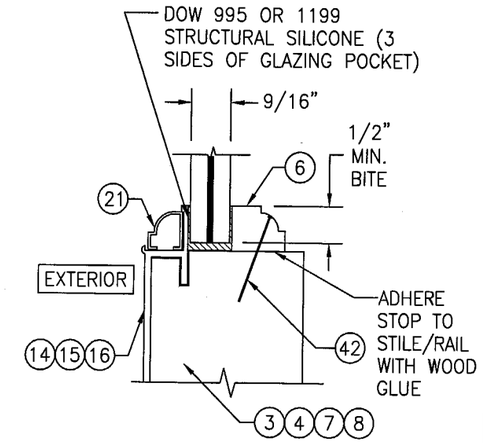

GLAZING DETAIL
SCALE: 1/2 FULL
OPTION #1: 9/16" THICK SOLUTIA SAFLEX LAMINATED GLASS (1/4" ANNEALED/0.090" SAFLEX PVB/1/4" ANNEALED)
OPTION #2: 9/16" THICK DUPONT SGP LAMINATED GLASS (1/4" ANNEALED/0.090" SGP/1/4" ANNEALED)

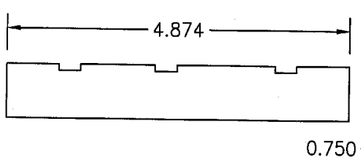

1 HEAD & SIDE JAMB

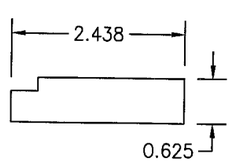

2 DOOR STOP

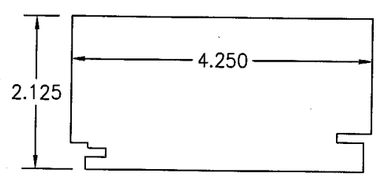

3 TOP RAIL, FIXED PANEL STILE & HINGE STILE

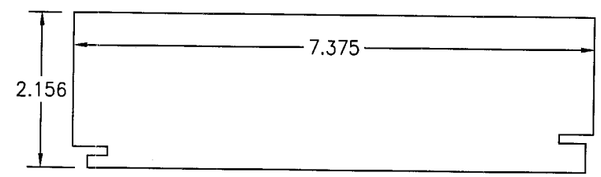

4 BOTTOM RAIL

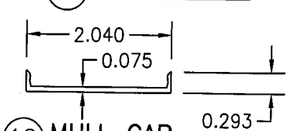

12 MULL CAP

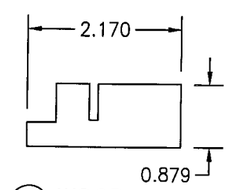

5 WOOD THRESHOLD

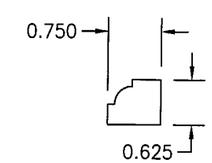

6 GLASS STOP

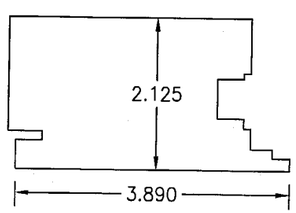

7 INACTIVE LOCKING STILE

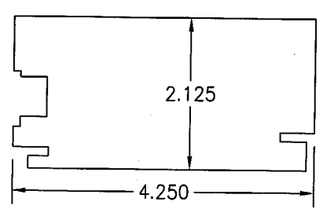

8 ACTIVE LOCKING STILE

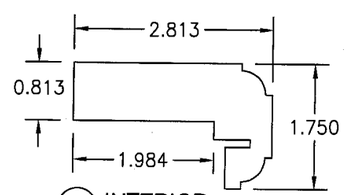

10 INTERIOR ASTRAGAL

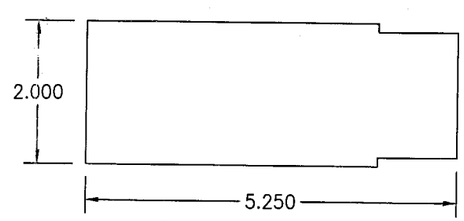

13 MULLION

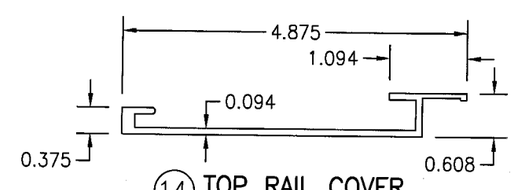

14 TOP RAIL COVER

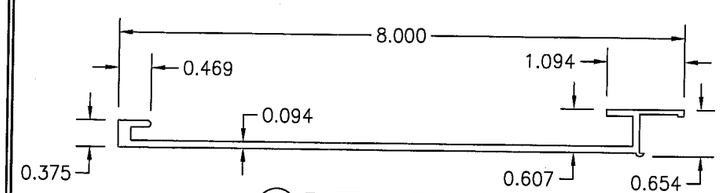

15 BOTTOM RAIL COVER

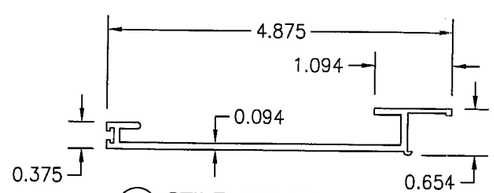

16 STILE COVER

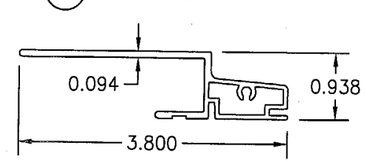

17 JAMB COVER

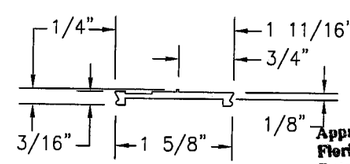

18 EXTERIOR ASTRAGAL BASE

Approved as complying with the Florida Building Code
Date 03/24/05
NOA# 04-1220.02
Miami-Dade Product Control Division
By

DRAWN BY: K.P.S.	CHECKED BY: W.W.S.
PLOT: 1=2	DATE: 06/02/03

NO.	REVISION DESCRIPTION	BY	DATE

DRAWING TITLE
10' ALUMINUM CLAD MAHOGANY 2 1/4" OUTSWING FRENCH DOORS

MANUFACTURER
PALM CITY MILLWORK, INC.
3313 S.W. 42ND AVE.
PALM CITY, FL 34990
800-273-5598

CONSULTANTS
W. W. SCHAEFER ENGINEERING & CONSULTING, P.A.
8895 N. MILITARY TRAIL; SUITE C-204
PALM BEACH GARDENS, FL 33410
PHONE: 561-775-4902 FAX: 561-775-4903

CERTIFICATION
JAN 24 2005
WARREN W. SCHAEFER, P.E.
P.E. NO. 44135

DRAWING NO. 1229
REV.

SHEET NO. 6 OF 7

BILL OF MATERIALS

ITEM #	ITEM DESCRIPTION	MANUFACTURER/NOTES
	PARTS	
1	HEAD & SIDE JAMB	WHITE (SUGAR) PINE
2	DOOR STOP	MAHOGANY
3	TOP RAIL, FIXED PANEL STILE & HINGE STILE	MAHOGANY
4	BOTTOM RAIL	MAHOGANY
5	WOOD THRESHOLD	MAHOGANY
6	GLASS STOP	MAHOGANY
7	INACTIVE LOCKING STILE	MAHOGANY
8	ACTIVE LOCKING STILE	MAHOGANY
10	INTERIOR ASTAGAL	MAHOGANY
12	MULLION COVER	6063-T5 ALUMINUM
13	MULLION	MAHOGANY
14	TOP RAIL COVER	6063-T5 ALUMINUM
15	BOTTOM RAIL COVER	6063-T5 ALUMINUM
16	STILE COVER	6063-T5 ALUMINUM
17	JAMB COVER	6063-T5 ALUMINUM
18	EXTERIOR ASTRAGAL BASE	6063-T5 ALUMINUM
19	EXTERIOR ASTRAGAL COVER	6063-T5 ALUMINUM
20	ALUMINUM THRESHOLD	6063-T5 ALUMINUM
21	OPTIONAL DECORATIVE GLAZING CAP	6063-T5 ALUMINUM
22	SUBSILL (3/8" X 4 5/8" X SILL LENGTH)	COMPOSITE
23	NAIL FIN	VINYL
	HARDWARE	
24	HANDLE	AS REQUIRED TO OPERATE DOOR
25	SILL STRIKE PLATE	6063-T5 ALUMINUM
26	REINFORCEMENT PLATE	304 S.S.
27	HEAD STRIKE PLATE	6063-T5 ALUMINUM
28	HINGE (BRASS, S.S., OR PLATED STEEL)	HAGER #1191 4 1/2" X 4 1/2"
29	3-POINT LOCK HARDWARE	K.F.V. #AS7370
30	2-POINT LOCK HARDWARE	K.F.V. #AS7370
31	5-POINT LOCK HARDWARE	K.F.V. #AS7370
32	FLUSH BOLT ASSEMBLY (TOP & BOTTOM)	HAGER #282 OR KFV AS7000
	SEALS & SEALANTS	
35	FOAM WEATHER STRIPPING	CLEAN SEAL RIBBED FOAM ADHESIVE
36	WEATHER STRIP	SCHLEGEL Q-LON #QEBD-650
37	POLYFLEX SEAL	SCHLEGEL #PF-109
38	SEAL	SCHLEGEL 5/32" BLACK FIN SEAL
39	DOOR SWEEP	VINYL

* WOOD USED WITH TEST UNITS WAS SELECT WHITE PINE AT JAMBS AND SELECT MAHOGANY AT ALL VANEERS, STOPS AND ASTRIGALS. ALTERNATE WOOD SPECIES TO BE APPLICABLE WITH THESE DOORS AS A MAHOGANY SUBSTITUTE IS SELECT RED OAK, REDWOOD, FIR, RED MAPLE, HICKORYICKORY, DOUGLAS FIR, CHERRY OR BIRCH. AS A SUBSTITUTE FOR THE JAMBS, ALL WOODS ABOVE ARE APPLICABLE WITH THE ADDITION OF SOUTHERN PINE & MAPLE.

BILL OF MATERIALS

ITEM #	ITEM DESCRIPTION	MANUFACTURER/NOTES
	FASTENERS	
42	18 GA. X 1" FINISH NAIL	2" FROM CORNERS & 5" MAX. O.C.
43	18 GA. X 7/8" X 3/4" S.S. STAPLES	5" FROM CORNERS & 6" MAX. O.C.
44	#12 X 1 1/8" FH SS WOOD SCREW	4 PER HINGE INTO DOOR PANEL
45	#8 X 3/4" S.S. SCREW	6" FROM TOP & BOTTOM & 6" MAX. O.C.
46	#8 X 1" FH WOOD SCREW	3 PER HEAD STRIKE PLATE
47	#10 X 2 1/2" FH SS SMS	6 PER REINFORCEMENT PLATE
48	#10 X 2 1/2" FH SS SMS	5" FROM ENDS & 16" MAX. O.C.
49	#12 X 3/4" WOOD SCREW	4 PER HINGE INTO JAMB
50	#10 X 2 1/2" FH SS WOOD SCREW	TWO 2" FROM TOP & BOT. & 12" O.C., STAGGERED
51	18 GA. X 1 1/4" BRAD NAIL	WITHIN 3" OF CORNERS & MAX. 12" O.C.
52	18 GA. X 1" FINISH NAIL	3" O.C. STAGGERED

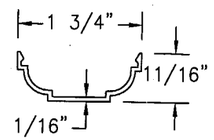

(19) EXTERIOR ASTRAGAL COVER

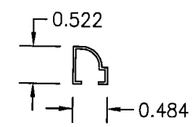

(21) OPTIONAL DECORATIVE GLAZING CAP

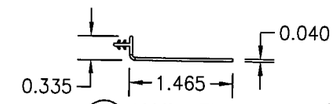

(23) NAIL FIN

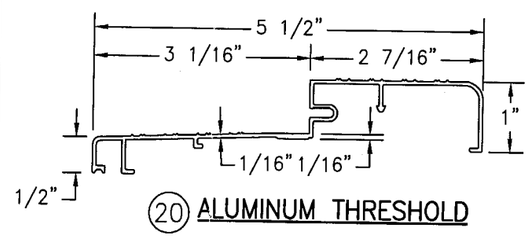

(20) ALUMINUM THRESHOLD

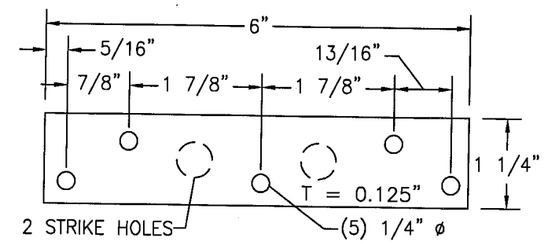

(25) SILL STRIKE PLATE

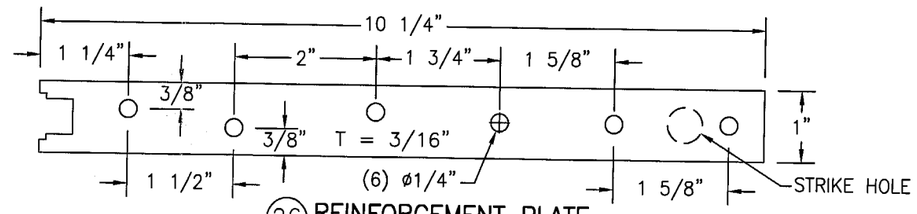

(26) REINFORCEMENT PLATE

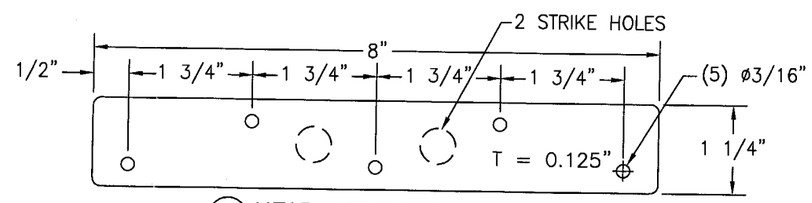

(27) HEAD STRIKE PLATE

Approved as complying with the Florida Building Code
Date 03/24/05
NOA# 04-1220.02
Miami-Dade Product Control Division
By

NO.	REVISION DESCRIPTION	BY	DATE

DRAWN BY: K.P.S. | CHECKED BY: W.W.S.
PLOT: 1=2 | DATE: 06/02/03

DRAWING TITLE
10' ALUMINUM CLAD MAHOGANY 2 1/4" OUTSWING FRENCH DOORS

MANUFACTURER
PALM CITY MILLWORK, INC.
3313 S.W. 42ND AVE.
PALM CITY, FL 34990
800-273-5598

CONSULTANTS
W. W. SCHAEFER ENGINEERING & CONSULTING, P.A.
8895 N. MILITARY TRAIL; SUITE C-204
PALM BEACH GARDENS, FL 33410
PHONE: 561-775-4902 FAX: 561-775-4903

CERTIFICATION
JAN 24 2005
WARREN W. SCHAEFER P.E.
P.E. NO. 44135

DRAWING NO. 1229 | REV.

SHEET NO. 7 OF 7