MIAMI-DADE COUNTY

BUILDING CODE COMPLIANCE OFFICE (BCCO)
PRODUCT CONTROL DIVISION

MIAMI-DADE COUNTY, FLORIDA
METRO-DADE FLAGLER BUILDING
140 WEST FLAGLER STREET, SUITE 1603
MIAMI, FLORIDA 33130-1563
(305) 375-2901 FAX (305) 375-2908
www.buildingcodeonline.com

NOTICE OF ACCEPTANCE (NOA)

PGT Industries
1070 Technology Drive
Nokomis, FL 34275

SCOPE:

This NOA is being issued under the applicable rules and regulations governing the use of construction materials. The documentation submitted has been reviewed by Miami-Dade County Product Control Division and accepted by the Board of Rules and Appeals (BORA) to be used in Miami Dade County and other areas where allowed by the Authority Having Jurisdiction (AHJ).

This NOA shall not be valid after the expiration date stated below. The Miami-Dade County Product Control Division (In Miami Dade County) and/or the AHJ (in areas other than Miami Dade County) reserve the right to have this product or material tested for quality assurance purposes. If this product or material fails to perform in the accepted manner, the manufacturer will incur the expense of such testing and the AHJ may immediately revoke, modify, or suspend the use of such product or material within their jurisdiction. BORA reserves the right to revoke this acceptance, if it is determined by Miami-Dade County Product Control Division that this product or material fails to meet the requirements of the applicable building code.

This product is approved as described herein, and has been designed to comply with the Florida Building Code, including High Velocity Hurricane Zone of the Florida Building Code.

DESCRIPTION: Series "SGD-2500" Aluminum Sliding Glass Door-N.I.

APPROVAL DOCUMENT: Drawing No.**757**, titled "Alum. Sliding Glass Door, Non-Impact", sheets 1 through 13 of 13, dated 09/08/04, with last revision "G" on 07/10/06, prepared by PGT, signed and sealed by Robert L. Clark, P.E., bearing the Miami-Dade County Product Control Revision stamp with the Notice of Acceptance number and expiration date by the Miami-Dade County Product Control Division.

MISSILE IMPACT RATING: None

LABELING: Each unit shall bear a permanent label with the manufacturer's name or logo, city, state and following statement: "Miami-Dade County Product Control Approved", unless otherwise noted herein.

RENEWAL of this NOA shall be considered after a renewal application has been filed and there has been no change in the applicable building code negatively affecting the performance of this product.

TERMINATION of this NOA will occur after the expiration date or if there has been a revision or change in the materials, use, and/or manufacture of the product or process. Misuse of this NOA as an endorsement of any product, for sales, advertising or any other purposes shall automatically terminate this NOA. Failure to comply with any section of this NOA shall be cause for termination and removal of NOA.

ADVERTISEMENT: The NOA number preceded by the words Miami-Dade County, Florida, and followed by the expiration date may be displayed in advertising literature. If any portion of the NOA is displayed, then it shall be done in its entirety.

INSPECTION: A copy of this entire NOA shall be provided to the user by the manufacturer or its distributors and shall be available for inspection at the job site at the request of the Building Official.

This NOA **revises NOA 03-0123.08** and consists of this page 1 and evidence page E-1 and E-2, as well as approval document mentioned above.

The submitted documentation was reviewed by **Jaime D. Gascon, P.E.**

PRODUCT CONTROL ACCEPTED

J. Gascon
8/23/06

PGT Industries

NOTICE OF ACCEPTANCE: EVIDENCE SUBMITTED

A. DRAWINGS

1. Manufacturer's die drawings and sections.
2. Drawing No.**757**, titled "Alum. Sliding Glass Door, Non-Impact", sheets 1 through 13 of 13, dated 09/08/04, with last revision "G" on 07/10/06, prepared by PGT, signed and sealed by Robert L. Clark, P.E.

B. TESTS

1. Test reports on 1) Air Infiltration Test, per FBC, TAS 202-94
   2) Uniform Static Air Pressure Test, Loading per FBC, TAS 202-94
   3) Water Resistance Test, per FBC, TAS 202-94
   4) Forced Entry Test, per FBC 2411 3.2.1 and TAS 202-94
   along with marked-up drawings and installation diagram of an aluminum sliding glass door, prepared by Fenestration Testing Laboratory, Test Report No. **FTL 01083(FTL3102)**, dated 6/18/01, signed and sealed by Luis Figueredo, P.E.
2. Test reports on 1) Air Infiltration Test, per FBC, TAS 202-94
   2) Uniform Static Air Pressure Test, Loading per FBC, TAS 202-94
   along with marked-up drawings and installation diagram of an aluminum sliding glass door, prepared by Fenestration Testing Laboratory, Test Report No. **FTL 01084 (FTL-3116)**, dated 6/19/01, signed and sealed by Luis Figueredo, P.E.
3. Test reports on 1) Air Infiltration Test, per FBC, TAS 202-94
   2) Uniform Static Air Pressure Test, Loading per FBC, TAS 202-94
   along with marked-up drawings and installation diagram of an aluminum sliding glass door, prepared by Fenestration Testing Laboratory, Test Report No. **FTL 01085 (FTL-3117)**, dated 6/19/01, signed and sealed by Luis Figueredo, P.E.
   Additional test report **No. FTL-3596 (FTL02080)** for XXX configuration
4. Test reports on 1) Uniform Static Air Pressure Test, Loading per FBC, TAS 202-94 along with marked-up drawings and installation diagram of an aluminum sliding glass door (XXXO), prepared by Fenestration Testing Laboratory, Test Report No. **FTL-4341**, dated 9/28/04, signed and sealed by Edmundo Largaespada, P.E.
5. Test reports on 1) Uniform Static Air Pressure Test, Loading per FBC, TAS 202-94
   2) Water Resistance Test, per FBC, TAS 202-94
   3) Forced Entry Test, per FBC 2411 3.2.1 and TAS 202-94
   along with marked-up drawings and installation diagram of an aluminum sliding glass door (XXXO), prepared by Fenestration Testing Laboratory, Test Report No. **FTL-4273**, dated 7/22/04, signed and sealed by Edmundo Largaespada, P.E.
6. Test reports on 1) Uniform Static Air Pressure Test, Loading per FBC, TAS 202-94 along with marked-up drawings and installation diagram of an aluminum sliding glass door (XXXO), prepared by Fenestration Testing Laboratory, Test Report No. **FTL-4275**, dated 07/22/04, signed and sealed by Edmundo Largaespada, P.E.

Jaime D. Gascon, P.E.
Chief, Product Control Division
NOA No 04-1220.05
Expiration Date: May 22, 2008
Approval Date: August 23, 2006

NOTICE OF ACCEPTANCE: EVIDENCE SUBMITTED

7. Test reports on 1) Uniform Static Air Pressure Test, Loading per FBC, TAS 202-94 along with marked-up drawings and installation diagram of an aluminum sliding glass door (XXXO), prepared by Fenestration Testing Laboratory, Test Report No. **FTL-4277**, dated 07/23/04, signed and sealed by Edmundo Largaespada, P.E.
8. Test reports on 1) Uniform Static Air Pressure Test, Loading per FBC, TAS 202-94 along with marked-up drawings and installation diagram of an aluminum sliding glass door (XXXO), prepared by Fenestration Testing Laboratory, Test Report No. **FTL-4278**, dated 07/23/04, signed and sealed by Edmundo Largaespada, P.E.
9. Test reports on 1) Uniform Static Air Pressure Test, Loading per FBC, TAS 202-94 along with marked-up drawings and installation diagram of an aluminum sliding glass door (XXXO), prepared by Fenestration Testing Laboratory, Test Report No. **FTL-4280**, dated 07/26/04, signed and sealed by Edmundo Largaespada, P.E.
10. Test reports on 1) Uniform Static Air Pressure Test, Loading per FBC, TAS 202-94 along with marked-up drawings and installation diagram of an aluminum sliding glass door (XXXO), prepared by Fenestration Testing Laboratory, Test Report No. **FTL-4285**, dated 07/23/04, signed and sealed by Edmundo Largaespada, P.E.

C. CALCULATIONS

1. **Revised** Comparative analysis & anchor verification calculations signed and sealed by Robert L. Clark, P.E.
2. Glazing complies w/ ASTM E-1300-98.

D. QUALITY ASSURANCE BY:

1. Miami-Dade Building Code Compliance Office (BCCO).

E. MATERIAL CERTIFICATIONS

1. None

F. STATEMENTS

1. Statement letter of conformance, and "No financial interest" dated 1/7/03, signed and sealed by Robert L. Clark, P.E. (Submitted under NOA No. 03-0123.08)
2. Laboratory compliance letter, as part of Test Report no. FTL 3102, FTL 3116, FTL 3117, FTL 3596, FTL 4273, FTL 4275, FTL 4277, FTL 4278, FTL 4280, FTL 4285 and FTL 4341, issued by Fenestration Testing Laboratory.

G. OTHER

1. This NOA **revises NOA 03-0123.08**, expiring May 22, 2008.

Jaime D. Gascon, P.E.
Chief, Product Control Division
NOA No 04-1220.05
Expiration Date: May 22, 2008
Approval Date: August 23, 2006

GENERAL NOTES: NON-IMPACT SLIDING GLASS DOOR AND 60" COUNTER TOP UNIT.

1. GLAZING OPTIONS:
   A. 3/16" ANNEALED GLASS. 60" HIGH COUNTER TOP APPLICATION ONLY, TEST REPORT FTL-4278.
   B. 3/16" TEMPERED GLASS. TEST REPORTS FTL-3116, FTL3117 AND FTL-4277.
   C. 1/4" TEMPERED GLASS. TEST REPORT FTL-3102.
   D. 5/8" INSULATED GLASS (I.G.); (2) LITES OF 3/16" TEMPERED GLASS WITH A 1/4" AIR SPACE. TEST REPORTS FTL-4273, FTL-4275, FTL-4280, FTL-4285 AND FTL-4341.

2. CONFIGURATIONS: SEE SHEET 4.

3. DESIGN PRESSURES: SEE TABLES 1-3 ON SHEETS 2 AND 3.
   A. NEGATIVE DESIGN LOADS BASED ON TESTED PRESSURE AND GLASS TABLES ASTM E 1300-98.
   B. POSITIVE DESIGN LOADS BASED ON WATER TEST PRESSURE AND GLASS TABLES ASTM E 1300-98.

4. ANCHORAGE: THE 33 1/3% STRESS INCREASE HAS NOT BEEN USED IN THE DESIGN OF THIS PRODUCT. FOR ANCHORAGE DETAILS, SEE SHEETS 12 AND 13.

5. MIAMI-DADE COUNTY APPROVED SHUTTERS ARE REQUIRED IN MIAMI-DADE COUNTY AND WHERE IMPACT RESISTANCE IS REQUIRED..

6. INSTALLATION SCREWS, FRAME AND PANEL CORNERS SEALED WITH SCHNEE/MOREHEAD SEAM SEALER.

7. REFERENCE TEST REPORTS: FTL-3102, FTL-3116, FTL-3117, FTL-3596, FTL-4273, FTL-4275, FTL-4277, FTL-4278, FTL-4280, FTL-4285 AND FTL-4341.

NOA DRAWING MAP

	SHEET
GENERAL NOTES.....	1
GLAZING DETAILS.....	1
DESIGN PRESSURES.....	2-3
CONFIGURATIONS.....	4
ELEVATIONS.....	5
VERT. SECTIONS.....	6
HORIZ. SECTIONS.....	7
"X" & "O" CLIP INSTALL....	8
PARTS LIST.....	9
EXTRUSIONS.....	10-11
ANCHORAGE.....	12-13

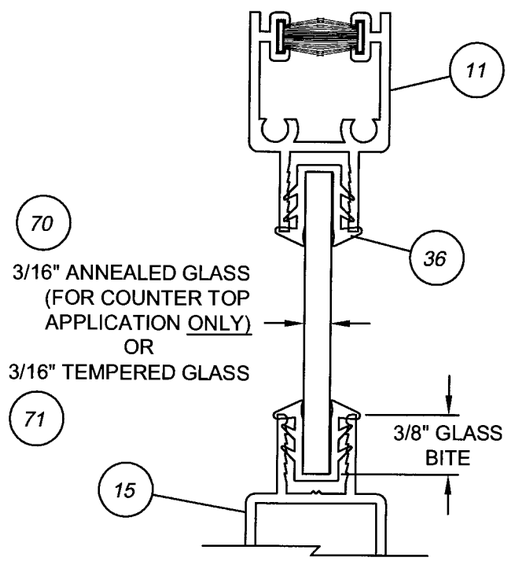

3/16" MONOLITHIC GLASS

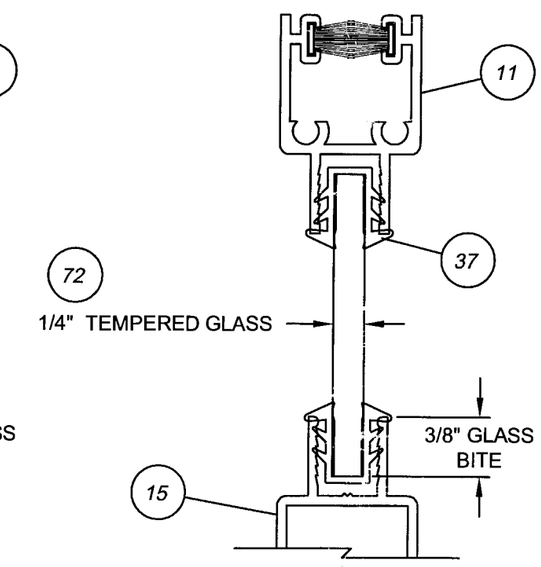

1/4" MONOLITHIC GLASS

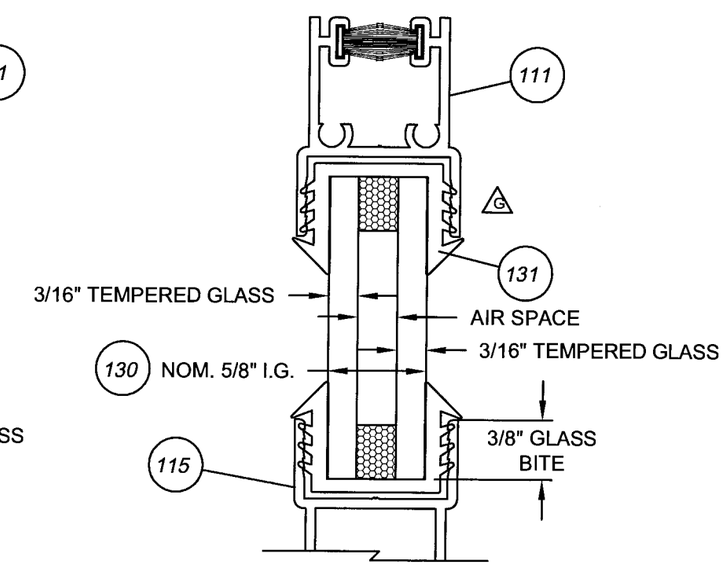

5/8" I.G. GLASS

PRODUCT REVISED
as complying with the Florida Buiding Code
Acceptance No 04-1220.05
Expiration Date 05/22/08
By _____
Miami Dade Product Control Division

7/10/06
Robert L. Clark, P.E.
PE #39712
Structural

Revsd By:	Date:	Revisions:	
F.K.	09/08/04	E	REDRAWN. ADD I.G. GLASS, P-HOOK & COUNTER TOP UNIT
Revsd By: F.K.	Date: 03/02/05	Revisions: F	REVISE NOTES 3 (DPs) & 4 (ANCHORAGE)
Revsd By: F.K.	Date: 07/10/06	Revisions: G	SHOW AIR SPACER I.G. GLAZING DETAIL
Drawn By: F.K.	Date: 09/08/04	Checked By: J.J.	Date: 04/02/06

1070 TECHNOLOGY DRIVE
NOKOMIS, FL 34275

P.O. BOX 1529
NOKOMIS, FL 34274

PGT
Visibly Better

Description: NOTES, GLAZING DETAILS & MAP

Title: ALUM. SLIDING GLASS DOOR, NON-IMPACT

Series/Model:	Scale:	Sheet:	Drawing No.	Rev:
SGD2500	NTS	1 of 13	757	G

COMPARATIVE ANALYSIS:

A. FTL-4278; 3/16" ANNEALED (COUNTER TOP APPLICATION ONLY)

B. FTL-3117 & FTL-4277; 3/16" TEMPERED

D. FTL-4280 & FTL-4285; 5/8" TEMPERED I.G. (3/16"T, 1/4"SPACE, 3/16"T)

TABLE 1.

>EXTENDED SILL, 2 1/2" HIGH

>SINGLE/SINGLE INTERLOCK

>NO REINFORCEMENT (SEE SECTIONS C-C AND D-D DETAILS, SHEET 7 OF 13)

NOM. PANEL WIDTH		OVER-ALL UNIT HEIGHT									
		36" (3^0)	42" (3^6)	48" (4^0)	54" (4^6)	60" (5^0)	72" (6^0)	80" (6^8)	84" (7^0)	90" (7^6)	96" (8^0)
24" (2^0)	A	+65.3 -99.0	+65.3 -85.7	+65.3 -74.6	+65.3 -66.7	+61.1 -61.1					
	B	+65.3 -130.0	+65.3 -130.0	+65.3 -130.0	+65.3 -130.0	+65.3 -130.0	+65.3 -112.0	+65.3 -98.8	+65.3 -70.0	+64.6 -64.6	+60.0 -60.0
	D	+65.3 -130.0	+65.3 -130.0	+65.3 -130.0	+65.3 -130.0	+65.3 -130.0	+65.3 -121.3	+65.3 -107.1	+65.3 -80.0	+65.3 -73.8	+65.3 -68.6
30" (2^6)	A	+65.3 -78.9	+65.3 -66.8	+57.3 -57.3	+50.0 -50.0	+44.3 -44.3					
	B	+65.3 -130.0	+65.3 -130.0	+65.3 -130.0	+65.3 -130.0	+65.3 -119.5	+65.3 -94.3	+65.3 -82.7	+58.4 -58.4	+53.8 -53.8	+49.8 -49.8
	D	+65.3 -130.0	+65.3 -130.0	+65.3 -130.0	+65.3 -130.0	+65.3 -129.4	+65.3 -102.2	+65.3 -89.6	+65.3 -66.8	+61.4 -61.4	+56.9 -56.9
36" (3^0)	A	+65.3 -68.1	+58.8 -58.8	+50.7 -50.7	+44.3 -44.3	+39.4 -39.4					
	B	+65.3 -106.7	+65.3 -106.7	+65.3 -106.7	+65.3 -106.7	+65.3 -106.7	+65.3 -83.0	+65.3 -72.3	+50.9 -50.9	+46.7 -46.7	+43.1 -43.1
	D	+65.3 -115.6	+65.3 -115.6	+65.3 -115.6	+65.3 -115.6	+65.3 -115.6	+65.3 -89.9	+65.3 -78.3	+58.2 -58.2	+53.3 -53.3	+49.2 -49.2
42" (3^6)	A	+58.5 -58.5	+52.7 -52.7	+46.7 -46.7	+41.0 -41.0	+37.3 -37.3					
	B	+65.3 -80.0	+65.3 -78.4	+65.3 -78.4	+65.3 -78.4	+65.3 -78.4	+65.3 -75.3	+65.1 -65.1	+45.7 -45.7	+41.7 -41.7	+38.4 -38.4
	D	+65.3 -86.7	+65.3 -84.9	+65.3 -84.9	+65.3 -84.9	+65.3 -84.9	+65.3 -81.6	+65.3 -70.5	+52.2 -52.2	+47.7 -47.7	+43.9 -43.9
48" (4^0)	A	+50.4 -50.4	+46.3 -46.3	+42.8 -42.8	+38.5 -38.5	+34.7 -34.7					
	B	+64.0 -64.0	+61.0 -61.0	+60.0 -60.0	+60.0 -60.0	+60.0 -60.0	+60.0 -60.0	+60.0 -60.0	+42.0 -42.0	+38.2 -38.2	+35.0 -35.0
	D	+65.3 -69.3	+65.3 -66.0	+65.0 -65.0	+65.0 -65.0	+65.0 -65.0	+65.0 -65.0	+65.0 -65.0	+48.0 -48.0	+43.6 -43.6	+40.0 -40.0

NOTES:

1. USE OF STANDARD 1 3/4" SILL LIMITS POSITIVE DESIGN PRESSURE TO +35.3 PSF FOR ALL SIZES AND CONFIGURATIONS. NEGATIVE PRESSURES ARE UNCHANGED.
2. INTERIOR SILL IS USED WHERE WATER RESISTANCE IS NOT REQUIRED, IN WHICH CASE POSITIVE DESIGN PRESSURE EQUALS THE NEGATIVE DESIGN PRESSURE SHOWN IN TABLE 1 FOR THE RESPECTIVE SIZE.

PRODUCT REVIEWED
as complying with the Florida
Building Code
Acceptance No. 04-1220.05
Expiration Date 05 12 10 08
By
Miami Dade Product Control
Division

Revsd By:	Date:	Revisions:	
F.K.	09/08/04	E	UPDATED, ADDED ANNEALED AND I.G. GLASS
F.K.	03/02/05	F	ADD LOCATION OF REINFORCEMENT DETAIL
F.K.	07/10/06	G	NO CHANGES THIS SHEET
Drawn By: F.K.	Date: 09/08/04	Checked By: J.J.	Date: 04/02/06

1070 TECHNOLOGY DRIVE
NOKOMIS, FL 34275

P.O. BOX 1529
NOKOMIS, FL 34274

PGT
Visibly Better

Description: DESIGN PRESSURES, NO REINFORCEMENT

Title: ALUM. SLIDING GLASS DOOR, NON-IMPACT

Series/Model:	Scale:	Sheet:	Drawing No.	Rev:
SGD2500	NTS	2 of 13	757	G

7/10/06

Robert L. Clark, P.E.
PE #39712
Structural

COMPARATIVE ANALYSIS: B. FTL-3116; 3/16" TEMPERED **TABLE 2.**

>EXTENDED SILL, 2 1/2" HIGH D. FTL-4341; 5/8" TEMPERED I.G. (3/16"T,1/4"SPACE,3/16"T)

>SINGLE/SINGLE INTERLOCK

>FULL REINFORCEMENT (SEE SECTIONS C-C AND D-D (SINGLE) DETAILS, SHEET 7 OF 13)

NOM. PANEL WIDTH		OVER-ALL UNIT HEIGHT									
		36" (3^0)	42" (3^6)	48" (4^0)	54" (4^6)	60" (5^0)	72" (6^0)	80" (6^8)	84" (7^0)	90" (7^6)	96" (8^0)
24" (2^0)	B,D	+65.3 -130.0	+65.3 -130.0	+65.3 -130.0	+65.3 -130.0	+65.3 -130.0	+65.3 -120.0	+65.3 -105.9	+65.3 -100.0	+65.3 -92.3	+65.3 -85.7
30" (2^6)	B,D	+65.3 -128.0	+65.3 -128.0	+65.3 -128.0	+65.3 -128.0	+65.3 -128.0	+65.3 -101.1	+65.3 -88.6	+65.3 -83.5	+65.3 -76.8	+65.3 -71.1
36" (3^0)	B,D	+65.3 -88.9	+65.3 -88.9	+65.3 -88.9	+65.3 -88.9	+65.3 -88.9	+65.3 -88.9	+65.3 -77.4	+65.3 -72.7	+65.3 -66.7	+61.5 -61.5
42" (3^6)	B,D	+65.3 -66.7	+65.3 -65.3	+65.3 -65.3	+65.3 -65.3	+65.3 -65.3	+65.3 -65.3	+65.3 -65.3	+65.3 -65.3	+59.6 -59.6	+54.9 -54.9
48" (4^0)	B,D	+53.3 -53.3	+50.8 -50.8	+50.0 -50.0	+50.0 -50.0	+50.0 -50.0	+50.0 -50.0	+50.0 -50.0	+50.0 -50.0	+50.0 -50.0	+50.0 -50.0

COMPARATIVE ANALYSIS: C. FTL-3102; 1/4" TEMPERED **TABLE 3.**

>EXTENDED SILL, 2 1/2" HIGH D. FTL-4273 & FTL-4275; 5/8" TEMPERED I.G. (3/16"T, 1/4"SPACE, 3/16"T)

>SINGLE/DOUBLE INTERLOCK (OUTSIDE)

>FULL REINFORCEMENT (SEE SECTIONS B-B, C-C AND D-D (DOUBLE) DETAILS, SHEET 7 OF 13)

NOM. PANEL WIDTH		OVER-ALL UNIT HEIGHT									
		36" (3^0)	42" (3^6)	48" (4^0)	54" (4^6)	60" (5^0)	72" (6^0)	80" (6^8)	84" (7^0)	90" (7^6)	96" (8^0)
24" (2^0)	C	+65.3 -130.0	+65.3 -130.0	+65.3 -130.0	+65.3 -130.0	+65.3 -130.0	+65.3 -130.0	+65.3 -127.1	+65.3 -120.0	+65.3 -110.8	+65.3 -102.9
	D	+65.3 -130.0	+65.3 -130.0	+65.3 -130.0	+65.3 -130.0	+65.3 -130.0	+65.3 -130.0	+65.3 -130.0	+65.3 -130.0	+65.3 -120.0	+65.3 -111.4
30" (2^6)	C	+65.3 -130.0	+65.3 -130.0	+65.3 -130.0	+65.3 -130.0	+65.3 -130.0	+65.3 -121.3	+65.3 -106.3	+65.3 -100.2	+65.3 -92.2	+65.3 -85.3
	D	+65.3 -130.0	+65.3 -130.0	+65.3 -130.0	+65.3 -130.0	+65.3 -130.0	+65.3 -130.0	+65.3 -115.2	+65.3 -108.5	+65.3 -99.8	+65.3 -92.4
36" (3^0)	C	+65.3 -106.7	+65.3 -106.7	+65.3 -106.7	+65.3 -106.7	+65.3 -106.7	+65.3 -106.7	+65.3 -92.9	+65.3 -87.3	+65.3 -80.0	+65.3 -73.8
	D	+65.3 -115.6	+65.3 -115.6	+65.3 -115.6	+65.3 -115.6	+65.3 -115.6	+65.3 -115.6	+65.3 -100.6	+65.3 -94.5	+65.3 -86.7	+65.3 -80.0
42" (3^6)	C	+65.3 -80.0	+65.3 -78.4	+65.3 -78.4	+65.3 -78.4	+65.3 -78.4	+65.3 -78.4	+65.3 -78.4	+65.3 -78.4	+65.3 -71.6	+65.3 -65.8
	D	+65.3 -86.7	+65.3 -84.9	+65.3 -84.9	+65.3 -84.9	+65.3 -84.9	+65.3 -84.9	+65.3 -84.9	+65.3 -84.9	+65.3 -77.5	+65.3 -71.3
48" (4^0)	C	+64.0 -64.0	+61.0 -61.0	+60.0 -60.0	+60.0 -60.0	+60.0 -60.0	+60.0 -60.0	+60.0 -60.0	+60.0 -60.0	+60.0 -60.0	+60.0 -60.0
	D	+65.3 -69.3	+65.3 -66.0	+65.0 -65.0	+65.0 -65.0	+65.0 -65.0	+65.0 -65.0	+65.0 -65.0	+65.0 -65.0	+65.0 -65.0	+65.0 -65.0

NOTES:
1. USE OF STANDARD 1 3/4" SILL LIMITS POSITIVE DESIGN PRESSURE TO +35.3 PSF FOR ALL SIZES AND CONFIGURATIONS. NEGATIVE PRESSURES ARE UNCHANGED.
2. INTERIOR SILL IS USED WHERE WATER RESISTANCE IS NOT REQUIRED, IN WHICH CASE POSITIVE DESIGN PRESSURE EQUALS THE NEGATIVE DESIGN PRESSURE SHOWN IN THE TABLES ABOVE FOR THE RESPECTIVE SIZE.

Revsd By:	Date:	Revisions:	
F.K.	09/08/04	E	UPDATED AND ADDED I.G. GLASS
F.K.	03/02/05	F	ADD LOCATION OF REINFORCEMENT DETAIL
F.K.	07/10/06	G	NO CHANGES THIS SHEET
Drawn By: F.K.	Date: 09/08/04	Checked By: J.J.	Date: 04/02/06

1070 TECHNOLOGY DRIVE
NOKOMIS, FL 34275

P.O. BOX 1529
NOKOMIS, FL 34274

PGT Visibly Better

Description: DESIGN PRESSURES, REINFORCED

Title: ALUM. SLIDING GLASS DOOR, NON-IMPACT

Series/Model:	Scale:	Sheet:	Drawing No.	Rev:
SGD2500	NTS	3 of 13	757	G

PRODUCT REVISED
as complying with the Florida Buiding Code
Acceptance No 04-1220.05
Expiration Date 05/22/08
By
Miami Dade Product Control Division

7/10/06
Robert L. Clark, P.E.
PE #39712
Structural

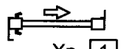

Xp [1]
1 PANEL 1 TRACK SINGLE POCKET

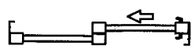

OX [2]
2 PANEL 2 TRACK BY-PASS

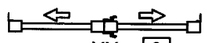

pXXp [3]
2 PANEL 1 TRACK DOUBLE POCKET

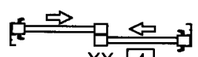

XX [4]
2 PANEL 2 TRACK BY-PASS

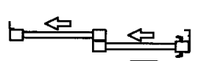

pXX [5]
2 PANEL 2 TRACK SINGLE POCKET

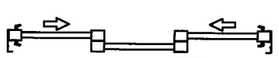

XOX [6]
3 PANEL 2 TRACK BY-PASS

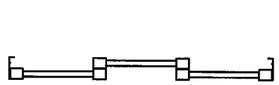

OOO [7]
3 PANEL 2 TRACK FIXED

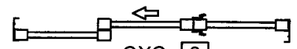

OXO [8]
3 PANEL 2 TRACK BY-PASS

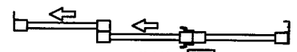

pXXO [9]
3 PANEL 2 TRACK SINGLE POCKET

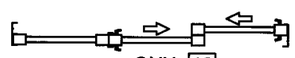

OXX [10]
3 PANEL 2 TRACK BY-PASS

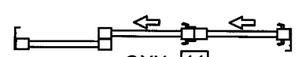

OXX [11]
3 PANEL 2 TRACK BY-PASS

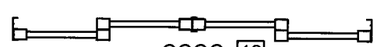

OOOO [12]
4 PANEL 2 TRACK FIXED

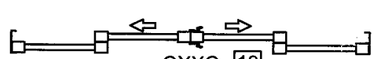

OXXO [13]
4 PANEL 2 TRACK BY-PASS

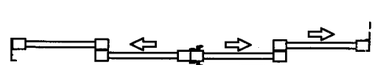

OXXXp [14]
4 PANEL 2 TRACK BY-PASS / SINGLE POCKET

INTERIOR
(ALL CONFIGURATIONS)
EXTERIOR

OVERALL WIDTH,
SEE TABLE ABOVE

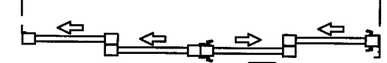

pXXXX [15]
4 PANEL 2 TRACK SINGLE POCKET / BY-PASS

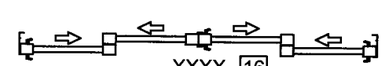

XXXX [16]
4 PANEL 2 TRACK BY-PASS

pXXXXp [17]
4 PANEL 2 TRACK DOUBLE POCKET

TABLE 5. OVERALL DOOR WIDTH

	CONFIGURATION	PANELS	TRACKS	DIM.
1	Xp OR pX	1	1	48 9/16
2	OX or XO BY-PASS	2	2	96 1/8
3	pXXp	2	1	96 1/16
4	XX BY-PASS	2	2	96 1/8
5	pXX or XXp	2	2	95 1/16
6	XOX BY-PASS	3	2	142 5/8
7	OOO	3	2	142 5/8
8	OXO BY-PASS	3	2	144 11/16
9	pXXO or OXXp	3	2	143 5/8
10	OXX or XXO BY-PASS	3	2	144 11/16
11	OXX or XXO BY-PASS	3	2	144 11/16
12	OOOO	4	2	191 3/16
13	OXXO BY-PASS	4	2	191 3/16
14	OXXXp or pXXXO	4	2	190 1/16
15	pXXXX or XXXXp BY-PASS	4	2	190 1/16
16	XXXX BY-PASS	4	2	191 3/16
17	pXXXXp	4	2	189

PRODUCT REVIEWED
as complying with the Florida
Building Code
Acceptance No 04-1220.05
Expiration Date 05/22/08
By
Miami-Dade Product Control
Division

7/10/06
Robert L. Clark, P.E.
PE #39712
Structural

Revsd By:	Date:	Revisions:	
F.K.	09/08/04	E	NEW SHEET
F.K.	03/02/05	F	REMOVE 4 TRACK CONFIGURATIONS
F.K.	07/10/06	G	REMOVE CONFIG. WITH MORE THAN 4 PANELS OR 3 TRACKS
Drawn By: F.K.	Date: 09/08/04	Checked By: J.J.	Date: 04/02/06

1070 TECHNOLOGY DRIVE
NOKOMIS, FL 34275

P.O. BOX 1529
NOKOMIS, FL 34274

PGT
Visibly Better

Description: EXAMPLE CONFIGURATION DIAGRAMS
Title: ALUM. SLIDING GLASS DOOR, NON-IMPACT

Series/Model:	Scale:	Sheet:	Drawing No.	Rev:
SGD2500	NTS	4 of 13	757	G

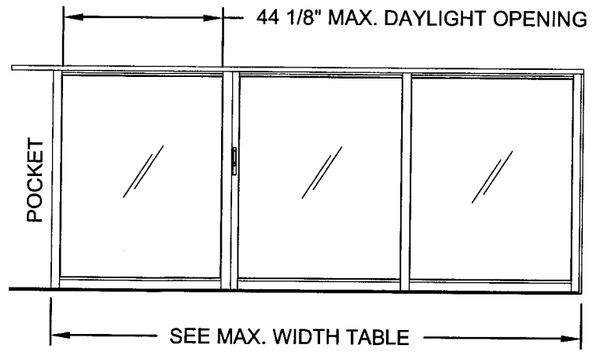

pXXO or OXXp (COUNTER TOP UNIT)

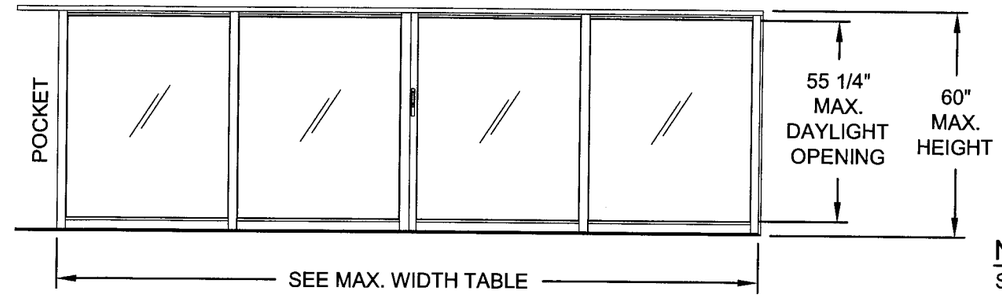

pXXXO or OXXXp (COUNTER TOP UNIT)

NOTE:
SEE MAXIMUM WIDTH TABLES FOR ALL AVAILABLE CONFIGURATIONS ON SHEET 4 OF 13.

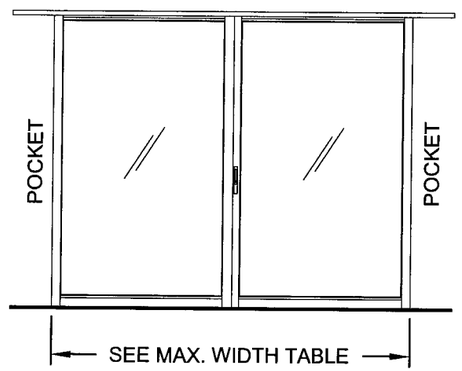

pXXp

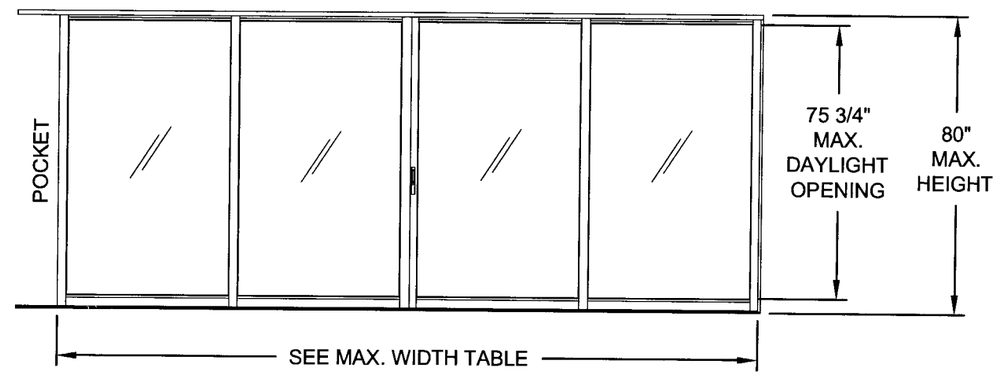

pXXXO or OXXXp

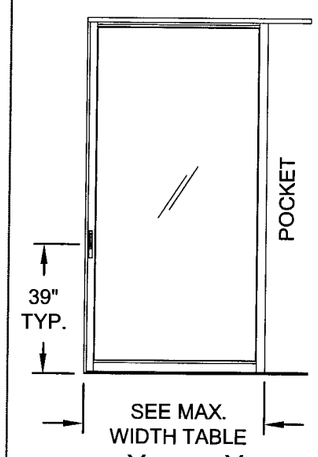

Xp or pX

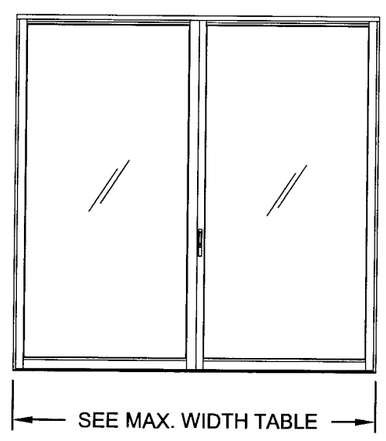

OX or XO

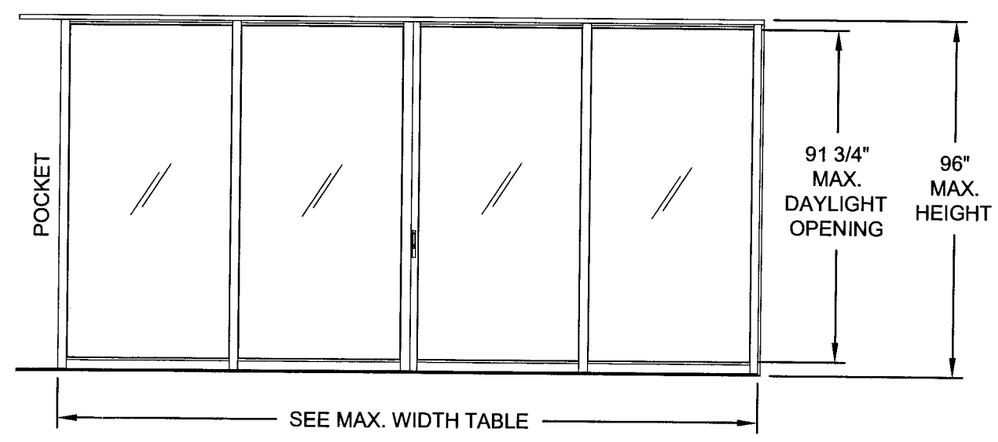

pXXXO or OXXXp

PRODUCT REVISED
as complying with the Florida Building Code
Acceptance No 04-1220.05
Expiration Date 05/22/08
By
Miami Dade Product Control Division

Revsd By:	Date:	Revisions:	
F.K.	09/08/04	E	REDRAW ELEVATIONS
F.K.	03/02/05	F	NO CHANGES THIS SHEET
F.K.	07/10/06	G	NO CHANGES THIS SHEET
Drawn By: F.K.	Date: 09/08/04	Checked By: J.J.	Date: 04/02/06

1070 TECHNOLOGY DRIVE
NOKOMIS, FL 34275

P.O. BOX 1529
NOKOMIS, FL 34274

PGT
Visibly Better

Description: EXAMPLE ELEVATIONS

Title: ALUM. SLIDING GLASS DOOR, NON-IMPACT

Series/Model:	Scale:	Sheet:	Drawing No.	Rev:
SGD2500	NTS	5 of 13	757	G

7/10/06
Robert L. Clark, P.E.
PE #39712
Structural

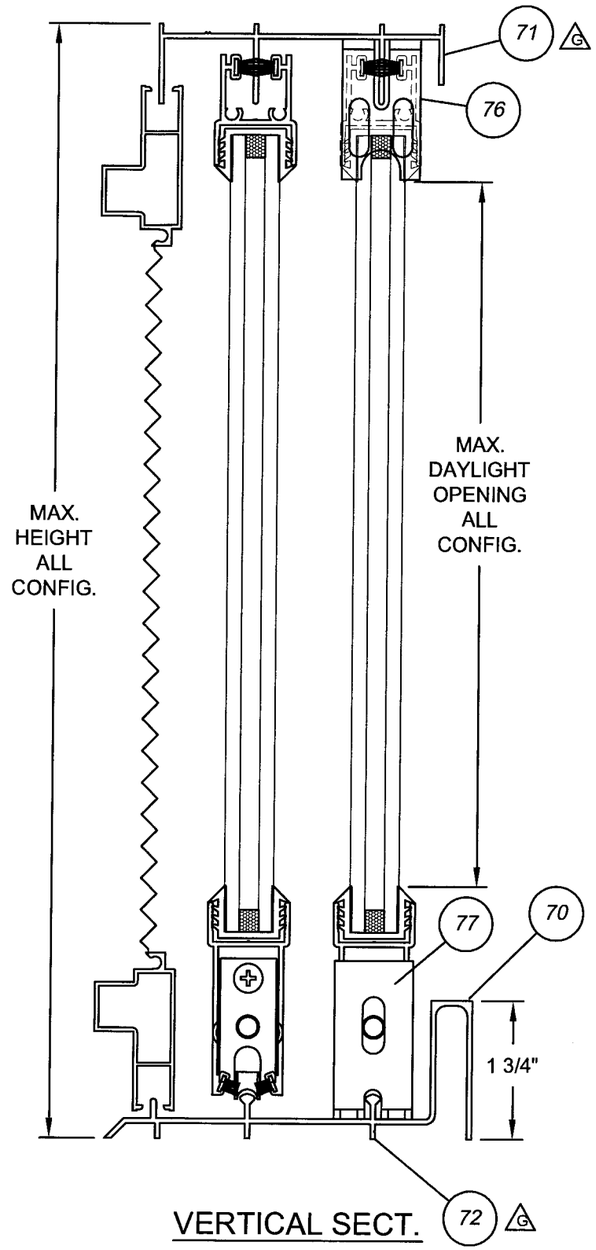

VERTICAL SECT.
STANDARD SILL

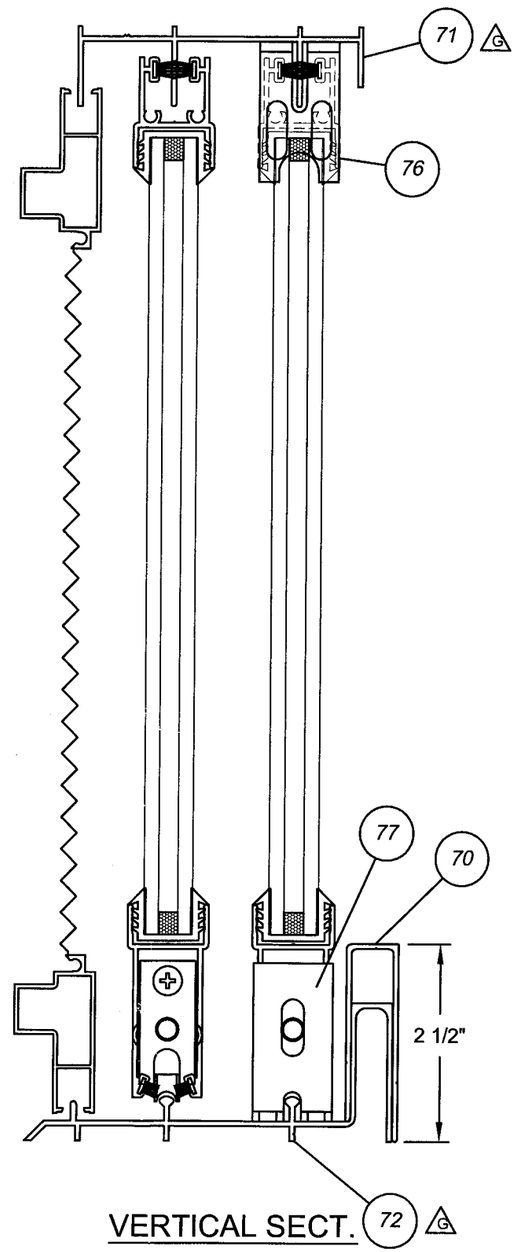

VERTICAL SECT.
EXTENDED SILL

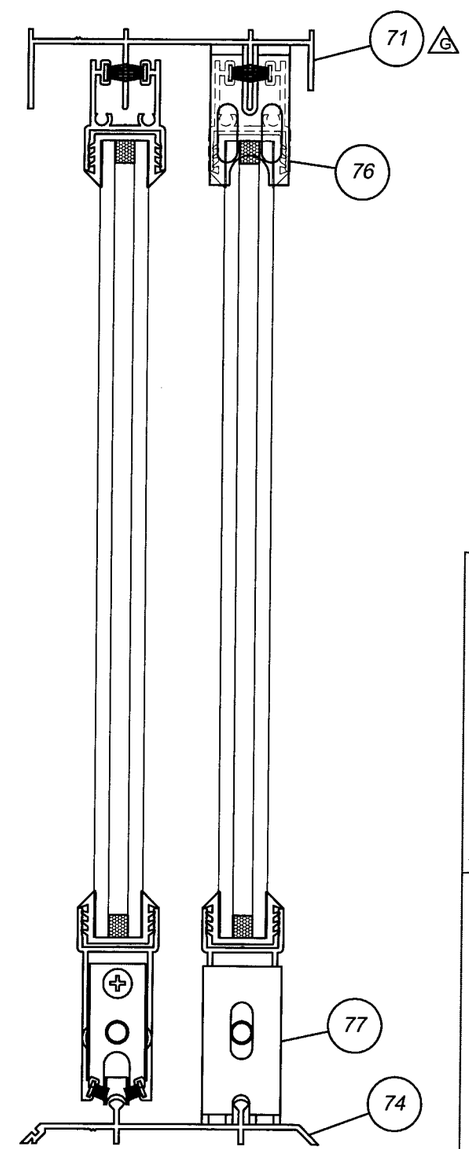

VERTICAL SECT.
INTERIOR SILL

PRODUCT REVISED
as complying with the Florida
Building Code
Acceptance No. 04-1220.05
Expiration Date 05/22/08
By
Miami Dade Product Control
Division

7/10/06
Robert L. Clark, P.E.
PE #39712
Structural

Revsd By:	Date:	Revisions:	
F.K.	09/08/04	E	REDRAWN
F.K.	03/02/05	F	REMOVE 3 TRACK FRAME ITEM NUMBERS
F.K.	07/10/06	G	SHOW I.G. AIR SPACER AND REMOVE 3-TRACK ITEM NOS.
Drawn By: F.K.	Date: 09/08/04	Checked By: J.J.	Date: 04/02/06

1070 TECHNOLOGY DRIVE
NOKOMIS, FL 34275

P.O. BOX 1529
NOKOMIS, FL 34274

PGT
Visibly Better

Description: VERTICAL SECTIONS

Title: ALUM. SLIDING GLASS DOOR, NON-IMPACT

Series/Model:	Scale:	Sheet:	Drawing No.	Rev:
SGD2500	1/2	6 of 13	757	G

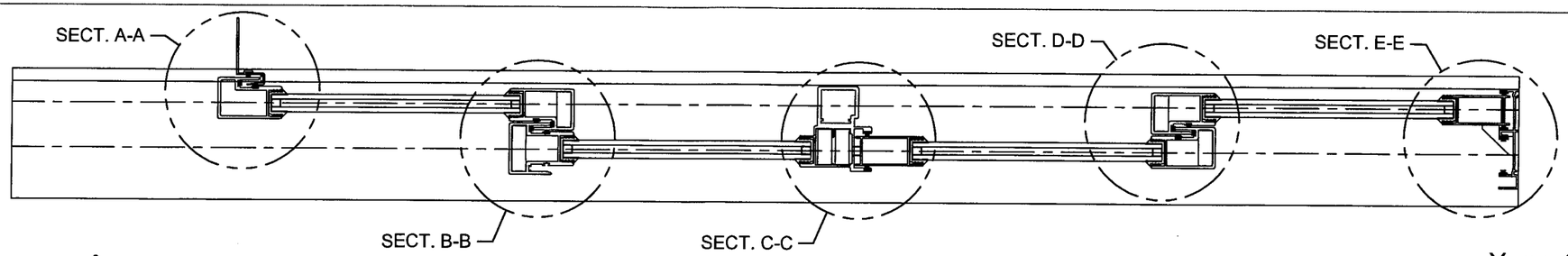

INTERIOR
(ALL SECTIONS)
EXTERIOR

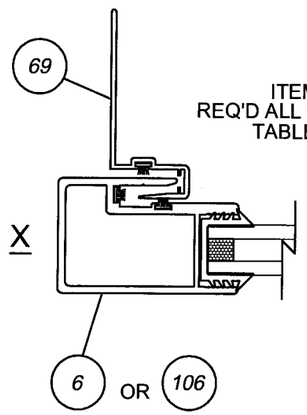

SECT. A-A
MOVABLE INTERLOCK
AT P-HOOK

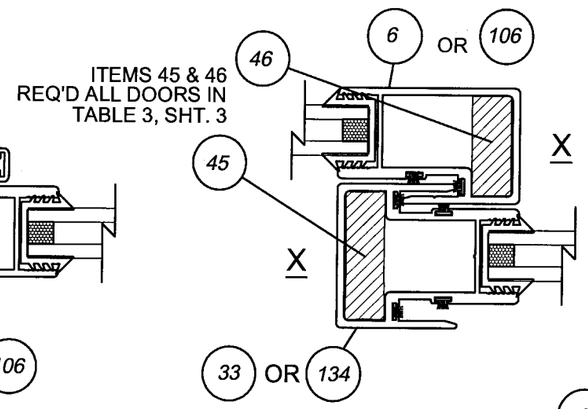

SECT. B-B
DOUBLE
INTERLOCK (XX)

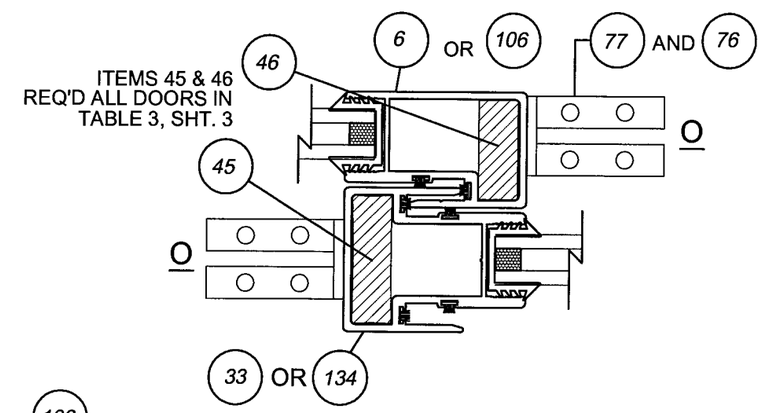

SECT. D-D IF DOUBLE INTERLOCK (OO)

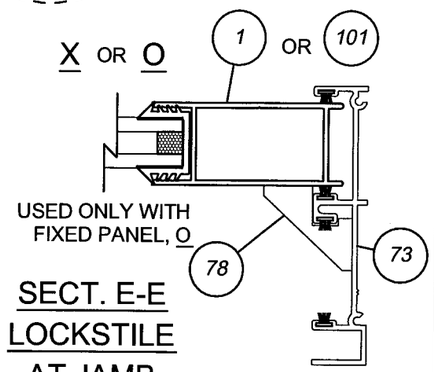

SECT. E-E
LOCKSTILE
AT JAMB

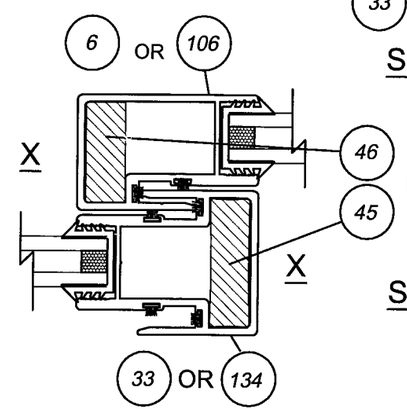

SECT. D-D IF DOUBLE INTERLOCK (XX)

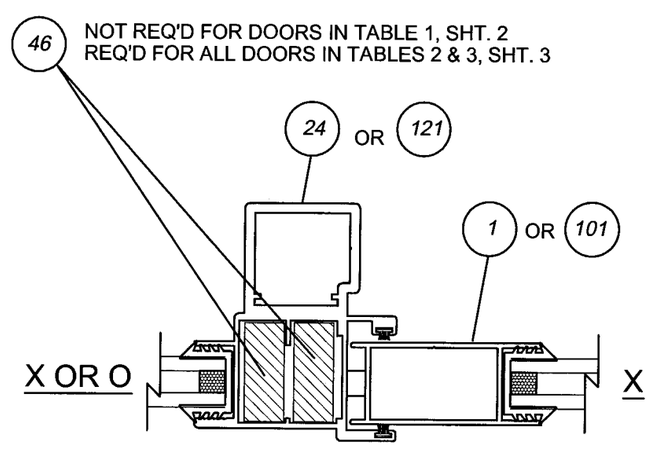

SECT. C-C LOCKSTILE AT ASTRAGAL

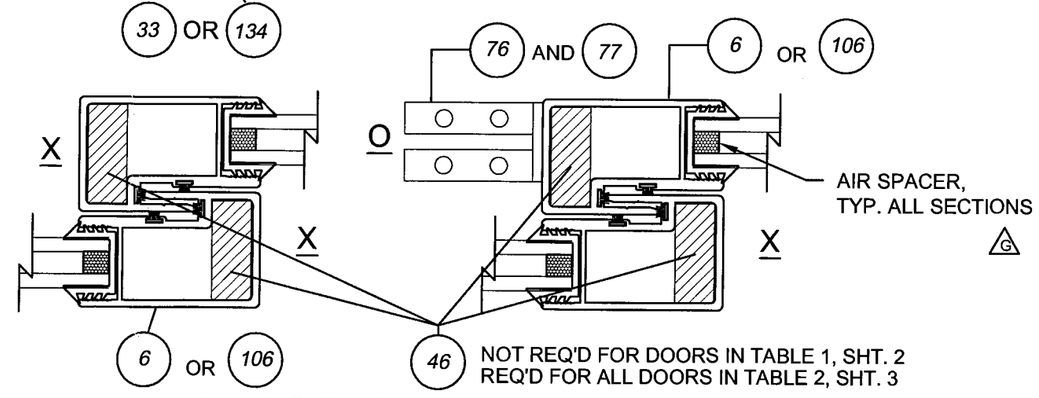

SECT. D-D SINGLE INTERLOCK (XX OR OX)

PRODUCT REVISED
as complying with the Florida
Buiding Code
Acceptance No. 04-1220.05
Expiration Date 05/22/08
By _____
Miami-Dade Product Control Division

7/10/06
Robert L. Clark, P.E.
PE #39712
Structural

Revsd By:	Date:	Revisions:	
F.K.	09/08/04	E	REDRAWN
F.K.	03/02/05	F	CLARIFY FIXED, ACTIVE PANEL AND REINFORCEMENT OPTIONS
F.K.	07/10/06	G	SHOW I.G. AIR SPACER IN ALL SECTIONS.
Drawn By: F.K.	Date: 09/08/04	Checked By: J.J.	Date: 04/02/06

1070 TECHNOLOGY DRIVE
NOKOMIS, FL 34275

P.O. BOX 1529
NOKOMIS, FL 34274

PGT
Visibly Better

Description: HORIZONTAL SECTIONS
Title: ALUM. SLIDING GLASS DOOR, NON-IMPACT

Series/Model:	Scale:	Sheet:	Drawing No.	Rev:
SGD2500	1/2	7 of 13	757	G

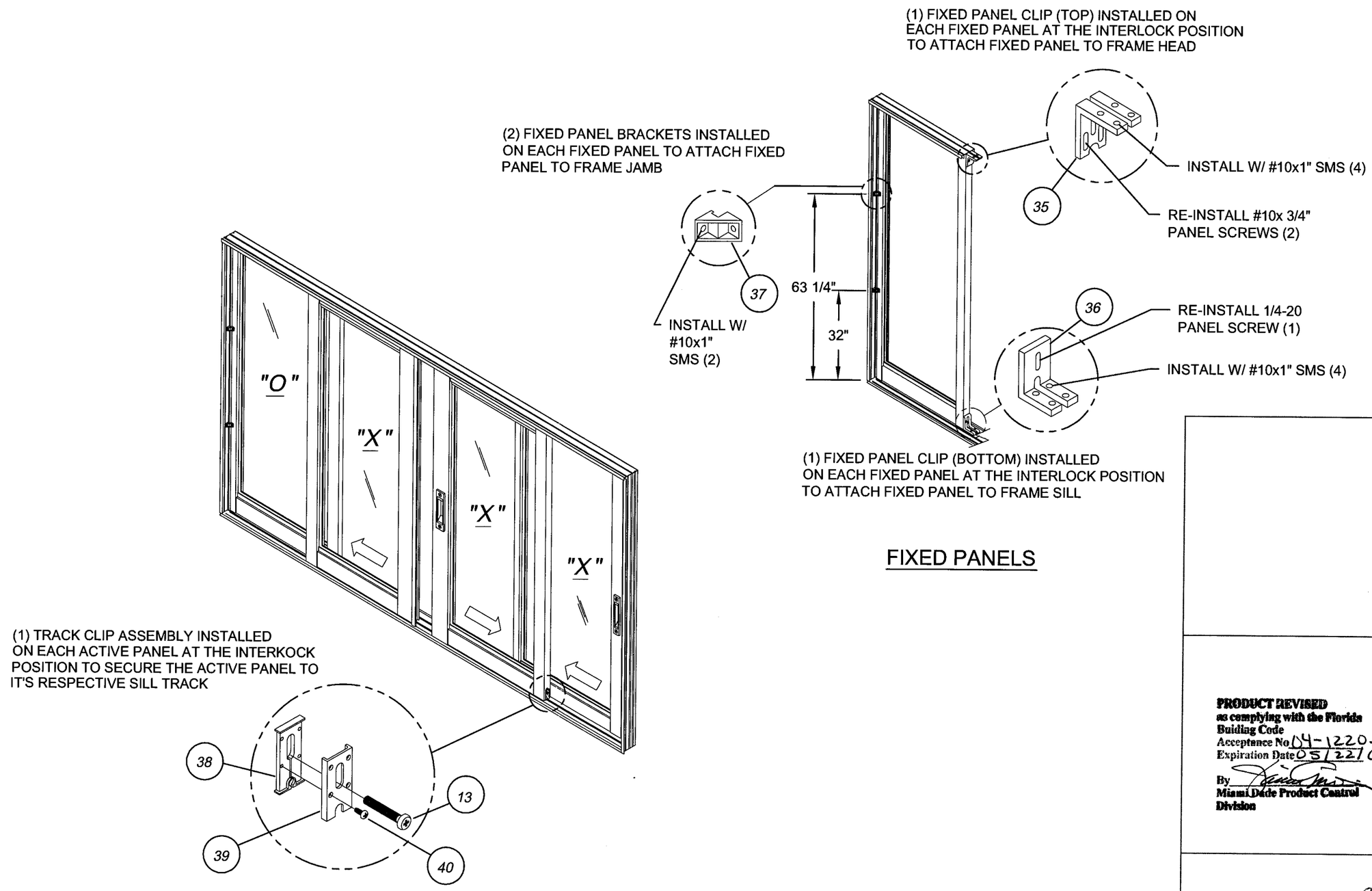

PRODUCT REVISED
as complying with the Florida Building Code
Acceptance No. 04-1220.05
Expiration Date 05/22/08
By _____
Miami Dade Product Control Division

7/10/06
Robert L. Clark, P.E.
PE #39712
Structural

Revsd By:	Date:	Revisions:	
F.K.	09/08/04	E	UPDATED FIXED CLIPS
F.K.	03/02/05	F	NO CHANGES THIS SHEET
F.K.	07/10/06	G	NO CHANGES THIS SHEET
Drawn By: F.K.	Date: 09/08/04	Checked By: J.J.	Date: 04/02/06

1070 TECHNOLOGY DRIVE
NOKOMIS, FL 34275

P.O. BOX 1529
NOKOMIS, FL 34274

PGT
Visibly Better

Description: TRACK CLIP & FIXED CLIPS INSTALLATION

Title: ALUM. SLIDING GLASS DOOR, NON-IMPACT

Series/Model:	Scale:	Sheet:	Drawing No.	Rev:
SGD2500	1/2	8 of 13	757	G

MONOLITHIC GLASS PANELS

ITEM	DWG #	FAB #	DESCRIPTION	PGT#
1	708	708-1	LOCKSTILE	69362
2			LATCH ASSEMBLY (LOCK)	7LOCK
3			LATCH ASSEMBLY (DUMMY)	7DUMY
4			#10-32 X 1.25 PH. FL. MS (LATCH)	71114K
6	705	705-1	INTERLOCK (STD.)	69409
7	1119		#10 X .750 PH. PN. SMS - S.S.	7S134X
8			1/4-20 X 1.125 PH. PN. MS	71420X118PPMSX
9	1209		WSTP, .187 X 320 - PILE	6FELTK
11	706	706-1	TOP RAIL	68172
12	1281		WSTP, .187 X .290 FIN SEAL	61281W
13	725B		TOP PANEL GUIDE	41801
15	707C	707A-1	BOTTOM RAIL	68173
16	1209		WSTP, .187 X 320 - PILE	6FELTK
17	726		BOTTOM PANEL GUIDE	41802
18	661		SINGLE ROLLER ASSY.	7SRAZ
19	661		SINGLE ROLLER ASSY. - S.S.	7SRAX
20	683		TANDEM ROLLER ASSY.	7683Z
21	683		TANDEM ROLLER ASSY. - S.S.	7683SS
23	609	609-1	ASTRAGAL	68315
24	720		ASTRAGAL (H.D.)	69492
25	1281		WSTP, .187 X .290 FIN SEAL	61281W
26	653		LATCH KEEPER	7SDKEEP
27	653		LATCH KEEPER - S.S.	7SDKEEPX
28			#8 X .312 PH. TR. SMS	78X56A
29	729		JAMB BUMPER	72087K
30			#6 X .375 PH. PN. SMS	76X38PPA
31	663/664		BUMPER SHIM (.030 OR .060)	41831
33	734	734-1	DOUBLE INTERLOCK (STD.)	69494
34	1209		WSTP, .187 X 320 - PILE	6FELTK
36	1007		GLAZING VINYL - 3/16	6T304
37			GLAZING VINYL - 1/4	614GLK
70			3/16" ANNEALED GLASS	
71			3/16" TEMPERED GLASS	
72			1/4" TEMPERED GLASS	

INSULATED GLASS PANELS

ITEM	DWG #	FAB #	DESCRIPTION	PGT#
101	736	736-1	LOCKSTILE	60392
2			LATCH ASSEMBLY (LOCK)	7LOCK
3			LATCH ASSEMBLY (DUMMY)	7DUMY
4			#10-32 X 1.25 PH. FL. MS (LATCH)	71114 (K,W)
106	735	735-1	INTERLOCK (STD.)	60393
7	1119		#10 X .750 PH. PN. SMS - S.S.	7S134X
8			1/4-20 X 1.125 PH. PN. MS	71420X118PPMSX
9	1209		WSTP, .187 X 320 - PILE	6FELTK
111	618	618-1	TOP RAIL	69088
12	1281		WSTP, .187 X .290 FIN SEAL	61281W
13	725B		TOP PANEL GUIDE	41801
115	619	619-1	BOTTOM RAIL	69089
16	1209		WSTP, .187 X 320 - PILE	6FELTK
17	726		BOTTOM PANEL GUIDE	41802
118	683		TANDEM ROLLER ASSY.	7683Z
119	683		TANDEM ROLLER ASSY. - S.S.	7683SS
121	737	737-1	ASTRAGAL	60394
25	1281		WSTP, .187 X .290 FIN SEAL	61281W
26	653		LATCH KEEPER	7SDKEEP
27	653		LATCH KEEPER - S.S.	7SDKEEPX
28			#8 X .312 PH. TR. SMS	78X56A
29	729		JAMB BUMPER	72087K
30			#6 X .375 PH. PN. SMS	76X38PPA
31	663/664		BUMPER SHIM (.030 OR .060)	41831
130			5/8" I.G. GLASS; 3/16" TEMPERED 1/4" SPACE, 3/16" TEMPERED	
131	1006		GLAZING VINYL - INSULATED GLASS	658GLK
34	1209		WSTP, .187 X 320 - PILE	6FELTK
134	745	745-1	DOUBLE INTERLOCK (STD.)	60551

COMMON ITEMS

ITEM	DWG #	FAB #	DESCRIPTION	PGT#
42	645		ADD-ON STILE (OXO ONLY)	69112
45	755		1/2 X 1 5/8 REINF. - ALUM	6755M
46	1214		1/2 X 1 1/4 REINF. - ALUM.	61214M
49	749		REINFORCEMENT SPRING CLIP	7BRKTM25
51	1040		MORTICE LOCK (DEAD LATCH)	71040
52	1040-2		MORTICE LOCK (DEAD LATCH) S.S.	71040X
53			CYLINDER/HOUSING ASSY. (MORTICE)	70288K
54	1016		#8 X .625 PH. FL. SMS	7858ZA
55	657		BACKING PLATE (MORTICE)	41830N
56	1045		MORTICE HANDLE SET	71045
57			COVER PLATE	7VT43
58	659		MORTICE LATCH KEEPER	7SDSP5X1
60	1239		3/16" APPLIED MUNTIN	68421
61	665		COLONIAL ENDPIECE	41628
62	522		COLONIAL INTERSECTION	41630

ITEM	DWG #	FAB #	DESCRIPTION	PGT#
63	124		APPLIED COLONIAL MUNTIN	66631
64	1240		1/16 X 1 FLATBAR	68926T52
66	754		TRACK CLIP GUIDE	41754B/W
67	756		TRACK CLIP COVER	6756B/W
68			#6 X 3/8 PP SMS (18-8 SS)	76X38PPAX
69	740		HOOKSTRIP (P-HOOK)	63713
70	722A		HIGH-RISE TRACK ADAPTER	69371
71	702		2-TRACK HEAD	68179
72	703B		2-TRACK EXTERIOR SILL	6703B
73	704		2-TRACK JAMB	68180
74	637		2-TRACK INTERIOR SILL	68275
76	717		FIXED PANEL CLIP, TOP	7LA13A
77	717B		FIXED PANEL CLIP, BOTTOM	7717FPCA
78	646		FIXED PANEL BRACKET	41814
90	1136		#6 X 1/2 PP SMS	76X12A

PRODUCT REVISED
as complying with the Florida Buiding Code
Acceptance No 04-1220.05
Expiration Date 05/22/08
By
Miami-Dade Product Control Division

Revsd By:	Date:	Revisions:	
F.K.	09/08/04	E	UPDATED
F.K.	03/02/05	F	ADD ITEM 90
F.K.	07/10/06	G	REMOVE ITEMS 79, 80 & 81 (3-TRACK FRAME)
Drawn By: F.K.	Date: 09/08/04	Checked By: J.J.	Date: 04/02/06

1070 TECHNOLOGY DRIVE
NOKOMIS, FL 34275

P.O. BOX 1529
NOKOMIS, FL 34274

PGT
Visibly Better

Description: PARTS LISTS

Title: ALUM. SLIDING GLASS DOOR, NON-IMPACT

Series/Model:	Scale:	Sheet:	Drawing No.	Rev:
SGD2500	NTS	9 of 13	757	G

7/10/06
Robert L. Clark, P.E.
PE #39712
Structural

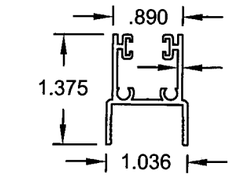

I.G. TOP RAIL
MAT'L: 6063-T5
#618
111

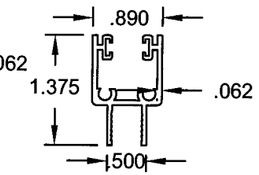

TOP RAIL
MAT'L: 6063-T5
#706
11

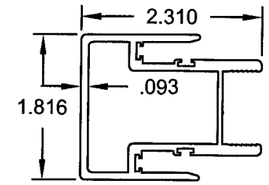

I.G. DOUBLE INTERLOCK
MATL:6063-T6
#745
134

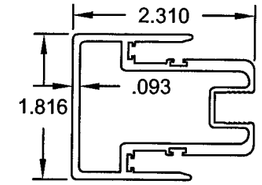

STD. DOUBLE INTERLOCK
MAT'L: 6063-T6
#734
33

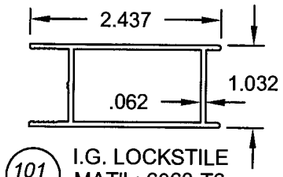

101 I.G. LOCKSTILE
MAT'L: 6063-T6
#736

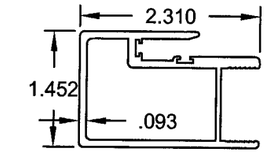

I.G. INTERLOCK
MATL: 6063-T6
#735
106

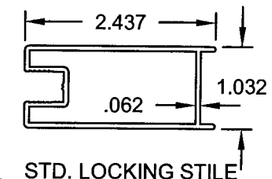

STD. LOCKING STILE
MAT'L: 6063-T6
#708
1

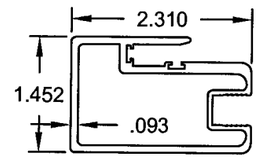

STD. INTERLOCK
MAT'L: 6063-T6
#705
6

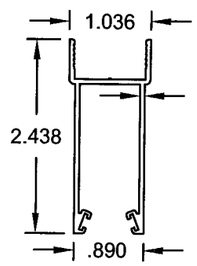

I.G. BOTTOM RAIL
MAT'L: 6063-T6
#619
115

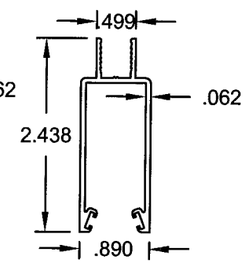

BOTTOM RAIL
MAT'L: 6063-T5
#707
15

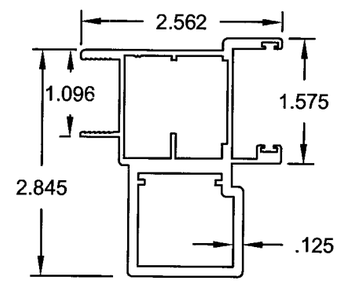

I.G. ASTRAGAL
MAT'L: 6063-T6
#737
121

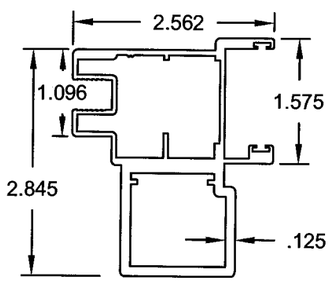

H.D. ASTRAGAL
MAT'L: 6063-T6
#720
23

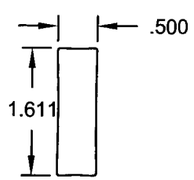

45 REINFORCEMENT
MAT'L: 6063-T6
#755

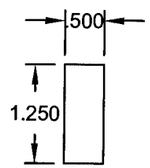

46 REINFORCEMENT
MAT'L: 6063-T6
#1214

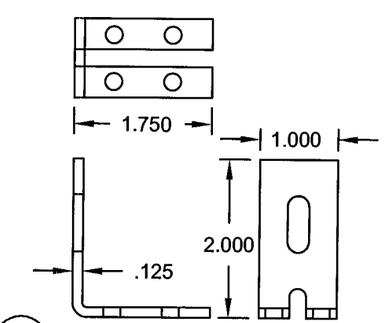

76 FIXED PANEL CLIP, BOTTOM
MAT'L: 6063-T6
#717B

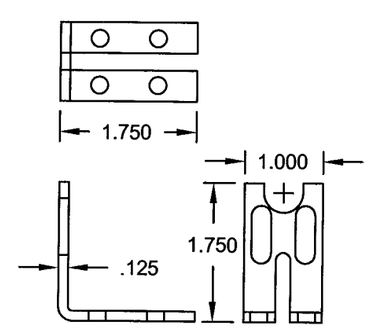

76 FIXED PANEL CLIP, TOP
MAT'L: 6063-T6
#717

PRODUCT REVISED
as complying with the Florida
Buiding Code
Acceptance No 04-1220.05
Expiration Date 05/22/08
By _____
Miami-Dade Product Control Division

7/10/06
Robert L. Clark, P.E.
PE #39712
Structural

Revsd By:	Date:	Revisions:	
F.K.	09/08/04	E	REDRAWN AND UPDATED
Revsd By: F.K.	Date: 03/02/05	Revisions: F	NO CHANGES THIS SHEET
Revsd By: F.K.	Date: 07/10/06	Revisions: G	NO CHANGES THIS SHEET
Drawn By: F.K.	Date: 09/08/04	Checked By: J.J.	Date: 04/02/06

1070 TECHNOLOGY DRIVE
NOKOMIS, FL 34275

P.O. BOX 1529
NOKOMIS, FL 34274

PGT
Visibly Better

Description: EXTRUSIONS, PANELS

Title: ALUM. SLIDING GLASS DOOR, NON-IMPACT

Series/Model:	Scale:	Sheet:	Drawing No.	Rev:
SGD2500	NTS	10 of 13	757	G

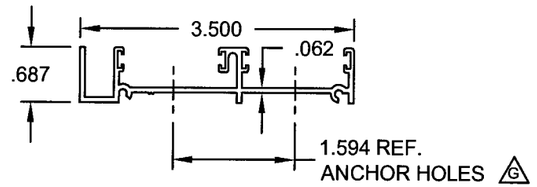

73 2 -TRACK JAMB
MAT'L: 6063-T6
#704

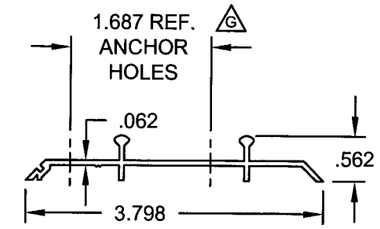

74 2 -TRACK INTERIOR SILL
MAT'L: 6063-T6
#637

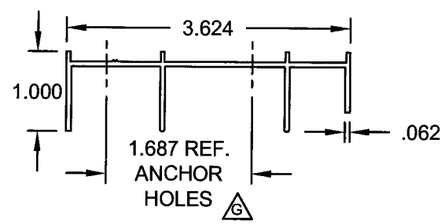

71 2 -TRACK HEAD
MAT'L: 6063-T6
#702

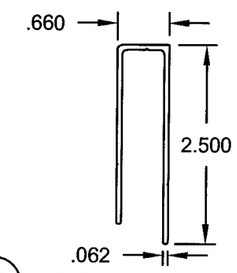

70 HI-RISE TRACK ADAPTER
MAT'L: 6063-T5
#722A

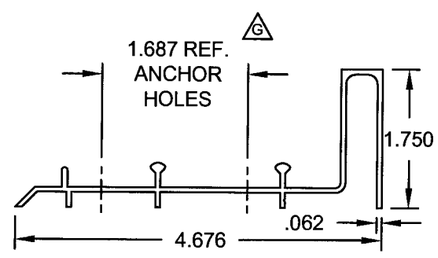

72 2 -TRACK EXTERIOR SILL
MAT'L: 6063-T6
#703B

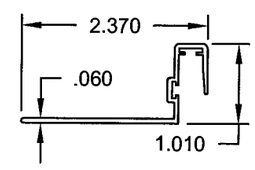

69 HOOKSTRIP
MAT'L: 6063-T5
#740

PRODUCT REVISED
as complying with the Florida
Building Code
Acceptance No. 04-1220.05
Expiration Date 05/22/08
By
Miami Dade Product Control
Division

Revsd By:	Date:	Revisions:	
F.K.	09/08/04	E	REDRAWN AND UPDATED
F.K.	03/02/05	F	UPGRADE ALLOY ITEMS 71, 72, 73 & 74
F.K.	07/10/06	G	REMOVE 3 TRACK EXTRUSIONS, ITEMS 79, 80 & 81. ADD ANCHOR HOLE REFERENCES.
Drawn By: F.K.	Date: 09/08/04	Checked By: J.J.	Date: 04/02/06

1070 TECHNOLOGY DRIVE
NOKOMIS, FL 34275

P.O. BOX 1529
NOKOMIS, FL 34274

PGT
Visibly Better

Description: EXTRUSIONS, FRAME

Title: ALUM. SLIDING GLASS DOOR, NON-IMPACT

Series/Model:	Scale:	Sheet:	Drawing No.	Rev:
SGD2500	NTS	11 of 13	757	G

7/10/06
Robert L. Clark, P.E.
PE #39712
Structural

ANCHOR QUANTITIES — TABLE 4.

GLASS TYPE >		A			B OR D			B OR D			C OR D			ALL GLASS TYPES					
INTERLOCK & > REINFORCEMENT		SSN			SSN			SSR			SDR			ALL INTERLOCK & REINFORCEMENTS CONFIGURATIONS					
ANCHOR TYPE & SUBSTRATE		HEAD & SILL CLUSTER			HEAD & SILL CLUSTER			HEAD & SILL CLUSTER			HEAD & SILL CLUSTER			JAMBS			P-HOOK		
NOM. PANEL WIDTH x	UNIT HT.	3,WOOD	1,2,WOOD	1,2,CONC	3,WOOD	1,2,WOOD	1,2,CONC	3,WOOD	1,2,WOOD	1,2,CONC	3,WOOD	1,2,WOOD	1,2,CONC	3,WOOD	1,2,WOOD	1,2,CONC	3,WOOD	1,2,WOOD	1,2,CONC
24.000 x	36.000	A4	A4	A4	A4	A4	A4	A4	A4	A4	A4	A4	A4	4	4	4	2	2	2
	48.000	A4	A4	A4	A4	A4	A4	A4	A4	A4	A4	A4	A4	6	6	6	3	3	3
	60.000	A4	A4	A4	B6	B6	A4	B6	B6	A4	B6	B6	A4	6	6	6	3	3	3
	72.000	NA			B6	B6	A4	B6	B6	A4	B6	B6	B6	8	8	8	4	4	4
	80.000				B6	B6	A4	B6	B6	A4	C8	B6	B6	8	8	8	4	4	4
	96.000				B6	A4	A4	B6	B6	A4	C8	B6	B6	8	8	8	4	4	4
30.000 x	36.000	A4	A4	A4	A4	A4	A4	A4	A4	A4	A4	A4	A4	4	4	4	2	2	2
	48.000	A4	A4	A4	B6	B6	A4	B6	B6	A4	B6	B6	A4	6	6	6	3	3	3
	60.000	A4	A4	A4	C8	B6	B6	B6	B6	B6	C8	B6	B6	6	6	6	3	3	3
	72.000	NA			B6	B6	A4	B6	B6	A4	C8	C8	B6	8	8	8	4	4	4
	80.000				B6	B6	A4	B6	B6	A4	C8	C8	B6	8	8	8	4	4	4
	96.000				B6	A4	A4	B6	B6	A4	C8	C8	B6	8	8	8	4	4	4
36.000 x	36.000	B6	B6	B6	B6	B6	B6	B6	B6	B6	B6	B6	B6	4	4	4	2	2	2
	48.000	B6	B6	B6	B6	B6	B6	B6	B6	B6	B6	B6	B6	6	6	6	3	3	3
	60.000	B6	B6	B6	C8	B6	B6	B6	B6	B6	C8	B6	B6	6	6	6	3	3	3
	72.000	NA			C8	B6	B6	B6	B6	B6	C8	C8	B6	8	8	8	4	4	4
	80.000				B6	B6	B6	B6	B6	B6	C8	C8	B6	8	8	8	4	4	4
	96.000				B6	B6	B6	B6	B6	B6	C8	C8	B6	8	8	8	4	4	4
42.000 x	36.000	B6	B6	B6	B6	B6	B6	B6	B6	B6	B6	B6	B6	4	4	4	2	2	2
	48.000	B6	B6	B6	B6	B6	B6	B6	B6	B6	B6	B6	B6	6	6	6	3	3	3
	60.000	B6	B6	B6	B6	B6	B6	B6	B6	B6	B6	B6	B6	6	6	6	3	3	3
	72.000	NA			C8	B6	B6	B6	B6	B6	C8	B6	B6	8	8	8	4	4	4
	80.000				C8	B6	B6	B6	B6	B6	C8	C8	B6	8	8	8	4	4	4
	96.000				B6	B6	B6	B6	B6	B6	C8	C8	B6	8	8	8	4	4	4
48.000 x	36.000	B6	B6	B6	B6	B6	B6	B6	B6	B6	B6	B6	B6	4	4	4	2	2	2
	48.000	B6	B6	B6	B6	B6	B6	B6	B6	B6	B6	B6	B6	6	6	6	3	3	3
	60.000	B6	B6	B6	B6	B6	B6	B6	B6	B6	B6	B6	B6	6	6	6	3	3	3
	72.000	NA			B6	B6	B6	B6	B6	B6	B6	B6	B6	8	8	8	4	4	4
	80.000				C8	B6	B6	B6	B6	B6	C8	B6	B6	8	8	8	4	4	4
	96.000				B6	B6	B6	B6	B6	B6	C8	C8	B6	8	8	8	4	4	4

NOTES:

1. ANCHOR TYPES:
   1 - 1/4" ELCO TAPCON 2 - 1/4" ELCO SS4 CRETE-FLEX 3 - #12 SCREW
2. GLASS TYPES:
   A - 3/16" ANNEALED B - 3/16" TEMPERED C - 1/4" TEMPERED D - 5/8" TEMPERED I.G.
3. INTERLOCK AND REINFORCEMENT KEY:
   SSN - SINGLE/SINGLE WITH NO REINFORCEMENT.
   SSR - SINGLE/SINGLE WITH FULL REINFORCEMENT.
   SDR - SINGLE/DOUBLE WITH FULL REINFORCEMENT.
4. ANCHOR QUANTITIES BASED ON THE FOLLOWING:
   (2) ANCHORS PER LOCATION AT HEAD, SILL AND JAMBS.
   (1) ANCHOR PER LOCATION AT P-HOOKS.

   JAMBS AND P-HOOKS SPACING - 6" MAX. FROM CORNERS AND 28" MAX. O.C.

   HEAD AND SILL SPACING - 6" MAX. FROM CORNERS AND 22 5/16" MAX. O.C.
5. IN MIAMI-DADE COUNTY INSTALL PER TABLE 4 AND NOTE 4.
   "NA" IN TABLE INDICATES NOT AVAILABLE.
6. OUTSIDE MIAMI-DADE COUNTY INSTALL PER NOTE 4.

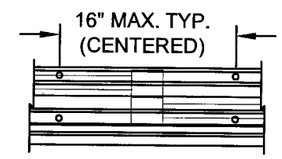

4 CLUSTER - A4

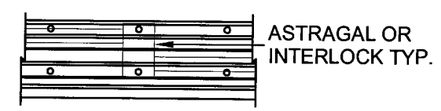

6 CLUSTER - B6

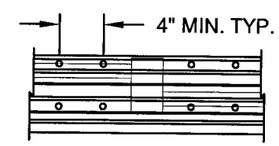

8 CLUSTER - C8

HEAD AND SILL ANCHOR CLUSTERS FOR ASTRAGALS AND INTERLOCKS

PRODUCT REVISED
as complying with the Florida Building Code
Acceptance No 04-1220.05
Expiration Date 05/22/08
By _____
Miami-Dade Product Control Division

7/10/06
Robert L. Clark, P.E.
PE #39712
Structural

Revsd By:	Date:	Revisions:	
F.K.	09/08/04	E	NEW ANCHORAGE SPACING SHEET
F.K.	03/02/05	F	REVISED AND SIMPLIFIED ANCHORAGE SPACING
F.K.	07/10/06	G	NO CHANGES THIS SHEET
Drawn By: F.K.	Date: 09/08/04	Checked By: J.J.	Date: 04/02/06

1070 TECHNOLOGY DRIVE
NOKOMIS, FL 34275

P.O. BOX 1529
NOKOMIS, FL 34274

PGT
Visibly Better

Description: ANCHORAGE SPACING

Title: ALUM. SLIDING GLASS DOOR, NON-IMPACT

Series/Model:	Scale:	Sheet:	Drawing No.	Rev:
SGD2500	NTS	12 of 13	757	G

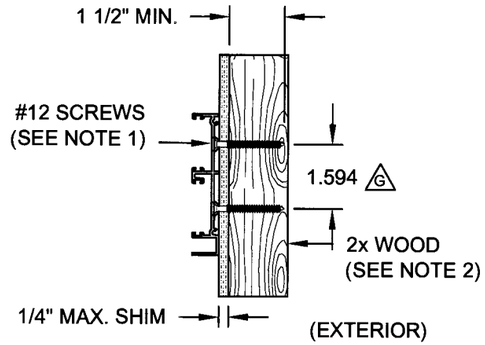

DETAIL - F

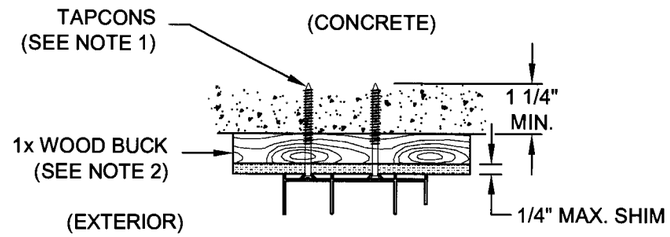

DETAIL - C

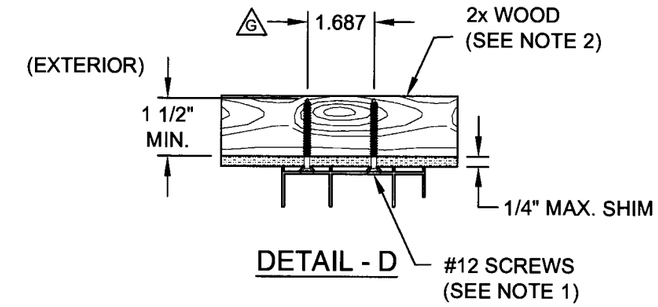

DETAIL - D

TYPICAL FRAME HEAD INSTALLATIONS

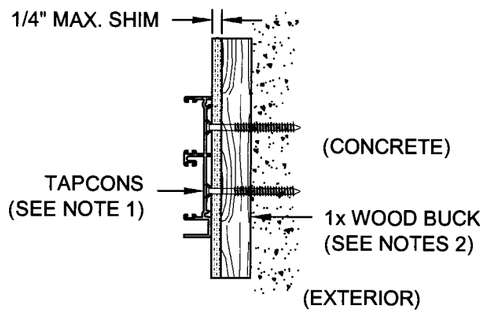

DETAIL - E

NOTES:

1. FOR CONCRETE APPLICATIONS IN MIAMI-DADE COUNTY, USE ONLY MIAMI-DADE COUNTY APPROVED ELCO TAPCONS. FOR WOOD APPLICATIONS 1/4" SS4 CRETE-FLEX OR 1/4" TAPCONS ARE APPROVED FOR USE IN PLACE OF SCREWS.
2. WOOD BUCKS DEPICTED IN THE SECTIONS ON THIS PAGE AS 1x ARE BUCKS WHOSE TOTAL THICKNESS IS LESS THAN 1 1/2". WOOD BUCKS DEPICTED AS 2x ARE 1 1/2" THICK OR GREATER. INSTALLATION TO THE SUBSTRATE OF WOOD BUCKS TO BE ENGINEERED BY OTHERS OR AS APPROVED BY AUTHORITY HAVING JURISDICTION.
3. FOR ATTACHMENT TO ALUMINUM: THE MATERIAL SHALL BE A MINIMUM STRENGTH OF 6063-T5 AND A MINIMUM OF 1/8" THICK. THE ALUMINUM STRUCTURAL MEMBER SHALL BE OF A SIZE TO PROVIDE FULL SUPPORT TO THE DOOR FRAME SIMILAR TO THAT SHOWN IN DETAILS B, D AND F ABOVE FOR 2x WOOD BUCKS. THE ANCHOR SHALL BE A #12 SHEET METAL SCREW WITH FULL ENGAGEMENT INTO THE ALUMINUM. IF THESE CRITERIA ARE MET THE PRESSURES AND ANCHORAGE SPACING FOR #12 SCREWS SHOWN ON SHEET 12 MAY BE USED.
4. IF SILL IS LEVEL AND TIGHT TO CONCRETE SLAB, GROUT IS NOT REQUIRED. IF USED, GROUT MUST TRANSFER SHEAR LOAD TO SLAB.
5. IF SILL IS NOT LEVEL AND TIGHT TO WOOD BUCK, AND IF GROUT IS USED, GROUT MUST TRANSFER SHEAR LOAD TO BUCK.

TYPICAL FRAME JAMB INSTALLATIONS

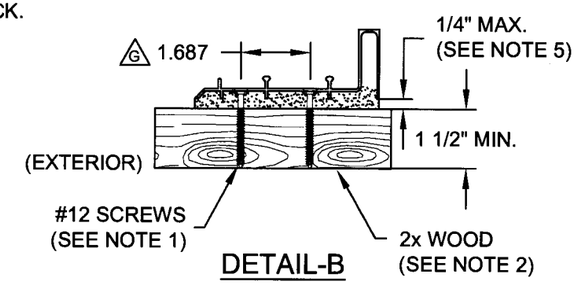

DETAIL-B

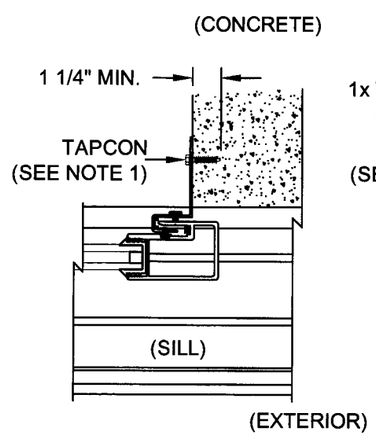

DETAIL - G

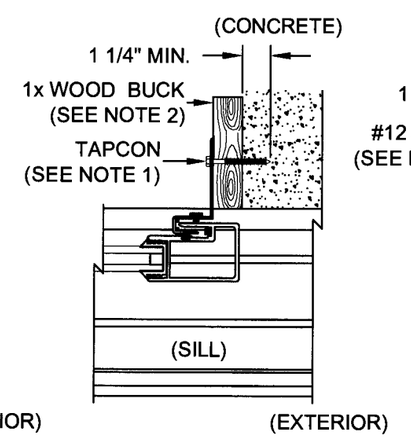

DETAIL - H

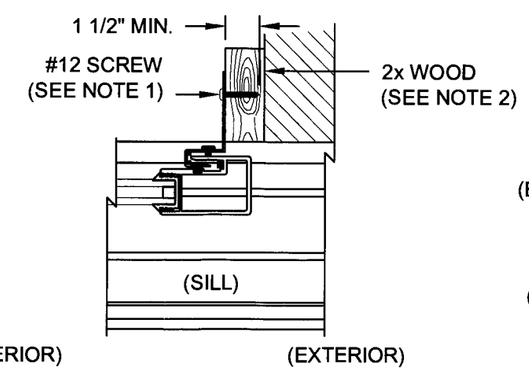

DETAIL - I

TYPICAL POCKET P-HOOK INSTALLATIONS

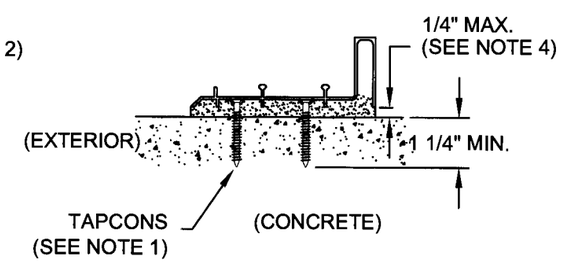

DETAIL-A

TYPICAL FRAME SILL INSTALLATIONS

Revsd By:	Date:	Revisions:	
F.K.	09/08/04	E	REDRAWN AND UPDATED
F.K.	03/02/05	F	REVISED AND UPDATED NOTES. ADDED DETAIL DESIGNATIONS
F.K.	07/10/06	G	SHOW ANCHOR CENTERLINES IN HEAD, SILL AND JAMB DETAILS.
Drawn By: F.K.	Date: 09/08/04	Checked By: J.J.	Date: 04/02/06

1070 TECHNOLOGY DRIVE
NOKOMIS, FL 34275

P.O. BOX 1529
NOKOMIS, FL 34274

PGT
Visibly Better

Description: ANCHORAGE DETAILS

Title: ALUM. SLIDING GLASS DOOR, NON-IMPACT

Series/Model:	Scale:	Sheet:	Drawing No.	Rev:
SGD2500	1/4	13 of 13	757	G

PRODUCT REVISED
as complying with the Florida Buiding Code
Acceptance No 04-1220.05
Expiration Date 05/22/08
By
Miami Dade Product Control Division

7/10/06

Robert L. Clark, P.E.
PE #39712
Structural