MIAMI-DADE COUNTY
BUILDING CODE COMPLIANCE OFFICE (BCCO)
PRODUCT CONTROL DIVISION

MIAMI-DADE COUNTY, FLORIDA
METRO-DADE FLAGLER BUILDING
140 WEST FLAGLER STREET, SUITE 1603
MIAMI, FLORIDA 33130-1563
(305) 375-2901 FAX (305) 375-2908

# NOTICE OF ACCEPTANCE (NOA)

**Jeld-Wen Window Division**
**201 Evans Road**
**Rantoul, IL 61866**

**SCOPE:**
This NOA is being issued under the applicable rules and regulations governing the use of construction materials. The documentation submitted has been reviewed by Miami-Dade County Product Control Division and accepted by the Board of Rules and Appeals (BORA) to be used in Miami Dade County and other areas where allowed by the Authority Having Jurisdiction (AHJ).

This NOA shall not be valid after the expiration date stated below. The Miami-Dade County Product Control Division (In Miami Dade County) and/or the AHJ (in areas other than Miami Dade County) reserve the right to have this product or material tested for quality assurance purposes. If this product or material fails to perform in the accepted manner, the manufacturer will incur the expense of such testing and the AHJ may immediately revoke, modify, or suspend the use of such product or material within their jurisdiction. BORA reserves the right to revoke this acceptance, if it is determined by Miami-Dade County Product Control Division that this product or material fails to meet the requirements of the applicable building code.

This product is approved as described herein, and has been designed to comply with the Florida Building Code, including the High Velocity Hurricane Zone.

**DESCRIPTION: Tradition Plus Aluminum Clad Wood Radius Window**

**APPROVAL DOCUMENT:** Drawing No.**W04-57**, titled "Tradition Plus Alum Clad Wood Radius WDW.", sheets 1 through 4 of 4, prepared by AL-Farooq, dated 06/19/04, signed and sealed by Humayoun Farooq, P.E., bearing the Miami-Dade County Product Control Approval stamp with the Notice of Acceptance number and approval date by the Miami-Dade County Product Control Division.

**MISSILE IMPACT RATING: Large and Small Missile Impact**

**LABELING:** Each unit shall bear a permanent label with the manufacturer's name or logo, city, state and following statement: "Miami-Dade County Product Control Approved", unless otherwise noted herein.

**RENEWAL** of this NOA shall be considered after a renewal application has been filed and there has been no change in the applicable building code negatively affecting the performance of this product.

**TERMINATION** of this NOA will occur after the expiration date or if there has been a revision or change in the materials, use, and/or manufacture of the product or process. Misuse of this NOA as an endorsement of any product, for sales, advertising or any other purposes shall automatically terminate this NOA. Failure to comply with any section of this NOA shall be cause for termination and removal of NOA.

**ADVERTISEMENT:** The NOA number preceded by the words Miami-Dade County, Florida, and followed by the expiration date may be displayed in advertising literature. If any portion of the NOA is displayed, then it shall be done in its entirety.

**INSPECTION:** A copy of this entire NOA shall be provided to the user by the manufacturer or its distributors and shall be available for inspection at the job site at the request of the Building Official.
This NOA consists of this page 1 and evidence page E-1, as well as approval document mentioned above.
The submitted documentation was reviewed by **Herminio F. Gonzalez, P.E., Director, BCCO**

PRODUCT CONTROL ACCEPTED
2/23/05

**Jeld-Wen Window Division**

## NOTICE OF ACCEPTANCE: EVIDENCE SUBMITTED

**A. DRAWINGS**

1. Manufacturer's die drawings and sections.
2. Drawing No.**W04-57**, titled "Tradition Plus Alum Clad Wood Radius WDW.", sheets 1 through 4 of 4, prepared by AL-Farooq Corporation, dated 06/19/04, signed and sealed by Humayoun Farooq, P.E.

**B. TESTS**

1. Test reports on 1) Air Infiltration Test, per FBC, TAS 202-94
   2) Uniform Static Air Pressure Test, Loading per FBC, TAS 202-94
   3) Water Resistance Test, per FBC, TAS 202-94
   4) Large Missile Impact Test per FBC, TAS 201-94
   5) Cyclic Wind Pressure Loading per FBC, TAS 203-94

   along with marked-up drawings and installation diagram of aluminum clad wood window, prepared by Stork Material Technology, Test Report No. **STC-03-0303.09**, dated 03/08/04 signed and sealed by John D. Lee, P.E.

**C. CALCULATIONS**

1. Anchor Calculations, ASTM-E1300, and structural analysis, dated 06/25/04, prepared by AL-Farooq Corporation, signed and sealed by Humayoun Farooq, P.E.

**D. QUALITY ASSURANCE**

1. Miami Dade Building Code Compliance Office (BCCO).

**E. MATERIAL CERTIFICATIONS**

1. Notice of Acceptance No. **03-0417.01** issued to Cardinal LG. for their "Laminated Glass Cardinal Sea Storm Type B" dated 05/15/03, expiring on 12/30/07.

**F. STATEMENTS**

1. Statement letter of conformance and no financial interest, dated June 24, 2004, signed and sealed by Humayoun Farooq, P.E.

**G. OTHER**

1. Letter from the consultant stating that the product is in compliance with the Florida Building Code (FBC).

for M Thaik

**Hermino F. Gonzalez, P.E.**
**Director, Building Code Compliance Office**
**NOA No 05-0103.04**
**Expiration Date: March 17, 2010**
**Approval Date: March 17, 2005**

| DESIGN LOAD CAPACITY - PSF | | | |
|---|---|---|---|
| WINDOW DIMENSIONS | | 1/2" LAM. ANN. GLASS | |
| WIDTH | HEIGHT | EXT. (+) | INT. (-) |
| 24" | 60" | 65.0 | 75.0 |
| 30" | | 65.0 | 75.0 |
| 36" | | 65.0 | 75.0 |
| 42" | | 65.0 | 75.0 |
| 48" | | 65.0 | 75.0 |
| 54" | | 65.0 | 75.0 |
| 60" | | 65.0 | 75.0 |
| 24" | 72" | 65.0 | 75.0 |
| 30" | | 65.0 | 75.0 |
| 36" | | 65.0 | 75.0 |
| 42" | | 65.0 | 75.0 |
| 48" | | 65.0 | 75.0 |
| 54" | | 65.0 | 71.8 |
| 60" | | 63.9 | 63.9 |
| 24" | 84" | 65.0 | 75.0 |
| 30" | | 65.0 | 75.0 |
| 36" | | 65.0 | 75.0 |
| 42" | | 65.0 | 75.0 |
| 48" | | 65.0 | 71.9 |
| 54" | | 61.6 | 61.6 |
| 60" | | 54.8 | 54.8 |
| 24" | 96" | 65.0 | 75.0 |
| 30" | | 65.0 | 75.0 |
| 36" | | 65.0 | 75.0 |
| 42" | | 65.0 | 75.0 |
| 48" | | 64.0 | 64.0 |
| 54" | | 53.9 | 53.9 |
| 60" | | 47.5 | 47.5 |
| 24" | 108" | 65.0 | 75.0 |
| 30" | | 65.0 | 75.0 |
| 36" | | 65.0 | 75.0 |
| 42" | | 65.0 | 75.0 |
| 48" | | 58.4 | 58.4 |
| 24" | 120" | 65.0 | 75.0 |
| 30" | | 65.0 | 75.0 |
| 36" | | 65.0 | 75.0 |
| 42" | | 65.0 | 72.3 |
| 48" | | 54.5 | 54.5 |

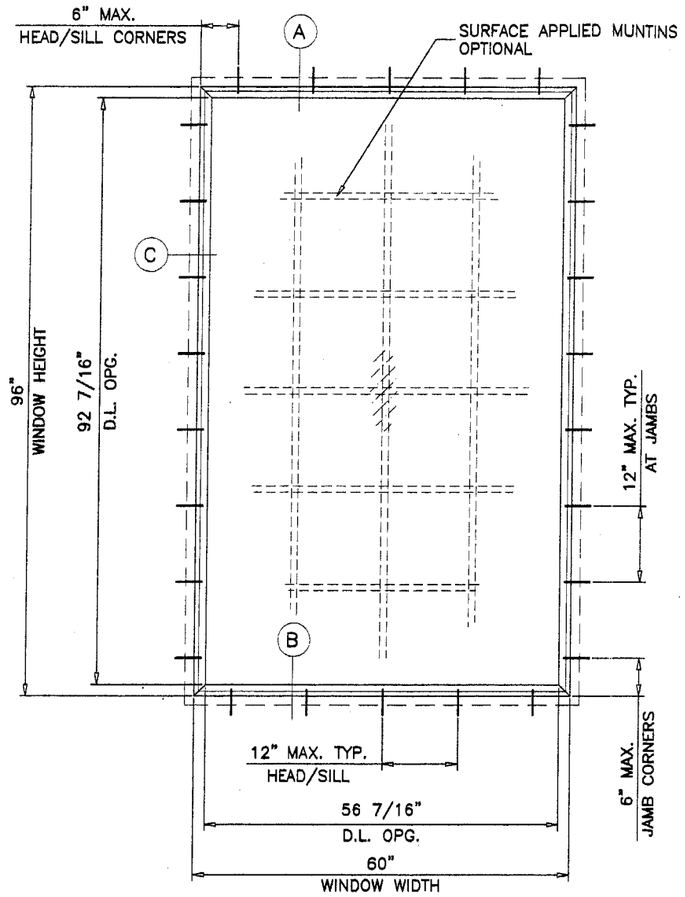


TYPICAL ELEVATION
TESTED UNIT

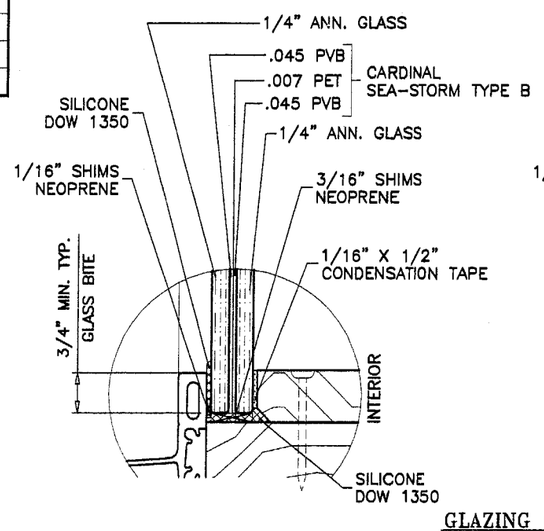


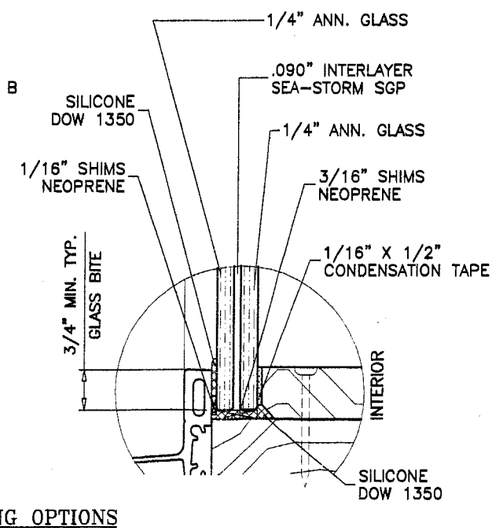


GLAZING OPTIONS

## TRADITION PLUS ALUM CLAD WOOD RADIUS WINDOW

WINDOWS GLAZED WITH LAMINATED GLASS RATED FOR LARGE MISSILE IMPACT AND REQUIRE NO SHUTTERS.

DESIGN LOAD RATING FOR WINDOWS TO BE AS PER CHARTS SHOWN ABOVE.

APPROVAL APPLIES TO SINGLE WINDOWS ALSO SIDE BY SIDE COMBINATIONS OF FIXED/FIXED OR FIXED WITH OTHER WINDOW TYPES IN MODULES OF TWO OR MORE WINDOWS USING MIAMI-DADE COUNTY APPROVED MULLIONS.

THIS PRODUCT HAS BEEN DESIGNED AND TESTED TO COMPLY WITH THE REQUIREMENTS OF THE FLORIDA BUILDING CODE INCLUDING HIGH VELOCITY HURRICANE ZONE.

WOOD BUCKS BY OTHERS, MUST BE ANCHORED PROPERLY TO TRANSFER LOADS TO THE STRUCTURE.

ANCHORS SHALL BE AS LISTED, SPACED AS SHOWN ON DETAILS. ANCHOR EMBEDMENT TO BASE MATERIAL SHALL BE BEYOND WALL DRESSING OR STUCCO.

ANCHORING OR LOADING CONDITIONS NOT SHOWN IN THESE DETAILS ARE NOT PART OF THIS APPROVAL.

A 33% INCREASE IN ALLOWABLE STRESS WAS USED IN DESIGN OF ANCHORS.

Approved as complying with the Florida Building Code
Date 03/17/05
NOA# 05-0103.04
Miami-Dade Product Control Division
By M Khalil

Engr: DR. HUMAYOUN FAROOQ
STRUCTURES
FLA. PE # 16557
C.A.N. 3538
DEC 22 2004


AL-FAROOQ CORPORATION
ENGINEERS, PLANNERS & PRODUCT DESIGN
1235 SW 87 AVE
MIAMI, FLORIDA 33174
TEL. (305) 264-8100 FAX. (305) 262-6978


COMP-ANL\W04-57JW

TRADITION PLUS ALUM CLAD WOOD RADIUS WDW.


JELD WEN WINDOW DIVISION
201 EVANS ROAD
RANTOUL, ILLINOIS 61866
TEL. (217) 893-4444 FAX (217) 893-7650


| revisions: | | | |
|---|---|---|---|
| no | date | by | description |

date: 06-19-04
scale: 1/2"=1'-0"
dr. by: HAMID
chk. by:

drawing no. W04-57

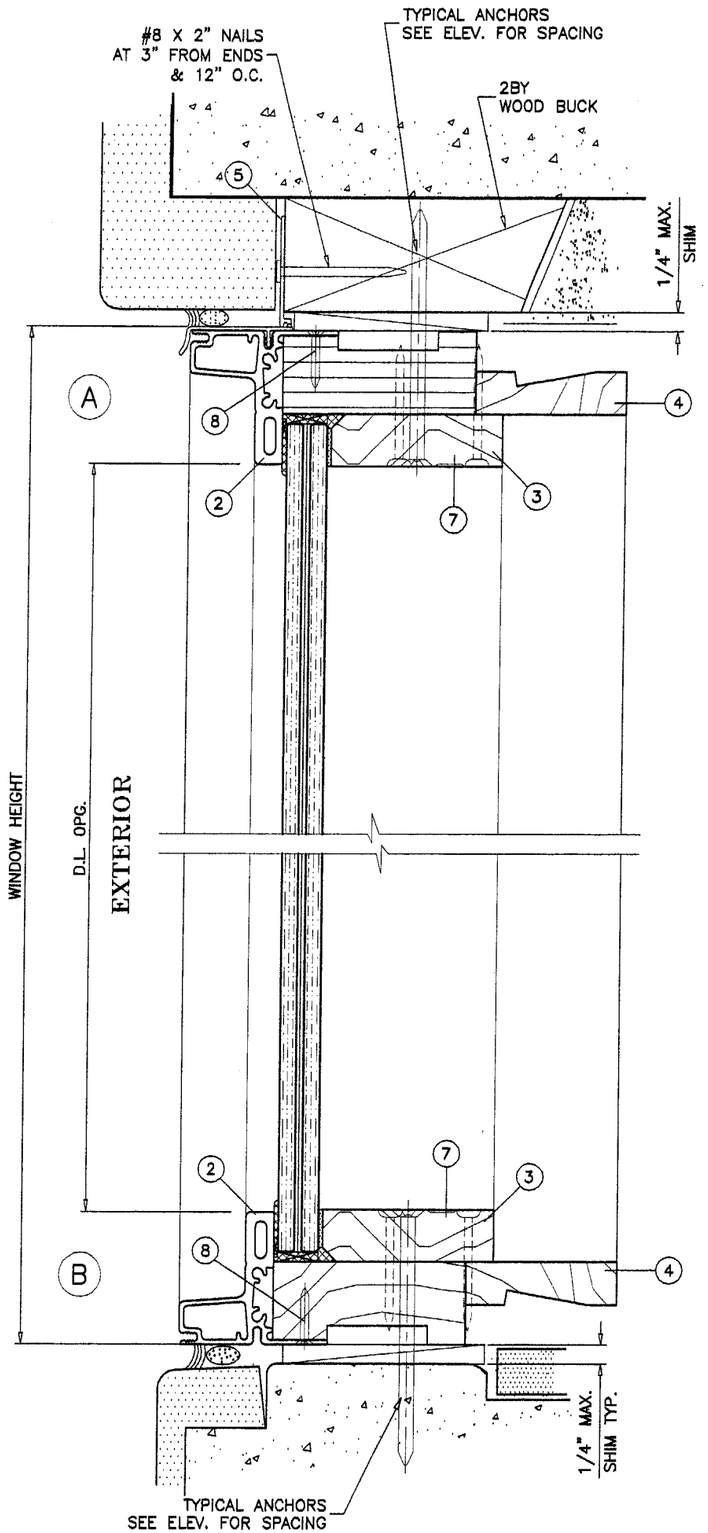


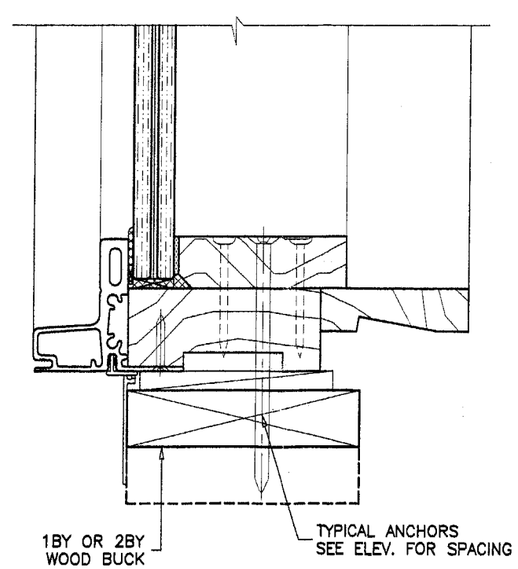


WOOD BUCKS NOT BY JELD-WEN, MUST SUSTAIN LOADS IMPOSED BY GLAZING SYSTEM AND TRANSFER THEM TO THE BUILDING STRUCTURE.

**TYPICAL ANCHORS:** SEE ELEV. FOR SPACING

**1/4" TAPCONS**

INTO 2BY WOOD BUCKS OR WOOD STRUCTURE
1-3/8" MIN. PENETRATION INTO WOOD

THRU 1BY WOOD BUCKS INTO MASONRY OR CONC.
1-1/4" MIN. EMBED INTO MASONRY OR CONC.

DIRECTLY INTO MASONRY OR CONC.
1-1/4" MIN. EMBED INTO MASONRY OR CONC.

**#14 SMS**

INTO APPROVED MULLIONS (NO SHIM SPACE)

Approved as complying with the Florida Building Code
Date 03/17/05
NOA# 05-0103.04
Miami-Dade Product Control Division
By M Shank

Engr: DR. HUMAYOUN FAROOQ
STRUCTURES
FLA. PE # 16357
C.A.N. 3538

DEC 22 2004

AL-FAROOQ CORPORATION
ENGINEERS, PLANNERS & PRODUCT DESIGN
1235 SW 87 AVE
MIAMI, FLORIDA 33174
TEL. (305) 264-8100 FAX. (305) 262-6978

COMP-ANL\W04-57JW

TRADITION PLUS ALUM CLAD WOOD RADIUS WDW.

JELD WEN WINDOW DIVISION
201 EVANS ROAD
RANTOUL, ILLINOIS 61866
TEL. (217) 893-4444 FAX (217) 893-7650

revisions:

| no | date | by | description |
|---|---|---|---|
| | | | |

date: 06-19-04
scale: 1/2" = 1"
dr. by: HAMID
chk. by:

drawing no.
W04-57

sheet 2 of 4

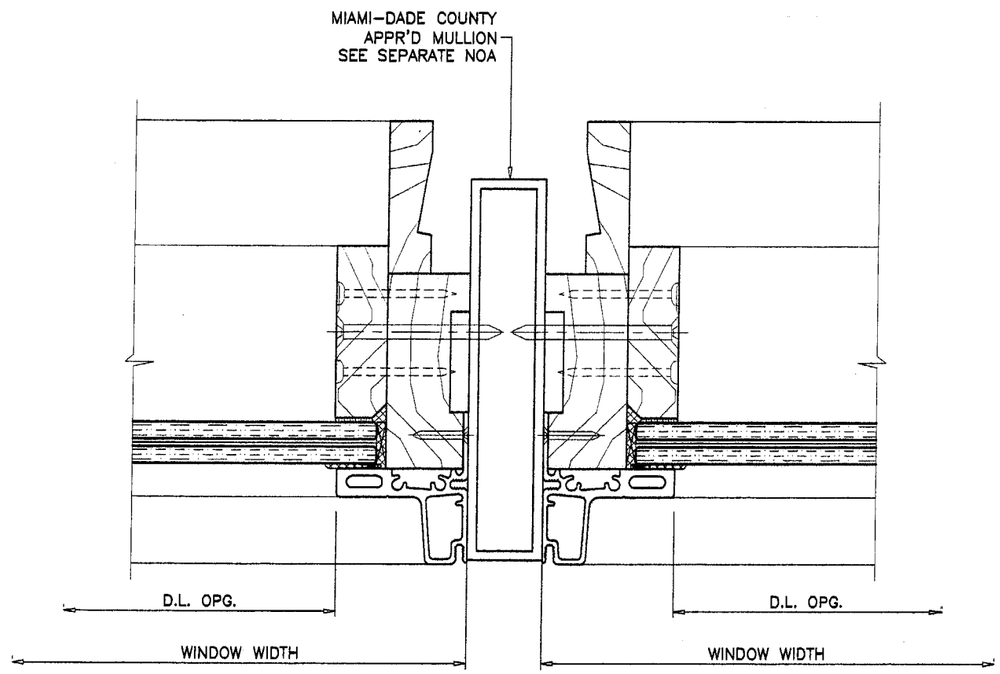


| ITEM # | PART NO. | REQD. | DESCRIPTION | MATERIAL | MANF./SUPPLIER/REMARKS |
|---|---|---|---|---|---|
| 1 | RT-10 | 4 | FRAME HEAD/SILL/JAMB | WOOD | JELD-WEN |
| 2 | PA1-093 | 4 | FRAME NOSING | 6063-T5 | - |
| 3 | SP-21 | 4 | GLASS STOP | WOOD | JELD-WEN |
| 4 | - | 4 | INTERIOR STOP | WOOD | JELD-WEN |
| 5 | - | AS REQD. | NAILING FIN | PVC | - |
| 6 | - | - | - | - | - |
| 7 | AS REQD. | 3/16" X 1-1/2" | 'T' NAILS IN DOUBLE ROWS | - | AT 4" FROM ENDS & 8" O.C. MAX. |
| 8 | #6 X 3/4" | AS REQD. | FRAME NOSING SCREWS | - | AT 12" O.C. MAX. |
| 9 | #8 X 3" | 2/ CORNER | FRAME ASSEMBLY SCREWS | - | - |
| 10 | #8 X 2-1/2" | 1/ CORNER | NOSING ASS'Y SCREWS | - | - |
| 11 | #8 X 7/8" | 1/ CORNER | NOSING ASS'Y SCREWS | - | - |

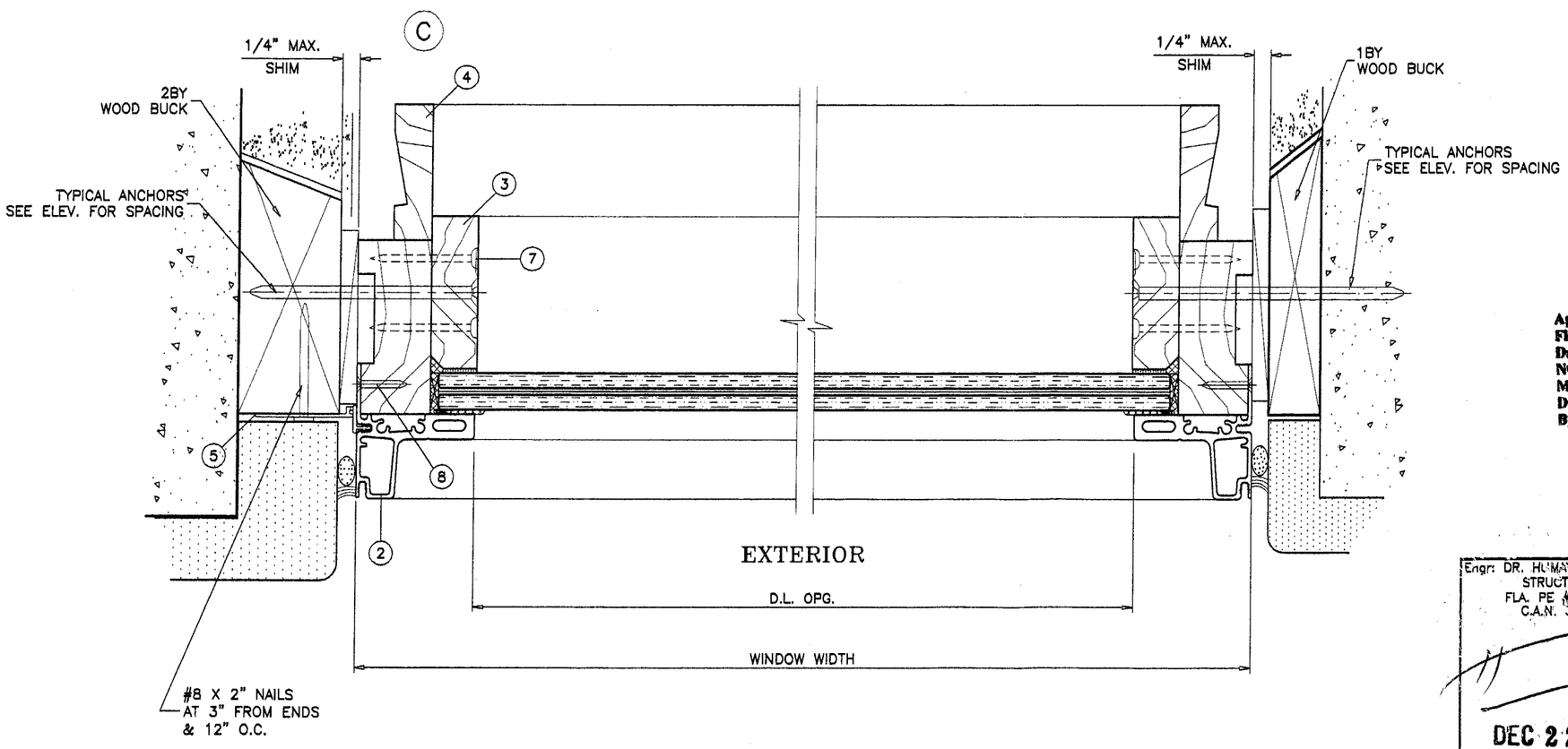


Approved as complying with the Florida Building Code
Date 03/17/05
NOA# 05-0103.04
Miami-Dade Product Control Division
By M Khan

Engr: DR. HUMAYOUN FAROOQ
STRUCTURES
FLA. PE # 16557
C.A.N. 3538

DEC 22 2004


AL-FAROOQ CORPORATION
ENGINEERS, PLANNERS & PRODUCT DESIGN
1235 SW 87 AVE
MIAMI, FLORIDA 33174
TEL. (305) 264-8100 FAX. (305) 262-6978


COMP-ANL\W04-57JW

TRADITION PLUS ALUM CLAD WOOD RADIUS WDW.


JELD WEN WINDOW DIVISION
201 EVANS ROAD
RANTOUL, ILLINOIS 61866
TEL. (217) 893-7650 FAX (217) 893-7650


| revisions: | | | |
|---|---|---|---|
| no | date | by | description |

date: 06-19-04
scale: 1/2" = 1"
dr. by: HAMID
chk. by:

drawing no. W04-57

sheet 3 of 4

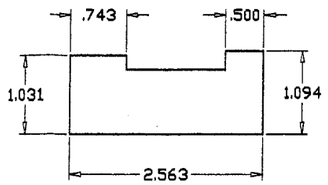


1 FRAME

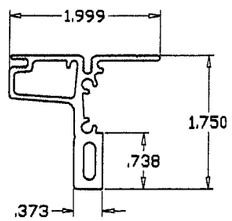


2 FRAME NOSING

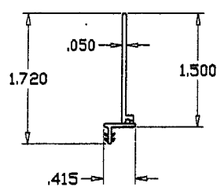


5 NAILING FIN

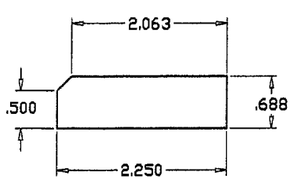


3 GLASS STOP

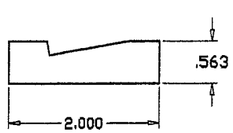


4 INSIDE TRIM

ALL WOOD COMPONENTS TO BE WHITE PINE OR PONDEROSA PINE.

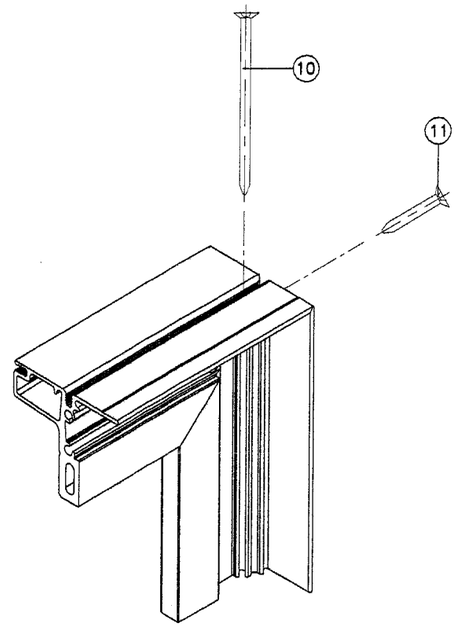


FRAME NOSING CORNER

90° CORNER SHOWN

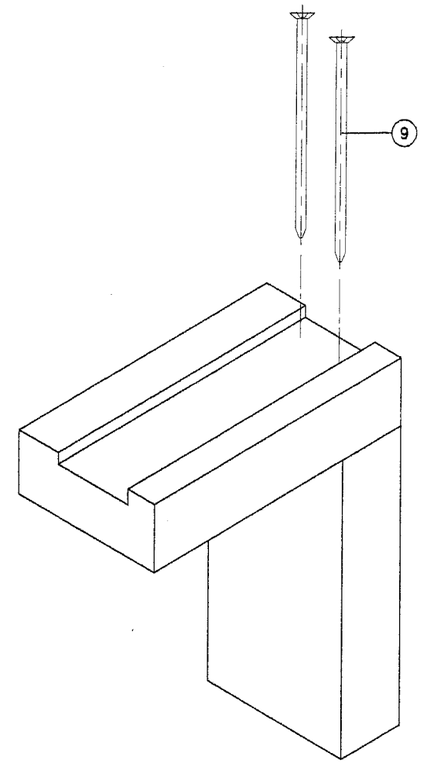


FRAME CORNER

FRAME AND VENT CORNERS SEALED WITH BUTYL TAPE SEALANT. BUTYL CAULK USED IN BETWEEN ALUMINUM/WOOD JOINTS.

**Approved as complying with the Florida Building Code**
**Date** 03/17/05
**NOA#** 05-0103.04
**Miami-Dade Product Control Division**
**By**

Engr: DR. HUMAYOUN FAROOQ
STRUCTURES
FLA. PE # 16557
C.A.N. 3538

DEC 22 2004


**AL-FAROOQ CORPORATION**
ENGINEERS, PLANNERS & PRODUCT DESIGN
1235 SW 87 AVE
MIAMI, FLORIDA 33174
TEL. (305) 264-8100 FAX. (305) 262-6978


COMP-ANL\W04-57.JW

TRADITION PLUS ALUM CLAD WOOD RADIUS WDW.


**JELD WEN** WINDOW DIVISION
201 EVANS ROAD
RANTOUL, ILLINOIS 61866
TEL (217) 893-4444 FAX (217) 893-7650


revisions:

| no | date | by | description |
|---|---|---|---|
| | | | |

date: 06-19-04
scale: 1/2" = 1"
dr. by: HAMID
chk. by:

drawing no.
W04-57