MIAMI-DADE COUNTY
BUILDING CODE COMPLIANCE OFFICE (BCCO)
PRODUCT CONTROL DIVISION

MIAMI-DADE COUNTY, FLORIDA
METRO-DADE FLAGLER BUILDING
140 WEST FLAGLER STREET, SUITE 1603
MIAMI, FLORIDA 33130-1563
(305) 375-2901 FAX (305) 375-2908
www.buildingcodeonline.com

NOTICE OF ACCEPTANCE (NOA)

Universal Aluminum Windows & Doors, Inc.
1675 W. 31ST Place
Hialeah, FL 33012

SCOPE:

This NOA is being issued under the applicable rules and regulations governing the use of construction materials. The documentation submitted has been reviewed by Miami-Dade County Product Control Division and accepted by the Board of Rules and Appeals (BORA) to be used in Miami Dade County and other areas where allowed by the Authority Having Jurisdiction (AHJ).

This NOA shall not be valid after the expiration date stated below. The Miami-Dade County Product Control Division (In Miami Dade County) and/or the AHJ (in areas other than Miami Dade County) reserve the right to have this product or material tested for quality assurance purposes. If this product or material fails to perform in the accepted manner, the manufacturer will incur the expense of such testing and the AHJ may immediately revoke, modify, or suspend the use of such product or material within their jurisdiction. BORA reserves the right to revoke this acceptance, if it is determined by Miami-Dade County Product Control Division that this product or material fails to meet the requirements of the applicable building code.

This product is approved as described herein, and has been designed to comply with the High Velocity Hurricane Zone of the Florida Building Code.

DESCRIPTION:Series "Rebecca" Outswing Aluminum French Door w/(2)-surface bolts(active panel)

APPROVAL DOCUMENT: Drawing No. **W04-81**, titled "Series Rebecca Alum Outswing French Door -LMI, sheets 1 through 5 of 5, prepared by Al Farooq Corporation, dated 09/13/04 and last revised on 04-28-05, signed and sealed by Dr. Humayoun Farooq, P.E., bearing the Miami-Dade County Product Control Approval stamp with the Notice of Acceptance number and Approval date by the Miami-Dade County Product Control Division.

MISSILE IMPACT RATING: Large Missile Impact Resistant

LABELING: Each unit shall bear a permanent label with the manufacturer's name or logo, city, state and following statement: "Miami-Dade County Product Control Approved", unless otherwise noted herein.

RENEWAL of this NOA shall be considered after a renewal application has been filed and there has been no change in the applicable building code negatively affecting the performance of this product.

TERMINATION of this NOA will occur after the expiration date or if there has been a revision or change in the materials, use, and/or manufacture of the product or process. Misuse of this NOA as an endorsement of any product, for sales, advertising or any other purposes shall automatically terminate this NOA. Failure to comply with any section of this NOA shall be cause for termination and removal of NOA.

ADVERTISEMENT: The NOA number preceded by the words Miami-Dade County, Florida, and followed by the expiration date may be displayed in advertising literature. If any portion of the NOA is displayed, then it shall be done in its entirety.

INSPECTION: A copy of this entire NOA shall be provided to the user by the manufacturer or its distributors and shall be available for inspection at the job site at the request of the Building Official.
This NOA consists of this page 1 and evidence sheet E-1, as well as, approval document mentioned above.
The submitted documentation was reviewed by **Ishaq I. Chanda, P.E.**

PRODUCT CONTROL ACCEPTED

NOA No 05-0104.04
Expiration Date: May 19, 2010
Approval Date: May 19, 2005

4/12/15

Universal Aluminum Windows & Doors, Inc.

NOTICE OF ACCEPTANCE: EVIDENCE SUBMITTED

A. DRAWINGS

1. Manufacturer's die drawings and sections.
2. Drawing No. **W04-81**, titled "Series Rebecca Alum Outswing French Door -LMI, sheets 1 through 5 of 5, prepared by Al Farooq Corporation, dated 09/13/04 and last revised on 04-28-05, signed and sealed by Dr. Humayoun Farooq, P.E.

B. TESTS: Test reports on 1) Air Infiltration Test, per FBC, TAS 202-94
2) Uniform Static Air Pressure Test, Loading per FBC, TAS 20294
3) Water Resistance Test, per FBC, TAS 202-94
4) Forced Entry Test, per FBC 2411 3.2.1 and TAS 202-94
5) Small Missile Impact Test per FBC, TAS 201-94
6) Cyclic Wind Pressure Loading per FBC, TAS 203-94

Along with installation diagram of an outswing double French doors prepared by Fenestration Testing Laboratories, Test Report 4330 (**FTL04145**) dated September 14, 2004, signed and sealed by Edmundo Largaespada, P.E.

C. CALCULATIONS

1. Anchor verification calculations dated November 15, 2004, prepared by Al-Farooq Corporation, signed and sealed by Dr. Humayoun Farooq, P.E.

D. QUALITY ASSURANCE

1. Miami Dade /Building Code Compliance Office (BCCO)

E. MATERIAL CERTIFICATIONS

1. Notice of Acceptance No. **03-0225.10** issued to Glasslam NGI, Inc. for "Safety Plus II" laminated glass, expiring on 08/07/2008.
2. Notice of Acceptance No. **01-0205.02** issued to Solutia, Inc. for "Saflex/Keepsafe Maximum" dated 05/17/01, expiring on 05/21/2006
3. Notice of Acceptance No. **01-1204.01** issued to E. I. DuPont DeNemours. for "Sentry Glass ® Plus", expiring on 01/14/2007

E. STATEMENTS

1. Letter of conformance and "no financial interest", dated 10-15-2004 signed & sealed by Dr. Humayoun Farooq, P.E.
2 Statement letter of compliance, part of the test report, issued by Fenestration Testing lab, signed and sealed by, P.E.
4. Addendum letter dated 01-10-2000 issued by Fenestration Testing Lab, clarifying glazing, signed and sealed by Edmundo Largaespada, P.E.

F. OTHER

1. Glazing complies w/ ASTME1300-98.

Ishaq I. Chanda

Ishaq I. Chanda, P.E.
Product Control Examiner
NOA No 05-0104.04
Expiration Date: May 19, 2010
Approval Date: May 19, 2005

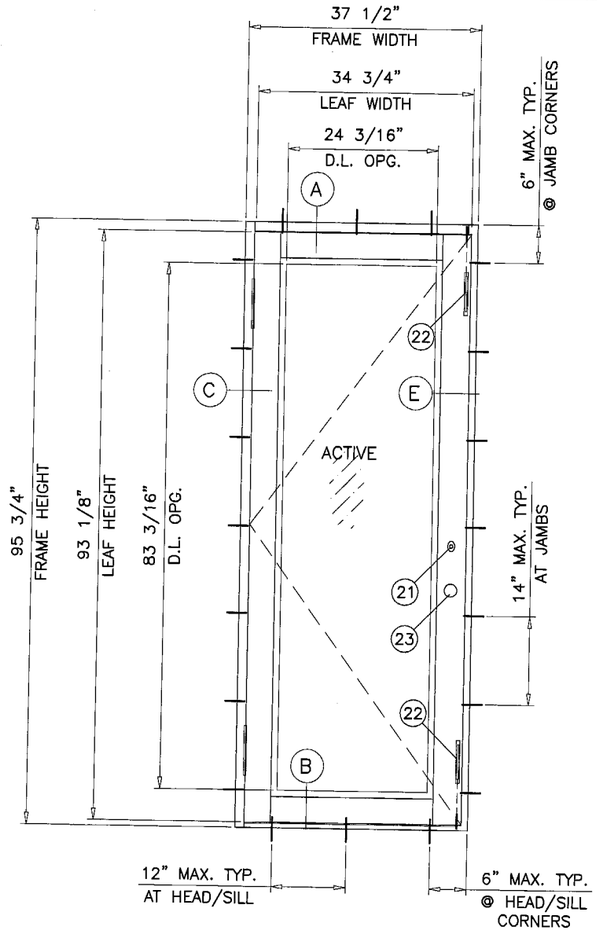

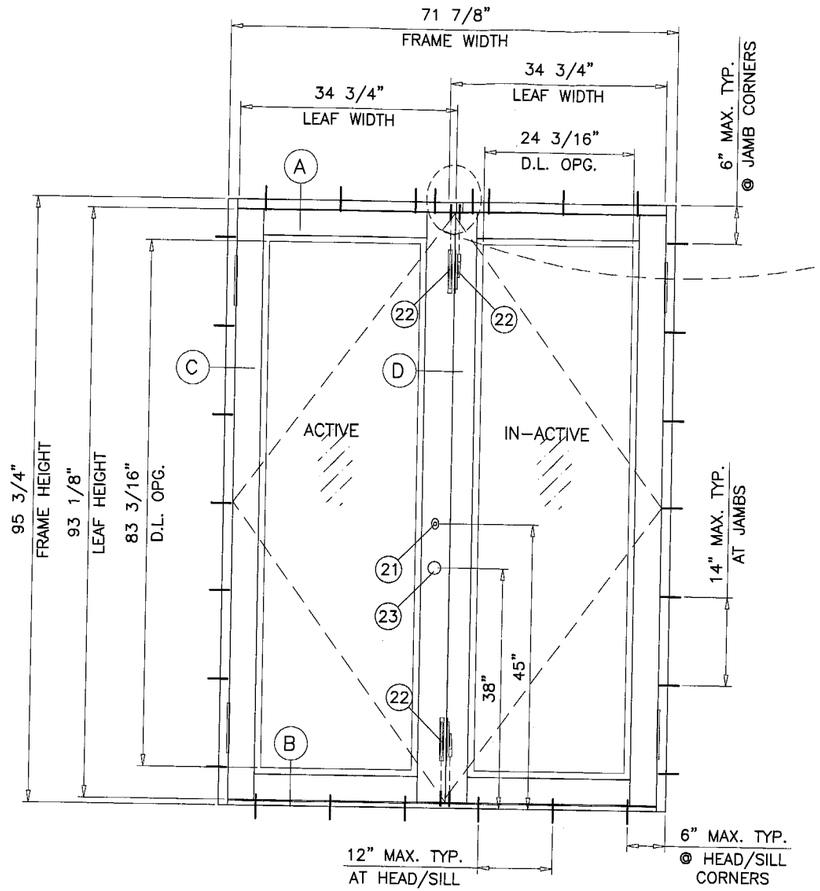

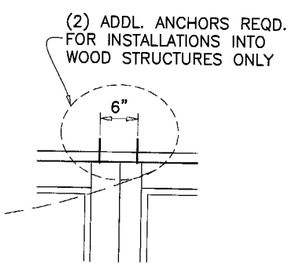

TYPICAL ELEVATION
(XX)
TESTED UNIT

MAXIMUM DESIGN LOAD RATING = + 85.0 PSF
(FOR SIZES SHOWN ABOVE OR SMALLER) − 85.0 PSF

NOTE:
TOP & BOTTOM FLUSH BOLTS OF ACTIVE AND INACTIVE LEAF TO BE ENGAGED DURING PERIODS OF HURRICANE WARNING.

DOORS GLAZED WITH LAMINATED GLASS RATED FOR LARGE MISSILE IMPACT AND REQUIRE NO SHUTTERS.

Approved as complying with the Florida Buiding Code
Date MAY 19, 2005
NOA# 05-0104.04
Miami Dade Product Control Division
By Shaq I. Chank

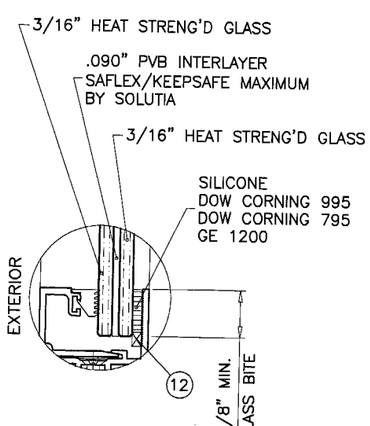

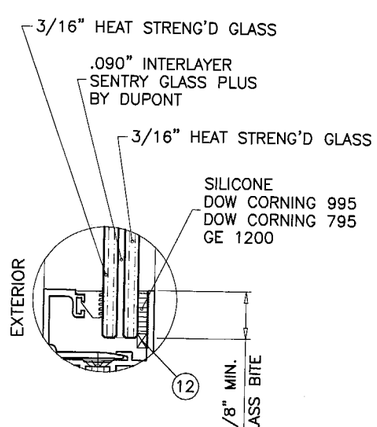

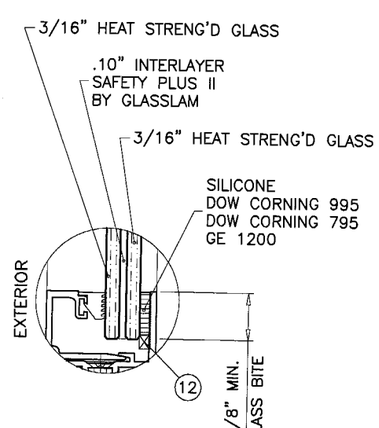

GLAZING OPTIONS

SERIES REBECCA
ALUMINUM OUTSWING FRENCH DOOR

THIS PRODUCT HAS BEEN DESIGNED AND TESTED TO COMPLY WITH THE REQUIREMENTS OF THE FLORIDA BUILDING CODE INCLUDING HIGH VELOCITY HURRICANE ZONE.

WOOD BUCKS BY OTHERS, MUST BE ANCHORED PROPERLY TO TRANSFER LOADS TO THE STRUCTURE.

ANCHORS SHALL BE AS LISTED, SPACED AS SHOWN ON DETAILS. ANCHOR EMBEDMENT TO BASE MATERIAL SHALL BE BEYOND WALL DRESSING OR STUCCO.

ANCHORING OR LOADING CONDITIONS NOT SHOWN IN THESE DETAILS ARE NOT PART OF THIS APPROVAL.

A 33% INCREASE IN ALLOWABLE STRESS WAS USED IN DESIGN OF WOOD ANCHORS.

Engr: DR. HUMAYOUN FAROOQ
STRUCTURES
FLA. PE # 16557
C.A.N. 3538

APR 2 8 2005

AL-FAROOQ CORPORATION
ENGINEERS, PLANNERS & PRODUCT DESIGN
1235 SW 87 AVE
MIAMI, FLORIDA 33174
TEL. (305) 264-8100 FAX. (305) 262-6978
COMP-ANL\W04-81UAW

SERIES REBECCA ALUM OUTSWING FRENCH DOOR (L.M.I.)

UNIVERSAL ALUMINUM WINDOWS
1675 W. 31ST PLACE
HIALEAH, FL. 33012
TEL. (305) 825-7900 FAX (305) 825-5805

revisions:

no	date	by	description
A	04.27.05		REV. PER BCCO COMMENTS

date: 09-13-04
scale: 1/2"=1'-0"
dr. by: HAMID
chk. by:

drawing no.
W04-81

sheet 1 of 5

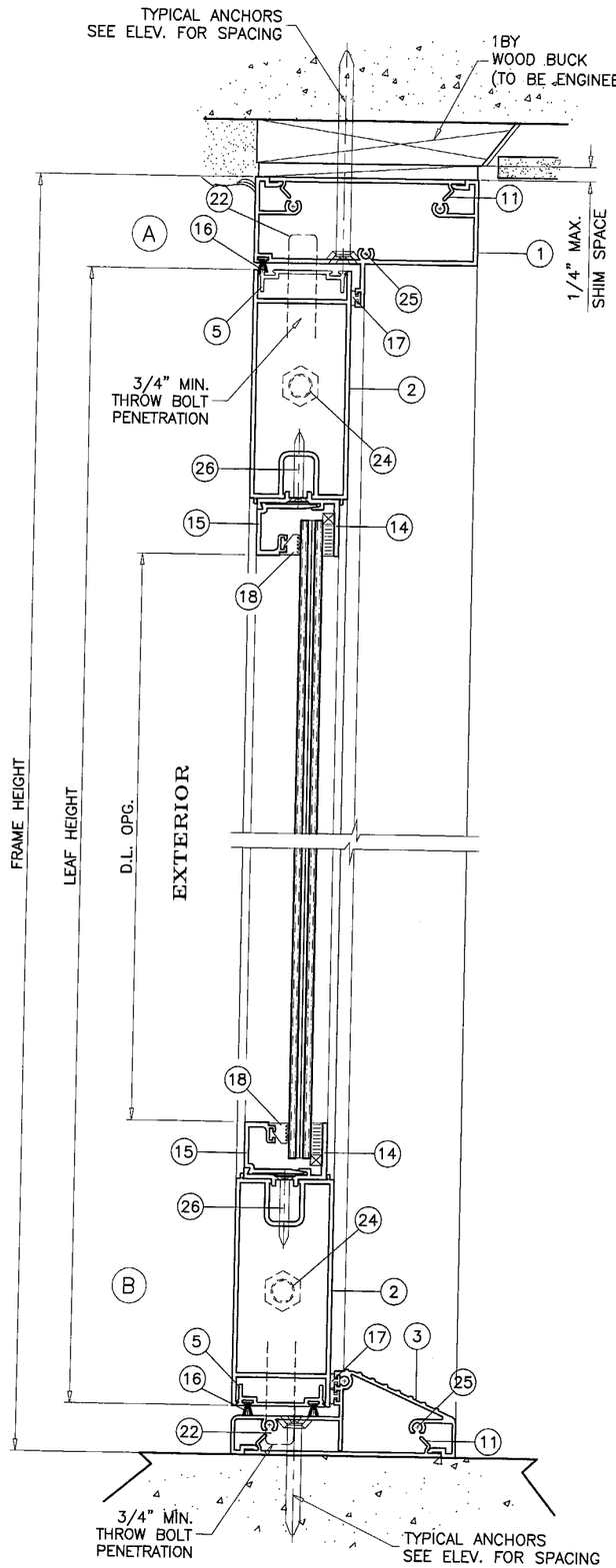

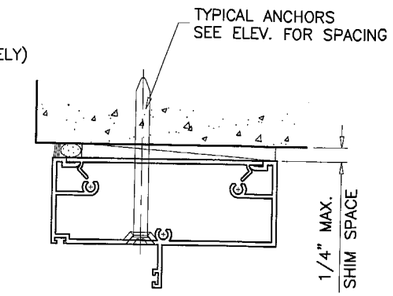

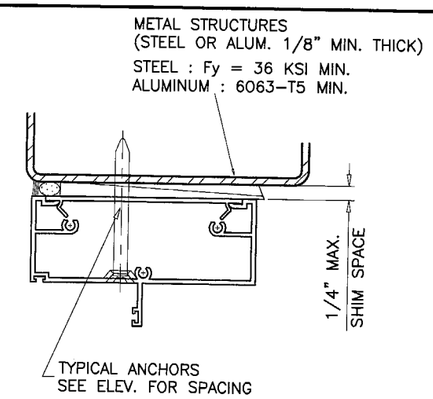

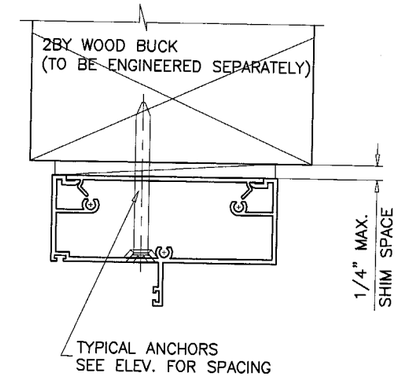

TYPICAL ANCHORS: SEE ELEV. FOR SPACING

1/4" DIA. TAPCONS

INTO 2BY WOOD BUCKS OR WOOD STRUCTURES
1-3/8" MIN. WOOD PENETRATION

THRU 1BY WOOD BUCKS INTO MASONRY OR CONC.
1-1/4" MIN. EMBED INTO MASONRY OR CONC.

1/4" DIA. TAPCONS

DIRECTLY INTO MASONRY OR CONCRETE
1-1/4" MIN. EMBED INTO MASONRY OR CONCRETE

#14" SMS OR SELF DRILLING SCREWS

INTO METAL STRUCTURES (1/8" MIN. THICKNESS)
INTO APPROVED MULLIONS (NO SHIM SPACE)

TYPICAL EDGE DISTANCE

INTO CONCRETE AND MASONRY = 2-1/2" MIN.
INTO WOOD STRUCTURE = 1" MIN.

SEALANTS:

FRAME CORNERS, ASSEMBLY SCREWS AND HEADS OF ANCHOR SCREWS AT SILL TO BE SEALED WITH SEALER.
LEAF JOINTS SEALED WITH SILICONE.

LOCKS:

METALLIC DEAD BOLT LOCK, KEY OPERATED ON EXTERIOR AND THUMB TURN ON INTERIOR AT ACTIVE LEAF LOCK STILE, 45" FROM BOTTOM.

DOOR HANDLE AT 38" FROM BOTTOM.

MANUALLY OPERATED CONCEALED FLUSH BOLTS AT TOP & BOTTOM OF ACTIVE AND INACTIVE LEAF.
(MUST BE ENGAGED DURING PERIODS OF HURRICANE WARNING)

Approved as complying with the Florida Buiding Code
Date MAY 19, 2005
NOA# 05-0104.04
Miami Dade Product Control Division
By Ishwar I. Chand

WOOD BUCKS NOT BY UNIVERSAL WDWS., MUST SUSTAIN LOADS IMPOSED BY GLAZING SYSTEM AND TRANSFER THEM TO THE BUILDING STRUCTURE.

Engr: DR. HUMAYOUN FAROOQ
STRUCTURES,
FLA. PE # 16557
C.A.N. 3538

APR 2 8 2005

AL-FAROOQ CORPORATION
ENGINEERS, PLANNERS & PRODUCT DESIGN
1235 SW 87 AVE
MIAMI, FLORIDA 33174
TEL. (305) 264-8100 FAX. (305) 262-6978

COMP-ANL\W04-81UAW

SERIES REBECCA ALUM OUTSWING FRENCH DOOR (L.M.I.)

UNIVERSAL ALUMINUM WINDOWS
1675 W. 31ST PLACE
HIALEAH, FL. 33012
TEL. (305) 825-7900 FAX (305) 825-5805

revisions:

no	date	by	description
A	04.27.05		REV. PER BCCO COMMENTS

date: 09-13-04
scale: 3/8" = 1"
dr. by: HAMID
chk. by:

drawing no.
W04-81

sheet 2 of 5

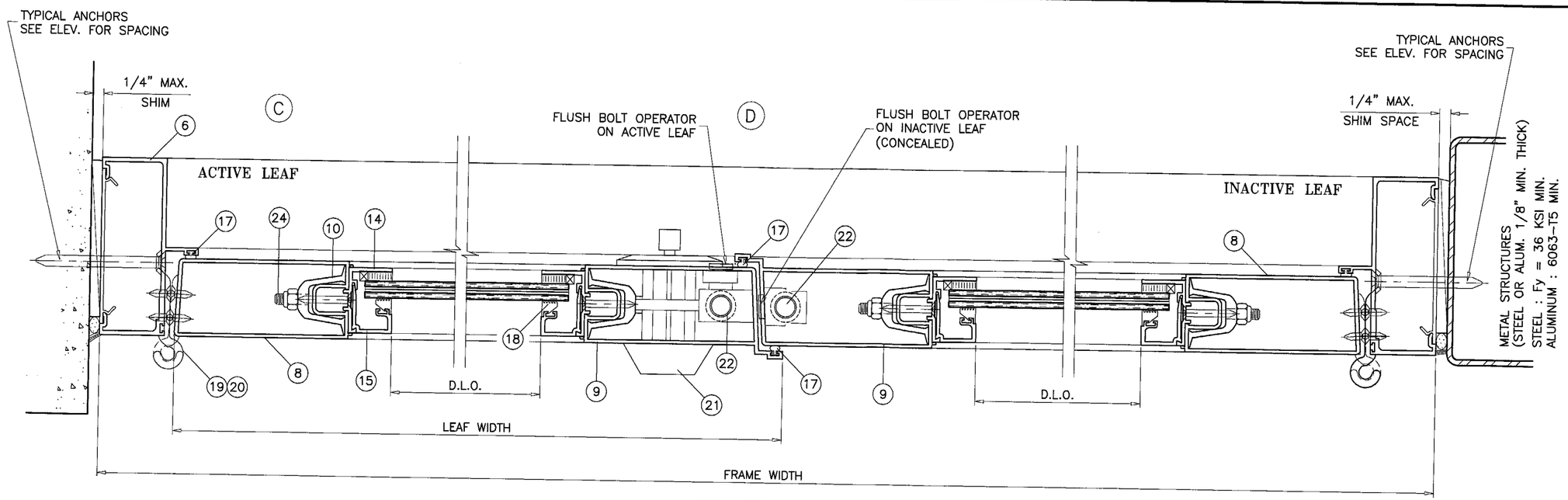

EXTERIOR

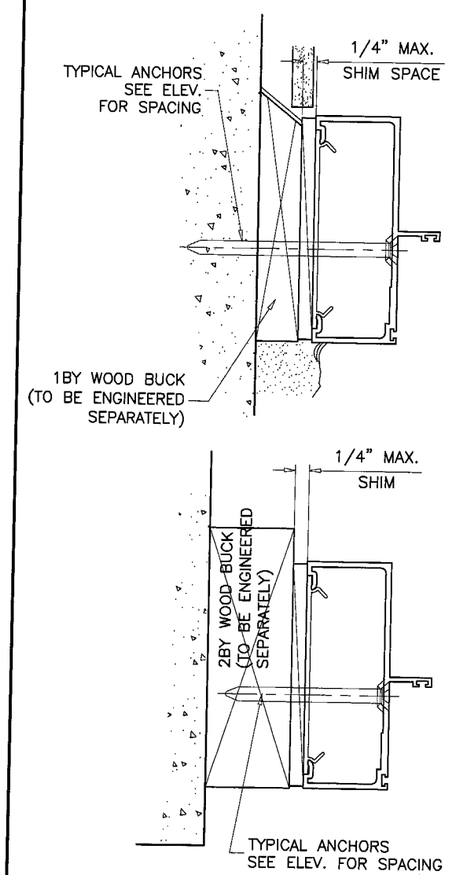

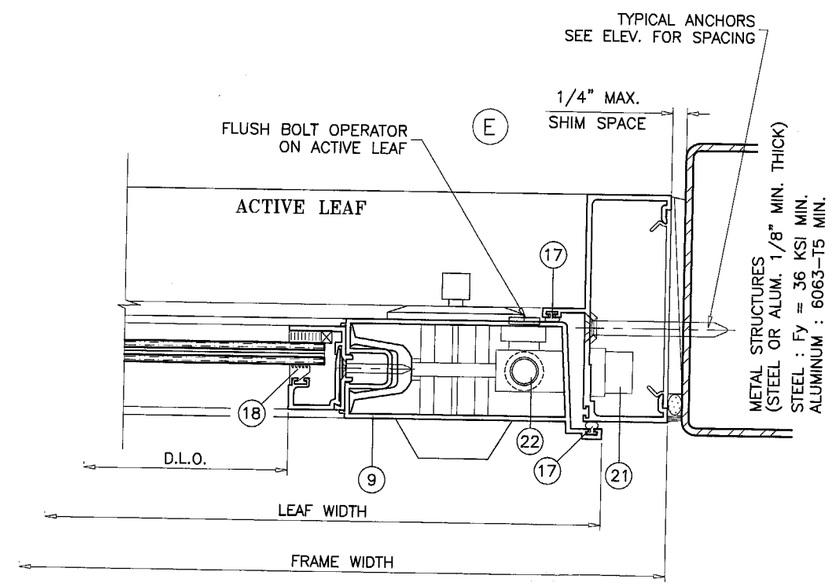

EXTERIOR

Approved as complying with the Florida Building Code
Date MAY 19, 2005
NOA# 05-0104.04
Miami Dade Product Control Division
By Ishaq I. Chanda

Engr: DR. HUMAYOUN FAROOQ
STRUCTURES
FLA. PE # 16557
C.A.N. 3538

APR 2 8 2005

AL-FAROOQ CORPORATION
ENGINEERS, PLANNERS & PRODUCT DESIGN
1235 SW 87 AVE
MIAMI, FLORIDA 33174
TEL. (305) 264-8100 FAX. (305) 262-6978
COMP-ANL\W04-81UAW

SERIES REBECCA ALUM OUTSWING FRENCH DOOR (L.M.I.)

UNIVERSAL ALUMINUM WINDOWS
1675 W. 31ST PLACE
HIALEAH, FL. 33012
TEL. (305) 825-5900 FAX (305) 825-5805

revisions:

no	date	by	description
A	04.27.05		REV. PER BCCO COMMENTS

date: 09-13-04
scale: 3/8" = 1"
dr. by: HAMID
chk. by:

drawing no.
W04-81

sheet 3 of 5

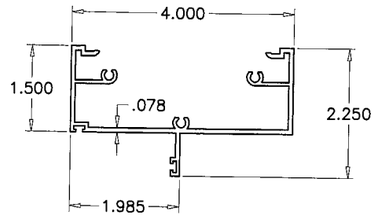

1 FRAME HEAD

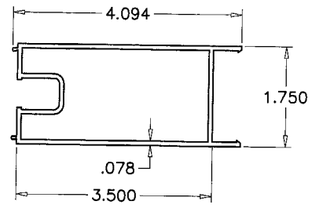

2 DOOR LEAF HEAD & SILL

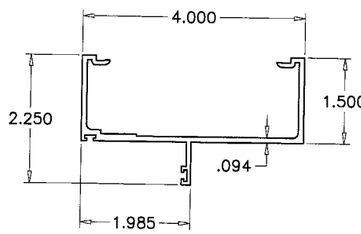

6 FRAME JAMB

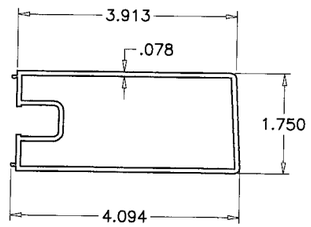

8 DOOR LEAF JAMB SIDE

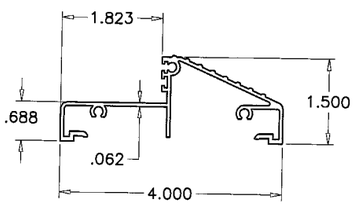

3 THRESHOLD

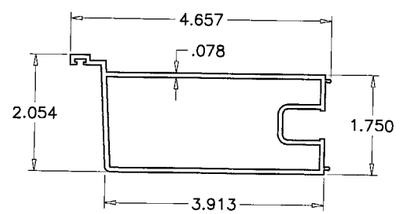

9 DOOR LEAF LOCK SIDE

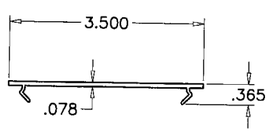

11 SHEAR PLATE

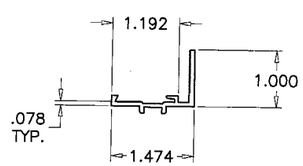

14 GLASS ADAPTER

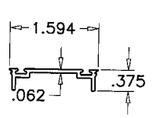

5 COVER TOP & BOTTOM RAIL

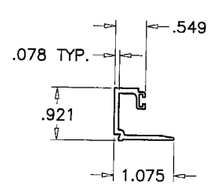

15 GLASS STOP

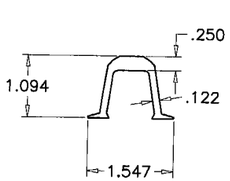

10 JAMB STIFFENER

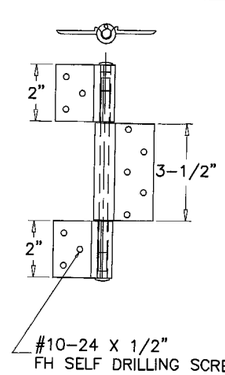

19 20 3 PIECE HINGE

ITEM #	PART #	QUANTITY	DESCRIPTION	MATERIAL	MANF./SUPPLIER/REMARKS
1	UA-1089	AS REQD.	FRAME HEAD	6063-T6	
2	UA-1092	2/ LEAF	TOP AND BOTTOM RAIL	6063-T6	–
3	UA-1094	1	DOOR FRAME SILL	6063-T6	–
5	UA-1096	2/ LEAF	SNAP COVER TOP & BOTTOM RAIL	6063-T5	–
6	UA-1091	2	DOOR FRAME JAMB	6063-T6	–
7	–	–	–	–	–
8	UA-1090	1/ LEAF	DOOR LEAF JAMB – HINGE SIDE	6063-T6	–
9	UA-1093	1/ LEAF	DOOR LEAF – LOCK SIDE	6063-T6	–
10	UA-1095	4/ LEAF	JAMB STIFFENER	6063-T6	4" LONG
11	A-4008	AS REQD.	SHEAR PLATE @ ANCHOR LOCATIONS	6063-T5	6-7/8" LONG
12	–	AS REQD.	GLAZING TAPE SPACER (1/8" X 3/8" X 1" LONG)	–	4" FROM CORNERS & AT MIDSPAN OF VERTICALS
13	–	AS REQD.	WEDGE GASKET	VINYL	–
14	UA-1102	AS REQD.	GLASS ADAPTER	6063-T6	–
15	UA-1101	AS REQD.	GLASS STOP	6063-T6	–
16	S-7800	AS REQD.	FIN-SEAL WEATHERSTRIPPING	–	.187 X .330
17	WV-3021	AS REQD.	BULB WEATHERSTRIPPING	VINYL	WIBORG
18	UA-1103	AS REQD.	GLAZING VINYL	PVC	–
19	UA-1097	2/ LEAF	CENTER HINGE WITH SS PIN	6063-T6	10" FROM TOP & BOTTOM
20	UA-1098	2/ LEAF	TOP & BOTTOM HINGE WITH SS PIN	6063-T6	10" FROM TOP & BOTTOM
21	–	1	DEAD BOLT LOCK SET	–	WESLOCK INTL.
22	–	2/ LEAF	MANUALLY OPERATED FLUSH BOLT	ZINC CAST	DELTA IND.
23	–	1	CONVENTIONAL DOOR KNOB SET	–	WESLOCK INTL.
24	–	2/ LEAF	3/8" DIA. THREADED ROD	STEEL	–
25	#10 X 1"	AS REQD.	FRAME ASSY. SCREWS	–	PAN HEAD SMS
26	#8 X 1-1/4"	AS REQD.	GLAZING ADAPTER SCREWS, AT 6" FROM ENDS & 12" O.C.	–	FH SELF DRILLING

Approved as complying with the Florida Buiding Code
Date MAY 19, 2005
NOA# 05-0104.04
Miami Dade Product Control Division
By (Shaq). Chanda

Engr: DR. HUMAYOUN FAROOQ
STRUCTURES
FLA. PE # 16557
C.A.N. 3538

APR 2 8 2005

AL-FAROOQ CORPORATION
ENGINEERS, PLANNERS & PRODUCT DESIGN
1235 SW 87 AVE
MIAMI, FLORIDA 33174
TEL. (305) 264-8100 FAX. (305) 262-6978
COMP-ANL\W04-81UAW

SERIES REBECCA ALUM OUTSWING FRENCH DOOR (L.M.I.)

UNIVERSAL ALUMINUM WINDOWS
1675 W. 31ST PLACE
HIALEAH, FL. 33012
TEL. (305) 825-7900 FAX (305) 825-5805

revisions:

no	date	by	description
A	04.27.05		REV. PER BCCO COMMENTS

date: 09-13-04
scale: 3/8" = 1"
dr. by: HAMID
chk. by:

drawing no. W04-81

sheet 4 of 5

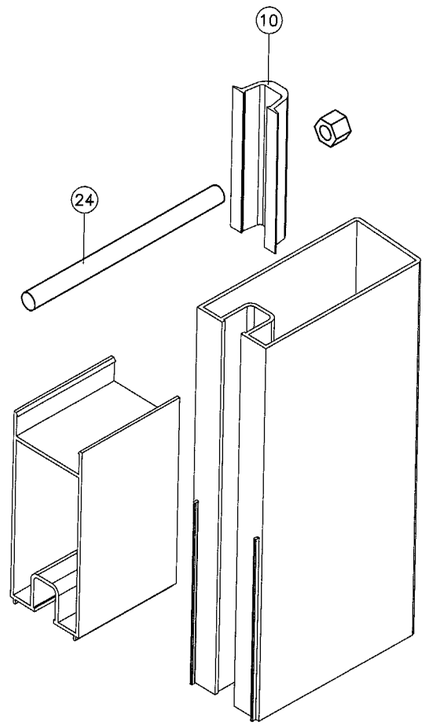

LEAF CORNER

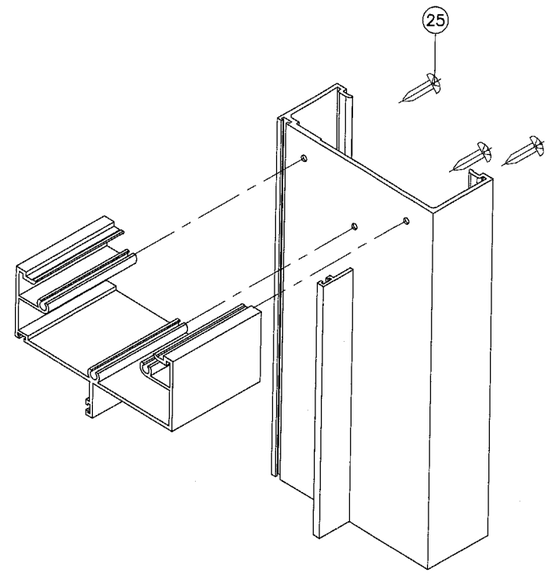

DOOR CORNER

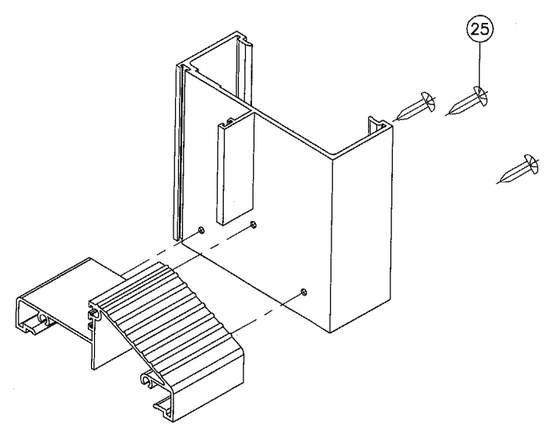

DOOR SILL CORNER

Approved as complying with the Florida Building Code
Date MAY 19, 2005
NOA# 05-0104.04
Miami Dade Product Control Division
By Craig L. Chanda

Engr: DR. HUMAYOUN FAROOQ
STRUCTURES
FLA. PE # 16557
C.A.N. 3538

APR 28 2005

SERIES REBECCA ALUM OUTSWING FRENCH DOOR (L.M.I.)

UNIVERSAL ALUMINUM WINDOWS
1675 W. 31ST PLACE
HIALEAH, FL. 33012
TEL. (305) 825-5805 FAX (305) 825-5900

AL-FAROOQ CORPORATION
ENGINEERS, PLANNERS & PRODUCT DESIGN
1235 SW 87 AVE
MIAMI, FLORIDA 33174
TEL. (305) 264-8100 FAX. (305) 262-6978
COMP-ANL\W04-81UAW

revisions:

no	date	by	description
A	04.27.05		REV. PER BCCO COMMENTS

date: 09-13-04
scale: 3/8" = 1"
dr. by: HAMID
chk. by:

drawing no.
W04-81

sheet 5 of 5