MIAMI-DADE COUNTY

BUILDING CODE COMPLIANCE OFFICE (BCCO)
PRODUCT CONTROL DIVISION

MIAMI-DADE COUNTY, FLORIDA
METRO-DADE FLAGLER BUILDING
140 WEST FLAGLER STREET, SUITE 1603
MIAMI, FLORIDA 33130-1563
(305) 375-2901 FAX (305) 375-2908

NOTICE OF ACCEPTANCE (NOA)

Schuco USA, L.P.
240 Pane Road
Newington, CT 06111

SCOPE:
This NOA is being issued under the applicable rules and regulations governing the use of construction materials. The documentation submitted has been reviewed by Miami-Dade County Product Control Division and accepted by the Board of Rules and Appeals (BORA) to be used in Miami Dade County and other areas where allowed by the Authority Having Jurisdiction (AHJ).

This NOA shall not be valid after the expiration date stated below. The Miami-Dade County Product Control Division (In Miami Dade County) and/or the AHJ (in areas other than Miami Dade County) reserve the right to have this product or material tested for quality assurance purposes. If this product or material fails to perform in the accepted manner, the manufacturer will incur the expense of such testing and the AHJ may immediately revoke, modify, or suspend the use of such product or material within their jurisdiction. BORA reserves the right to revoke this acceptance, if it is determined by Miami-Dade County Product Control Division that this product or material fails to meet the requirements of the applicable building code.

This product is approved as described herein, and has been designed to comply with the Florida Building Code, including the High Velocity Hurricane Zone.

DESCRIPTION: Series "IMP" Extruded White PVC Casement Window - Impact

APPROVAL DOCUMENT: Drawing No. **S-2487**, titled "Vinyl Casement Window "IMP" Corona, Suprema Plus & Insul-Sash Single Units", sheets 1 through 4of 4, dated 11/01/04, with revision # 2 dated 4/13/05, prepared by RW Building Consultants, Inc., signed and sealed by Wendell W. Haney, P.E., bearing the Miami-Dade County Product Control Approval stamp with the Notice of Acceptance number and approval date by the Miami-Dade County Product Control Division.

MISSILE IMPACT RATING: Large and Small Missile Impact Resistant

LABELING: Each unit shall bear a permanent label with the manufacturer's name or logo, city, state and following statement: "Miami-Dade County Product Control Approved", unless otherwise noted herein.

RENEWAL of this NOA shall be considered after a renewal application has been filed and there has been no change in the applicable building code negatively affecting the performance of this product.

TERMINATION of this NOA will occur after the expiration date or if there has been a revision or change in the materials, use, and/or manufacture of the product or process. Misuse of this NOA as an endorsement of any product, for sales, advertising or any other purposes shall automatically terminate this NOA. Failure to comply with any section of this NOA shall be cause for termination and removal of NOA.

ADVERTISEMENT: The NOA number preceded by the words Miami-Dade County, Florida, and followed by the expiration date may be displayed in advertising literature. If any portion of the NOA is displayed, then it shall be done in its entirety.

INSPECTION: A copy of this entire NOA shall be provided to the user by the manufacturer or its distributors and shall be available for inspection at the job site at the request of the Building Official.
This NOA consists of this page 1 and evidence page E-1, as well as approval document mentioned above.
The submitted documentation was reviewed by **Manuel Perez, P.E.**

PRODUCT CONTROL ACCEPTED

NOA No 05-0107.03
Expiration Date: May 05, 2010
Approval Date: May 05, 2005

Schuco USA, L.P.

NOTICE OF ACCEPTANCE: EVIDENCE SUBMITTED

A. DRAWINGS

1. Manufacturer's die drawings and sections.
2. Drawing No. **S-2487** titled "Vinyl Casement Window "IMP" Corona, Suprema Plus & Insul-Sash Single Units", sheets 1 through 4 of 4, dated 11/01/04, with revision # 2 dated 4/13/05, prepared by RW Building Consultants, Inc., signed and sealed by Wendell W. Haney, P.E.

B. TESTS

1. Test reports on 1) Air Infiltration Test, per FBC, TAS 202-94
   2) Uniform Static Air Pressure Test, Loading per FBC TAS 202-94
   3) Water Resistance Test, per FBC, TAS 202-94
   4) Large Missile Impact Test per FBC, TAS 201-94
   5) Cyclic Wind Pressure Loading per FBC, TAS 203-94
   6) Forced Entry Test, per FBC 2411.3.2.1 (b) and TAS 202-94

   along with marked-up drawings and installation diagram of pvc casement windows, prepared and issued by ETC Laboratories, Test report No. **ETC-04-189-15441.0** dated 05/24/-06/30/04, signed and sealed by Mark D. Passero, P.E.
   Addendum letter dated 3/10/05.

C. CALCULATIONS

1. Anchor Calculations, ASTM-E1300, and structural analysis, prepared by RW Building Consultants, Inc., dated 12/28/04, signed and sealed by Wendell W. Haney, P.E.

D. QUALITY ASSURANCE

1. Miami Dade Building Code Compliance Office (BCCO).

E. MATERIAL CERTIFICATIONS

1. Notice of Acceptance No. **03-0421.01** issued to Solutia for "Saflex HP", dated 05/22/03, expiring on 04/14/08.

F. STATEMENTS

1. Statement letter of code compliance and no financial interest, dated 12/28/04 signed and sealed by Wendell W. Haney, P.E.
2. Statement letter of code compliance and no financial interest signed and sealed by Matthias Ruehr, P.E.

G. OTHER

1. Letter from the consultant stating that the product is in compliance with the Florida Building Code (FBC).

Manuel Perez, P.E.
Product Control Examiner
NOA No 05-0107.03
Expiration Date: May 05, 2010
Approval Date: May 05, 2005

SCHÜCO USA

Schüco USA, L.P.
240 Pane Road Newington, CT 06111
PH. 860.666.0505 / FAX. 860.666.1695

VINYL CASEMENT WINDOW "IMP" CORONA 3000 / 4000, SUPREMA PLUS & INSUL-SASH SINGLE UNIT

GENERAL NOTES

1. THIS PRODUCT HAS BEEN EVALUATED AND IS IN COMPLIANCE WITH THE FLORIDA BUILDING CODE INCLUDING THE "HIGH VELOCITY HURRICANE ZONE".
2. PRODUCT ANCHORS SHALL BE AS LISTED AND SPACED AS SHOWN ON DETAILS. ANCHOR EMBEDMENT TO BASE MATERIAL SHALL BE BEYOND WALL DRESSING OR STUCCO.
3. WHEN USED IN THE "HIGH VELOCITY HURRICANE ZONE" THIS PRODUCT COMPLIES WITH SECTION 1626 OF THE FLORIDA BUILDING CODE AND DOES NOT REQUIRE AN IMPACT RESISTANT COVERING.
4. WHEN USED IN AREAS OUTSIDE OF THE "HVHZ" REQUIRING WIND-BORNE DEBRIS PROTECTION THIS PRODUCT COMPLIES WITH SECTION 1606.1.4 OF THE FLORIDA BUILDING CODE AND DOES NOT REQUIRE AN IMPACT RESISTANT COVERING.
5. WOOD BUCKS BY OTHERS, MUST BE ANCHORED PROPERLY TO TRANSFER LOADS TO STRUCTURE AND TO BE REVIEWED BY BUILDING OFFICIAL.
6. FOR DESIGN PRESSURE RATING SEE CHART THIS SHEET.
7. THIS PRODUCT MEETS THE WATER REQUIREMENTS FOR HIGH VELOCITY HURRICANE ZONES.

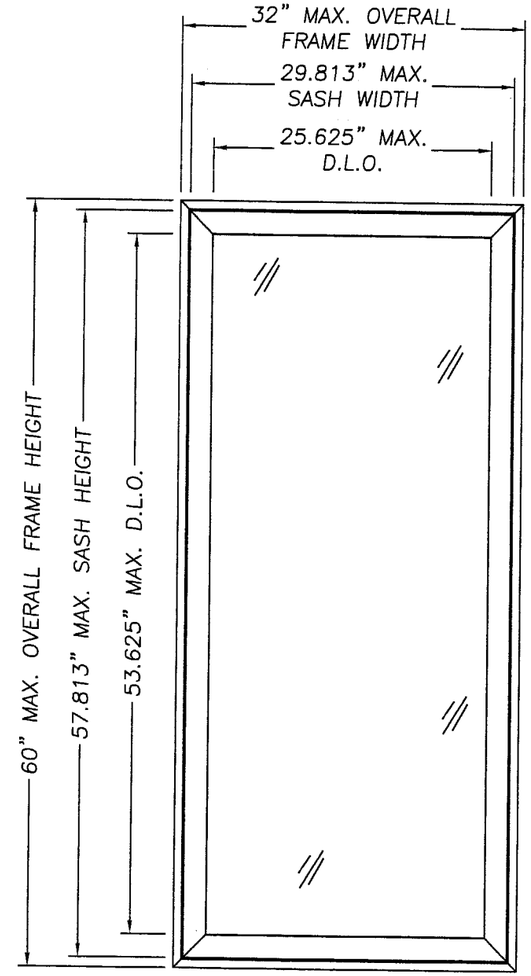

SINGLE CASEMENT UNIT ELEVATION

SINGLE UNIT SIZE	DESIGN PRESSURE RATING (PSF)	
UP TO 32" X 60"	POSITIVE	+65.0 PSF
	NEGATIVE	-70.0 PSF

TABLE OF CONTENTS

SHEET #	DESCRIPTION
1	TYPICAL ELEVATIONS, DESIGN PRESSURES & GENERAL NOTES
2	VERTICAL & HORIZONTAL CROSS SECTIONS
3	WINDOW ANCHORING & GLAZING DETAIL
4	BILL OF MATERIALS & COMPONENTS

Approved as complying with the Florida Building Code
Date MAY 5, 2005
NOA# 05-0107.03
Miami Dade Product Control Division
By Manuel Perez

Documents Prepared By:
RW BUILDING CONSULTANTS, INC.
P.O. Box 230 Valrico FL. 33595
Phone No.: 813.659.9197
Florida Board of Professional Engineers
Certificate Of Authorization No. 9813
Wendell W. Haney, P.E. No. 54158
4/13/05

PRODUCT: VINYL CASEMENT WINDOW "IMP" CORONA, SUPREMA PLUS & INSUL-SASH SINGLE UNITS
PART OR ASSEMBLY: TYPICAL ELEVATIONS, DESIGN PRESSURES & GENERAL NOTES

REVISIONS

NO.	DATE		BY
2	4/13/05	ADD EXTRUDER TO B.O.M.	RW
1	3/12/05	PER DADE COMMENTS	RW

DATE: 11/01/04
SCALE: N.T.S.
DWG. BY: EW
CHK. BY: WWH
DRAWING NO.: S-2487
SHEET 1 OF 4

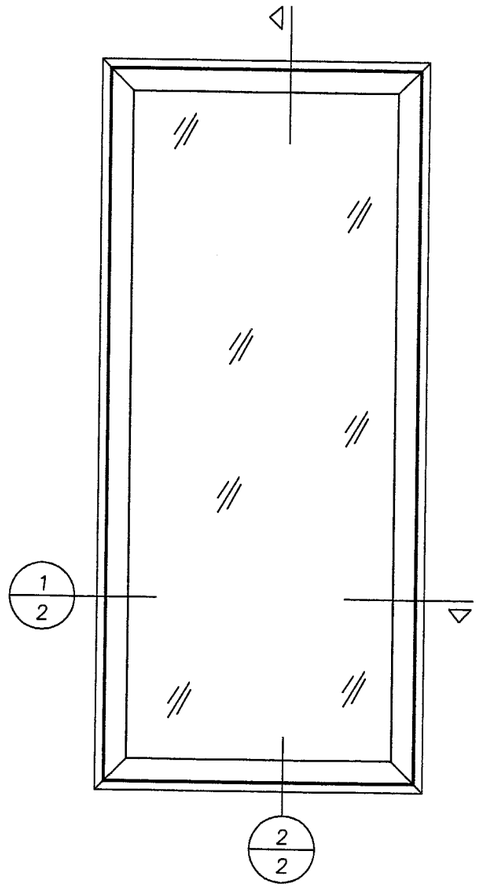

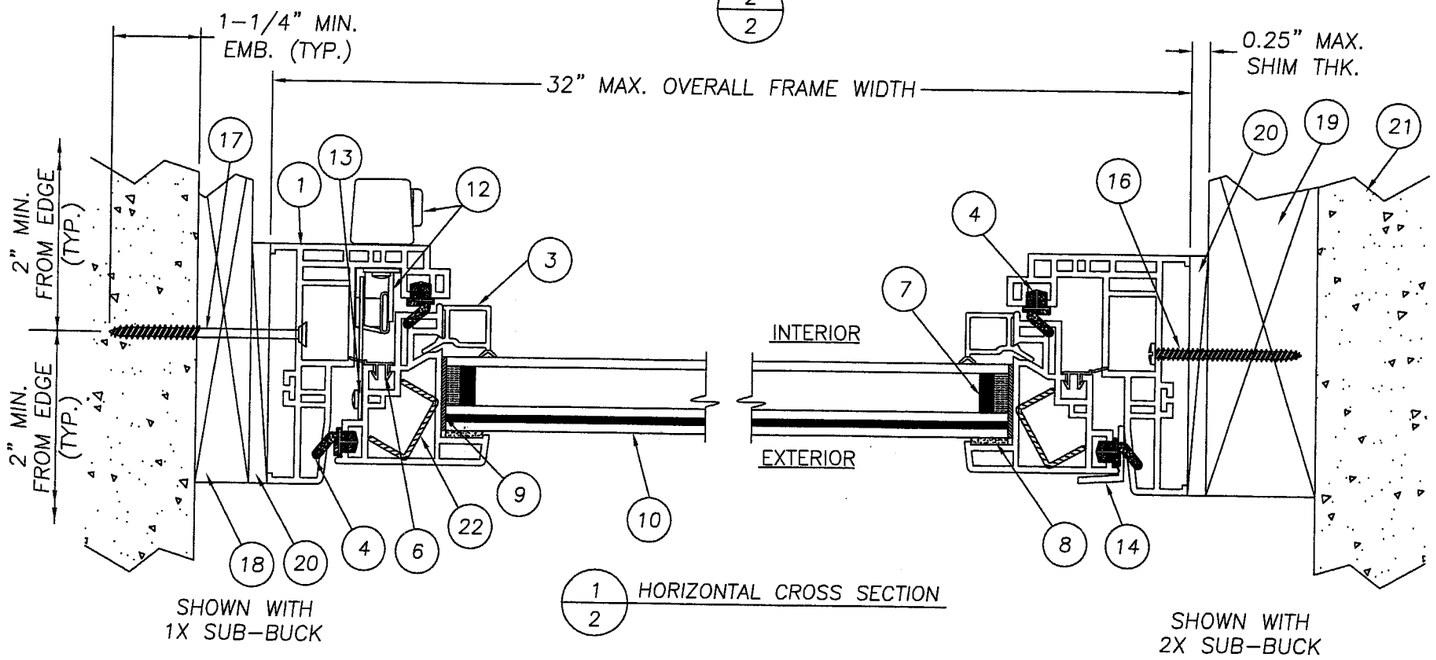

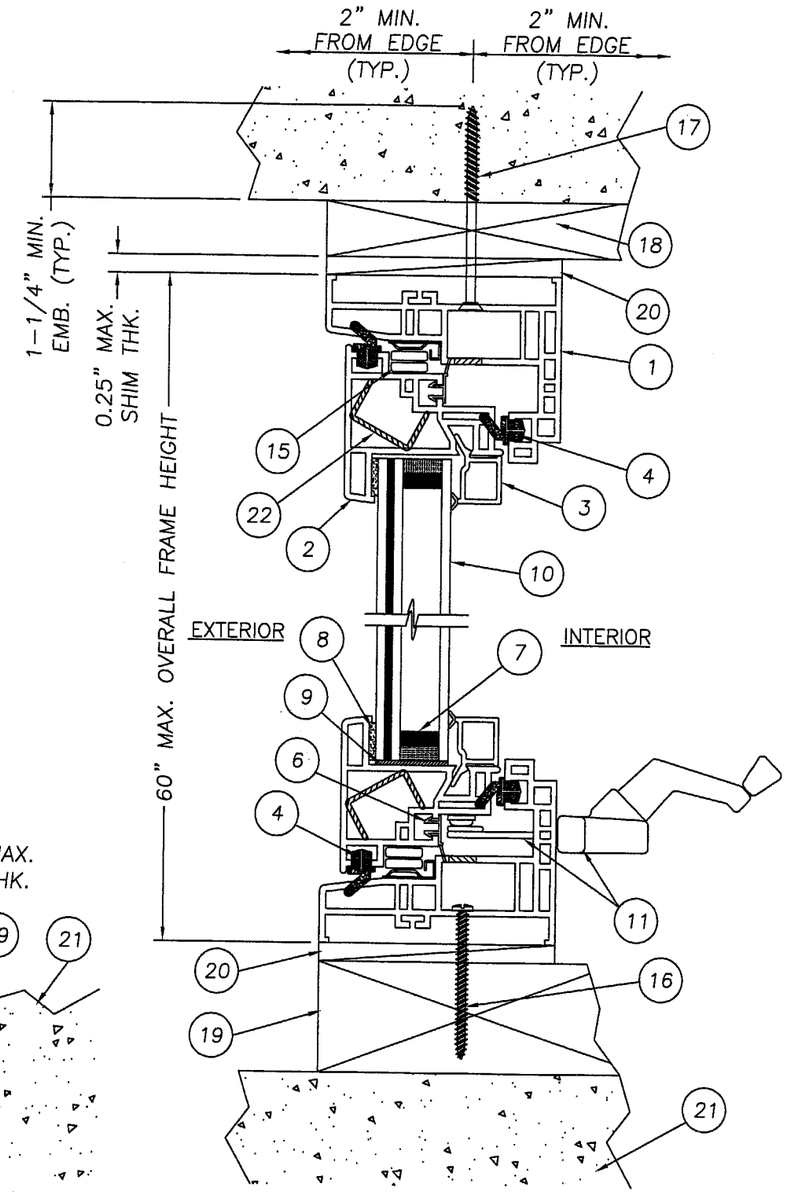

Approved as complying with the Florida Building Code
Date MAY 5, 2005
NOA# 05-0107.03
Miami Dade Product Control Division
By Manuel Perez

Documents Prepared By:
RW BUILDING CONSULTANTS, INC.
P.O. Box 230 Valrico FL. 33595
Phone No.: 813.659.9197
Florida Board of Professional Engineers
Certificate Of Authorization No. 9813
Wendell W. Haney, P.E. NO. 54158
4/13/05

PRODUCT:
VINYL CASEMENT WINDOW "IMP" CORONA, SUPREMA PLUS & INSUL-SASH SINGLE UNITS

PART OR ASSEMBLY:
VERTICAL & HORIZONTAL CROSS SECTIONS

REVISIONS

NO.	DATE		BY
2	4/13/05	ADD EXTRUDER TO B.O.M.	RW
1	3/12/05	PER DADE COMMENTS	RW

DATE: 11/01/04
SCALE: N.T.S.
DWG. BY: EW
CHK. BY: WWH
DRAWING NO.: S-2487
SHEET 2 OF 4

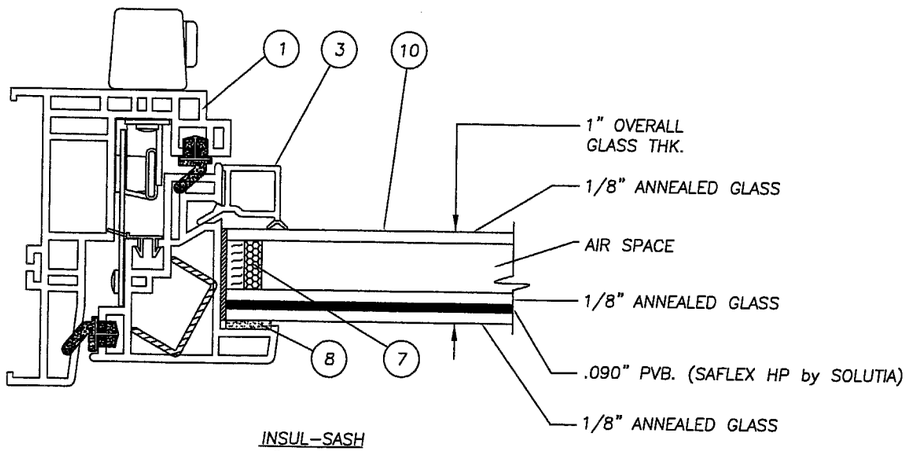

(10) INSUL-SASH 1" THICK GLASS GLAZING DETAIL

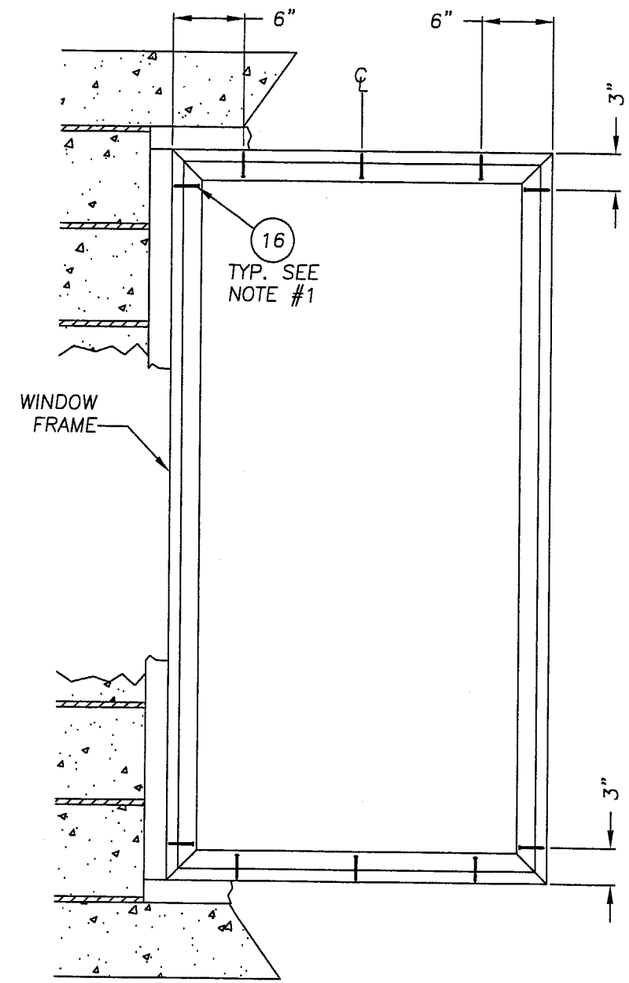

WINDOW FRAME TO BUCK FOR WINDOW ANCHORING

NOTES:

1. WHEN ANCHORING WINDOW FRAME UTILIZING A 1X BUCK THEN ITEM #16 IS SUBSTITUTED WITH ITEM #17(3/16" X 2-3/4" TAPCON ANCHOR). THE QUANTITY AND SPACING OF ANCHORS DOES NOT CHANGE.
2. FOR 2X STUD FRAMING CONSTRUCTION, THE ANCHORING OF THESE UNITS SHALL BE THE SAME AS THAT SHOWN FOR 2X BUCK MASONRY CONSTRUCTION.

Approved as complying with the Florida Buiding Code
Date MAY 5, 2005
NOA# 05-0107.03
Miami Dade Product Control Division
By Manuel Perez

Documents Prepared By:
RW BUILDING CONSULTANTS, INC.
P.O. Box 230 Valrico FL. 33595
Phone No.: 813.659.9197
Florida Board of Professional Engineers
Certificate Of Authorization No. 9813
Wendell W. Haney, P.E. No. 54158
4/15/05

PRODUCT: VINYL CASEMENT WINDOW "IMP" CORONA, SUPREMA PLUS & INSUL-SASH SINGLE UNITS

PART OR ASSEMBLY: WINDOW ANCHORING & GLAZING DETAIL

REVISIONS

NO.	DATE		BY
2	4/13/05	ADD EXTRUDER TO B.O.M.	RW
1	3/12/05	PER DADE COMMENTS	RW

DATE: 11/01/04
SCALE: N.T.S.
DWG. BY: EW
CHK. BY: WWH
DRAWING NO.: S-2487
SHEET 3 OF 4

ITEM	DESCRIPTION	MATERIAL
1	MAIN FRAME 3.25" X 2.50" PVC MIN. .070" THK. #P453 * REGAL PLASTICS	VINYL
2	CASE. SASH 2.124" X 2.187" PVC MIN. .050" THK. #P454 * REGAL PLASTICS	VINYL
3	1" GLASS STOP .561" X .656" PVC MIN. .062" THK. #P512 * REGAL PLASTICS	VINYL
4	CASEMENT INNER & OUTER FOAM SEAL #590 BY SCHLEGEL	FOAM
5	NOT USED	–
6	CASEMENT MIDDLE SEAL .615" X .265" PVC .030" WALL #P458 * REGAL PLASTICS	VINYL
7	THERMOPLASTIC GLAZING SPACER	TPS
8	BUTYL GLAZING TAPE .50" X .125"	BUTYL
9	GLAZING SETTING SHIM	–
10	1" INSULATED GLASS (INTER-LAYER BY SOLUTIA) 1/8" ANNEALED – AIR SPACE – 1/8" ANNEALED/ .090"PVB./ 1/8" ANNEALED	GLASS
11	ROTO OPERATOR (TRUTH HARDWARE #15.26)	–
12	MULTI-POINT LOCKING SYSTEM (TRUTH HARDWARE #24)	STEEL
13	KEEPER 2.375" X 1.930 X .070" THK. #31302 BY TRUTH HARDWARE	–
14	SNUBBER E-GARD (TRUTH HARDWARE #10390)	–
15	CONCEALED CASEMENT HINGE (TRUTH HARDWARE #14.96)	–
16	#8 X 2" P.P.H. SHEET METAL SCREW	STEEL
17	3/16" X 2-3/4" TAPCON	STEEL
18	1X BUCK	WOOD
19	2X BUCK	WOOD
20	1/4" MAX. SHIM	WOOD
21	MASONRY	CONC.
22	SASH REINFORCEMENT (6063-T3 ALUM.)	ALUM.

* EXTRUDER MUST BE A CERTIFIED PVC EXTRUSION LICENSEE LISTED ON THE CURRENT AAMA PVC EXTRUSION CERTIFICATION PROGRAM LISTING.

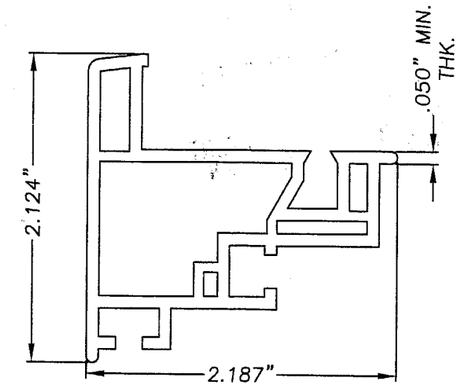

(2) AWNING SASH
EXTRUDED VINYL

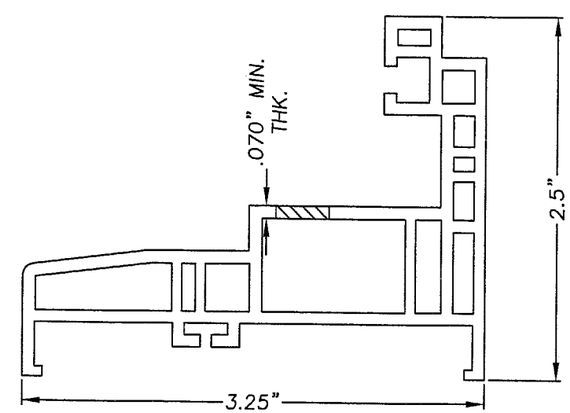

(1) MAIN FRAME
EXTRUDED VINYL

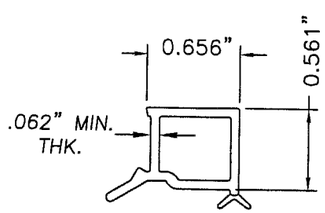

(3) 1" GLASS STOP
EXTRUDED VINYL

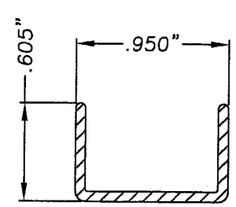

(22) AWNING SASH REINFORCEMENT
ALUMINUM

Approved as complying with the Florida Building Code
Date MAY 5, 2005
NOA# 05-0107.03
Miami Dade Product Control Division
By Manuel Perez

Documents Prepared By:
RW BUILDING CONSULTANTS, INC.
P.O. Box 230 Valrico FL. 33595
Phone No.: 813.659.9197
Florida Board of Professional Engineers
Certificate Of Authorization No. 9813
Wendell W. Haney, P.E. No. 54158
4/13/05

PRODUCT: VINYL CASEMENT WINDOW "IMP" CORONA, SUPREMA PLUS & INSUL-SASH SINGLE UNITS
PART OR ASSEMBLY: BILL OF MATERIALS & COMPONENTS

NO.	DATE	REVISIONS	BY
2	4/13/05	ADD EXTRUDER TO B.O.M.	RW
1	3/12/05	PER DADE COMMENTS	RW

DATE: 11/01/04
SCALE: N.T.S.
DWG. BY: EW
CHK. BY: WWH
DRAWING NO.: S-2487
SHEET 4 OF 4