MIAMI-DADE COUNTY, FLORIDA

BUILDING CODE COMPLIANCE OFFICE (BCCO)
PRODUCT CONTROL DIVISION

METRO-DADE FLAGLER BUILDING
140 WEST FLAGLER STREET, SUITE 1603
MIAMI, FLORIDA 33130-1563
(305) 375-2901 FAX (305) 375-2908
www.buildingcodeonline.com

NOTICE OF ACCEPTANCE (NOA)

La Finestra
7620 N.W. 25 Street, Unit 6
Miami, FL 33166

SCOPE:

This NOA is being issued under the applicable rules and regulations governing the use of construction materials. The documentation submitted has been reviewed by Miami-Dade County Product Control Division and accepted by the Board of Rules and Appeals (BORA) to be used in Miami Dade County and other areas where allowed by the Authority Having Jurisdiction (AHJ).

This NOA shall not be valid after the expiration date stated below. The Miami-Dade County Product Control Division (In Miami Dade County) and/or the AHJ (in areas other than Miami Dade County) reserve the right to have this product or material tested for quality assurance purposes. If this product or material fails to perform in the accepted manner, the manufacturer will incur the expense of such testing and the AHJ may immediately revoke, modify, or suspend the use of such product or material within their jurisdiction. BORA reserves the right to revoke this acceptance, if it is determined by Miami-Dade County Product Control Division that this product or material fails to meet the requirements of the applicable building code.
This product is approved as described herein, and has been designed to comply with the Florida Building Code, including the High Velocity Hurricane Zone.

DESCRIPTION: Series "EKU-53" Outswing Aluminum Casement Window - Impact

APPROVAL DOCUMENT: Drawing No. **LAFINWDWOUT,** titled "Series EKU-53 Outswing Casement Window", sheets 1 through 5 of 5, dated 10/26/04 with revision #2 dated 5/16/05, prepared by Bromley-Cook Engineering, Inc., signed and sealed by William D. Cook, P.E., bearing the Miami-Dade County Product Control Revision stamp with the Notice of Acceptance number and expiration date by the Miami-Dade County Product Control Division.

MISSILE IMPACT RATING: Large and Small Missile Impact Resistant

LABELING: Each unit shall bear a permanent label with the manufacturer's name or logo, city, state and following statement: "Miami-Dade County Product Control Approved", unless otherwise noted herein.

RENEWAL of this NOA shall be considered after a renewal application has been filed and there has been no change in the applicable building code negatively affecting the performance of this product.

TERMINATION of this NOA will occur after the expiration date or if there has been a revision or change in the materials, use, and/or manufacture of the product or process. Misuse of this NOA as an endorsement of any product, for sales, advertising or any other purposes shall automatically terminate this NOA. Failure to comply with any section of this NOA shall be cause for termination and removal of NOA.

ADVERTISEMENT: The NOA number preceded by the words Miami-Dade County, Florida, and followed by the expiration date may be displayed in advertising literature. If any portion of the NOA is displayed, then it shall be done in its entirety.

INSPECTION: A copy of this entire NOA shall be provided to the user by the manufacturer or its distributors and shall be available for inspection at the job site at the request of the Building Official.
This NOA **revises NOA # 02-1016.06** consists of this page 1 and evidence pages E-1 and E-2, as well as approval document mentioned above.
The submitted documentation was reviewed by **Manuel Perez, P.E.**

La Finestra

NOTICE OF ACCEPTANCE: EVIDENCE SUBMITTED

A. DRAWINGS

1. Manufacturer's die drawings and sections.
2. Drawing No. **LAFINWDWOUT,** titled "Series EKU-53 Outswing Casement Window", sheets 1 through 5 of 5, dated 10/26/04 with revision #2 dated 5/16/05, prepared by Bromley-Cook Engineering, Inc., signed and sealed by William D. Cook, P.E.

B. TESTS

1. Test reports on 1) Air Infiltration Test, per FBC, TAS 202-94
   2) Uniform Static Air Pressure Test, Loading per FBC,TAS 202-94
   3) Water Resistance Test, per FBC, TAS 202-94
   4) Forced Entry Test, per FBC 2411 3.2.1 and TAS 202-94

   along with marked-up drawings and installation diagram of an outswing wood door, prepared by Hurricane Test Laboratory, Inc., Test Report No. **FTL-3881,** dated August 23, 2004, witnessed by Edmundo Largaespada, P.E.
2. Test reports on 1) Air Infiltration Test, per FBC, TAS 202-94
   2) Uniform Static Air Pressure Test, Loading per FBC,TAS 202-94
   3) Water Resistance Test, per FBC, TAS 202-94
   4) Forced Entry Test, per FBC 2411 3.2.1 and TAS 202-94

   along with marked-up drawings and installation diagram of an outswing wood door, prepared by Hurricane Test Laboratory, Inc., Test Report No. **FTL-3480,** dated July 29, 2002, witnessed by James G. Worth, P.E. and reviewed, signed and sealed by Joseph Chan, P.E. ***(Submitted under File #02-1016.06)***

C. CALCULATIONS

1. Anchor Calculations and structural analysis, dated 01/27/05, prepared by Bromley-Cook Engineering, Inc., signed and sealed by William D. Cook, P.E.
   Complies with ASTM E1300 -98
   No 1/3 stress increase used in anchors into masonry or steel substrate.
2. Anchor Calculations and structural analysis, dated 10/10/02 revised on 11/20/02, prepared by Bromley-Cook Engineering, Inc., signed and sealed by William D. Cook, P.E. ***(Submitted under File #02-1016.06)***

D. QUALITY ASSURANCE

1. Miami Dade Building Code Compliance Office (BCCO).

Manuel Perez, P.E.
Product Control Examiner
NOA No 05-0203.02
Expiration Date: February 27, 2008
Approval Date: June 23, 2005

NOTICE OF ACCEPTANCE: EVIDENCE SUBMITTED

E. MATERIAL CERTIFICATIONS

1. Notice of Acceptance No. **01-0205.02** issued to Solutia Inc. for their "Saflex /Keepsafe Maximum" dated 05/17/01, expiring on 05/21/06.
2. Notice of Acceptance No. **99-0302.04** issued to UCB Chemicals Corporation for their "Uvekol – Liq. Resin to adhere Glass" dated 02/08/01, expiring on 02/08/04.

F. STATEMENTS

1. Statement letter of conformance, dated January 27, 2005, signed and sealed by William D. Cook, P.E.
2. Statement letter of no financial interest, dated January 27, 2005, signed and sealed by William D. Cook, P.E.
3. Laboratory compliance letter for Test Report No. **FTL- 3881**, issued by Fenestration Testing Laboratory, Inc., dated October 18, 2004, signed and sealed by Edmundo Largaespada, P.E.

G. OTHER

1. Notice of Acceptance No. **02-1016.06**, issued to **La Finestra** for their "Series "EKU-53" Outswing Aluminum Casement Window – Impact", approved on 02/27/03 and expiring on 02/27/08.

Manuel Perez, P.E.
Product Control Examiner
NOA No 05-0203.02
Expiration Date: February 27, 2008
Approval Date: June 23, 2005

LA FINESTRA, LC SERIES: EKU 53 OUTSWING CASEMENT WINDOW

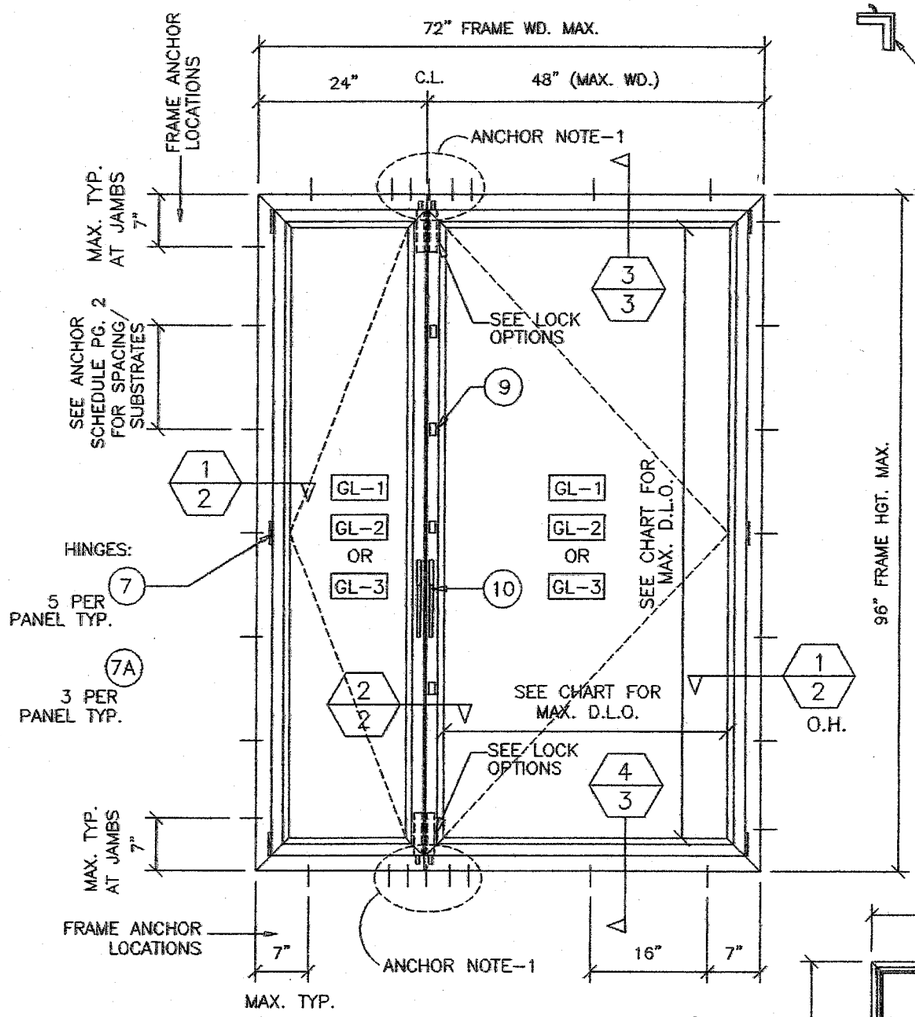

TYPICAL ELEVATION

VIEWED FROM EXTERIOR
"OUT SWING "

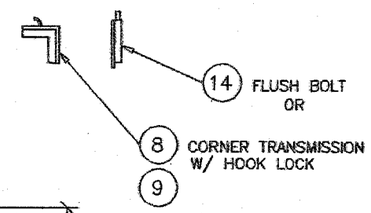

LOCK OPTIONS

ANCHOR NOTE-1

AT C.L. MEETING STILES:

INTO WOOD SUBSTRATE:
CLUSTER OF (5) #14 WOOD SCREWS @ 2" O/C
MAX. SPACING INTO WOOD SUBSTRATE
MIN. EMBED 1 1/2"

INTO STEEL OR CONC. SUBSTRATE:
CLUSTER OF (3) 1/4" DIA. SMS OR TAP-CONS
@ 3" O.C. MAX. SPACING

GLASS SCHEDULE

LARGE MISSILE IMPACT RESISTANT

GL-1 = 1/2"(.500") LAMINATED
3/16" ANNEALED - .130"
UVEKOL LIQUID RESIN COMPOSITE
3/16" ANNEALED.

GL-2 = 7/16"(.450") LAMINATED
3/16" ANN. - .090" P.V.B.
INTERLAYER(SAFLEX/KEEPSAFE MAXIMUM)-
3/16" ANNEALED.

GL-3 = 7/16"(.450") LAMINATED
3/16" H.S. - .090" P.V.B.
INTERLAYER(SAFLEX/KEEPSAFE MAXIMUM)-
3/16" H.S.

GLASS CHART

TYPE	MAX. D.L.O.	MAX. DESIGN PRESSURE
GL-1	27 1/2" X 86 11/16"	+75.0, -75.0 P.S.F.
GL-2	27 1/2" X 86 11/16"	+75.0, -75.0 P.S.F.
GL-3	40 3/4" X 86 11/16"	+90.0, -90.0 P.S.F.

WATER INFILTRATION TEST PRESSURE = 13.5 P.S.F.

NOTES:

1. THIS WINDOW SYSTEM HAS BEEN TESTED, ENGINEERED AND APPROVED FOR DESIGN PRESSURES NOT TO EXCEED THOSE SHOWN IN SCHEDULE.
2. BUCK, OPENINGS & BUCK FASTENERS MUST BE DESIGNED & INSTALLED TO WITHSTAND WIND LOADS FOR EACH APPLICATION
3. BUCK FASTENERS MAY NOT EXCEED 16" O.C. SPACING AROUND OPENINGS.
4. THE SYSTEM SHOWN HEREIN WAS TESTED FOR WATER, AIR, IMPACT, CYCLIC & UNIFORM STATIC AIR PRESSURE TESTING IN CONFORMANCE WITH DADE COUNTY PROTOCOLS PA-201, 202 & 203.

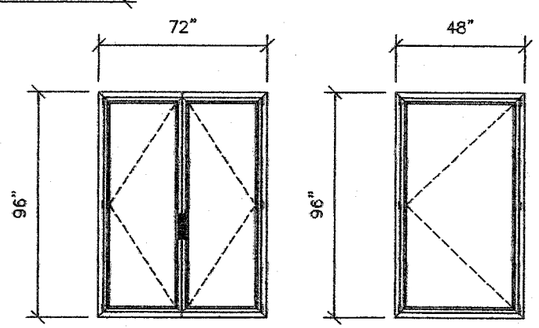

TYPICAL CONFIGURATIONS

MAX. WINDOW SIZES SIZES

MULTIPLE UNITS STACKED VERTICALLY OR HORIZONTALLY MUST HAVE APPROVED MULLIONS BETWEEN EACH WINDOW

PRODUCT REVISED
as complying with the Florida Building Code
Acceptance No. 05-0203.02
Expiration Date FEB 27, 2008
By Manuel Perez
Miami-Dade Product Control Division

NO.	REVISION DESCRIPTION	BY	DATE
1	REVISIONS PER NEW PRODUCT TESTING	M.G.	1/14/05
2	REVISIONS PER B.C.C.O.	M.G.	5/16/05

TITLE: SERIES EKU-53 OUTSWING CASEMENT WINDOW

MANUFACTURER: LA FINESTRA, L.C.
7620 N.W. 25TH STREET
MIAMI, FLORIDA 33166
(PH.) 305-599-8093

BROMLEY - COOK ENGINEERING, INC.
STRUCTURAL ENGINEERING SERVICES
6440 N.W. 33RD AVENUE SUITE 100
FORT LAUDERDALE, FL 33309
PH.(954) 772-4624 FAX(954) 772-4634

CERTIFICATION
MAY 2 0 2005
WILLIAM D. COOK, P.E.
FLA. P.E. NO. 43904

DATE: 10-26-04
DRAWING NO: LAFINWDWOUT
SHEET NO: 1 OF 5

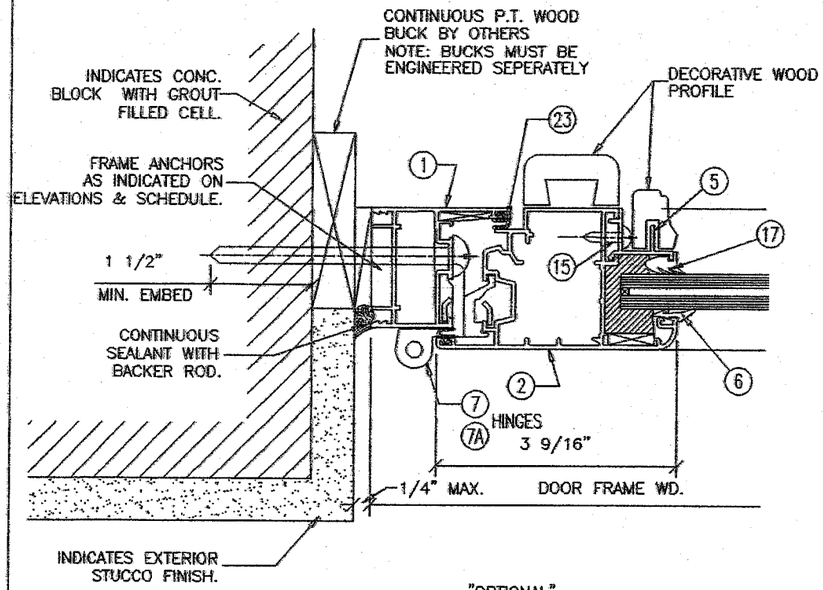

1/2 "OPTIONAL" JAMB DETAIL WITH DECORATIVE WOOD

ANCHOR SCHEDULE

ANCHOR TYPE	SUBSTRATE	MAXIMUM ALLOWABLE ANCHOR SPACING HEAD – SILL	MAXIMUM ALLOWABLE ANCHOR SPACING JAMBS
1/4" X REQ'D. LENGTH TAPCON OR EQUAL 1 1/2" MIN. EMBED INTO CONC.	CONCRETE (2000 PSI MIN.) CBS (GROUT FILLED)	7" FROM ENDS BALANCE @ 16" C/C MAX.	7" FROM ENDS BALANCE @ 20 1/2" C/C MAX.
#14 X REQ'D. LENGTH P.H.S.M.S. OR SELF-DRILLING	METAL STRUCTURES A-36 STEEL OR ALUMINUM 1/8" MIN. THICKNESS	7" FROM ENDS BALANCE @ 16" C/C MAX.	7" FROM ENDS BALANCE @ 20 1/2" C/C MAX.
#14 X REQ'D LENGTH P.H.S.M.S. OR #14 WOOD SCREWS 1 1/2" MIN. EMBED INTO WOOD	WOOD FRAMING NO.2 S.Y.P.	7" FROM ENDS BALANCE @ 16" C/C MAX.	7" FROM ENDS BALANCE @ 14" C/C MAX.

NOTE: SEE ANCHOR NOTE-1 FOR CLUSTER OF ANCHORS REQ'D AT MEETING STILES

ANCHOR NOTE-1

AT C.L. MEETING STILES:
CLUSTER OF (5) #14 WOOD SCREWS @ 2" O/C MAX. SPACING INTO WOOD SUBSTRATE MIN. EMBED 1 1/2" INTO WOOD OR
CLUSTER OF (3) 1/4" DIA. SMS OR TAP-CONS @ 3" O.C. MAX. SPACING INTO STEEL OR CONCRETE SUBSTRATE. (SEE ANCHOR SCHEDULE)

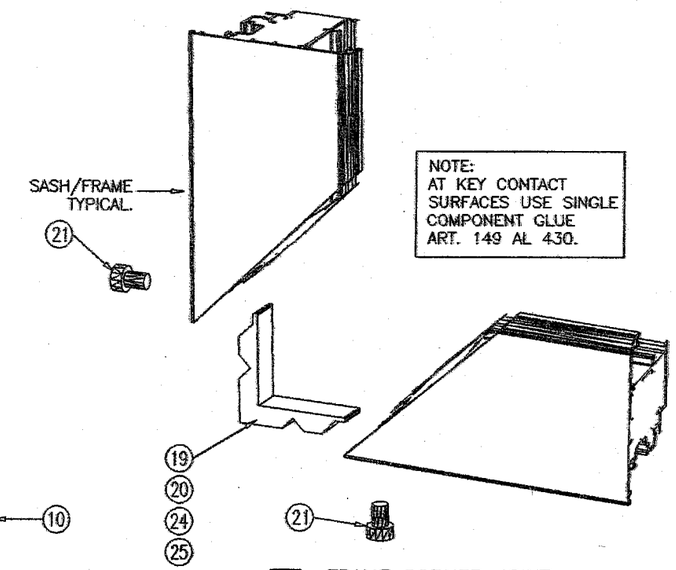

NOTE:
AT KEY CONTACT SURFACES USE SINGLE COMPONENT GLUE ART. 149 AL 430.

5/2 FRAME CORNER JOINT

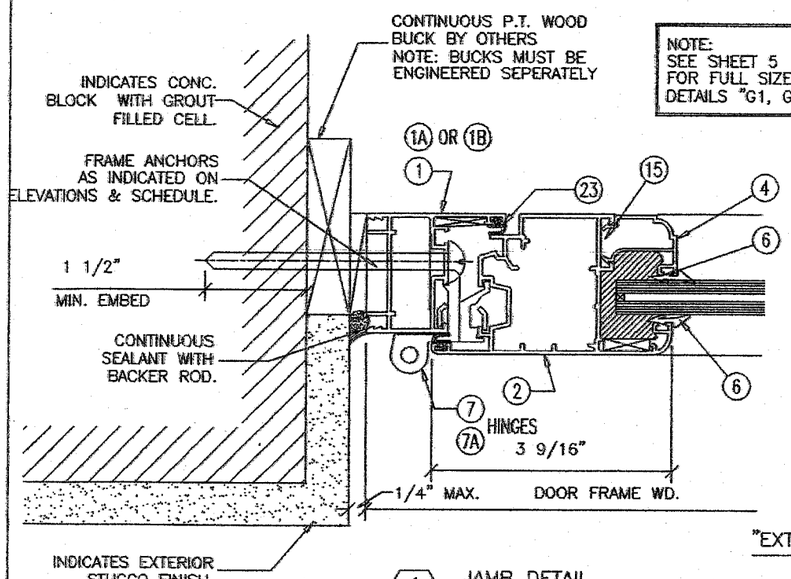

NOTE:
SEE SHEET 5 FOR FULL SIZE GLAZING DETAILS "G1, G2" OR "G/3"

"EXTERIOR"

1/2 JAMB DETAIL "SWING OUT"

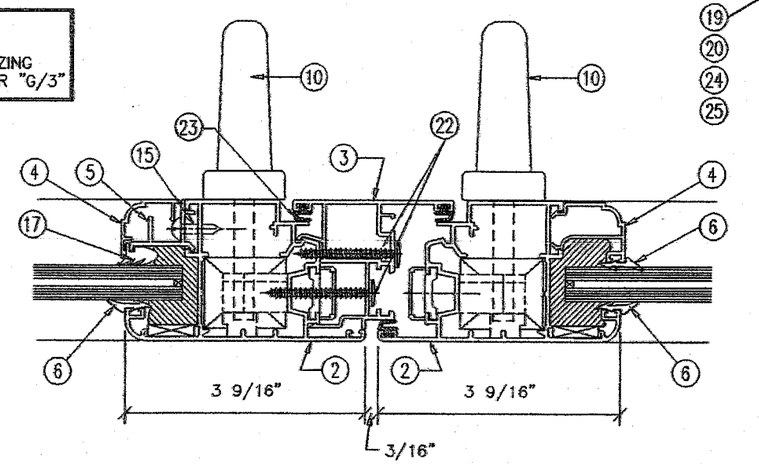

2/2 MEETING STILES "SWING OUT"

PRODUCT REVISED
as complying with the Florida Building Code
Acceptance No. 05-0203.02
Expiration Date FEB. 27, 2008
By Manuel Sevy
Miami-Dade Product Control Division

NO.	REVISION DESCRIPTION	BY	DATE
1	REVISIONS PER NEW PRODUCT TESTING	M.G.	1/14/05
2	REVISIONS PER B.C.O.	M.G.	5/16/05

TITLE: DETAILS – CASEMENT WINDOW

MANUFACTURER: LA FINESTRA, L.C.
7620 N.W. 25TH STREET
MIAMI, FLORIDA 33166
(PH.) 305-599-8093

BROMLEY – COOK ENGINEERING, INC.
STRUCTURAL ENGINEERING SERVICES
5440 N.W. 33RD AVENUE SUITE 100
FORT LAUDERDALE, FL 33309
PH.(954) 772-4624 FAX(954) 772-4634

CERTIFICATION
MAY 20 2005
WILLIAM D. COOK, P.E.
FLA. P.E. NO. 43904

DATE: 9-28-02
DRAWING NO: LAFINWDWOUT
SHEET NO: 2 OF 5

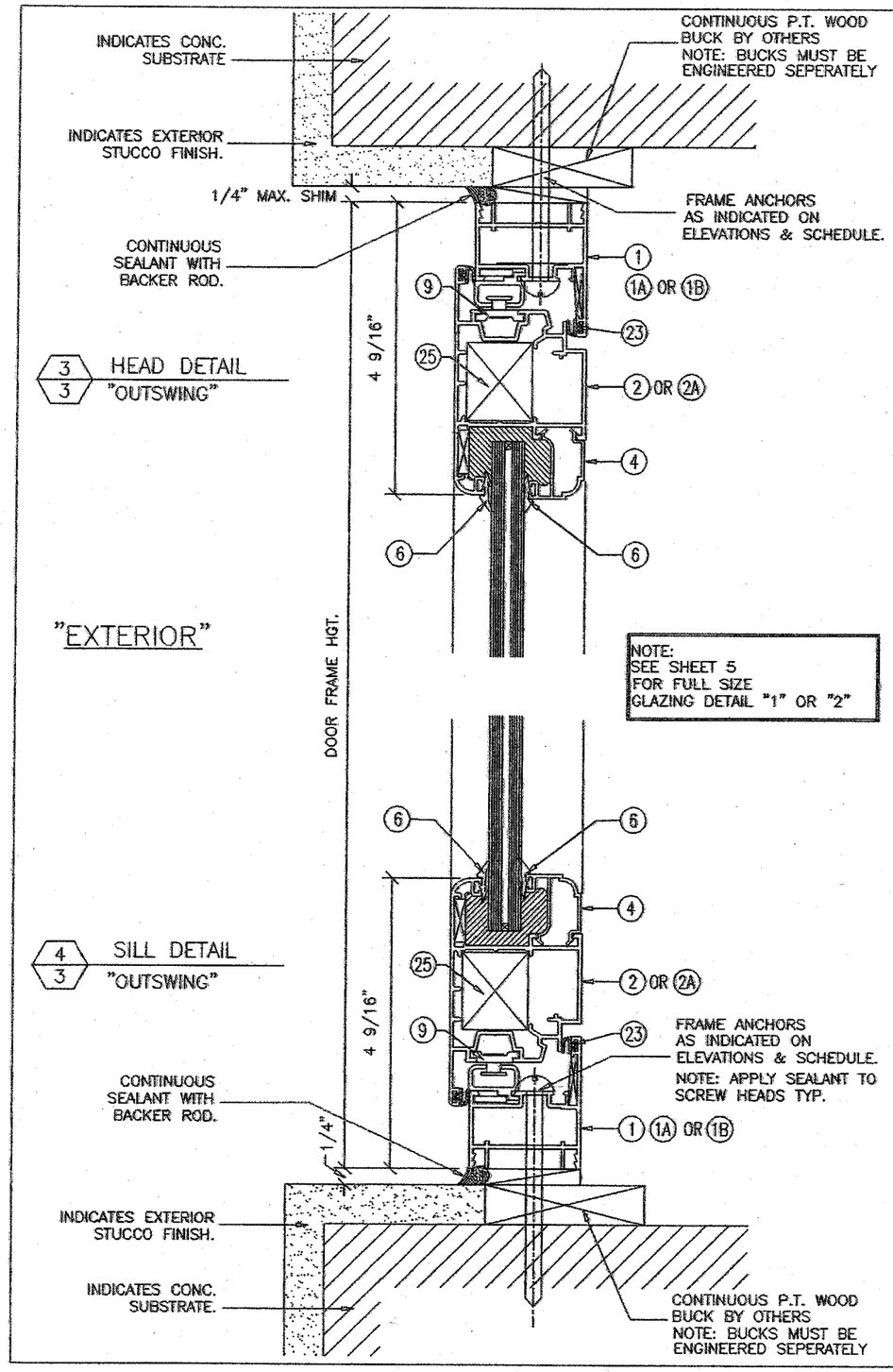

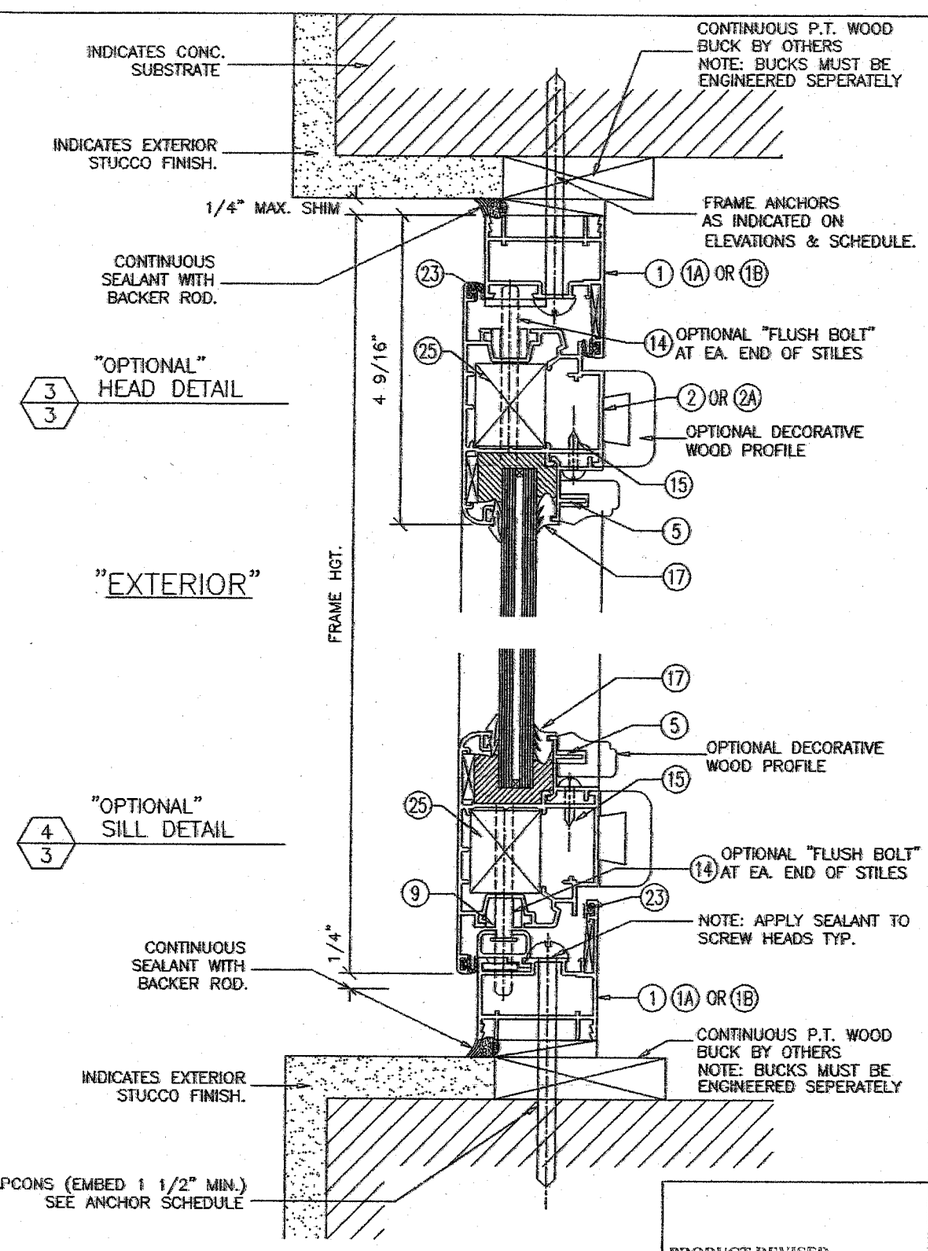

PRODUCT REVISED
as complying with the Florida Building Code
Acceptance No 05-0203.02
Expiration Date FEB. 27, 2008
By Manuel Perez
Miami-Dade Product Control Division

NO.	REVISION DESCRIPTION	BY	DATE
1	REVISIONS PER NEW PRODUCT TESTING	M.G.	1/14/05
2	REVISIONS PER B.C.C.O.	M.G.	5/16/05

TITLE: DETAILS – CASEMENT WINDOWS

MANUFACTURER: LA FINESTRA, L.C.
7620 N.W. 25TH STREET
MIAMI, FLORIDA 33166
(PH.) 305-599-8093

BROMLEY – COOK ENGINEERING, INC.
STRUCTURAL ENGINEERING SERVICES
5440 N.W. 33RD AVENUE SUITE 100
FORT LAUDERDALE, FL 33309
PH.(954) 772-4624 FAX(954) 772-4634

CERTIFICATION
MAY 20 2005
WILLIAM D. COOK, P.E.
FLA. P.E. NO. 43904

DATE: 9-28-02
DRAWING NO: LAFINDROUT
SHEET NO: 3 OF 5

7011 – FRAME (1)

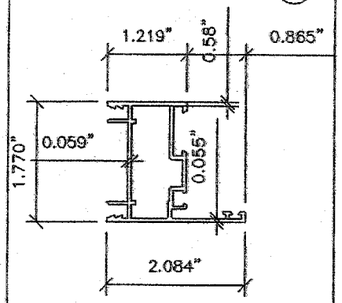

11054–SASH(OUTSWING) (2)

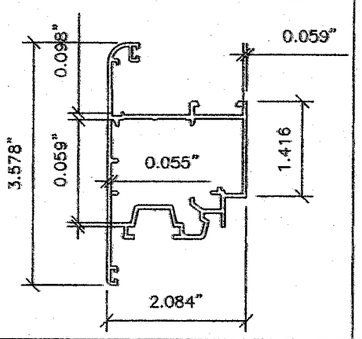

4263 – CENTRAL RABBET (3)

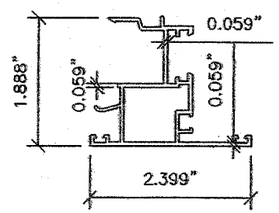

(4) 11202 – GLAZING BEAD

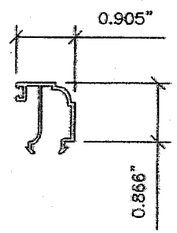

11000 – GLAZING BEAD (5)

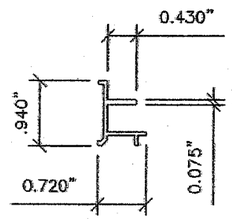

9035 – OVERSIZE FRAME (1A)

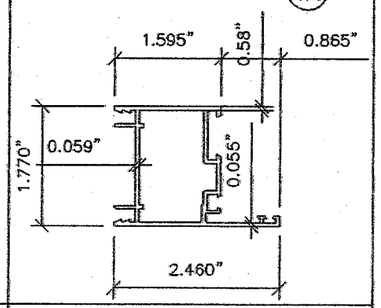

9036– OVERSIZE FRAME WITH FLANGE (1B)

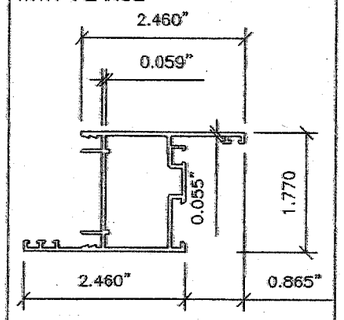

11028–SASH(OUTSWING) (2A)

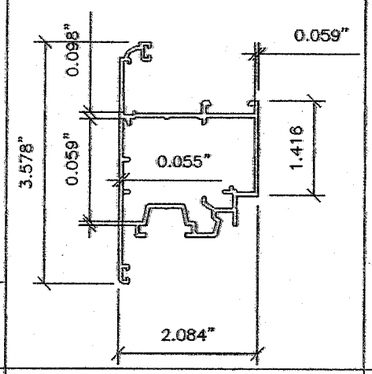

MATERIAL LIST

KEY	PART NUMBER	QUANTITY	DESCRIPTION	MATERIAL	MANUF./SUPPLIER/REMARKS
1	7011	AS REQD.	FRAME MEMBER	EN AW-6060 – T5	PROFILATI SpA
1A	9035	AS REQD.	FRAME MEMBER (OPTIONAL)	EN AW-6060 – T5	PROFILATI SpA
1B	9036	AS REQD.	FRAME MEMBER (OPTIONAL)	EN AW-6060 – T5	PROFILATI SpA
2	11054	AS REQD.	SASH HEAD/SILL/JAMB	EN AW-6060 – T5	PROFILATI SpA
2A	11028	AS REQD.	SASH HEAD/SILL/JAMB (OPTIONAL)	EN AW-6060 – T5	PROFILATI SpA
3	4263	AS REQD.	CENTRAL RABBET	EN AW-6060 – T5	PROFILATI SpA
4	11202	AS REQD.	GLAZING BEAD	EN AW-6060 – T5	PROFILATI SpA
5	11000	AS REQD.	GLAZING BEAD	EN AW-6060 – T5	PROFILATI SpA
6	G1	AS REQD.	CONTINUOUS EPDM WEDGE GASKET	EPDM	
7	100-120X	10	3 5/8" LG. TWO-PEICE BUTT HINGE	EN AW-6060 – T5	GSG
7A	100-XL	6	5 1/2" LG. ONE-PEICE BUTT HINGE	EN AW-6060 – T5	GSG
8	B	4	SUPPPLEMENTARY TRANSMISSION ANGLE	ZAMA GS500	GSG
9	C	12	SUPPLEMENTARY HOOK LOCK	ZAMA GS500	GSG
10	D	2	OPERATING HANDLE	ALUMINUM	GU
11	1025	1	TRANSMISSION MOVEMENT	ZAMA S.S.	GSG
12	POS 12-13	1	MULTIPLE POINT LOCK	ZINC IRON S.S.	AGB
13			NOT USED		
14	AGB		FLUSH BOLT	ZINC IRON S.S.	AGB-GIESSE
15	GSF1	AS NOTED	#10 X 1 1/4" P.H.M.S.(SELF DRILLING)	CAD. PLATED STEEL	STD. SCREWS FOR GLAZING BEAD
16					
17	G2	AS REQD.	CONTINUOUS EPDM WEDGE GASKET	EPDM	
18	N/A				
19	105-0110	1 EA. CORNER	FRAME CORNER KEY(LOWER CORNERS)	CAST ALUMINUM	PROFILATI SpA
20	105-0409	1 EA. CORNER	FRAME CORNER KEY(UPPER CORNERS)	CAST ALUMINUM	PROFILATI SpA
21	110-3578	2 EA. CORNER	.325" DIA. METALLIC PIN	CAST ALUMINUM	PROFILATI SpA
22		6	#8 SMS INSTALLED IN STAGGERED PAIRS	CAST ALUMINUM	
23	2666	AS REQD.	VINYL GASKET		
24	164-0426	1 EA. CORNER	FRAME CORNER KEY	CAST ALUMINUM	PROFILATI SpA
25	164-0426	1 EA. CORNER	FRAME CORNER KEY	CAST ALUMINUM	PROFILATI SpA

SEALANTS

- GLAZING BEAD AT FRAME SILL SEALED TO GLASS WITH DOW CORNING 995 OR PECORA 895
- FRAME CORNERS SEALED WITH DOW CORNING 999

PRODUCT REVISED
as complying with the Florida
Building Code
Acceptance No. 05-0203.02
Expiration Date FEB. 27, 2008
By Manuel Perez
Miami-Dade Product Control
Division

NO.	REVISION DESCRIPTION	BY	DATE
1	REVISIONS PER NEW PRODUCT TESTING	M.G.	1/14/05
2	REVISIONS PER B.C.C.O.	M.G.	5/18/05

TITLE: DETAILS – CASEMENT WINDOWS

MANUFACTURER: LA FINESTRA, L.C.
7620 N.W. 25TH STREET
MIAMI, FLORIDA 33166
(PH.) 305-599-8093

BROMLEY – COOK ENGINEERING, INC.
STRUCTURAL ENGINEERING SERVICES
5440 N.W. 33RD AVENUE SUITE 100
FORT LAUDERDALE, FL 33309
PH.(954) 772-4624 FAX(954) 772-4634

CERTIFICATION
MAY 20 2005
WILLIAM D. COOK, P.E.
FLA. P.E. NO. 43904

DATE: 9-28-02
DRAWING NO: LAFINWDWOUT
SHEET NO: 4 OF 5

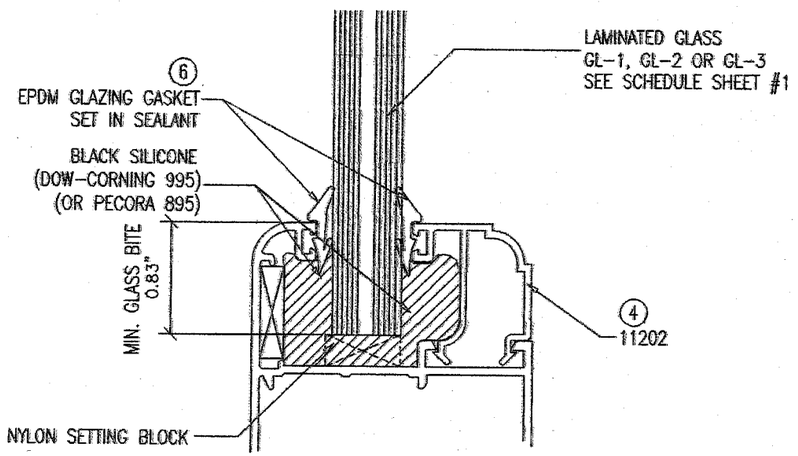

1/5 GLAZING DETAIL
"FULL SIZE"

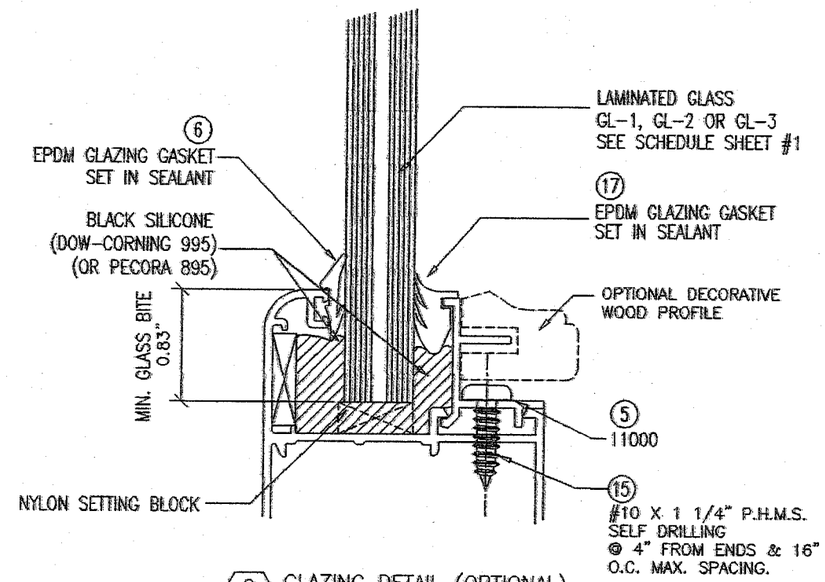

2/5 GLAZING DETAIL (OPTIONAL)
"FULL SIZE"

PRODUCT REVISED
as complying with the Florida
Building Code
Acceptance No. 05-0203.02
Expiration Date FEB. 27, 2008
By Manuel Perez
Miami Dade Product Control
Division

NO.	REVISION DESCRIPTION	BY	DATE
1	REVISIONS PER NEW PRODUCT TESTING	M.G.	1/14/05
2	REVISIONS PER B.C.C.O.	M.G.	5/16/05

TITLE: DETAILS - CASEMENT WINDOWS

MANUFACTURER: LA FINESTRA, L.C.
7620 N.W. 25TH STREET
MIAMI, FLORIDA 33166
(PH.) 305-599-8093

BROMLEY - COOK ENGINEERING, INC.
STRUCTURAL ENGINEERING SERVICES
5440 N.W. 33RD AVENUE SUITE 100
FORT LAUDERDALE, FL 33309
PH.(954) 772-4624 FAX(954) 772-4634

CERTIFICATION
MAY 2 0 2005
WILLIAM D. COOK, P.E.
FLA. P.E. NO. 43904

DATE: 9-28-02
DRAWING NO: LAFINWDWOUT
SHEET NO: 5 OF 5