MIAMI-DADE COUNTY

BUILDING CODE COMPLIANCE OFFICE (BCCO)
PRODUCT CONTROL DIVISION

MIAMI-DADE COUNTY, FLORIDA
METRO-DADE FLAGLER BUILDING
140 WEST FLAGLER STREET, SUITE 1603
MIAMI, FLORIDA 33130-1563
(305) 375-2901 FAX (305) 375-2908

NOTICE OF ACCEPTANCE (NOA)

Comdinavalle CIA. LTDA.
Av. Occidental N. 61-24 Y F. Alfaro
Quito, Ecuador

SCOPE:

This NOA is being issued under the applicable rules and regulations governing the use of construction materials. The documentation submitted has been reviewed by Miami-Dade County Product Control Division and accepted by the Board of Rules and Appeals (BORA) to be used in Miami Dade County and other areas where allowed by the Authority Having Jurisdiction (AHJ).

This NOA shall not be valid after the expiration date stated below. The Miami-Dade County Product Control Division (In Miami Dade County) and/or the AHJ (in areas other than Miami Dade County) reserve the right to have this product or material tested for quality assurance purposes. If this product or material fails to perform in the accepted manner, the manufacturer will incur the expense of such testing and the AHJ may immediately revoke, modify, or suspend the use of such product or material within their jurisdiction. BORA reserves the right to revoke this acceptance, if it is determined by Miami-Dade County Product Control Division that this product or material fails to meet the requirements of the applicable building code.

This product is approved as described herein, and has been designed to comply with the Florida Building Code, including the High Velocity Hurricane Zone.

DESCRIPTION: Outswing Glazed Wood Doors w/ wo Sidelite and w/ wo Transom

APPROVAL DOCUMENT: Drawing No. **04-135**, titled "Non-Impact Double & Single Outswing Wood Doors w/ Glass Panel, Transom & Sidelites", sheets 1 through 10 of 10, dated 10/13/04 and last revised on April 07, 2005, prepared by the Tilteco Inc., signed and sealed by Walter A. Tillit Jr., P.E., bearing the Miami-Dade County Product Control Approval stamp with the Notice of Acceptance number and approval date by the Miami-Dade County Product Control Division.

MISSILE IMPACT RATING: None. Hurricane Protection devices complying w/FBC, per applicable zone, are required

LABELING: Each unit shall bear a permanent label with **Comdinavalle, Quito, Ecuador** and following statement: "Miami-Dade County Product Control Approved", unless otherwise noted herein.

RENEWAL of this NOA shall be considered after a renewal application has been filed and there has been no change in the applicable building code negatively affecting the performance of this product.

TERMINATION of this NOA will occur after the expiration date or if there has been a revision or change in the materials, use, and/or manufacture of the product or process. Misuse of this NOA as an endorsement of any product, for sales, advertising or any other purposes shall automatically terminate this NOA. Failure to comply with any section of this NOA shall be cause for termination and removal of NOA.

ADVERTISEMENT: The NOA number preceded by the words Miami-Dade County, Florida, and followed by the expiration date may be displayed in advertising literature. If any portion of the NOA is displayed, then it shall be done in its entirety.

INSPECTION: A copy of this entire NOA shall be provided to the user by the manufacturer or its distributors and shall be available for inspection at the job site at the request of the Building Official.
This NOA consists of this page 1 and evidence pages E-1, as well as approval document mentioned above.
The submitted documentation was reviewed by **Ishaq I. Chanda, P.E.**

PRODUCT CONTROL ACCEPTED

NOA No 05-0203.05
Expiration Date: May 19, 2010
Approval Date: May 19, 2005

4/26/15

Comdinavalle CIA. LTDA

NOTICE OF ACCEPTANCE: EVIDENCE SUBMITTED

A. DRAWINGS

1. Manufacturer's die drawings and sections.
2. Drawing No. **04-135**, titled "Non-Impact Double & Single Outswing Wood Doors w/ Glass Panel, Transom & Sidelites", sheets 1 through 10 of 10, dated 10/13/04 and last revised on April 07, 2005, prepared by the Tilteco Inc., signed and sealed by Walter A. Tillit Jr., P.E.

B. TESTS

1. Test reports on 1) Air Infiltration Test, per FBC, TAS 202-94
   2) Uniform Static Air Pressure Test, Loading per FBC, TAS 202-94
   3) Water Resistance Test, per FBC, TAS 202-94
   4) Forced Entry Test, per FBC 2411 3.2.1 and TAS 202-94

   Along with marked-up drawings and installation diagrams, issued by Fenestration Testing laboratory, for outswing door w/ sidelite: test report No. **FTL-4170** dated 11/18/04, outswing double doors: test report No **FTL-4281** dated 11/19/04, Outswing arch double doors: test report No. **FTL-4279** dated 11/19/04 and outswing double door w/ transom test report No **FTL-4304** dated 11/19/04, all signed and sealed by Edmundo Largaespada, P.E.
   (Note: These test reports have been revised by addendum letters dated April 05, 2005, issued by Fenestration Testing laboratory, signed and sealed by Edmundo Largaespada, P.E.)

C. CALCULATIONS

1. Anchor verification calculations and structural analysis, prepared by Tilteco, Inc., dated 01/31/05 and revised on 04/07/05, signed and sealed by Walter A. Tillit Jr., P.E.

D. QUALITY ASSURANCE

1. Miami Dade Building Code Compliance Office (BCCO).

E. MATERIAL CERTIFICATIONS

1. None

F. STATEMENTS

1. Statement letter of conformance and "No financial interest" dated 01/28/05, signed and sealed by Walter A. Tillit Jr., P.E.
2. Laboratory compliance letter, as part of the above test reports.

G. OTHER

1. Letter from the consultant stating that the product is in compliance with the Florida Building Code (FBC).
2. Test proposal approved by BCCO dated 11/25/2003.
3. Distribution Agreement dated Sep 9, 2005 between Comdinavalle, Quito, Ecuador and EcuaValley Distributor Inc, Miami, Fl. (dba Miami Valley Doors).
4. Other associated file with this NOA #05-0203.04

Ishaq I. Chanda

Ishaq I. Chanda, P.E.
Product Control Examiner
NOA No 05-0203.05
Expiration Date: May 19, 2010
Approval Date: May 19, 2005

GENERAL NOTES AND SPECIFICATIONS:

1. FENESTRATIONS SHOWN ON THIS PRODUCT APPROVAL DOCUMENT (P. A. D.) HAVE BEEN VERIFIED FOR COMPLIANCE IN ACCORDANCE WITH THE 2001 EDITION OF THE FLORIDA BUILDING CODE.
FENESTRATIONS MAY BE INSTALLED AT HIGH VELOCITY HURRICANE ZONES.
DESIGN WIND LOADS SHALL BE DETERMINED AS PER SECTION 1619 OF THE ABOVE MENTIONED CODE. IN ORDER TO VERIFY THAT ANCHORS ON THIS P.A.D., AS TESTED, WERE **NOT** OVER STRESSED, A 33% INCREASE IN ALLOWABLE STRESS FOR WIND LOADS WAS **NOT** USED IN THEIR ANALYSIS.
THESE FENESTRATION'S ADEQUACY FOR IMPACT AND CYCLIC RESISTANCE HAS BEEN VERIFIED IN ACCORDANCE WITH SECTION 1606.1.4 OF THE ABOVE MENTIONED CODE AS PER TAS-202, AS PER LAB REPORTS No. 4170, 4279, 4281 AND 4304 AS PER SUBMITTED STRUCTURAL CALCULATIONS, PERFORMED AS PER SECTION 1611 OF THE FLORIDA BUILDING CODE.

2. **MAXIMUM DESIGN PRESSURE RATING +65.0 psf. -65.0 psf. WITH EXTENSION FLUSH BOLTS AND ONE SIDED DEAD BOLTS.**

3. THESE FENESTRATIONS ARE APPROVED FOR AIR/WATER INFILTRATION.

4. ALL WOOD PROFILES SHALL BE MAHOGANY WITH MEDIUM VOLUMETRIC MASS AT NORMAL HUMIDITY 520 kg/M^3.

5. DOOR ASSEMBLIES WITH TRAMSOM OR SIDELITES MUST INCLUDE HORIZONTAL AND VERTICAL MULLIONS INDICATED ON THIS DRAWING OR MIAMI-DADE COUNTY APPROVED CLIPPED MULLION (STEEL OR ALUMINUM) W/ MINIMUM 1/8" THICKNESS (OPTIONAL). MULLIONS ARE REQUIRED BUT ARE NOT PROVIDED BY THIS DOOR MANUFACTURER.

6. WOOD BUCKS BY OTHERS, MUST BE ANCHORED PROPERLY TO TRANSFER LOADS TO THE BUILDING STRUCTURE. WOOD BUCKS MUST HAVE A MINIMUM SPECIFIC DENSITY (G) OF 0.55.
WOOD BUCKS MUST SUSTAIN LOADS IMPOSED BY FENESTRATIONS AND TRANSFER THEM TO THE BUILDING STRUCTURE AND TO BE REVIEWED BY BUILDING OFFICIAL.

7. ALL FRAME MEMBERS SHALL BE ANCHORED TO EXISTING STRUCTURE FOLLOWING SPECS INDICATED ON SHEETS 2, 3 & 4 AS APPLICABLE.

8. **THESE FENESTRATIONS WILL REQUIRE A HURRICANE PROTECTION DEVICE.**

9. REMAINING COMPONENTS FOR THESE FENESTRATIONS SYSTEMS SHALL BE AS INDICATED ON BILL OF MATERIALS, SHEET 5 OF THIS DRAWING.

10. FENESTRATION'S MANUFACTURER LABEL SHALL BE PLACED ON A READILY VISIBLE LOCATION. ONE LABEL SHALL BE PLACED FOR EVERY OPENING. LABEL SHALL READ AS FOLLOWS:
ECUAVALLEY DISTRIBUTORS, INC. d/b/a MIAMI VALLEY DOORS
MIAMI, FLORIDA
MIAMI-DADE COUNTY PRODUCT CONTROL APPROVED.

11. FENESTRATIONS INSTALLATION SHALL COMPLY WITH SPECS INDICATED IN THIS DRAWING PLUS ANY BUILDING AND ZONING REGULATIONS PROVIDED BY THE JURISDICTION WHERE PERMIT IS APPLIED TO.

12. ALL FENESTRATIONS COMPONENT EDGES WHICH REMAIN IN CONTINUOUS CONTACT WITH THE BUILDING SHALL BE SEAL/CAULK TO PREVENT WIND/RAIN INTRUSION. CAULK AND SEAL ALL AROUND FULL LENGTH.

13. (a) THIS P.A.D. PREPARED BY THIS ENGINEER IS GENERIC AND DOES NOT PROVIDE INFORMATION FOR A SITE SPECIFIC PROJECT; i.e. WHERE THE SITE CONDITIONS DEVIATE FROM THE P.A.D.

(b) CONTRACTOR TO BE RESPONSIBLE FOR THE SELECTION, PURCHASE AND INSTALLATION INCLUDING LIFE SAFETY OF THIS PRODUCT, BASED ON THIS P.A.D., PROVIDED HE/SHE DOES NOT DEVIATE FROM THE CONDITIONS DETAILED ON THIS DOCUMENT. CONSTRUCTION SAFETY AT SITE IS THE CONTRACTOR'S RESPONSIBILITY.

(c) THIS P.A.D. WILL BE CONSIDERED INVALID IF ALTERED BY ANY MEANS.

(d) SITE SPECIFIC PROJECTS SHALL BE PREPARED BY A FLORIDA REGISTERED ENGINEER OR ARCHITECT WHICH WILL BECOME THE ENGINEER OF RECORD (P.O.R.) FOR THE PROJECT AND WHO WILL BE RESPONSIBLE FOR THE PROPER USE OF THE P.A.D. ENGINEER OF RECORD, ACTING AS A DELEGATED ENGINEER TO THE P.A.D. ENGINEER SHALL SUBMIT TO THIS LATTER THE SITE SPECIFIC DRAWINGS FOR REVIEW IN ADDITION TO A MANDATORY SUBMITTAL TO MIAMI DADE COUNTY BUILDING CODE COMPLIANCE OFFICE FOR EITHER A PRODUCT APPROVAL REVISION OR A ONE TIME APPROVAL.

(e) ORIGINAL P.A.D. SHALL BEAR THE DATE, SEAL AND SIGNATURE OF THE PROFESSIONAL ENGINEER OF RECORD THAT PREPARED IT.

APR 07 2005

Approved as complying with the Florida Building Code
Date MAY 19, 2005
NOA# 05-0203.05
Miami Dade Product Control Division
By Shaq J. Chanda

F.B.C. (H.V.H.Z.) / MIAMI-DADE COUNTY

TILTECO INC.
TILLIT TESTING & ENGINEERING COMPANY
6355 N.W. 36th. St., Ste. 305, VIRGINIA GARDENS, Fl. 33166
Phone : (305)871-1530 , Fax : (305)871-1531
e-mail: tilteco@aol.com
EB-0006719
WALTER A. TILLIT Jr. P. E.
FLORIDA Lic. # 44167

NON IMPACT DOUBLE & SINGLE OUTSWING WOOD DOORS W/ GLASS PANEL, TRANSOM & SIDELITES

ECUAVALLEY DISTRIBUTORS, INC. d/b/a MIAMI VALLEY DOORS
12913 S.W. 133 CT.
MIAMI, FL 33186

MANUFACTURER:
COMDINAVALLE CIA. LTDA.
AV. OCCIDENTAL N. 61-124 Y F. ALFARO
QUITO-ECUADOR

REV. No	DESCRIPTION	DATE	REV. No	DESCRIPTION	DATE
1	GENERAL	3/30/05	3		
2			4		

AS SHOWN
SCALE

10/13/04
DATE

04-135
DRAWING No

SHEET 1 OF 10

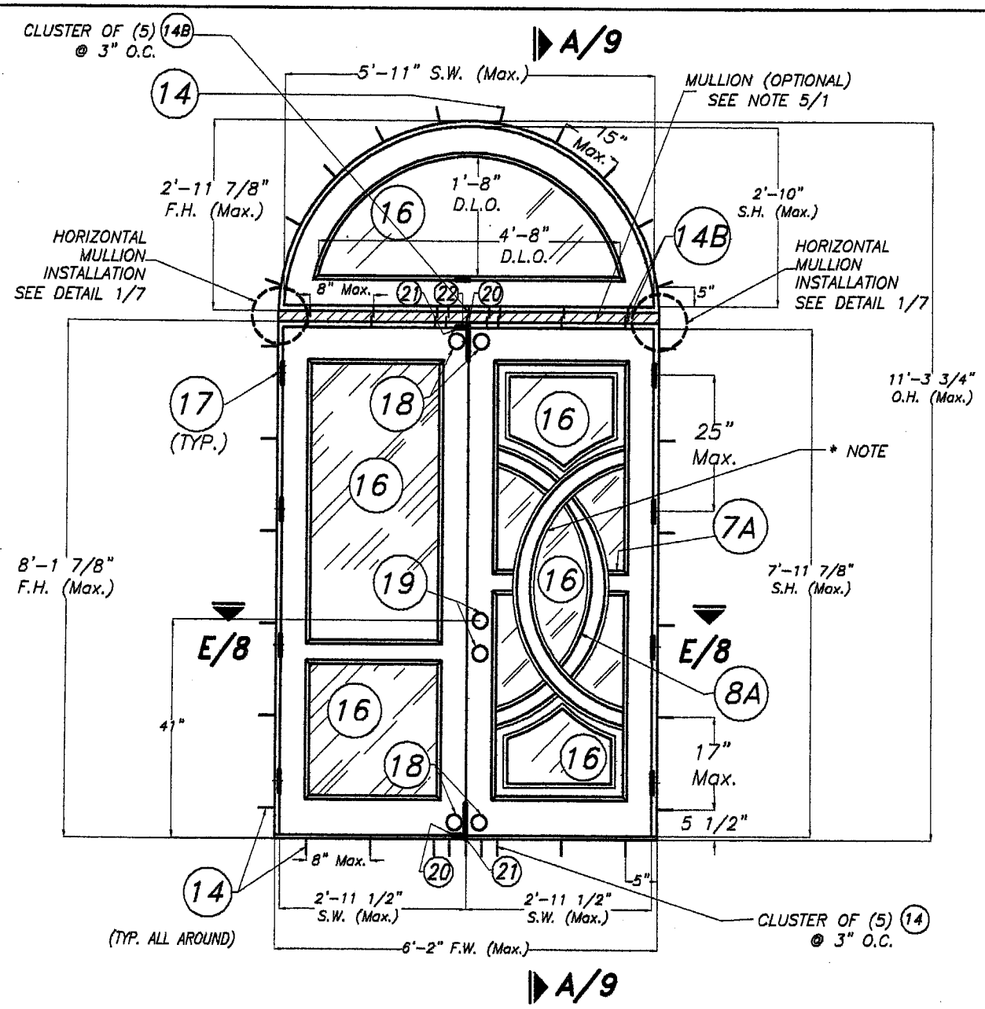

ROUND ARCH DOOR + TRANSOM

(O/XX)

DESIGN PRESSURE RATING: DOUBLE DOORS WITH (4) ONE SIDED DEAD BOLTS 18 + (2) EXTENSION FLUSH BOLTS 20 AT INACTIVE DOOR, W/ TRANSOM.	
POSITIVE	65 psf
NEGATIVE	65 psf

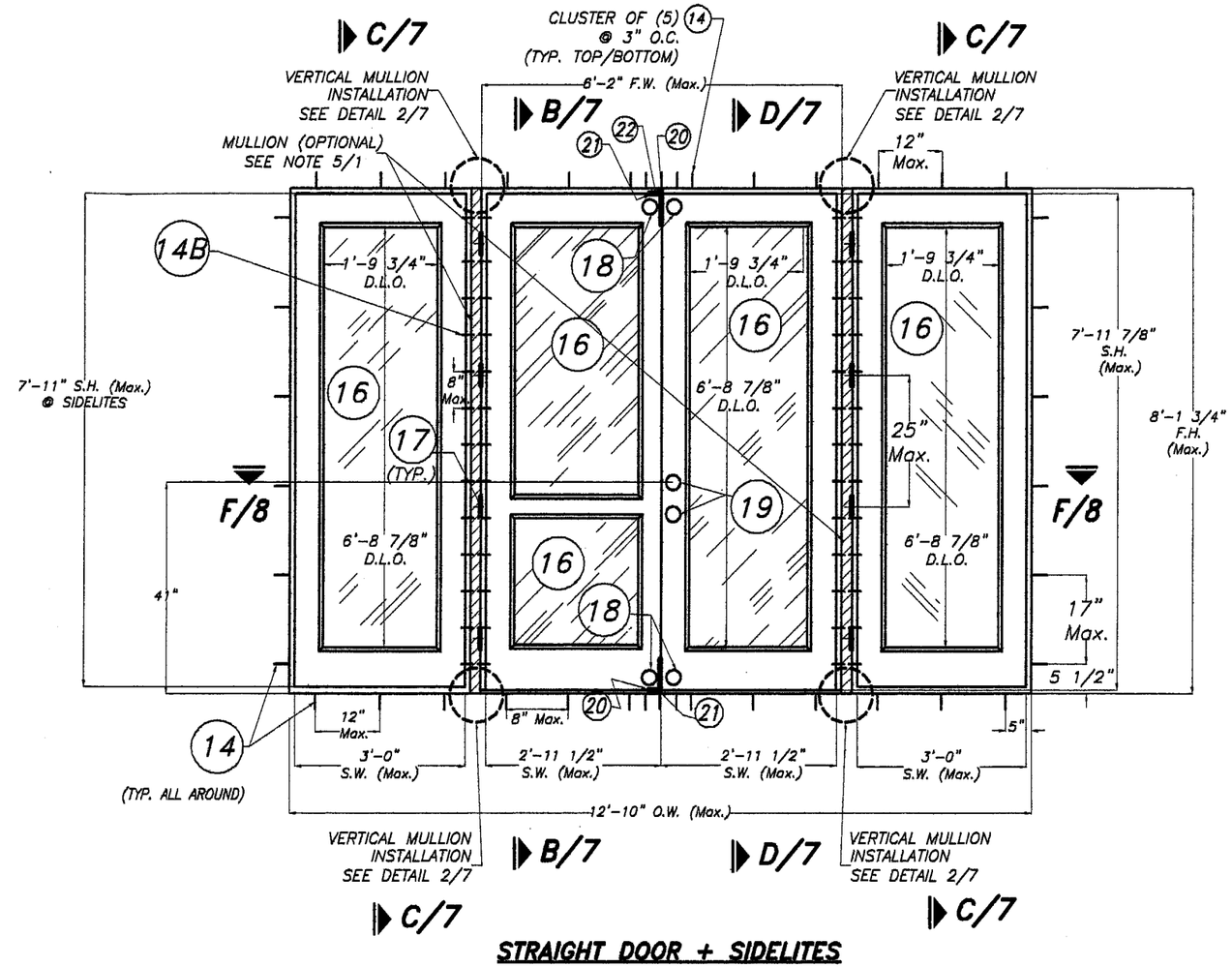

STRAIGHT DOOR + SIDELITES

(OXXO)

DESIGN PRESSURE RATING: DOUBLE DOORS WITH (4) ONE SIDED DEAD BOLTS 18 + (2) EXTENSION FLUSH BOLTS 20 AT INACTIVE DOOR, W/ TRANSOM.	
POSITIVE	65 psf
NEGATIVE	65 psf

• APPROVED SHUTTERS COMPLYING WITH H.V.H.Z., F.B.C. ARE REQUIRED FOR INSTALLATION OF THESE UNITS.

INTERIOR ELEVATIONS: (OUTSWING DOORS)

N.T.S.

Approved as complying with the Florida Building Code
Date MAY 19, 2005
NOA# 05-0203.05
Miami Dade Product Control Division
By Shaq I. Chanda

PREFIX LEGEND:

- F.W. : FRAME WIDTH
- F.H. : FRAME HEIGHT
- S.W. : SASH WIDTH
- S.H. : SASH HEIGHT
- O.W. : OVERALL WIDTH
- O.H. : OVERALL HEIGHT
- D.L.O. : DAYLIGHT OPENING
- P.F.H. : PARTIAL FRAME HEIGHT

*NOTE:

ARRANGEMENT OF STRAIGHT OR CURVED RAILS AT DOOR SASH MAY VARY. HOWEVER, STRAIGHT RAILS SHALL ALWAYS BE COMPONENT 7A AND CURVED RAILS SHALL ALWAYS BE COMPONENT 8A. CONNECTION OF RAILS TO SASH FRAME SHALL BE AS INDICATED ON SHEET 10. ARRANGEMENT MAY BE PERFORMED AT ALL DOOR TYPE OR CONFIGURATION INCLUDED ON THIS DRAWING.

APR 07 2005

F.B.C. (H.V.H.Z.) / MIAMI-DADE COUNTY

TILTECO INC.
TILLIT TESTING & ENGINEERING COMPANY
6355 N.W. 36th. St., Ste. 305, VIRGINIA GARDENS, FL 33166
Phone : (305)871-1530 . Fax : (305)871-1531
e-mail: tilteco@aol.com
EB-0006719
WALTER A. TILLIT Jr. P. E.
FLORIDA Lic. # 44167

NON IMPACT DOUBLE & SINGLE OUTSWING WOOD DOORS W/ GLASS PANEL, TRANSOM & SIDELITES

AS SHOWN SCALE

ECUAVALLEY DISTRIBUTORS, INC. d/b/a MIAMI VALLEY DOORS
12913 S.W. 133 CT.
MIAMI, FL 33186

MANUFACTURER:
COMDINAVALLE CIA. LTDA.
AV. OCCIDENTAL N. 61-124 Y F. ALFARO
QUITO-ECUADOR

10/13/04 DATE

04-135 DRAWING No

REV. No	DESCRIPTION	DATE	REV. No	DESCRIPTION	DATE
1	GENERAL	3/30/05	3		
2			4		

SHEET 2 OF 10

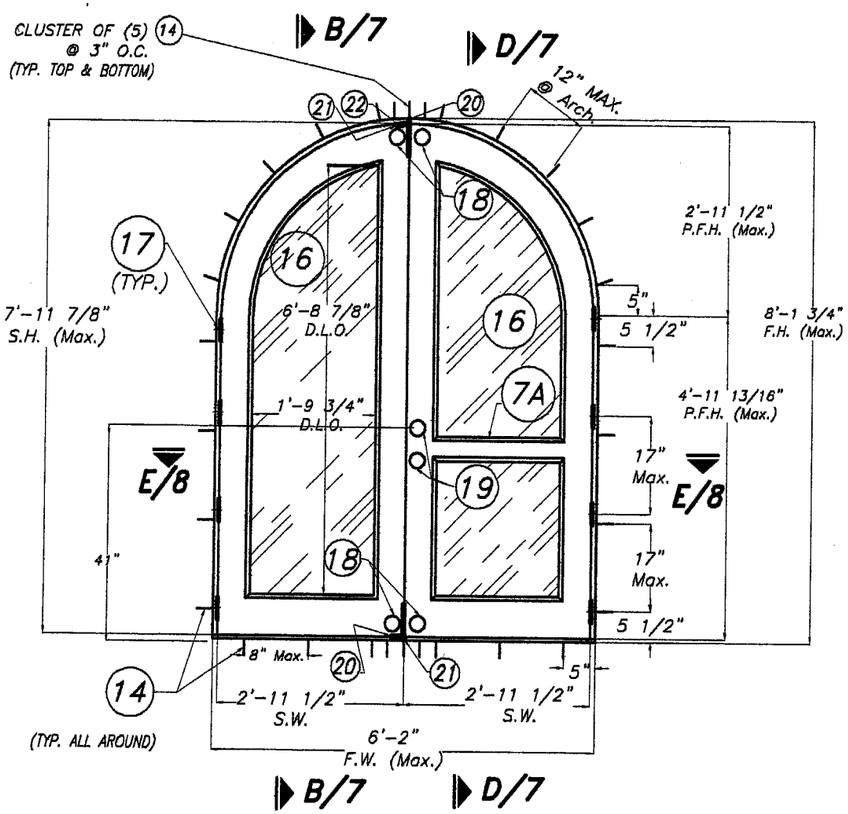

ROUND ARCH DOOR
(XX)

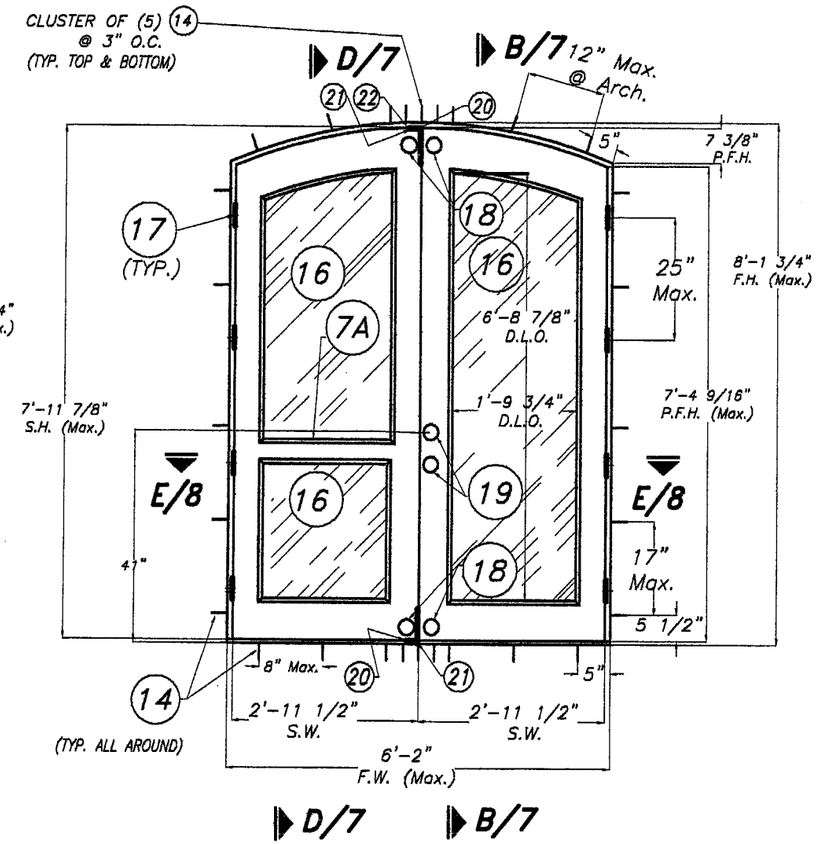

FLAT ARCH DOOR
(XX)

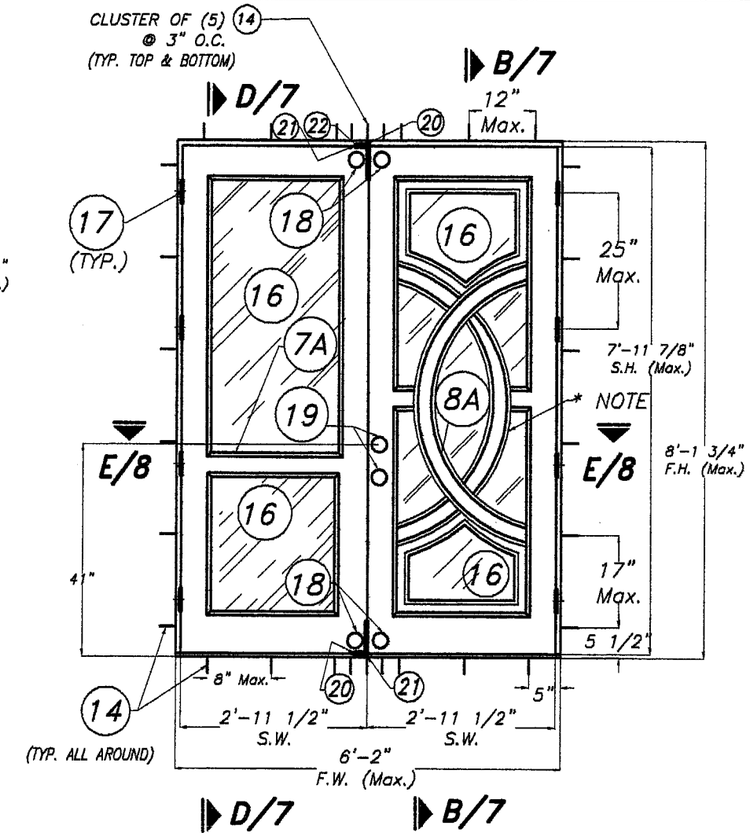

STRAIGHT DOOR
(XX)

PREFIX LEGEND:

- F.W. : FRAME WIDTH
- F.H. : FRAME HEIGHT
- S.W. : SASH WIDTH
- S.H. : SASH HEIGHT
- O.W. : OVERALL WIDTH
- O.H. : OVERALL HEIGHT
- D.L.O. : DAYLIGHT OPENING
- P.F.H. : PARTIAL FRAME HEIGHT

DESIGN PRESSURE RATING: DOUBLE DOORS WITH (4) ONE SIDED DEAD BOLTS (18) + (2) EXTENSION FLUSH BOLTS (20) AT INACTIVE DOOR.	
POSITIVE	65 psf
NEGATIVE	65 psf

• APPROVED SHUTTERS COMPLYING WITH H.V.H.Z., F.B.C. ARE REQUIRED FOR INSTALLATION OF THESE UNITS.

*NOTE:

ARRANGEMENT OF STRAIGHT OR CURVED RAILS AT DOOR SASH MAY VARY. HOWEVER, STRAIGHT RAILS SHALL ALWAYS BE COMPONENT (7A) AND CURVED RAILS SHALL ALWAYS BE COMPONENT (8A). CONNECTION OF RAILS TO SASH FRAME SHALL BE AS INDICATED ON SHEET 10. ARRANGEMENT MAY BE PERFORMED AT ALL DOOR TYPE OR CONFIGURATION INCLUDED ON THIS DRAWING.

INTERIOR ELEVATIONS (OUTSWING DOORS)
N.T.S.

Approved as complying with the Florida Building Code
Date May 19, 2005
NOA# 05-0203.05
Miami Dade Product Control Division
By Shaq I. Chanda

APR 07 2005

F.B.C. (H.V.H.Z.) / MIAMI-DADE COUNTY

TILTECO INC.
TILLIT TESTING & ENGINEERING COMPANY
6355 N.W. 36th. St., Ste. 305, VIRGINIA GARDENS, FL 33166
Phone : (305)871-1530 . Fax : (305)871-1531
e-mail: tilteco@aol.com
EB-0006719
WALTER A. TILLIT Jr. P. E.
FLORIDA Lic. # 44167

NON IMPACT DOUBLE & SINGLE OUTSWING WOOD DOORS W/ GLASS PANEL, TRANSOM & SIDELITES

ECUAVALLEY DISTRIBUTORS, INC. d/b/a MIAMI VALLEY DOORS
12913 S.W. 133 CT.
MIAMI, FL 33186

MANUFACTURER:
COMDINAVALLE CIA. LTDA.
AV. OCCIDENTAL N. 61-124 Y F. ALFARO
QUITO-ECUADOR

REV. No	DESCRIPTION	DATE	REV. No	DESCRIPTION	DATE
1	GENERAL	3/30/05	3		
2			4		

AS SHOWN
SCALE
10/13/04
DATE
04-135
DRAWING No
SHEET 3 OF 10

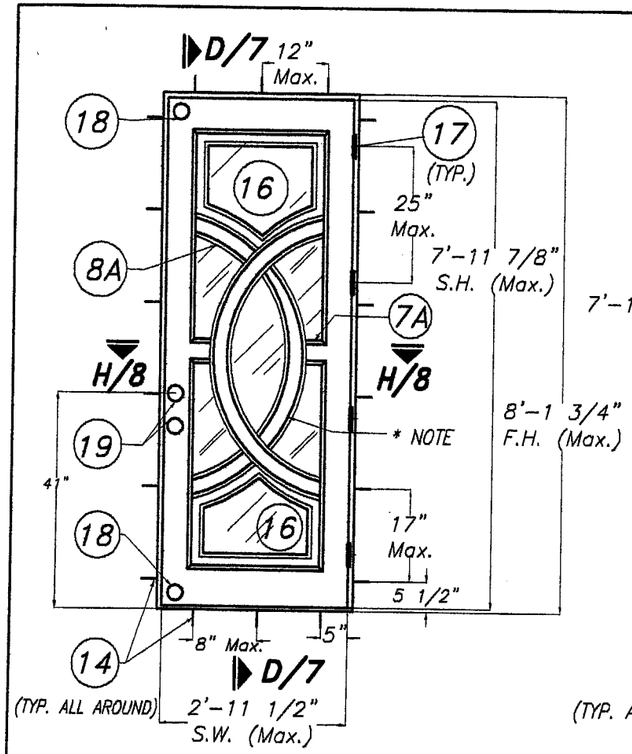

STRAIGHT SINGLE DOOR

(X)

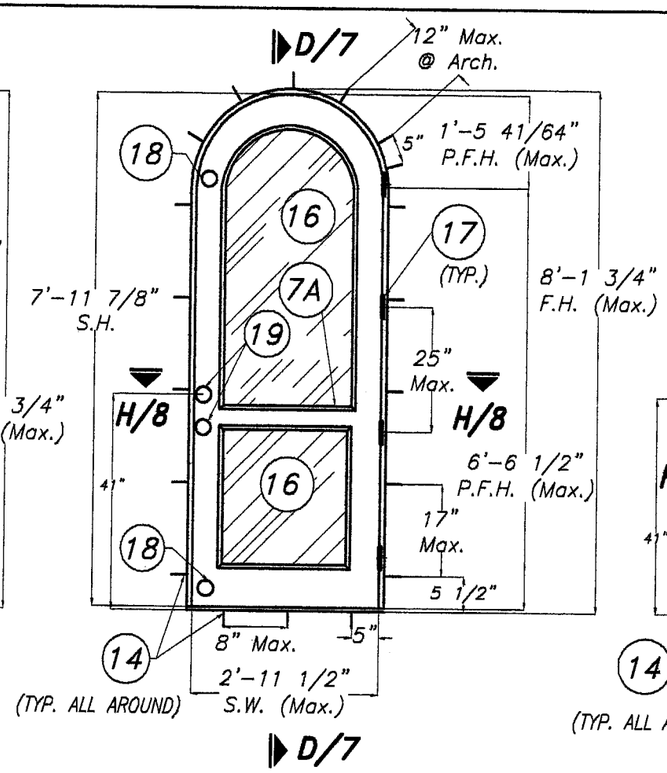

FULL ROUND ARC SINGLE DOOR

(X)

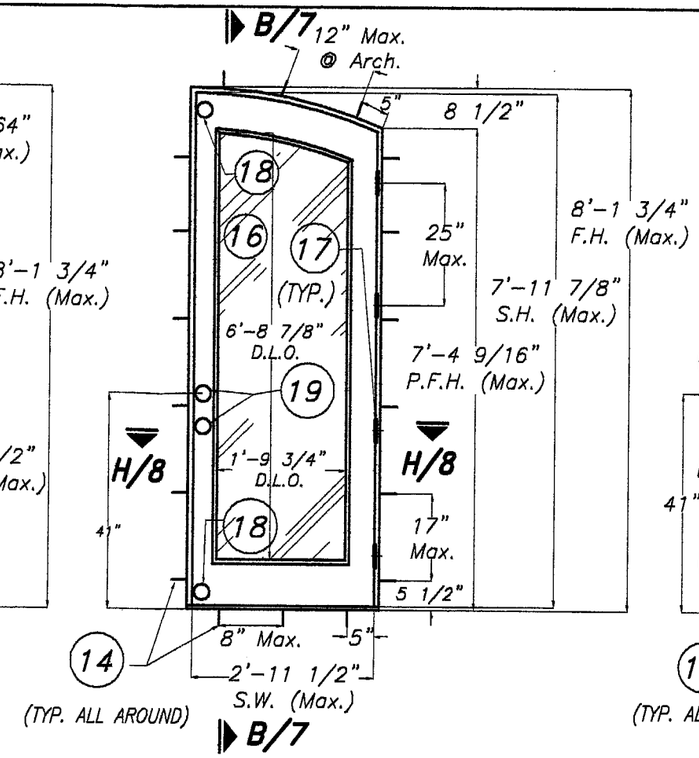

FLAT ARCH SINGLE DOOR

(X)

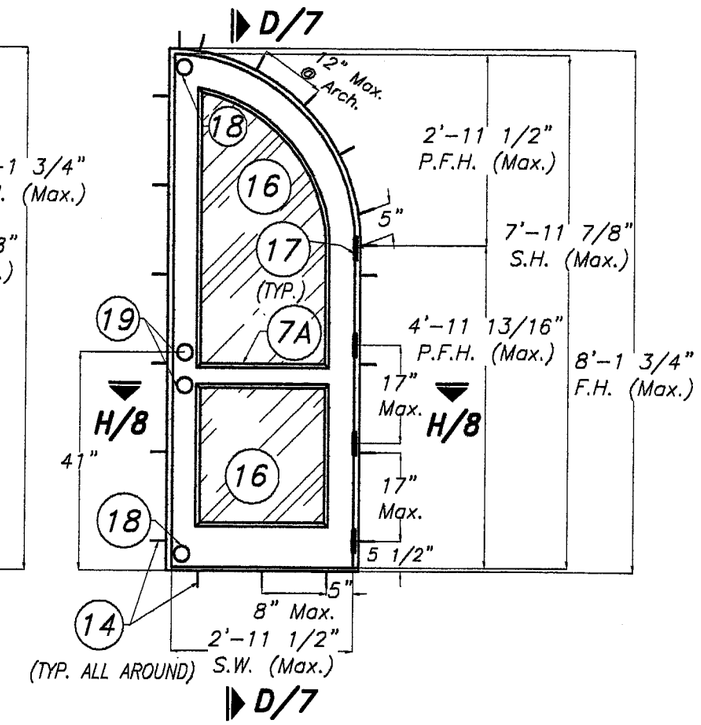

ROUND ARCH SINGLE DOOR

(X)

PREFIX LEGEND:

- F.W. : FRAME WIDTH
- F.H. : FRAME HEIGHT
- S.W. : SASH WIDTH
- S.H. : SASH HEIGHT
- O.W. : OVERALL WIDTH
- O.H. : OVERALL HEIGHT
- D.L.O. : DAYLIGHT OPENING
- P.F.H. : PARTIAL FRAME HEIGHT

DESIGN PRESSURE RATING: SINGLE DOORS WITH (2) ONE SIDED DEAD BOLTS (18)

POSITIVE	65 psf
NEGATIVE	65 psf

• APPROVED SHUTTERS COMPLYING WITH H.V.H.Z., F.B.C. ARE REQUIRED FOR INSTALLATION OF THESE UNITS.

***NOTE:**

ARRANGEMENT OF STRAIGHT OR CURVED RAILS AT DOOR SASH MAY VARY. HOWEVER, STRAIGHT RAILS SHALL ALWAYS BE COMPONENT (7A) AND CURVED RAILS SHALL ALWAYS BE COMPONENT (8A). CONNECTION OF RAILS TO SASH FRAME SHALL BE AS INDICATED ON SHEET 10. ARRANGEMENT MAY BE PERFORMED AT ALL DOOR TYPE OR CONFIGURATION INCLUDED ON THIS DRAWING.

INTERIOR ELEVATIONS (OUTSWING DOORS)

N.T.S.

Approved as complying with the Florida Building Code
Date MAY 19, 2005
NOA# 05-0203.05
Miami Dade Product Control Division
By Shaq I. Chanda

APR 07 2005

F.B.C. (H.V.H.Z.) / MIAMI-DADE COUNTY

TILTECO INC.
TILLIT TESTING & ENGINEERING COMPANY
6355 N.W. 36th. St., Sta. 305, VIRGINIA GARDENS, FL. 33166
Phone : (305)871-1530 . Fax : (305)871-1531
e-mail: tilteco@aol.com
EB-0006719
WALTER A. TILLIT Jr. P. E.
FLORIDA Lic. # 44167

NON IMPACT DOUBLE & SINGLE OUTSWING WOOD DOORS W/ GLASS PANEL, TRANSOM & SIDELITES

AS SHOWN SCALE

ECUAVALLEY DISTRIBUTORS, INC. d/b/a MIAMI VALLEY DOORS
12913 S.W. 133 CT.
MIAMI, FL 33186

MANUFACTURER:
COMDINAVALLE CIA. LTDA.
AV. OCCIDENTAL N. 61-124 Y F. ALFARO
QUITO-ECUADOR

10/13/04 DATE

04-135 DRAWING No

REV. No	DESCRIPTION	DATE	REV. No	DESCRIPTION	DATE
1	GENERAL	3/30/05	3		
2			4		

SHEET 4 OF 10

BILL OF MATERIALS

ITEM #	REQ'D.	DESCRIPTION	SIZE	MATERIAL & REMARKS
1	4	FRAME	1 1/2" x 5 1/2"	MAHOGANY WOOD
2A	2	STILE FOR GLASS	1 3/4" x 6" / 6 7/8"	MAHOGANY WOOD
3	1	ASTRAGAL STILE	1 7/8" x 3 3/4"	MAHOGANY WOOD "T" ASTRAGAL, ATTACHED TO INACTIVE STILE W/ #10 gage x 1 1/2" FLAT HEAD WOOD SCREWS STARTING AT 14" FROM TOP/BOTTOM, REST AT 12"o.c.
4A	AS REQ'D.	WOOD BEAD & MOLDING FOR GLASS	1 3/4" x 1 5/8"	MAHOGANY WOOD, ATTACHED W/ #8 gage x 1 3/4" WOOD SCREW AT 3" FROM ENDS, REST AT 9" o.c. + #18gagex1 1/4" GUN NAILS IN BETWEEN SCREWS TO WOOD
5A	1	TOP RAIL FOR GLASS	1 3/4" x 6" / 6 7/8"	MAHOGANY WOOD
6A	1	BOTTOM RAIL FOR GLASS	1 3/4" x 7 1/4" / 8 1/8"	MAHOGANY WOOD
6B	1	BOTTOM RAIL FOR SIDELITES	1 3/4" x7" / 7 7/8"	MAHOGANY WOOD
7A	1	INTERMEDIATE STRAIGHT RAIL FOR GLASS	1 3/4" x 3 3/4" / 5 1/2"	MAHOGANY WOOD
8A	1	INTERMEDIATE CURVED RAIL FOR GLASS	1 3/4" x 3 1/4" / 5"	MAHOGANY WOOD
9	1	HORIZONTAL MULLION	2" x 4" x 1/8" MULLION	6063-T6 ALUMINUM ALLOY, SEE DETAIL 1/7
10	2	VERTICAL MULLION	2" x 5" x 1/8" MULLION	6063-T6 ALUMINUM ALLOY, SEE DETAIL 2/7
11	1	THRESHOLD	5 3/16" w x 1 3/4" h	IMPERIAL MANUFACTURER, SERIAL BSN-134 (6063-T5 ALUM. ALLOY)
12	AS REQ'D.	WEATHERSTRIP	1/2" x 1"	SCHLEGEL MANUFACTURER, SERIAL # QEBD 650
13	AS REQ'D.	SEALANT - CEDAR TAN SILICONE	GLAZING & FRAME INSTALLATION SEALANT	DAP INC., DYNAFLEX 230, PREMIUM ELASTOMERIC LATEX SEALANT
14	AS REQ'D.	FRAME/THRESHOLD INSTALLATION SCREWS	1/4" F.H. TAPCONS W/ 1 1/4" EMBEDMENT AND 3" E.D. FOR CONCRETE/BLOCK 1/4" F.H. TAPCONS W/ 1 1/2" EMBEDMENT & 1" E.D. FOR WOOD	MANUFACTURED BY ITW/BUILDEX SEE ELEVATIONS FOR SPACINGS
14A	AS REQ'D.	FIXED SASH SIDELITES/TRANSOM SCREWS	#10x3" F.H. WOOD SCREWS (NON CORROSIVE)	AT 12" o.c Max. DRIVEN FROM OUTSIDE OF FRAME TO SASH
14B	AS REQ'D.	HEADER OR JAMB TO MULLION SCREWS	#14x2" F.H. S.D.S. (TEKS)	MANUFACTURED BY ITW/BUILDEX SEE ELEVATIONS FOR SPACINGS
16	AS REQ'D.	5/8" (NOMINAL) NON IMPACT GLASS	1/4" EXTERIOR TEMPERED GLASS + 3/16" INTERMEDIATE ANNEALED GLASS W/ LEAD 5/16" I BEAMS + 3/16" INTERIOR TEMPERED GLASS	
17	AS REQ'D.	HINGE	4"x4" SQUARE NON-REMOVABLE PIN US	DELTANA ENTERPRISES, INC.-SOLID BRASS HINGE SERIALS DSB4N, DSB4NB WITH (8) #10x1 1/4" F.H. WOOD SCREWS
18	1	ONE SIDED DEADBOLT	1 1/2"ø	KWIKSET CORPORATION- SERIAL 663
19	1	HANDLESETS (LOCKS) BUCKINGHAM HANDLESET WELLINGTON HANDLESET SHELBOURNE HANDLESET CHELSEA HANDLESET PLYMOUTH HANDLESET	MANUFACTURER - STYLE - SERIAL BALDWINN - BUCKINGHAM - 85380 - ANSI 2 GRADE SOCIETY BRASS - WELLINGTON - 841w - ANSI 2 GRADE SOCIETY BRASS - SHELBOURNE - 884w - ANSI 2 GRADE KWIKSET - CHELSEA - 800cex - ANSI 2 GRADE SCHLAGE - PLYMOUTH - F300 - ANSI 1 GRADE	EACH AND EVERY LOCK SHALL INCLUDE STANDARD DEAD BOLT.
20	2/SASH	EXTENSION FLUSH BOLT, SERIAL 12EFB	1" w x 6 3/4" h x 1" deep x 1/8" thk.	DELTANA ENTERPRISES, INC. BOLT W/ (4) #10x1 1/4" WOOD SCREWS TO SASH
21	2/SASH	STRIKE PLATE AT DOOR STYLE	1" w x 2" h x 1/16" thk. (SIMETRIC)	DELTANA ENTERPRISES, INC.-PLATE W/ (2) #8x1" WOOD SCREWS TO SASH
22	1/HEADER	STRIKE PLATE AT HEADER	1" w x 2 1/4" h x 1/16" thk. (NON SIMETRIC)	DELTANA ENTERPRISES, INC.-PLATE W/ (2) #8x1" WOOD SCREWS TO HEADER
23	AS REQ'D.	SASH CORNER & RAIL GLUE	APPLIED AT ALL MORTISE & TENON SURFACES	CARPENTER GLUE
24	AS REQ'D.	HORIZONTAL MULLION ANGLES	2"x2"x1/8"x0'-4" LONG ALUMINUM ANGLE	W/ (3) # 14x3/4"ø P.H. S.D.S & (2) 1/4"x2 1/4" F.H. TAPCONS
25	AS REQ'D.	VERTICAL MULLION ANGLES	2"x2"x1/8"x0'-4 1/2" LONG ALUMINUM ANGLE	W/ (3) # 14x3/4"ø P.H. S.D.S & (2) 1/4"x2 1/4" F.H. TAPCONS

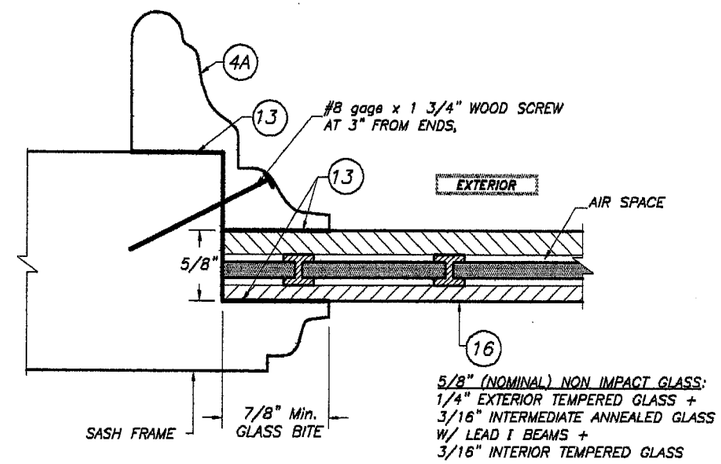

GLAZING DETAIL

N.T.S.

Approved as complying with the Florida Building Code
Date MAY 9, 2005
NOA# 05-0203.05
Miami Dade Product Control Division
By Shaq I. Chanda

F.B.C. (H.V.H.Z.) / MIAMI-DADE COUNTY

APR 07 2005

TILTECO INC.
TILLIT TESTING & ENGINEERING COMPANY
6355 N.W. 36th. St., Ste. 305, VIRGINIA GARDENS, Fl. 33166
Phone : (305)871-1530 . Fax : (305)871-1531
e-mail: tilteco@aol.com
EB-0006719
WALTER A. TILLIT Jr. P. E.
FLORIDA Lic. # 44167

NON IMPACT DOUBLE & SINGLE OUTSWING WOOD DOORS W/ GLASS PANEL, TRANSOM & SIDELITES

ECUAVALLEY DISTRIBUTORS, INC. d/b/a MIAMI VALLEY DOORS
12913 S.W. 133 CT.
MIAMI, FL 33186

MANUFACTURER:
COMDINAVALLE CIA. LTDA.
AV. OCCIDENTAL N. 61-124 Y F. ALFARO
QUITO-ECUADOR

REV. No	DESCRIPTION	DATE	REV. No	DESCRIPTION	DATE
1	GENERAL	3/30/05	3		
2			4		

AS SHOWN
SCALE

10/13/04
DATE

04-135
DRAWING No

SHEET 5 OF 10

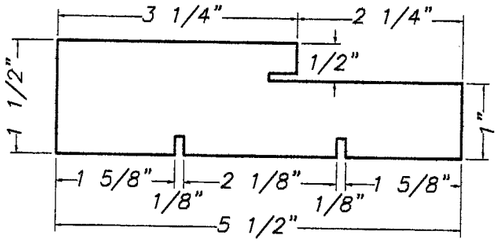

(1) FRAME

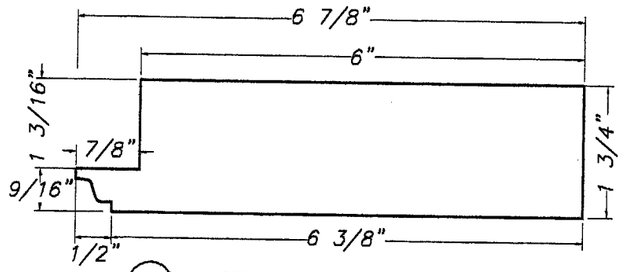

(2A) STILE FOR GLASS

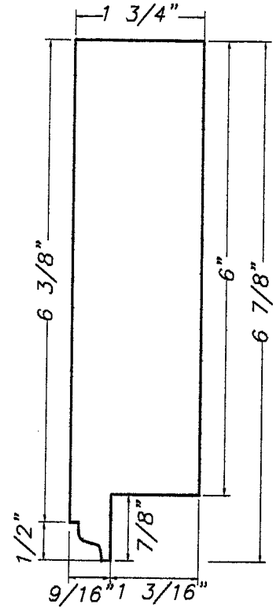

(5A) TOP RAIL FOR GLASS

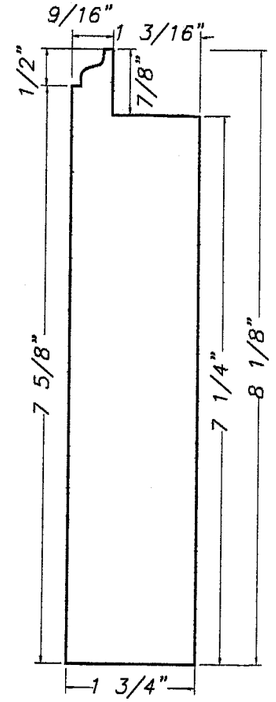

(6A) BOTTOM RAIL FOR GLASS

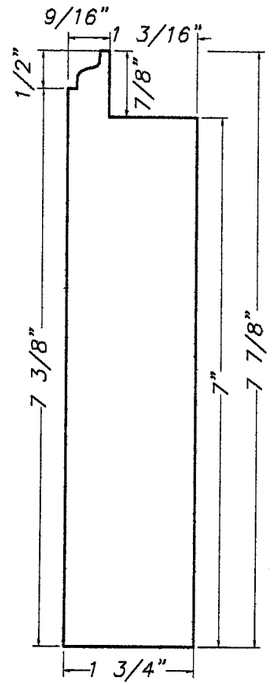

(6B) BOTTOM RAIL FOR SIDELITE

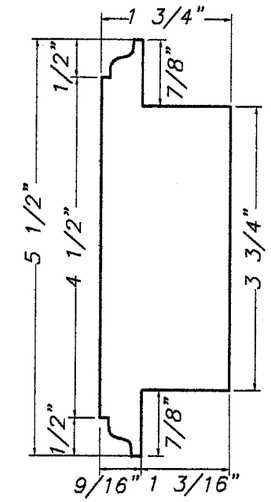

(7A) INTERMEDIATE STRAIGHT RAIL FOR GLASS

NOTE:
SCALE FOR ALL WOOD COMPONENTS IS 1/2"=1"

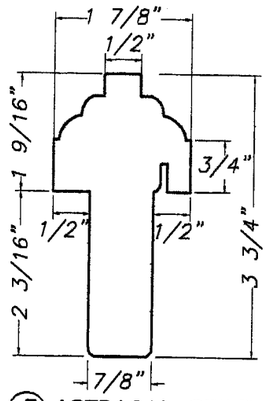

(3) ASTRAGAL STILE

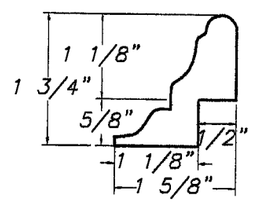

(4A) WOOD BEAD & MOLDING FOR GLASS

COMPONENTS

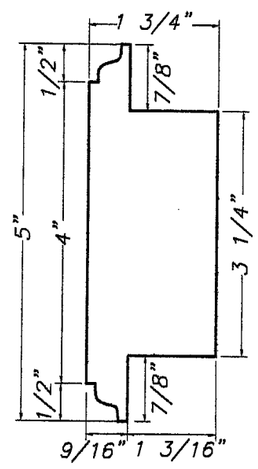

(8A) INTERMEDIATE CURVED RAIL FOR GLASS

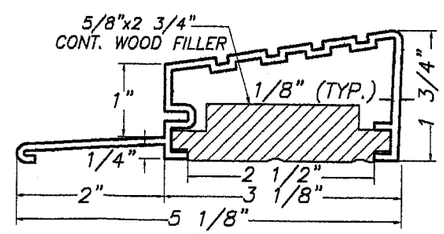

(11) THRESHOLD
1/2" = 1"

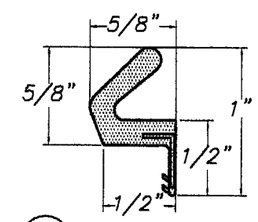

(12) WEATHERSTRIP
1" = 1"

Approved as complying with the Florida Building Code
Date MAY 19, 2005
NOA# 05-0203.05
Miami Dade Product Control Division
By Ishaq I. Chanda

APR 07 2005

F.B.C. (H.V.H.Z.) / MIAMI-DADE COUNTY

TILTECO INC.
TILLIT TESTING & ENGINEERING COMPANY
6355 N.W. 36th. St., Ste. 305, VIRGINIA GARDENS, FL 33166
Phone : (305)871-1530 . Fax : (305)871-1531
e-mail: tilteco@aol.com
EB-0006719
WALTER A. TILLIT Jr. P. E.
FLORIDA Lic. # 44167

NON IMPACT DOUBLE & SINGLE OUTSWING WOOD DOORS W/ GLASS PANEL, TRANSOM & SIDELITES

ECUAVALLEY DISTRIBUTORS, INC.
d/b/a MIAMI VALLEY DOORS
12913 S.W. 133 CT.
MIAMI, FL 33186

MANUFACTURER:
COMDINAVALLE CIA. LTDA.
AV. OCCIDENTAL N. 61-124 Y F. ALFARO
QUITO-ECUADOR

REV. No	DESCRIPTION	DATE	REV. No	DESCRIPTION	DATE
1	GENERAL	3/30/05	3		
2			4		

AS SHOWN
SCALE
10/13/04
DATE
04-135
DRAWING No
SHEET 6 OF 10

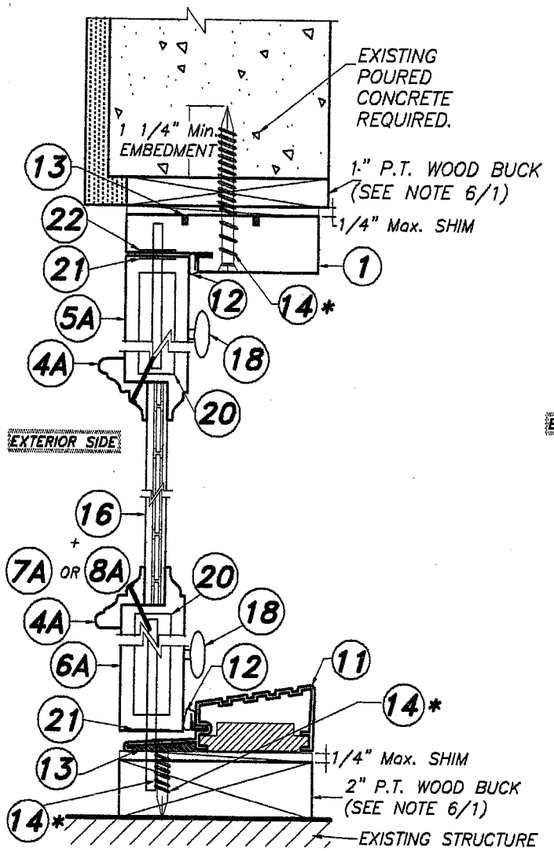

SECTION B–B
N.T.S.

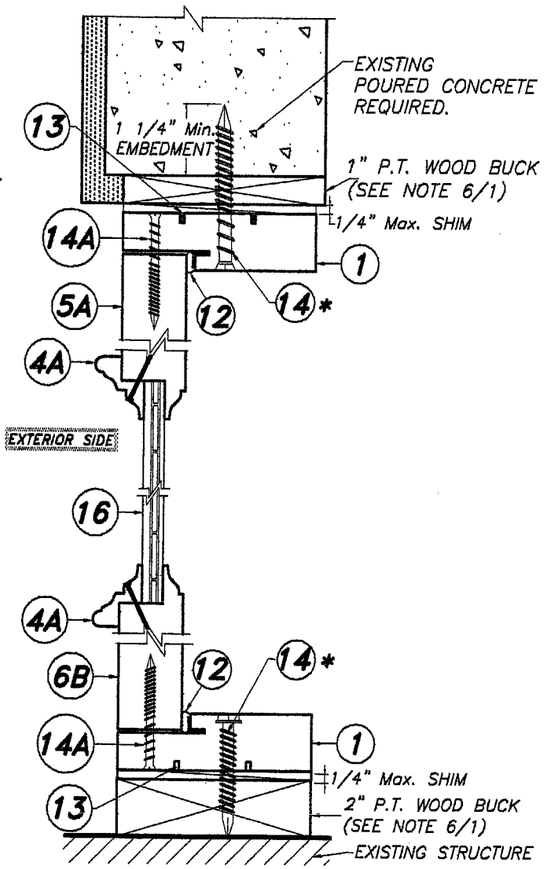

SECTION C–C (SIDELITE)
N.T.S.

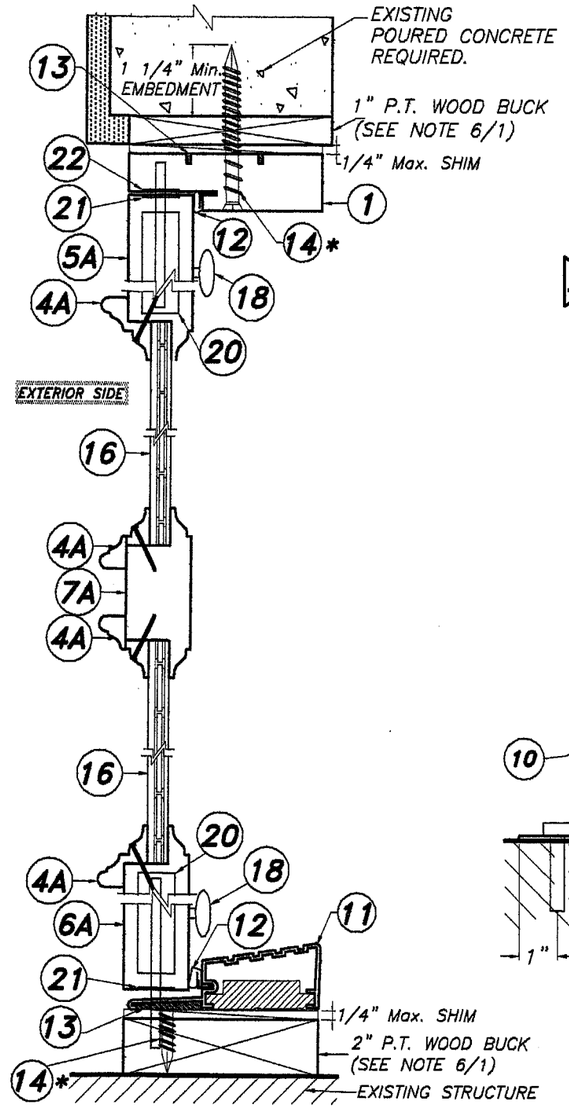

SECTION D–D
N.T.S.

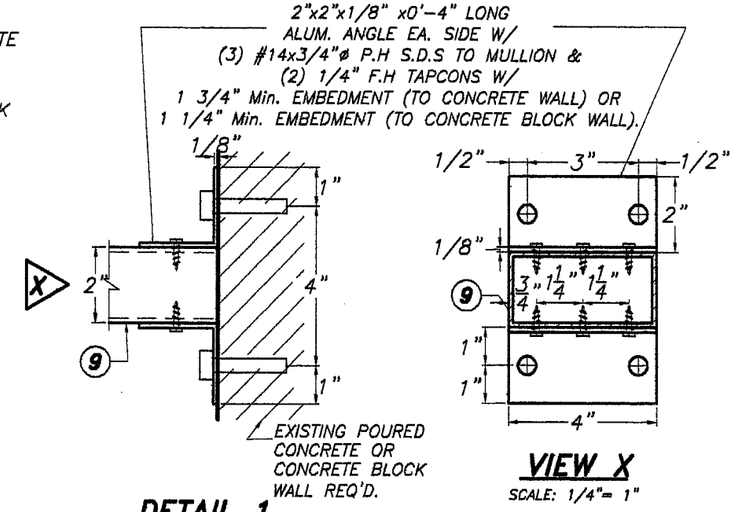

DETAIL 1
SCALE: 1/4"= 1"

VIEW X
SCALE: 1/4"= 1"

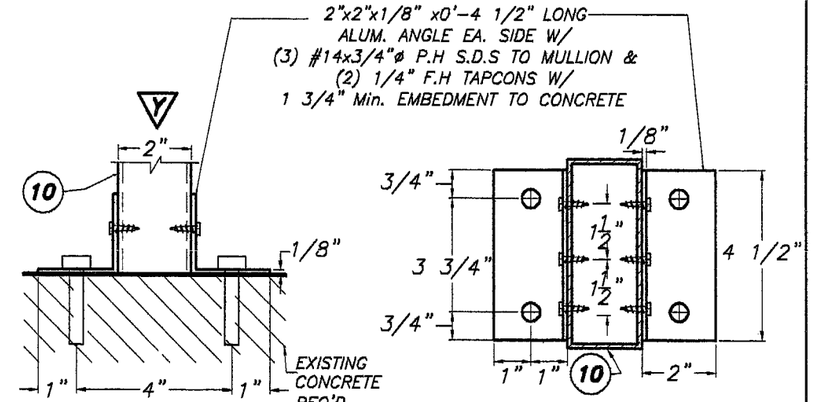

DETAIL 2
SCALE: 1/4"= 1"

VIEW Y
SCALE: 1/4"= 1"

* SEE ELEVATIONS FOR ANCHORS SPACINGS ON SHEETS 2, 3, & 4 OF 10

Approved as complying with the Florida Building Code
Date MAY 19, 2005
NOA# 05-0203.05
Miami Dade Product Control Division
By Ishaq I. Chanda

F.B.C. (H.V.H.Z.) / MIAMI–DADE COUNTY

APR 07 2005

TILTECO INC.
TILLIT TESTING & ENGINEERING COMPANY
6355 N.W. 36th. St., Ste. 305, VIRGINIA GARDENS, FL 33166
Phone : (305)871-1530 , Fax : (305)871-1531
e-mail: tilteco@aol.com
EB-0006719
WALTER A. TILLIT Jr. P. E.
FLORIDA Lic. # 44167

NON IMPACT DOUBLE & SINGLE OUTSWING WOOD DOORS W/ GLASS PANEL, TRANSOM & SIDELITES

ECUAVALLEY DISTRIBUTORS, INC. d/b/a MIAMI VALLEY DOORS
12913 S.W. 133 CT.
MIAMI, FL 33186

MANUFACTURER:
COMDINAVALLE CIA. LTDA.
AV. OCCIDENTAL N. 61-124 Y F. ALFARO
QUITO-ECUADOR

REV. No	DESCRIPTION	DATE	REV. No	DESCRIPTION	DATE
1	GENERAL	3/30/05	3		
2			4		

AS SHOWN SCALE
10/13/04 DATE
04-135 DRAWING No
SHEET 7 OF 10

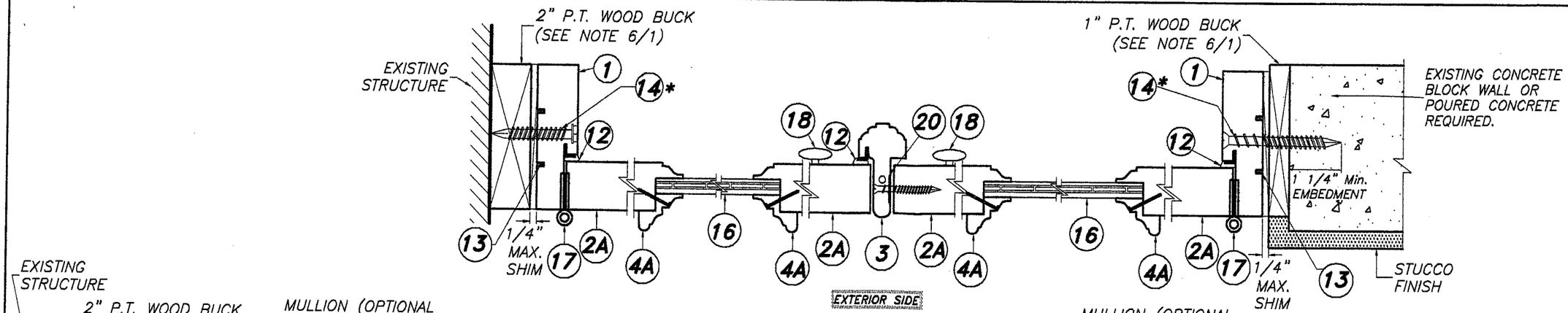

SECTION E-E: (OUTSWING DOORS)

(XX)

N.T.S.

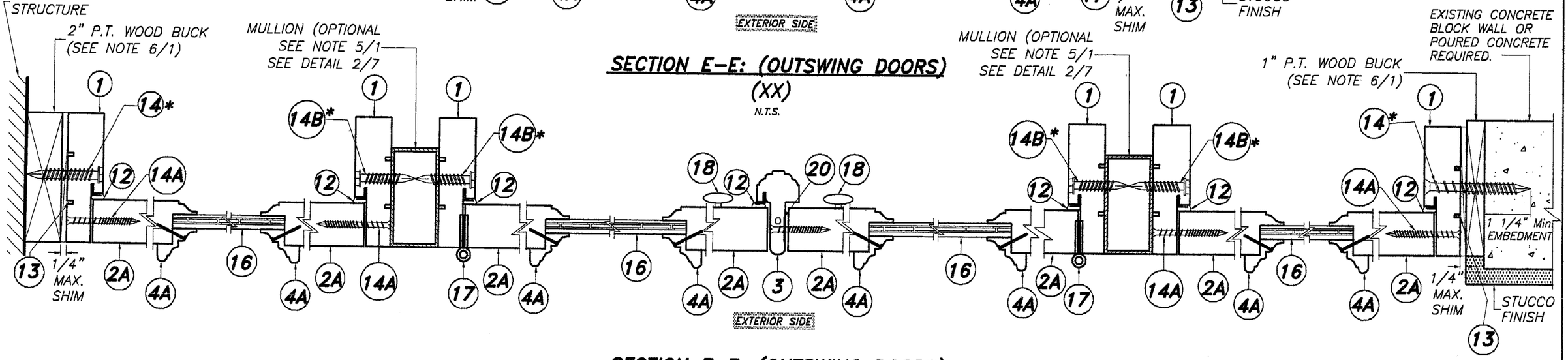

SECTION F-F: (OUTSWING DOORS)

(OXXO)

N.T.S.

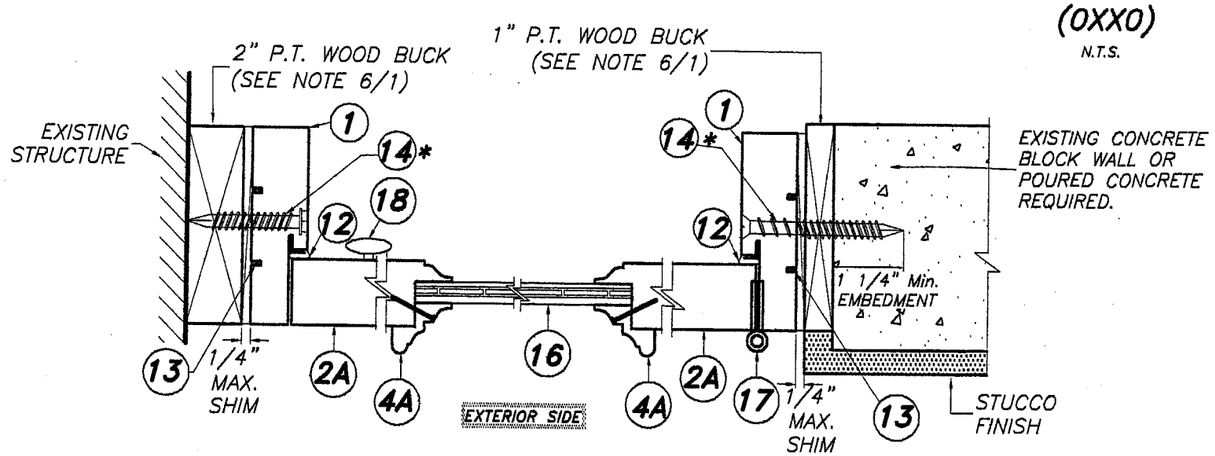

SECTION H-H: (OUTSWING DOORS)

(X)

N.T.S.

* SEE ELEVATIONS FOR ANCHORS SPACINGS ON SHEETS 2, 3, & 4 OF 10

Approved as complying with the Florida Building Code
Date MAY 19, 2005
NOA# 05-0203.05
Miami Dade Product Control Division
By Ishaq I. Chanda

APR 07 2005

F.B.C. (H.V.H.Z.) / MIAMI-DADE COUNTY

TILTECO INC.
TILLIT TESTING & ENGINEERING COMPANY
6355 N.W. 36th. St., Ste. 305, VIRGINIA GARDENS, FL. 33166
Phone : (305)871-1530 . Fax : (305)871-1531
e-mail: tilteco@aol.com
EB-0006719
WALTER A. TILLIT Jr. P. E.
FLORIDA Lic. # 44167

NON IMPACT DOUBLE & SINGLE OUTSWING WOOD DOORS W/ GLASS PANEL, TRANSOM & SIDELITES

ECUAVALLEY DISTRIBUTORS, INC. d/b/a MIAMI VALLEY DOORS
12913 S.W. 133 CT.
MIAMI, FL 33186

MANUFACTURER:
COMDINAVALLE CIA. LTDA.
AV. OCCIDENTAL N. 61-124 Y F. ALFARO
QUITO-ECUADOR

REV. No	DESCRIPTION	DATE	REV. No	DESCRIPTION	DATE
1	GENERAL	3/30/05	3		
2			4		

AS SHOWN
SCALE

10/13/04
DATE

04-135
DRAWING No

SHEET 8 OF 10

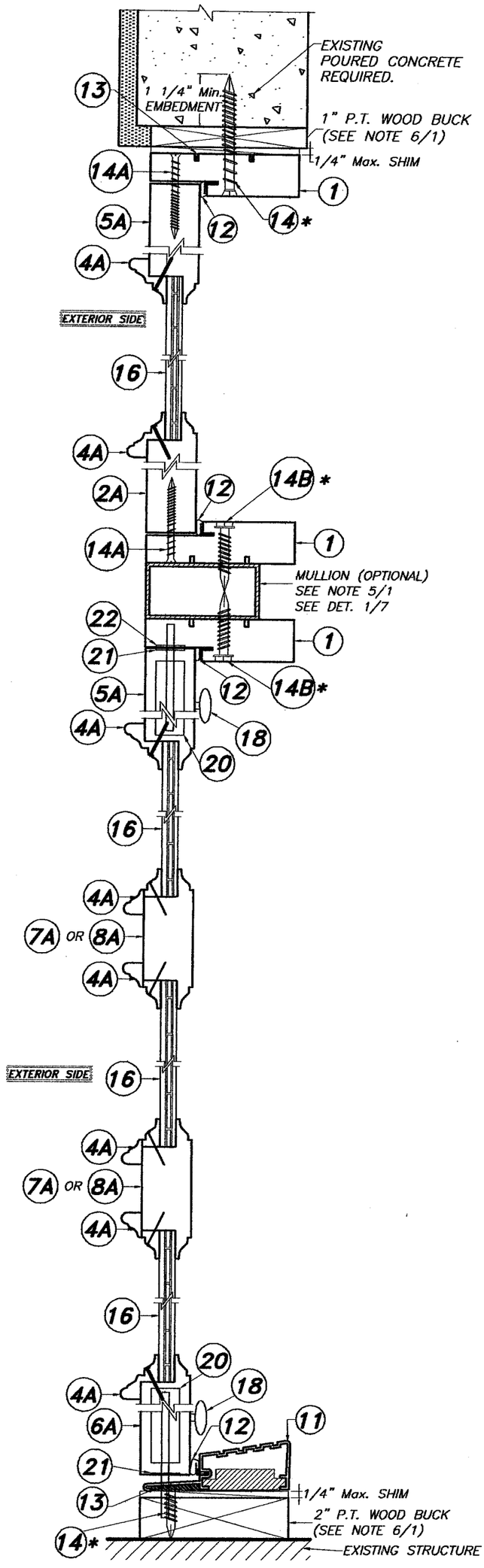

SECTION A–A

N.T.S.

* SEE ELEVATION FOR ANCHORS SPACINGS ON SHEET 2 OF 10

Approved as complying with the Florida Building Code
Date MAY 19, 2005
NOA# 05-0203.05
Miami Dade Product Control Division
By Ishaq I. Chanda

F.B.C. (H.V.H.Z.) / MIAMI–DADE COUNTY

APR 07 2005

TILTECO INC.
TILLIT TESTING & ENGINEERING COMPANY
6355 N.W. 36th. St., Ste. 305, VIRGINIA GARDENS, FL 33166
Phone : (305)871-1530 . Fax : (305)871-1531
e-mail: tilteco@aol.com
EB-0006719
WALTER A. TILLIT Jr. P. E.
FLORIDA Lic. # 44167

NON IMPACT DOUBLE & SINGLE OUTSWING WOOD DOORS W/ GLASS PANEL, TRANSOM & SIDELITES

ECUAVALLEY DISTRIBUTORS, INC. d/b/a MIAMI VALLEY DOORS
12913 S.W. 133 CT.
MIAMI, FL 33186

MANUFACTURER:
COMDINAVALLE CIA. LTDA.
AV. OCCIDENTAL N. 61-124 Y F. ALFARO
QUITO-ECUADOR

REV. No	DESCRIPTION	DATE	REV. No	DESCRIPTION	DATE
1	GENERAL	3/30/05	3		
2			4		

AS SHOWN SCALE

10/13/04 DATE

04-135 DRAWING No

SHEET 9 OF 10

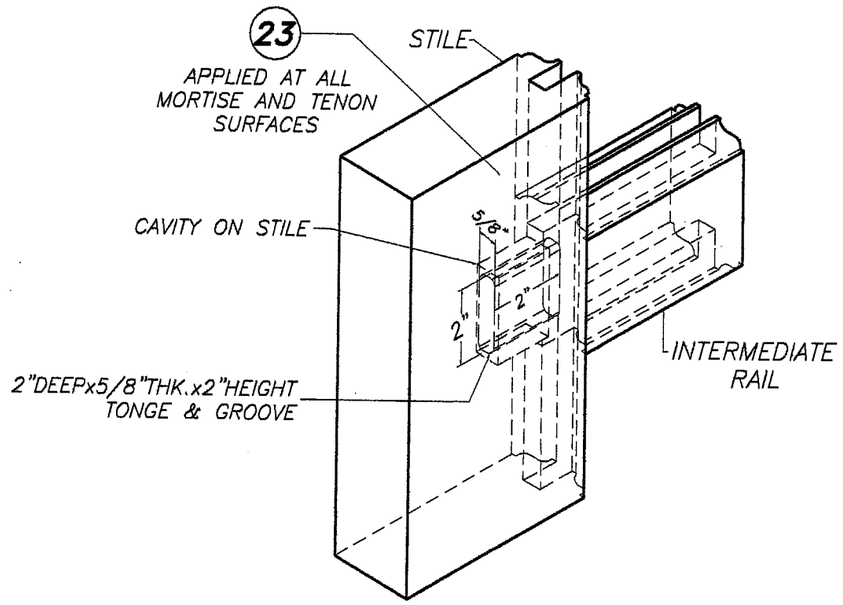

TYPICAL SASH INTERMEDIATE CONNECTION (EXTERIOR VIEW)

N.T.S.

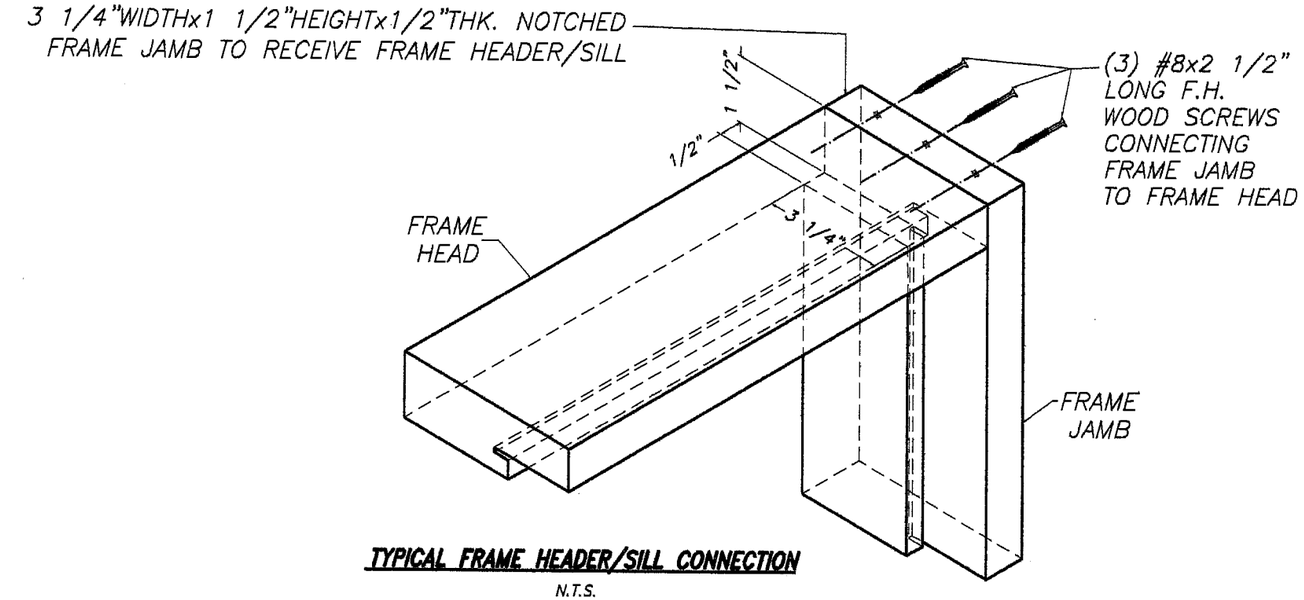

TYPICAL FRAME HEADER/SILL CONNECTION

N.T.S.

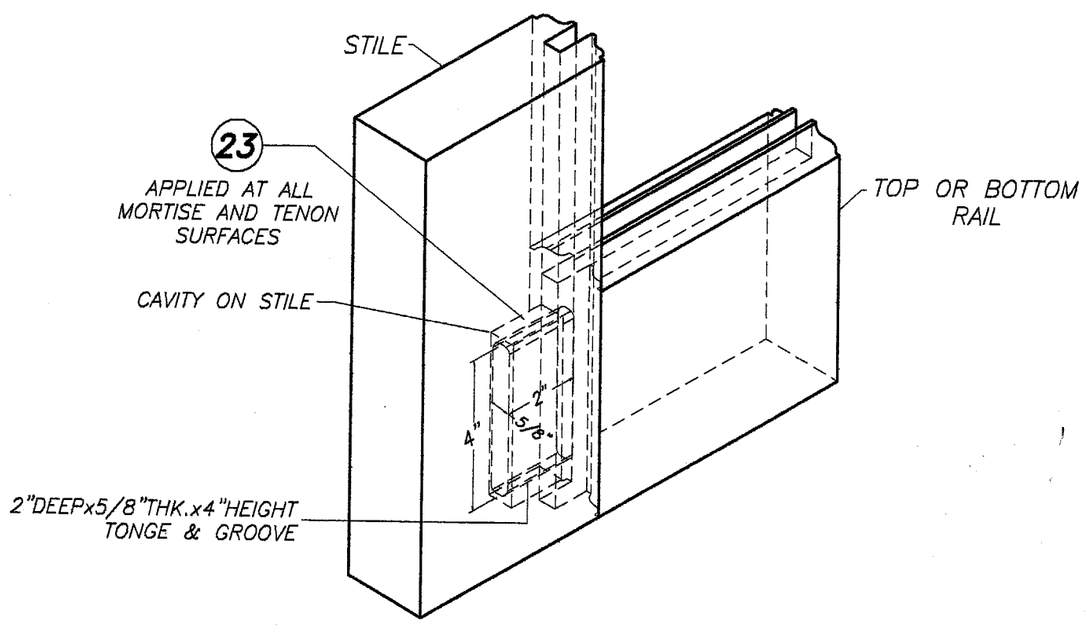

TYPICAL SASH TOP/BOTTOM CONNECTION (EXTERIOR VIEW)

N.T.S.

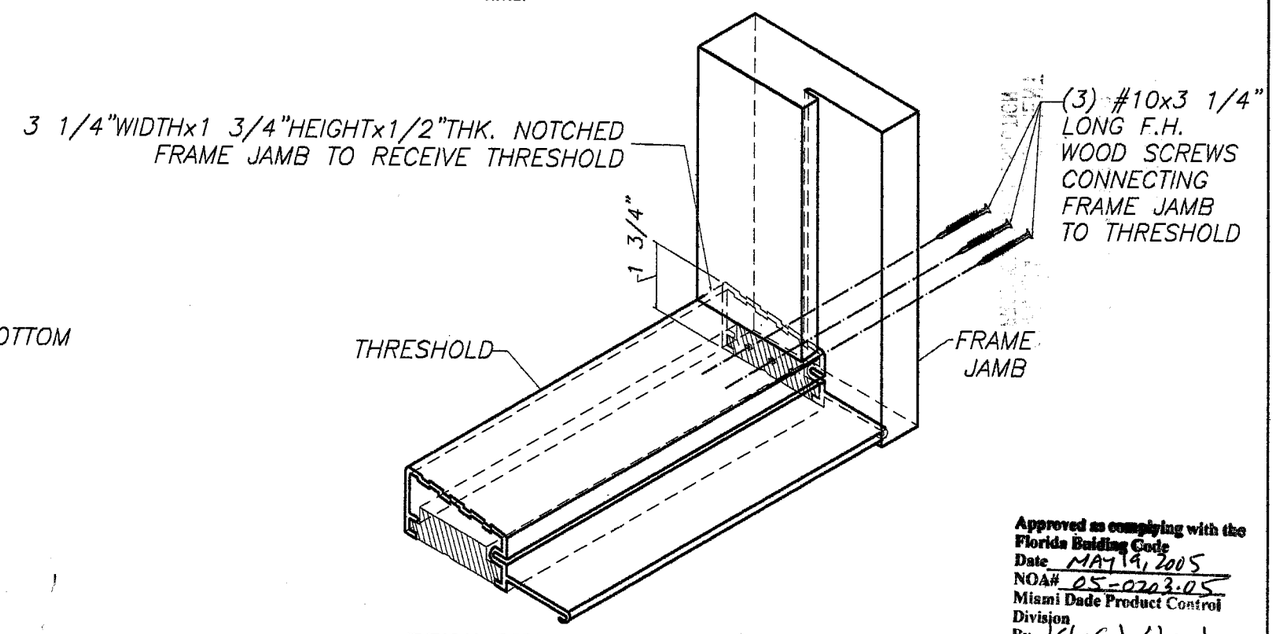

TYPICAL BOTTOM CONNECTIONS AT DOORS

N.T.S.

Approved as complying with the Florida Building Code
Date MAY 19, 2005
NOA# 05-0203.05
Miami Dade Product Control Division
By Shaq I. Chande

APR 07 2005

F.B.C. (H.V.H.Z.) / MIAMI-DADE COUNTY

TILTECO INC.
TILLIT TESTING & ENGINEERING COMPANY
6355 N.W. 36th. St., Ste. 308, VIRGINIA GARDENS, FL 33166
Phone : (305)871-1530 . Fax : (305)871-1531
e-mail: tilteco@aol.com
EB-0006719
WALTER A. TILLIT Jr. P. E.
FLORIDA Lic. # 44167

NON IMPACT DOUBLE & SINGLE OUTSWING WOOD DOORS W/ GLASS PANEL, TRANSOM & SIDELITES

AS SHOWN SCALE

ECUAVALLEY DISTRIBUTORS, INC. d/b/a MIAMI VALLEY DOORS
12913 S.W. 133 CT.
MIAMI, FL 33186

MANUFACTURER:
COMDINAVALLE CIA. LTDA.
AV. OCCIDENTAL N. 61-124 Y F. ALFARO
QUITO-ECUADOR

10/13/04 DATE

04-135 DRAWING No

REV. No	DESCRIPTION	DATE	REV. No	DESCRIPTION	DATE
1	GENERAL	3/30/05	3		
2			4		

SHEET 10 OF 10