MIAMI-DADE

BUILDING CODE COMPLIANCE OFFICE (BCCO)
PRODUCT CONTROL DIVISION

MIAMI-DADE COUNTY, FLORIDA
METRO-DADE FLAGLER BUILDING
140 WEST FLAGLER STREET, SUITE 1603
MIAMI, FLORIDA 33130-1563
(305) 375-2901 FAX (305) 375-2908

NOTICE OF ACCEPTANCE (NOA)

Cherokee Metals Company
4648 S. Old Peachtree Road
Norecross, GA 30071

SCOPE:
This NOA is being issued under the applicable rules and regulations governing the use of construction materials. The documentation submitted has been reviewed by Miami-Dade County Product Control Division and accepted by the Board of Rules and Appeals (BORA) to be used in Miami Dade County and other areas where allowed by the Authority Having Jurisdiction (AHJ).

This NOA shall not be valid after the expiration date stated below. The Miami-Dade County Product Control Division (In Miami Dade County) and/or the AHJ (in areas other than Miami Dade County) reserve the right to have this product or material tested for quality assurance purposes. If this product or material fails to perform in the accepted manner, the manufacturer will incur the expense of such testing and the AHJ may immediately revoke, modify, or suspend the use of such product or material within their jurisdiction. BORA reserves the right to revoke this acceptance, if it is determined by Miami-Dade County Product Control Division that this product or material fails to meet the requirements of the applicable building code.

This product is approved as described herein, and has been designed to comply with the High Velocity Hurricane Zone of the Florida Building Code.

DESCRIPTION: 0.040" Aluminum Deck (2.824" x 16") Panel for Canopy

APPROVAL DOCUMENT: Drawing No. 98-204, titled " 0.040" Aluminum Deck ", sheets 1 and 2 of 2, prepared by Cesar I. Soto, P.E., dated June 04, 1998, signed and sealed by Cesar I. Soto, P.E., on March 18, 2005, bearing the Miami-Dade County Product Control Revision stamp with the Notice of Acceptance number and expiration date by the Miami-Dade County Product Control Division.

MISSILE IMPACT RATING: None

LABELING: Each panel shall bear a permanent label with the manufacturer's name or logo, city, state and the following statement: "Miami-Dade County Product Control Approved", unless otherwise noted herein.

RENEWAL of this NOA shall be considered after a renewal application has been filed and there has been no change in the applicable building code negatively affecting the performance of this product.

TERMINATION of this NOA will occur after the expiration date or if there has been a revision or change in the materials, use, and/or manufacture of the product or process. Misuse of this NOA as an endorsement of any product, for sales, advertising or any other purposes shall automatically terminate this NOA. Failure to comply with any section of this NOA shall be cause for termination and removal of NOA.

ADVERTISEMENT: The NOA number preceded by the words Miami-Dade County, Florida, and followed by the expiration date may be displayed in advertising literature. If any portion of the NOA is displayed, then it shall be done in its entirety.

INSPECTION: A copy of this entire NOA shall be provided to the user by the manufacturer or its distributors and shall be available for inspection at the job site at the request of the Building Official.

This NOA **revises& renews NOA # 98-0608.12** and consists of this page 1, evidence submitted page(s) as well as approval document mentioned above.

The submitted documentation was reviewed by **Helmy A. Makar, P.E.**

PRODUCT CONTROL ACCEPTED

Helmy A. Makar
04/14/2005

NOA No 05-0211.01
Expiration Date: 04/14/2010
Approval Date: 04/14/2005

Cherokee Metals Company

NOTICE OF ACCEPTANCE: EVIDENCE SUBMITTED

1. EVIDENCE SUBMITTED UNDER PREVIOUS APPROVAL # 98-0608.12

A. DRAWINGS

1. *Drawing No. 98-204, titled "*0.04 Aluminum *Deck", prepared by William M. Meyers, P.E., dated June 4, 1998, last revised on December 8, 1998, sheet numbers 1 and 2, signed and sealed by William M. Meyers, P.E.*

B. TESTS

1. *Test report on Uniform Static Air Pressure Test on a* 0.040" Aluminum *deck Panel for Canopy, prepared by Fenestration Testing Laboratory, Inc., File #98-210, Report No. 4, dated August 14, 1998, signed and sealed by Gilbert Diamond, P.E.*

C. CALCULATIONS

1. *Calculations titled "*0.04 Aluminum – *Product Approval", dated October 1, 1998, pages 1 through 5, prepared by* ***William M. Meyers****, P.E., signed and sealed by* ***William M. Meyers****, P.E.*

D. MATERIAL CERTIFICATIONS

1. *Mill Certified Inspection Report, dated 04/30/97, for* Aluminum Panel, 3105-H12 Alloy, *by norandal with chemical composition and physical properties.*
2. *Tensile Test Report from QC Metallurgical, Inc., Report No. 8IM-2163, dated September 2, 1998, signed and sealed by Frank Grate, P.E.*

2. NEW EVIDENCE SUBMITTED

A. DRAWINGS:

1. *Drawing No. 98-204, titled " 0.040" Aluminum Deck ", sheets 1 and 2 of 2, prepared by Cesar I. Soto, P.E., dated June 04, 1998, signed and sealed by Cesar I. Soto, P.E., on March 18, 2005.*

B. TESTS:

1. *None.*

C. CALCULATIONS:

1. *None.*

D. QUALITY ASSURANCE

1. *By Miami-Dade County Building Code Compliance Office.*

E. MATERIAL CERTIFICATION:

1. *None.*

Helmy A. Makar, P. E.
Product Control Examiner
NOA No 05-0211.01
Expiration Date: 04/14/2010
Approval Date: 04/14/2005

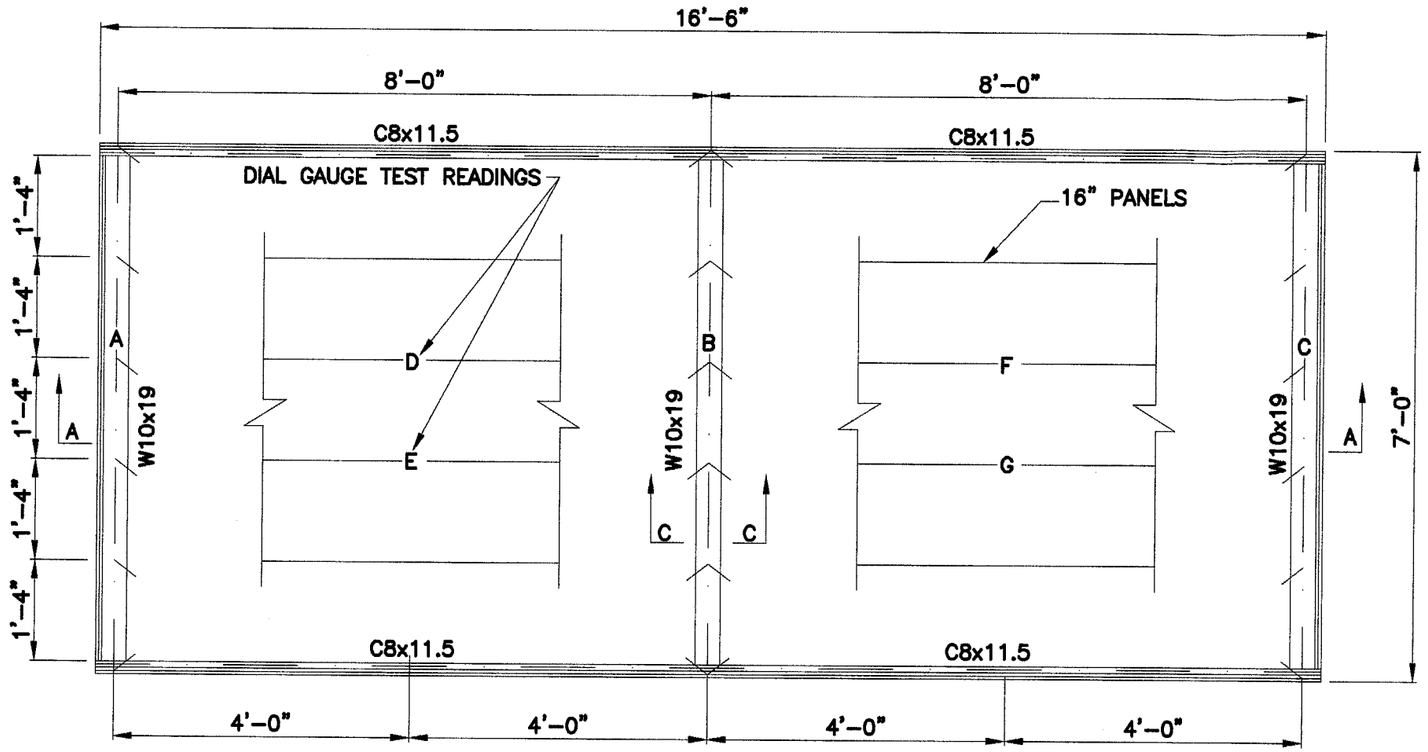

FRAMING PLAN

SCALE: ½"=1'-0"

GENERAL NOTES:

1. STRUCTURAL STEEL SHALL BE ASTM A-36 SPECIFICATION.
2. DECK SHALL BE ALUMINUM 3105-H12 ALLOY.
3. ALL BOLTS ¾"ø MATERIAL - A-307 U.O.N.
4. ALL WELDING TO BE ACCORDING TO A.W.S.-STANDARDS AND SHALL BE PREFORMED BY CERTIFIED WELDERS. ALL WELDS TO BE CHIPPED AND WIRE BRUSHED PRIOR TO PAINTING.

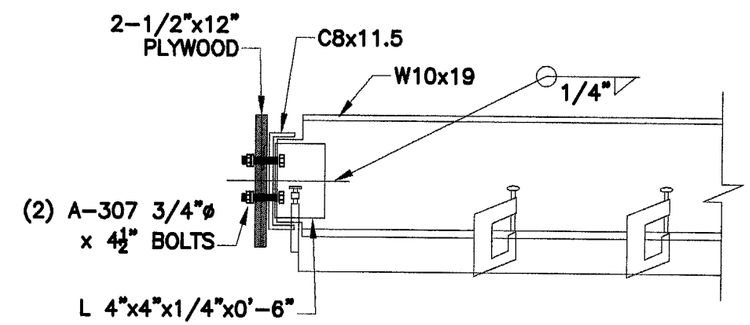

SECTION B-B

SCALE: 1"=1'-0"

PRODUCT REVISED
as complying with the Florida
Building Code
Acceptance No 05-0211.01
Expiration Date 04/14/2010
By Helena A. Nelson
Miami Dade Product Control
Division

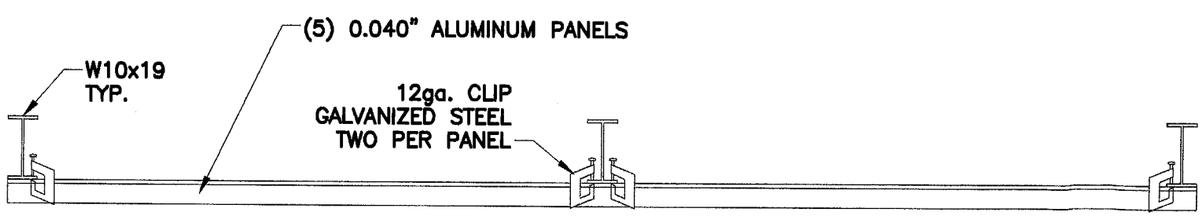

SECTION A-A

SCALE: ½"=1'-0"

Cesar I. Soto 3/18/05
CESAR I. SOTO, PE.
FL. NO. 59652
PO BOX 652038
MIAMI, FL 33265
305-638-7744

DATE	REVISION	BY
10/20/98	ADDED ALLOY SPECS.	R.D.
12/08/98	GENERAL REVISIO	R.D.
05/16/03	MODIFIED GAGE	F.R.

CHEROKEE METALS COMPANY

4648 S. OLD PEACHTREE ROAD-NORCROSS, GA 30071

TYP SECTIONS & DETAILS

PROJECT:

PRODUCT APPROVAL
0.040" ALUMINUM DECK

SCALE: ½"=1'-0"	CHKD./AP'V'D:
DATE: 03/18/05	PROJECT NO: 98-204
DRAWN BY: R.S.	SHEET NO. 1
CHECKED BY: C.I.S.	

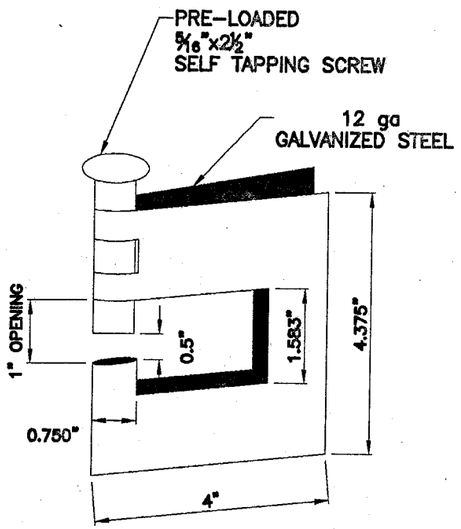

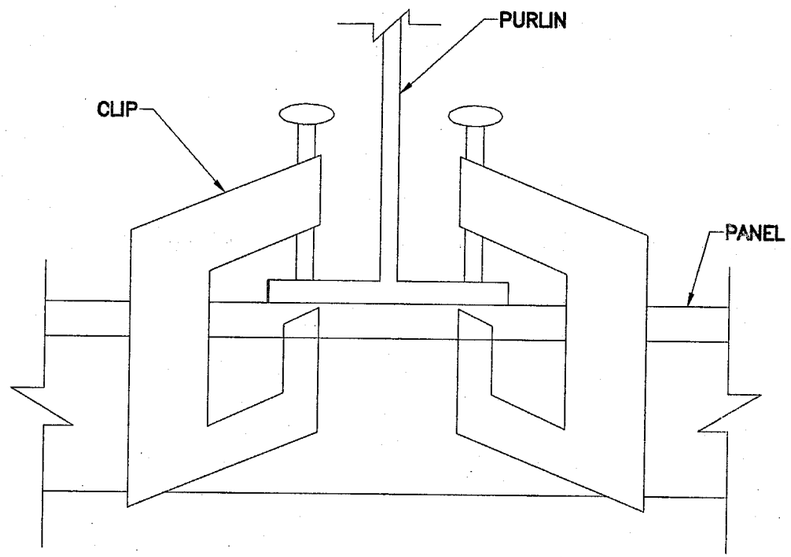

CLIP

SCALE: ⅜"=1'-0"

SECTION C-C AT EACH SUPPORT

SCALE: ⅜"=1'-0"

PANEL SPECIFICATIONS:

1. MATERIAL: 0.040" ALUMINUM/3105-H12 ALLOY.
2. MAXIMUM ALLOWABLE BENDING MOMENT OF PANEL AT SUPPORTS= ±373.0 ft=lbs.
3. MAXIMUM ALLOWABLE BENDING MOMENT OF PANEL BETWEEN SUPPORTS= ±210.0 ft-lbs.
4. MAX. DEFLECTION OF PANEL = L/180
5. EL = 5,101.179 ft-sq.in.
6. MAX. SUPPORT REACTION = 467 lbs FOR 2 CLIPS.
7. THE ABOVE ALLOWABLES ARE BASED ON A 16" WIDE PANEL LOADING. TO GET THE WIND LOAD PRESSURE PER SQUARE FOOT, MULTIPLY PANEL LOAD BY 12/16.
8. THIS PANEL SHALL BE USED ONLY IN THE CONSTRUCTION OF OPEN CANOPIES.
9. EACH ACTUAL CANOPY PROJECT SHALL BE CONSTRUCTED USING THE SAME PANEL CROSS SECTION AND SUPPORT DETAILS AT PURLINS AND INTERLOCKING SEAMS AS SHOWN ON THIS TEST. THE DESIGN OF THE PANEL SPAN SHALL BE IN COMPLIANCE WITH ALL OF THE ABOVE ALLOWABLES.

DESIGN SPECIFICATIONS:

1. CANOPIES SHALL BE DESIGNED IN COMPLIANCE WITH THE CURRENT F.B.C. AND ACCORDING TO THE WIND PROVISIONS OF ASCE 7-98.
2. TEST PRESSURE = ±70 psf
3. DESIGN PRESSURE = ±35 psf
4. LIVE LOAD TEST PRESSURE = 30 psf

PRODUCT REVISED
as complying with the Florida
Building Code
Acceptance No 05-0211.01
Expiration Date 04/14/2010
By Helmy A. Mel
Miami Dade Product Control
Division

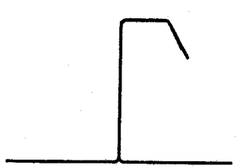

LAP DETAIL

SCALE: ⅜"=1'-0"

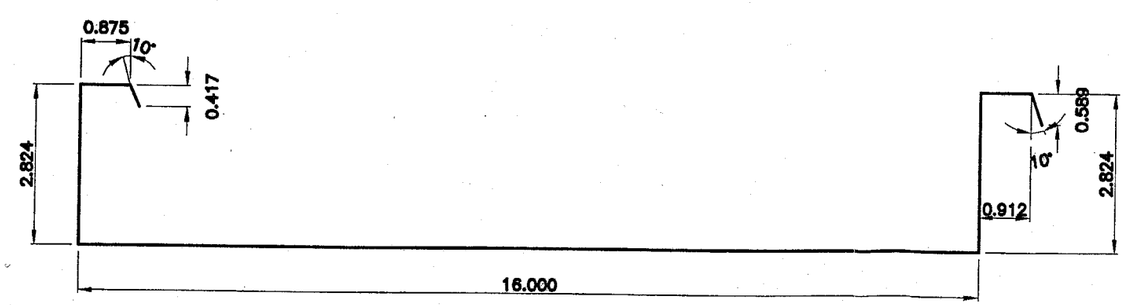

0.040" ALUMINUM PANEL

SCALE: ⅜"=1'-0"

Cesar I. Soto
3/18/05

DATE	REVISION	BY
10/20/98	ADDED ALLOY SPECS.	R.D.
12/08/98	GENERAL REVISION	R.D.
05/16/03	MODIFIED GAGE	F.R.

CHEROKEE METALS COMPANY
4648 S. OLD PEACHTREE ROAD-NORCROSS, GA 30071

TYP SECTIONS & DETAILS

PROJECT:
PRODUCT APPROVAL
0.040" ALUMINUM DECK

SCALE: 3/8"=1'-0"	CHKD./AP'V'D:
DATE: 06/04/98	PROJECT NO: 98-204
DRAWN BY: R.S.	SHEET NO. 2
CHECKED BY: C.I.S.	