MIAMI-DADE COUNTY
BUILDING CODE COMPLIANCE OFFICE (BCCO)
PRODUCT CONTROL DIVISION

MIAMI-DADE COUNTY, FLORIDA
METRO-DADE FLAGLER BUILDING

140 WEST FLAGLER STREET, SUITE 1603
MIAMI, FLORIDA 33130-1563
(305) 375-2901 FAX (305) 375-2908
www.buildingcodeonline.com

NOTICE OF ACCEPTANCE (NOA)

Windoor, Inc.
1978 Stanhome Way
Orlando, FL 32804

SCOPE:

This NOA is being issued under the applicable rules and regulations governing the use of construction materials. The documentation submitted has been reviewed by Miami-Dade County Product Control Division and accepted by the Board of Rules and Appeals (BORA) to be used in Miami Dade County and other areas where allowed by the Authority Having Jurisdiction (AHJ).

This NOA shall not be valid after the expiration date stated below. The Miami-Dade County Product Control Division (In Miami Dade County) and/or the AHJ (in areas other than Miami Dade County) reserve the right to have this product or material tested for quality assurance purposes. If this product or material fails to perform in the accepted manner, the manufacturer will incur the expense of such testing and the AHJ may immediately revoke, modify, or suspend the use of such product or material within their jurisdiction. BORA reserves the right to revoke this acceptance, if it is determined by Miami-Dade County Product Control Division that this product or material fails to meet the requirements of the applicable building code.

This product is approved as described herein, and has been designed to comply with the Florida Building Code, including the High Velocity Hurricane Zone.

DESCRIPTION: Series 2000 Aluminum Fixed Window-L.M.I.

APPROVAL DOCUMENT: Drawing No. **WIND0085,** titled "Series 2000 Picture Window Large Missile Elevation and General Notes", sheets 1 through 10 of 10, prepared by Product Technology Corporation, dated 09/15/04 with revision "**A**" on 04/06/05, signed and sealed by Eric S. Nielsen, P.E., bearing the Miami-Dade County Product Control Approval stamp with the Notice of Acceptance number and approval date by the Miami-Dade County Product Control Division.

MISSILE IMPACT RATING: Large and Small Missile Impact

LABELING: Each unit shall bear a permanent label with the manufacturer's name or logo, city, state and following statement: "Miami-Dade County Product Control Approved", unless otherwise noted herein.

RENEWAL of this NOA shall be considered after a renewal application has been filed and there has been no change in the applicable building code negatively affecting the performance of this product.

TERMINATION of this NOA will occur after the expiration date or if there has been a revision or change in the materials, use, and/or manufacture of the product or process. Misuse of this NOA as an endorsement of any product, for sales, advertising or any other purposes shall automatically terminate this NOA. Failure to comply with any section of this NOA shall be cause for termination and removal of NOA.

ADVERTISEMENT: The NOA number preceded by the words Miami-Dade County, Florida, and followed by the expiration date may be displayed in advertising literature. If any portion of the NOA is displayed, then it shall be done in its entirety.

INSPECTION: A copy of this entire NOA shall be provided to the user by the manufacturer or its distributors and shall be available for inspection at the job site at the request of the Building Official.

This NOA consists of this page 1 and evidence pages E-1, as well as approval document mentioned above

The submitted documentation was reviewed by **Herminio F. Gonzalez, P.E., Director, BCCO**

5/20/2005

PRODUCT CONTROL ACCEPTED

NOA No 05-0214.02
Expiration Date: June 09, 2010
Approval Date: June 09, 2005

Windoor, Inc.

NOTICE OF ACCEPTANCE: EVIDENCE SUBMITTED

A. DRAWINGS

1. Manufacturers die drawings and sections.
2. Drawing No. **WIND0085,** titled "Series 2000 Picture Window Large Missile Elevations and General Notes", sheets 1 through 10 of 10, prepared by Product Technology Corporation, dated 09/15/04 with revision "**A**" on 04/06/05, signed and sealed by Eric S. Nielsen, P.E.

B. TESTS

1. Test reports on 1) Air Infiltration Test, per FBC, TAS 202-94
   2) Uniform Static Air Pressure Test, Loading per FBC, TAS 202-94
   3) Water Resistance Test, per FBC, TAS 202-94
   4) Large Missile Impact Test per FBC, TAS 201-94
   5) Cyclic Wind Pressure Loading per FBC, TAS 203-94

   along with marked-up drawings and installation diagram of aluminum fixed window, prepared by National Certified Testing Laboratories, Test Report No. **NCTL-210-3019-3,** dated 07/13/04, signed and sealed by Gerald J. Ferrara, P.E.

C. CALCULATIONS

1. Anchor Calculations, ASTM-E1300, and structural analysis, prepared by Product Technology Corporation, dated 10/28/04, signed and sealed by Eric S. Nielsen, P.E.

D. QUALITY ASSURANCE

1. Miami Dade Building Code Compliance Office (BCCO).

E. MATERIAL CERTIFICATIONS

1. Notice of Acceptance No. 01-1204.01 issued to "E.I. DuPont Denemours" for "Sentry Glass ® Plus" dated 01/17/02, expiring on 01/14/07.
2. Notice of Acceptance No. 03-0415.13 issued to "Solutia, Inc." for "Vanceva Composites" dated 12/11/03, expiring on 12/11/08.

F. STATEMENTS

1. Statement letter of conformance and no financial interest, dated February 09, 2004, signed and sealed by Eric S. Nielsen, P.E.

G. OTHER

1. Letter from the consultant stating that the product is in compliance with the Florida Building Code (FBC).

for M Thabet

Herminio F. Gonzalez, P.E.
Director, Building Code Compliance Office
NOA No 05-0214.02
Expiration Date: June 09, 2010
Approval Date: June 09, 2005

GENERAL NOTES:

1) THIS PRODUCT SHOWN HEREIN IS DESIGNED AND MANUFACTURED TO COMPLY WITH THE FLORIDA BUILDING CODE INCLUDING "HVHZ". Ⓐ
2) WOOD BUCK, STEEL OR WOOD FRAMING TO BE DESIGNED AND ANCHORED TO PROPERLY TRANSFER ALL LOADS TO STRUCTURE, BUCK OR FRAMING IS RESPONSIBILITY OF ARCHITECT OF RECORD.
3) INSTALLATION OF THIS UNIT ABOVE GRADE WILL NOT REQUIRE PROTECTIVE SHUTTERS. Ⓐ
4) SEE COMPARATIVE ANALYSIS & DESIGN PRESSURE CHARTS ON SHEETS 2 – 4.

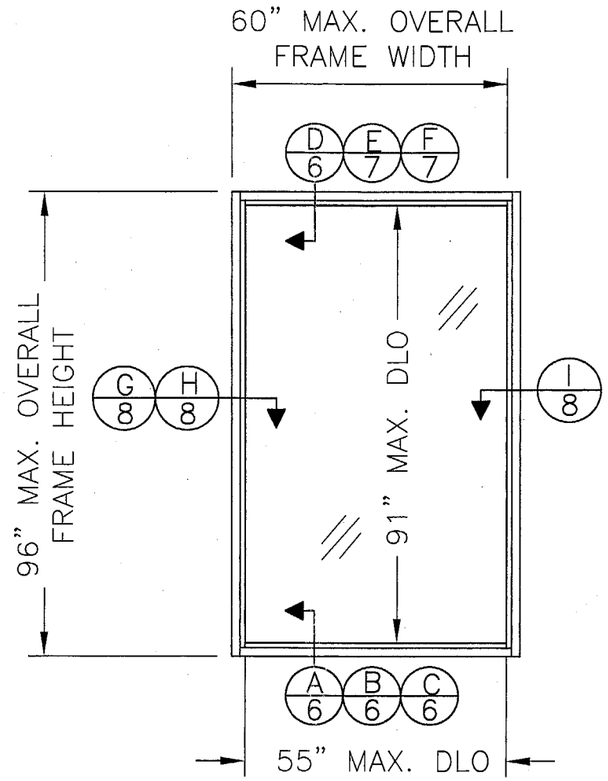

2000 PICTURE WINDOW

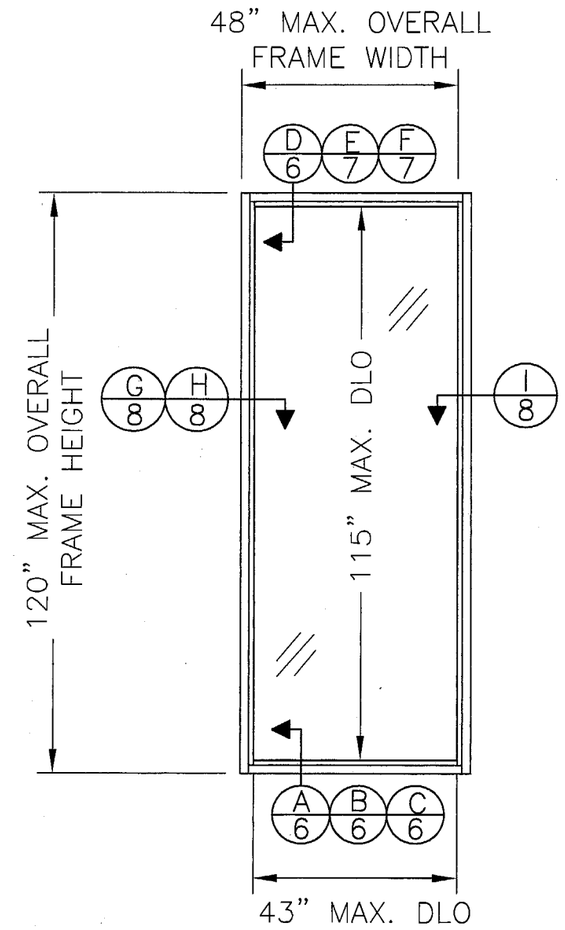

2000 PICTURE WINDOW

Approved as complying with the Florida Building Code
Date 06/09/05
NOA# 05.0214.02
Miami-Dade Product Control Division
By

TABLE OF CONTENTS

SHEET	SHEET DESCRIPTION
1	ELEVATION & GENERAL NOTES
2 TO 4	COMPARATIVE ANALYSIS & DESIGN PRESSURE CHARTS
5	ANCHORING ELEVATIONS
6	VERTICAL CROSS SECTIONS
7	VERTICAL CROSS SECTIONS
8	HORIZONTAL CROSS SECTIONS
9	GLAZING DETAILS
10	BILL OF MATERIAL

SYM	REVISION	DATE	BY
A	PER DADE LETTER DATED 3/22/05	4/06/05	BB

4/25/05

Eric S. Nielsen
Florida P. E. No. 41323
Product Technology Corporation
1150 Louisiana Ave., Suite 6
Winter Park, Florida 32789

WINDOOR, INC.
1978 STANHOME WAY ORLANDO, FL 32804

TITLE: SERIES 2000 PICTURE WINDOW LARGE MISSILE ELEVATION AND GENERAL NOTES

PREPARED BY: PTC Product Technology Corporation
Phone 407.622.6334 Fax 407.622.6335

DRN:	DATE:
DRL	09/15/04
SCALE: N.T.S.	DWG. NO: WIND0085
REV: A	SHEET: 1 OF 10

COMPARATIVE ANALYSIS TABLE		
WINDOW SIZE IN INCHES	DESIGN PRESSURE IN PSF GLAZING TYPE A	
	POSITIVE	NEGATIVE
24" X 36"	+ 140.0	– 150.0
24" X 42"	+ 140.0	– 150.0
24" X 48"	+ 140.0	– 150.0
24" X 54"	+ 140.0	– 150.0
24" X 60"	+ 140.0	– 150.0
24" X 66"	+ 140.0	– 150.0
24" X 72"	+ 140.0	– 150.0
24" X 78"	+ 140.0	– 150.0
24" X 84"	+ 140.0	– 150.0
24" X 90"	+ 140.0	– 150.0
24" X 96"	+ 140.0	– 150.0
24" X 102"	+ 140.0	– 150.0
24" X 108"	+ 140.0	– 150.0
24" X 114"	+ 140.0	– 150.0
24" X 120"	+ 140.0	– 150.0
30" X 36"	+ 140.0	– 150.0
30" X 42"	+ 140.0	– 150.0
30" X 48"	+ 140.0	– 150.0
30" X 54"	+ 140.0	– 150.0
30" X 60"	+ 140.0	– 150.0
30" X 66"	+ 140.0	– 150.0
30" X 72"	+ 140.0	– 150.0
30" X 78"	+ 140.0	– 150.0
30" X 84"	+ 140.0	– 150.0
30" X 90"	+ 140.0	– 150.0
30" X 96"	+ 140.0	– 150.0
30" X 102"	+ 140.0	– 150.0
30" X 108"	+ 140.0	– 150.0
30" X 114"	+ 140.0	– 150.0
30" X 120"	+ 140.0	– 150.0

COMPARATIVE ANALYSIS TABLE		
WINDOW SIZE IN INCHES	DESIGN PRESSURE IN PSF GLAZING TYPE A	
	POSITIVE	NEGATIVE
36" X 36"	+ 140.0	– 150.0
36" X 42"	+ 140.0	– 150.0
36" X 48"	+ 140.0	– 150.0
36" X 54"	+ 140.0	– 150.0
36" X 60"	+ 140.0	– 150.0
36" X 66"	+ 140.0	– 150.0
36" X 72"	+ 140.0	– 150.0
36" X 78"	+ 140.0	– 150.0
36" X 84"	+ 140.0	– 150.0
36" X 90"	+ 140.0	– 150.0
36" X 96"	+ 140.0	– 150.0
36" X 102"	+ 140.0	– 150.0
36" X 108"	+ 140.0	– 150.0
36" X 114"	+ 140.0	– 150.0
36" X 120"	+ 140.0	– 150.0
42" X 36"	+ 140.0	– 150.0
42" X 42"	+ 140.0	– 150.0
42" X 48"	+ 140.0	– 150.0
42" X 54"	+ 140.0	– 150.0
42" X 60"	+ 140.0	– 150.0
42" X 66"	+ 140.0	– 150.0
42" X 72"	+ 140.0	– 150.0
42" X 78"	+ 140.0	– 150.0
42" X 84"	+ 140.0	– 150.0
42" X 90"	+ 140.0	– 150.0
42" X 96"	+ 140.0	– 150.0
42" X 102"	+ 140.0	– 150.0
42" X 108"	+ 140.0	– 150.0
42" X 114"	+ 140.0	– 150.0
42" X 120"	+ 140.0	– 150.0

COMPARATIVE ANALYSIS TABLE		
WINDOW SIZE IN INCHES	DESIGN PRESSURE IN PSF GLAZING TYPE A	
	POSITIVE	NEGATIVE
48" X 36"	+ 140.0	– 150.0
48" X 42"	+ 140.0	– 150.0
48" X 48"	+ 140.0	– 150.0
48" X 54"	+ 140.0	– 150.0
48" X 60"	+ 140.0	– 150.0
48" X 66"	+ 140.0	– 150.0
48" X 72"	+ 140.0	– 150.0
48" X 78"	+ 140.0	– 150.0
48" X 84"	+ 140.0	– 150.0
48" X 90"	+ 140.0	– 150.0
48" X 96"	+ 140.0	– 149.3
48" X 102"	+ 140.0	– 146.4
48" X 108"	+ 140.0	– 144.0
48" X 114"	+ 140.0	– 141.8
48" X 120"	+ 140.0	– 140.0
54" X 36"	+ 140.0	– 150.0
54" X 42"	+ 140.0	– 150.0
54" X 48"	+ 140.0	– 150.0
54" X 54"	+ 140.0	– 150.0
54" X 60"	+ 140.0	– 150.0
54" X 66"	+ 140.0	– 150.0
54" X 72"	+ 140.0	– 150.0
54" X 78"	+ 140.0	– 150.0
54" X 84"	+ 140.0	– 150.0
54" X 90"	+ 140.0	– 150.0
54" X 96"	+ 140.0	– 148.8

COMPARATIVE ANALYSIS TABLE		
WINDOW SIZE IN INCHES	DESIGN PRESSURE IN PSF GLAZING TYPE A	
	POSITIVE	NEGATIVE
60" X 36"	+ 140.0	– 150.0
60" X 42"	+ 140.0	– 150.0
60" X 48"	+ 140.0	– 150.0
60" X 54"	+ 140.0	– 150.0
60" X 60"	+ 140.0	– 150.0
60" X 66"	+ 140.0	– 150.0
60" X 72"	+ 140.0	– 150.0
60" X 78"	+ 140.0	– 150.0
60" X 84"	+ 140.0	– 149.7
60" X 90"	+ 140.0	– 144.4
60" X 96"	+ 140.0	– 140.0

Approved as complying with the Florida Building Code
Date 06/09/05
NOA# 05-0214.02
Miami Dade Product Control Division
By

SYM	REVISION	DATE	BY
A	PER DADE LETTER DATED 3/22/05	4/06/05	BB

4/25/05
Eric S. Nielsen
Florida P. E. No. 41323
Product Technology Corporation
1150 Louisiana Ave., Suite 6
Winter Park, Florida 32789
FBPE Certificate of Authorization NO. 8681

WINDOOR, INC.
1978 STANHOME WAY ORLANDO, FL 32804

TITLE: SERIES 2000 PICTURE WINDOW LARGE MISSILE COMPARATIVE ANALYSIS CHARTS – GLAZING TYPE A

PREPARED BY: PTC Product Technology Corporation
Phone 407.622.6334 Fax 407.622.6335

DRN: DRL	DATE: 09/15/04
SCALE: N.T.S.	DWG. NO: WIND0085
REV: A	SHEET: 2 OF 10

COMPARATIVE ANALYSIS CHART		
WINDOW SIZE IN INCHES	DESIGN PRESSURE IN PSF GLAZING TYPES B & D	
	POSITIVE	NEGATIVE
24" X 36"	+ 110.0	– 150.0
24" X 42"	+ 110.0	– 150.0
24" X 48"	+ 110.0	– 150.0
24" X 54"	+ 110.0	– 150.0
24" X 60"	+ 110.0	– 150.0
24" X 66"	+ 110.0	– 150.0
24" X 72"	+ 110.0	– 150.0
24" X 78"	+ 110.0	– 150.0
24" X 84"	+ 110.0	– 150.0
24" X 90"	+ 110.0	– 150.0
24" X 96"	+ 110.0	– 150.0
24" X 102"	+ 110.0	– 150.0
24" X 108"	+ 110.0	– 150.0
24" X 114"	+ 110.0	– 150.0
24" X 120"	+ 110.0	– 150.0
30" X 36"	+ 110.0	– 150.0
30" X 42"	+ 110.0	– 150.0
30" X 48"	+ 110.0	– 150.0
30" X 54"	+ 110.0	– 150.0
30" X 60"	+ 110.0	– 150.0
30" X 66"	+ 110.0	– 150.0
30" X 72"	+ 110.0	– 150.0
30" X 78"	+ 110.0	– 150.0
30" X 84"	+ 110.0	– 150.0
30" X 90"	+ 110.0	– 150.0
30" X 96"	+ 110.0	– 150.0
30" X 102"	+ 110.0	– 150.0
30" X 108"	+ 110.0	– 150.0
30" X 114"	+ 110.0	– 150.0
30" X 120"	+ 110.0	– 150.0

COMPARATIVE ANALYSIS CHART		
WINDOW SIZE IN INCHES	DESIGN PRESSURE IN PSF GLAZING TYPES B & D	
	POSITIVE	NEGATIVE
36" X 36"	+ 110.0	– 150.0
36" X 42"	+ 110.0	– 150.0
36" X 48"	+ 110.0	– 150.0
36" X 54"	+ 110.0	– 150.0
36" X 60"	+ 110.0	– 150.0
36" X 66"	+ 110.0	– 150.0
36" X 72"	+ 110.0	– 150.0
36" X 78"	+ 110.0	– 150.0
36" X 84"	+ 110.0	– 149.3
36" X 90"	+ 110.0	– 146.7
36" X 96"	+ 110.0	– 144.4
36" X 102"	+ 110.0	– 142.5
36" X 108"	+ 110.0	– 140.8
36" X 114"	+ 110.0	– 139.3
36" X 120"	+ 110.0	– 138.0
42" X 36"	+ 110.0	– 150.0
42" X 42"	+ 110.0	– 150.0
42" X 48"	+ 110.0	– 150.0
42" X 54"	+ 110.0	– 150.0
42" X 60"	+ 110.0	– 150.0
42" X 66"	+ 110.0	– 147.5
42" X 72"	+ 110.0	– 142.0
42" X 78"	+ 110.0	– 137.6
42" X 84"	+ 110.0	– 134.1
42" X 90"	+ 110.0	– 131.2
42" X 96"	+ 110.0	– 128.7
42" X 102"	+ 110.0	– 126.6
42" X 108"	+ 110.0	– 124.8
42" X 114"	+ 110.0	– 123.3
42" X 120"	+ 110.0	– 121.9

COMPARATIVE ANALYSIS CHART		
WINDOW SIZE IN INCHES	DESIGN PRESSURE IN PSF GLAZING TYPES B & D	
	POSITIVE	NEGATIVE
48" X 36"	+ 110.0	– 150.0
48" X 42"	+ 110.0	– 150.0
48" X 48"	+ 110.0	– 150.0
48" X 54"	+ 110.0	– 150.0
48" X 60"	+ 110.0	– 146.7
48" X 66"	+ 110.0	– 138.3
48" X 72"	+ 110.0	– 132.0
48" X 78"	+ 110.0	– 127.1
48" X 84"	+ 110.0	– 123.2
48" X 90"	+ 110.0	– 120.0
48" X 96"	+ 110.0	– 117.3
48" X 102"	+ 110.0	– 115.1
48" X 108"	+ 110.0	– 113.1
48" X 114"	+ 110.0	– 111.4
48" X 120"	+ 110.0	– 110.0
54" X 36"	+ 110.0	– 150.0
54" X 42"	+ 110.0	– 150.0
54" X 48"	+ 110.0	– 150.0
54" X 54"	+ 110.0	– 150.0
54" X 60"	+ 110.0	– 150.0
54" X 66"	+ 110.0	– 142.2
54" X 72"	+ 110.0	– 134.4
54" X 78"	+ 110.0	– 128.5
54" X 84"	+ 110.0	– 123.8
54" X 90"	+ 110.0	– 120.0
54" X 96"	+ 110.0	– 116.9

COMPARATIVE ANALYSIS CHART		
WINDOW SIZE IN INCHES	DESIGN PRESSURE IN PSF GLAZING TYPES B & D	
	POSITIVE	NEGATIVE
60" X 36"	+ 110.0	– 150.0
60" X 42"	+ 110.0	– 150.0
60" X 48"	+ 110.0	– 150.0
60" X 54"	+ 110.0	– 150.0
60" X 60"	+ 110.0	– 150.0
60" X 66"	+ 110.0	– 138.6
60" X 72"	+ 110.0	– 129.6
60" X 78"	+ 110.0	– 122.9
60" X 84"	+ 110.0	– 117.6
60" X 90"	+ 110.0	– 113.4
60" X 96"	+ 110.0	– 110.0

Approved as complying with the Florida Building Code
Date 06/09/05
NOA# 05-0214.02
Miami-Dade Product Control Division
By

SYM	REVISION	DATE	BY
A	PER DADE LETTER DATED 3/22/05	4/06/05	BB

4/25/05
Eric S. Nielsen
Florida P. E. No. 41323
Product Technology Corporation
1150 Louisiana Ave., Suite 6
Winter Park, Florida 32789
FBPE Certificate of Authorization NO. 8681

WINDOOR, INC.
1978 STANHOME WAY ORLANDO, FL 32804

TITLE: SERIES 2000 PICTURE WINDOW LARGE MISSILE COMPARATIVE ANALYSIS CHARTS–GLAZING TYPES B & D

PREPARED BY: PTC Product Technology Corporation
Phone 407.622.6334 Fax 407.622.6335

DRN: DRL	DATE: 09/15/04
SCALE: N.T.S.	DWG. NO: WIND0085
REV: A	SHEET: 3 OF 10

COMPARATIVE ANALYSIS TABLE		
WINDOW SIZE IN INCHES	DESIGN PRESSURE IN PSF GLAZING TYPE C	
	POSITIVE	NEGATIVE
24" X 36"	+ 150.0	– 175.0
24" X 42"	+ 150.0	– 175.0
24" X 48"	+ 150.0	– 175.0
24" X 54"	+ 150.0	– 175.0
24" X 60"	+ 150.0	– 175.0
24" X 66"	+ 150.0	– 175.0
24" X 72"	+ 150.0	– 175.0
24" X 78"	+ 150.0	– 175.0
24" X 84"	+ 150.0	– 175.0
24" X 90"	+ 150.0	– 175.0
24" X 96"	+ 150.0	– 175.0
24" X 102"	+ 150.0	– 175.0
24" X 108"	+ 150.0	– 175.0
24" X 114"	+ 150.0	– 175.0
24" X 120"	+ 150.0	– 175.0
30" X 36"	+ 150.0	– 175.0
30" X 42"	+ 150.0	– 175.0
30" X 48"	+ 150.0	– 175.0
30" X 54"	+ 150.0	– 175.0
30" X 60"	+ 150.0	– 175.0
30" X 66"	+ 150.0	– 175.0
30" X 72"	+ 150.0	– 175.0
30" X 78"	+ 150.0	– 175.0
30" X 84"	+ 150.0	– 175.0
30" X 90"	+ 150.0	– 175.0
30" X 96"	+ 150.0	– 175.0
30" X 102"	+ 150.0	– 175.0
30" X 108"	+ 150.0	– 175.0
30" X 114"	+ 150.0	– 175.0
30" X 120"	+ 150.0	– 175.0

COMPARATIVE ANALYSIS TABLE		
WINDOW SIZE IN INCHES	DESIGN PRESSURE IN PSF GLAZING TYPE C	
	POSITIVE	NEGATIVE
36" X 36"	+ 150.0	– 175.0
36" X 42"	+ 150.0	– 175.0
36" X 48"	+ 150.0	– 175.0
36" X 54"	+ 150.0	– 175.0
36" X 60"	+ 150.0	– 175.0
36" X 66"	+ 150.0	– 175.0
36" X 72"	+ 150.0	– 175.0
36" X 78"	+ 150.0	– 175.0
36" X 84"	+ 150.0	– 175.0
36" X 90"	+ 150.0	– 175.0
36" X 96"	+ 150.0	– 175.0
36" X 102"	+ 150.0	– 175.0
36" X 108"	+ 150.0	– 175.0
36" X 114"	+ 150.0	– 175.0
36" X 120"	+ 150.0	– 175.0
42" X 36"	+ 150.0	– 175.0
42" X 42"	+ 150.0	– 175.0
42" X 48"	+ 150.0	– 175.0
42" X 54"	+ 150.0	– 175.0
42" X 60"	+ 150.0	– 175.0
42" X 66"	+ 150.0	– 175.0
42" X 72"	+ 150.0	– 175.0
42" X 78"	+ 150.0	– 175.0
42" X 84"	+ 150.0	– 175.0
42" X 90"	+ 150.0	– 175.0
42" X 96"	+ 150.0	– 175.0
42" X 102"	+ 150.0	– 175.0
42" X 108"	+ 150.0	– 175.0
42" X 114"	+ 150.0	– 175.0
42" X 120"	+ 150.0	– 175.0

COMPARATIVE ANALYSIS TABLE		
WINDOW SIZE IN INCHES	DESIGN PRESSURE IN PSF GLAZING TYPE C	
	POSITIVE	NEGATIVE
48" X 36"	+ 150.0	– 175.0
48" X 42"	+ 150.0	– 175.0
48" X 48"	+ 150.0	– 175.0
48" X 54"	+ 150.0	– 175.0
48" X 60"	+ 150.0	– 175.0
48" X 66"	+ 150.0	– 175.0
48" X 72"	+ 150.0	– 175.0
48" X 78"	+ 150.0	– 175.0
48" X 84"	+ 150.0	– 175.0
48" X 90"	+ 150.0	– 175.0
48" X 96"	+ 150.0	– 175.0
48" X 102"	+ 150.0	– 175.0
48" X 108"	+ 150.0	– 175.0
48" X 114"	+ 150.0	– 175.0
48" X 120"	+ 150.0	– 175.0
54" X 36"	+ 150.0	– 175.0
54" X 42"	+ 150.0	– 175.0
54" X 48"	+ 150.0	– 175.0
54" X 54"	+ 150.0	– 175.0
54" X 60"	+ 150.0	– 175.0
54" X 66"	+ 150.0	– 175.0
54" X 72"	+ 150.0	– 175.0
54" X 78"	+ 150.0	– 175.0
54" X 84"	+ 150.0	– 175.0
54" X 90"	+ 150.0	– 175.0
54" X 96"	+ 150.0	– 175.0

COMPARATIVE ANALYSIS TABLE		
WINDOW SIZE IN INCHES	DESIGN PRESSURE IN PSF GLAZING TYPE C	
	POSITIVE	NEGATIVE
60" X 36"	+ 150.0	– 175.0
60" X 42"	+ 150.0	– 175.0
60" X 48"	+ 150.0	– 175.0
60" X 54"	+ 150.0	– 175.0
60" X 60"	+ 150.0	– 175.0
60" X 66"	+ 150.0	– 175.0
60" X 72"	+ 150.0	– 175.0
60" X 78"	+ 150.0	– 175.0
60" X 84"	+ 150.0	– 175.0
60" X 90"	+ 150.0	– 175.0
60" X 96"	+ 150.0	– 175.0

Approved as complying with the Florida Building Code
Date 06/09/05
NOA# 05-0214.02
Miami-Dade Product Control Division
By

SYM	REVISION	DATE	BY
A	PER DADE LETTER DATED 3/22/05	4/06/05	BB

4/25/05
Eric S. Nielsen
Florida P. E. No. 41323
Product Technology Corporation
1150 Louisiana Ave., Suite 6
Winter Park, Florida 32789
FBPE Certificate of Authorization NO. 8681

WINDOOR, INC.
1978 STANHOME WAY ORLANDO, FL 32804

TITLE: SERIES 2000 PICTURE WINDOW LARGE MISSILE COMPARATIVE ANALYSIS CHARTS – GLAZING TYPE C

PREPARED BY: PTC Product Technology Corporation
Phone 407.622.6334 Fax 407.622.6335

DRN:	DATE:
DRL	09/15/04
SCALE: N.T.S.	DWG. NO: WIND0085
REV: A	SHEET: 4 OF 10

INSTALLATION NOTES:

1) SHIM AS REQUIRED AT EACH SET OF INSTALLATION ANCHORS USING LOAD BEARING SHIMS. MAXIMUM ALLOWABLE SHIM STACK TO BE 1/4". USE SHIMS WHERE SPACE GREATER THAN 1/16" IS PRESENT.
2) ONE (1) ANCHOR IS REQUIRED AT EACH ANCHOR LOCATION SHOWN.
3) CONCRETE OR MASONRY SUBSTRATE WHERE ONE BY, NON-STRUCTRUAL, WOOD BUCKING IS EMPLOYED, USE 1/4" DIAMETER RAWL TAPPER TYPE CONCRETE SCREW ANCHORS OF SUFFICIENT LENGTH TO ACHIEVE 1 1/4" MINIMUM EMBEDMENT INTO CONCRETE OR MASONRY.
4) WOOD FRAME SUBSTRATE, USE #14 WOOD SCREWS OF SUFFICIENT LENGTH TO ACHIEVE 1 3/8" MINIMUM EMBEDMENT INTO WOOD FRAMING.
5) STEEL STUD FRAMING, USE #14 SELF TAPPING SHEET METAL SCREWS OF SUFFICIENT LENGTH TO PENETRATE BEYOND THE STEEL STUD FRAMING A MINIMUM OF THREE PITCHES OF THREAD.

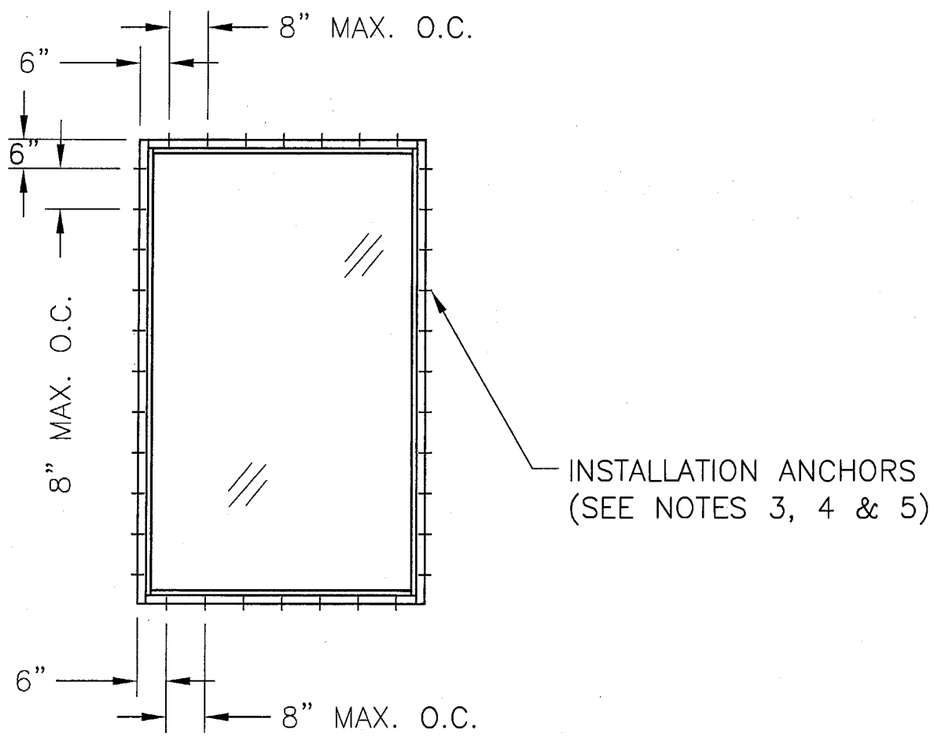

SERIES 2000 PICTURE WINDOW

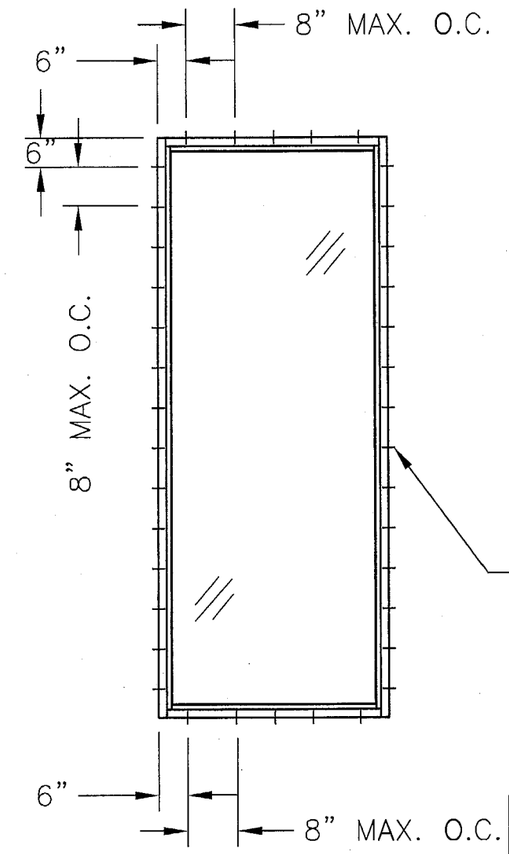

SERIES 2000 PICTURE WINDOW

Approved as complying with the Florida Building Code
Date 06/09/05
NOA# 05-0214.02
Miami Dade Product Control Division
By

SYM	REVISION	DATE	BY
A	PER DADE LETTER DATED 3/22/05	4/08/05	BB

4/25/05
Eric S. Nielsen
Florida P. E. No. 41323
Product Technology Corporation
1150 Louisiana Ave., Suite 6
Winter Park, Florida 32789

WINDOOR, INC.
1978 STANHOME WAY ORLANDO, FL 32804

TITLE: SERIES 2000 PICTURE WINDOW LARGE MISSILE ANCHOR ELEVATIONS

PREPARED BY: PTC Product Technology Corporation
Phone 407.622.6334 Fax 407.622.6335

DRN: DRL	DATE: 09/15/04
SCALE: N.T.S.	DWG. NO: WIND0085
REV: A	SHEET: 5 OF 10

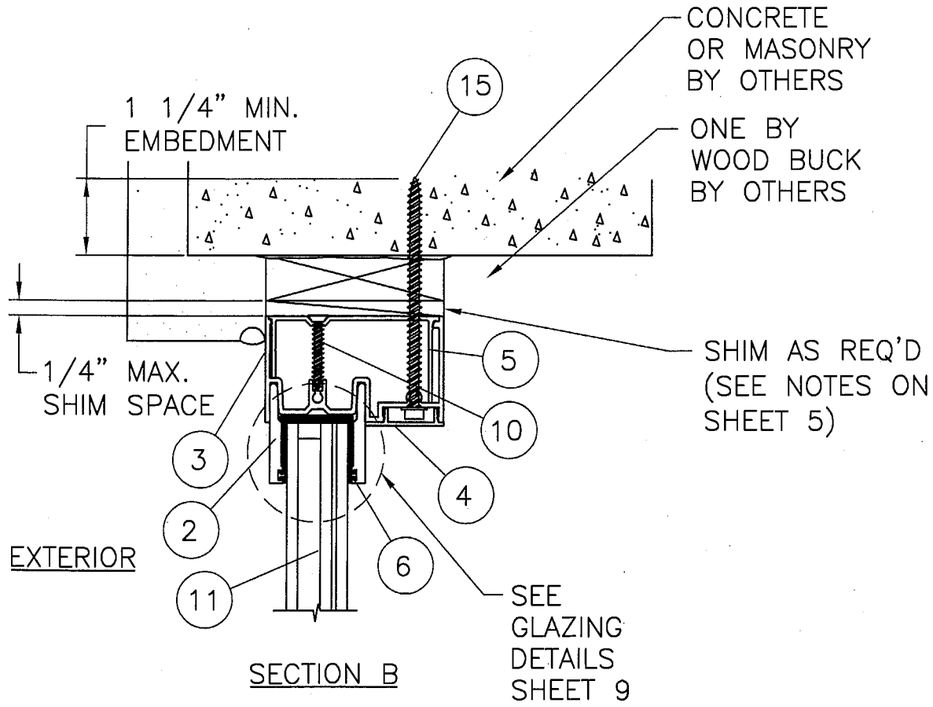

SECTION B

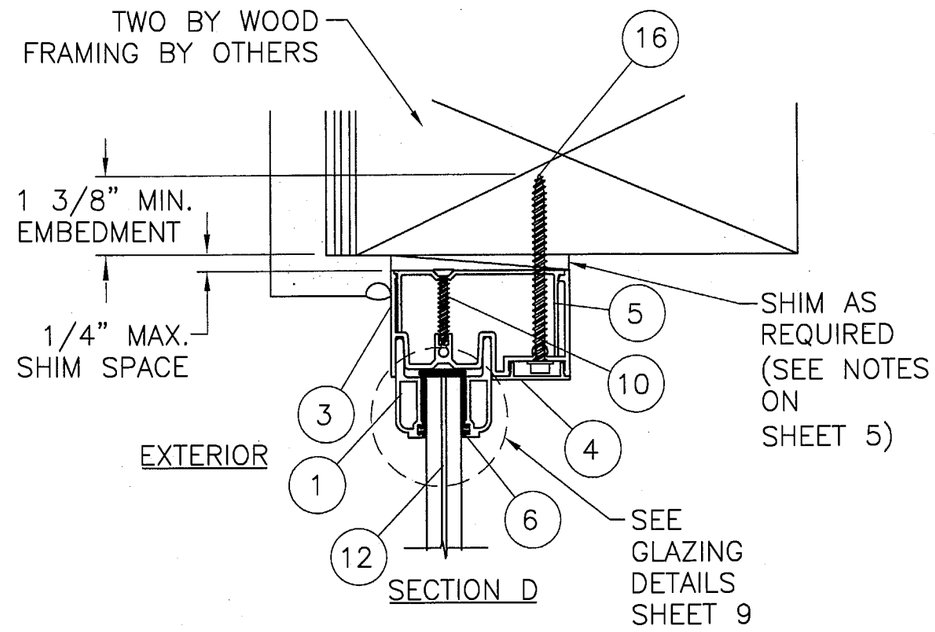

SECTION D

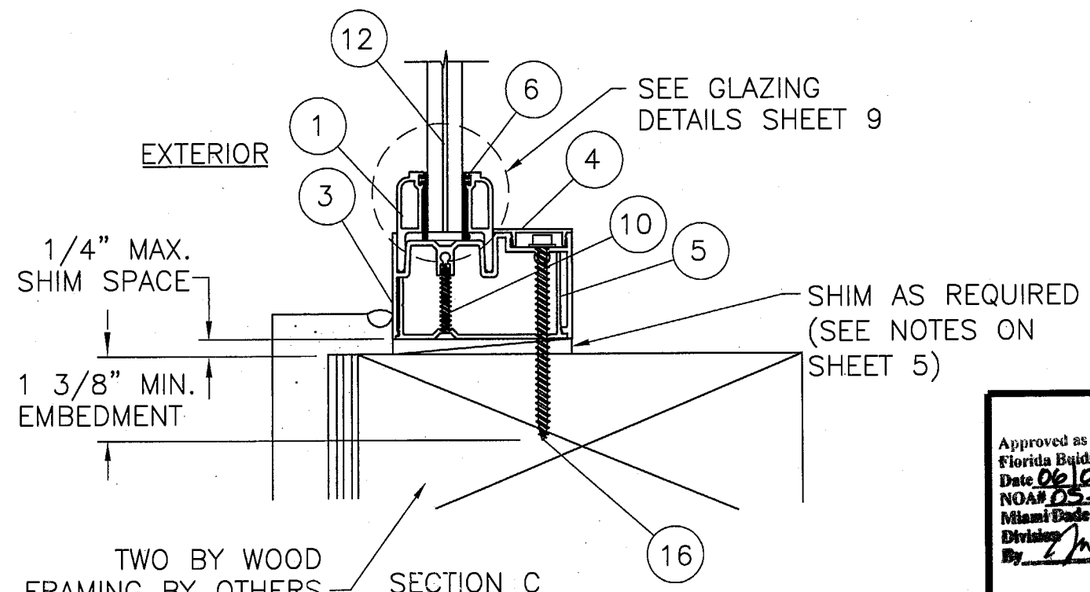

SECTION C

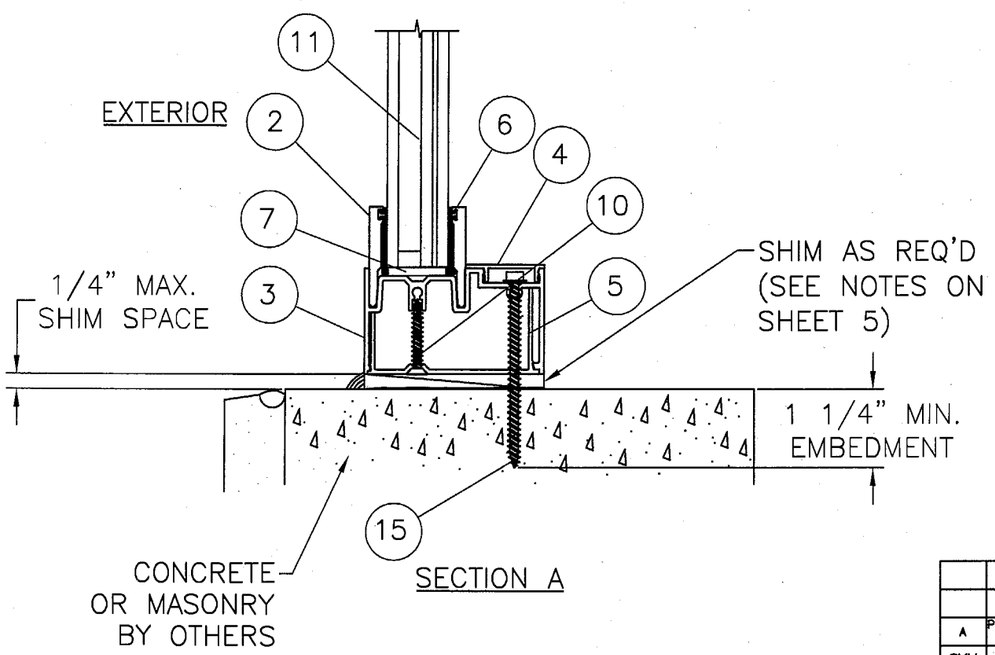

SECTION A

Approved as complying with the Florida Building Code
Date 06/09/05
NOA# 05-0214.02
Miami Dade Product Control Division
By

SYM	REVISION	DATE	BY
A	PER DADE LETTER DATED 3/22/05	4/06/05	BB

4/25/05
Eric S. Nielsen
Florida P. E. No. 41323
Product Technology Corporation
1150 Louisiana Ave., Suite 6
Winter Park, Florida 32789

WINDOOR, INC.
1978 STANHOME WAY ORLANDO, FL 32804

TITLE: SERIES 2000 PICTURE WINDOW LARGE MISSILE VERTICAL CROSS SECTIONS

PREPARED BY: PTC Product Technology Corporation
Phone 407.622.6334 Fax 407.622.6335

DRN:	DATE:
DRL	09/15/04
SCALE: N.T.S.	DWG. NO: WIND0085
REV: A	SHEET: 6 OF 10

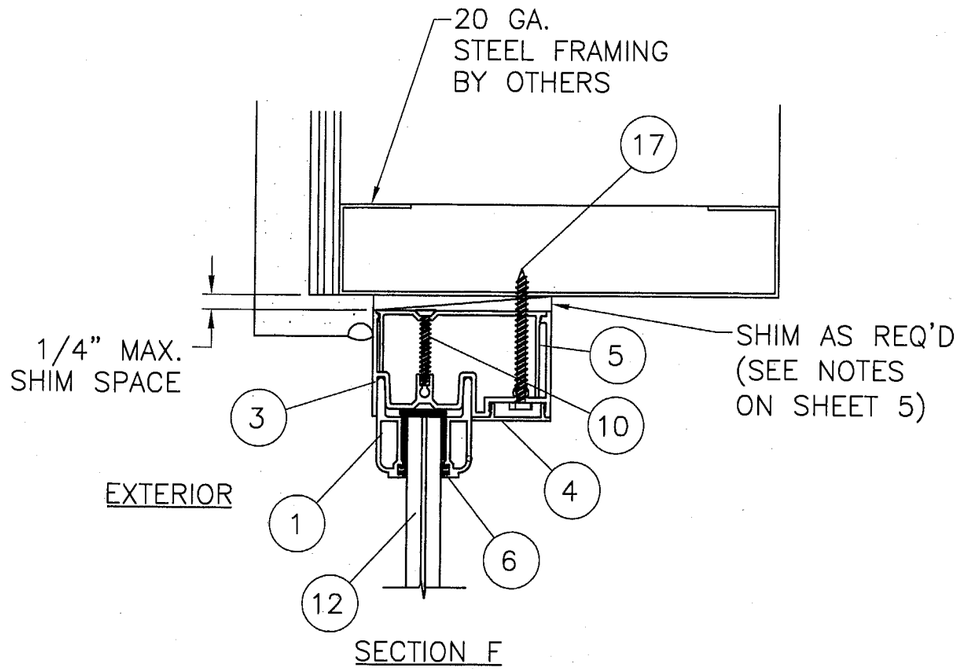

SECTION F

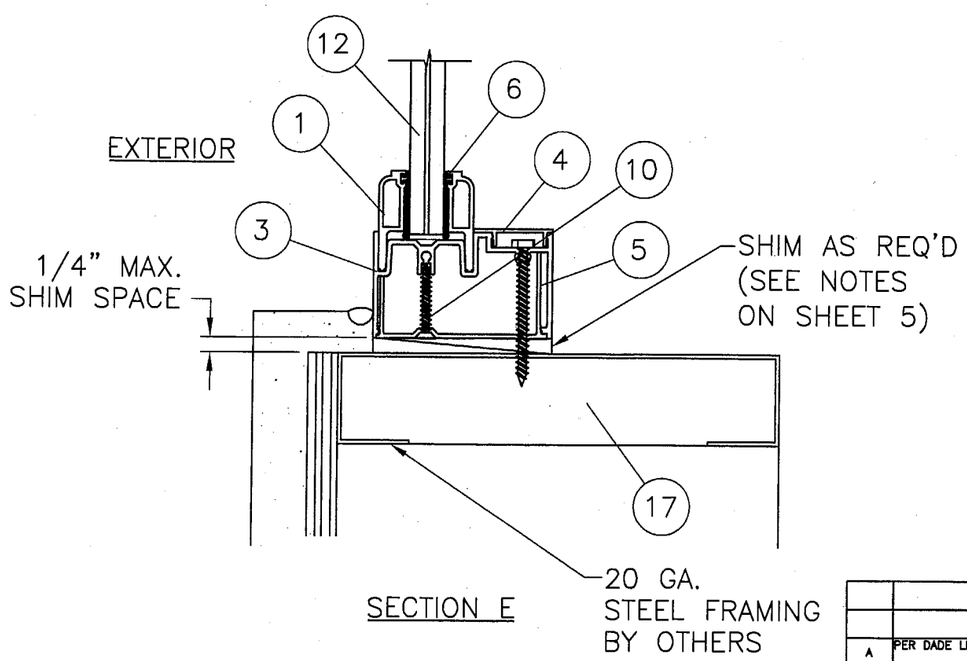

SECTION E

SYM	REVISION	DATE	BY
A	PER DADE LETTER DATED 3/22/05	4/06/05	BB

4/25/05

Eric S. Nielsen
Florida P. E. No. 41323
Product Technology Corporation
1150 Louisiana Ave., Suite 6
Winter Park, Florida 32789

Approved as complying with the Florida Building Code
Date 06/09/05
NOA# 03-0214.02
Miami Dade Product Control Division
By

WINDOOR, INC.
1978 STANHOME WAY ORLANDO, FL 32804

TITLE: SERIES 2000 PICTURE WINDOW LARGE MISSILE VERTICAL CROSS SECTIONS

PREPARED BY:
PTC
Product Technology Corporation
Phone 407.622.6334 Fax 407.622.6335

DRN:	DATE:
DRL	09/15/04
SCALE: N.T.S.	DWG. NO: WIND0085
REV: A	SHEET: 7 OF 10

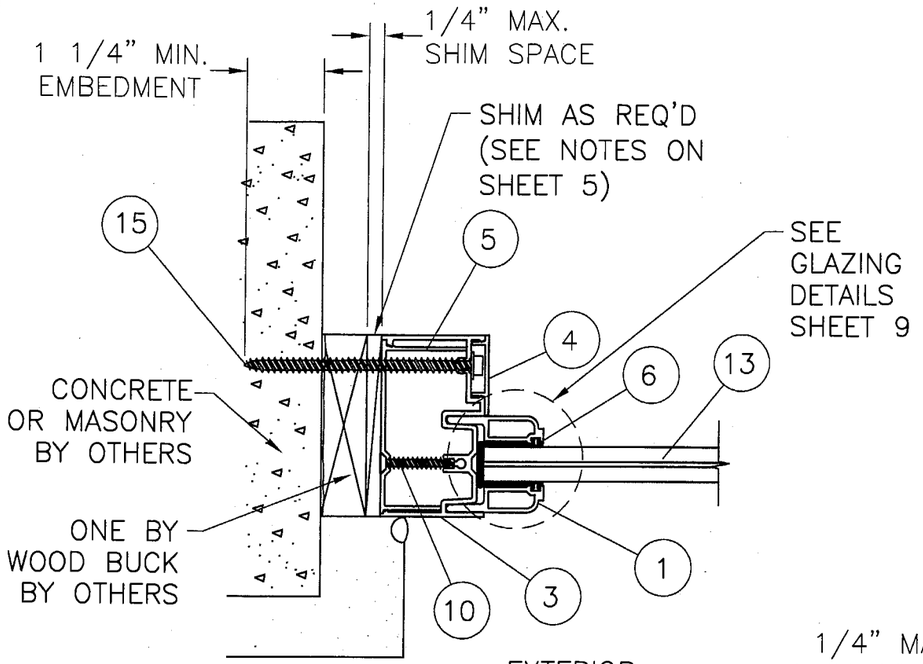

SECTION G

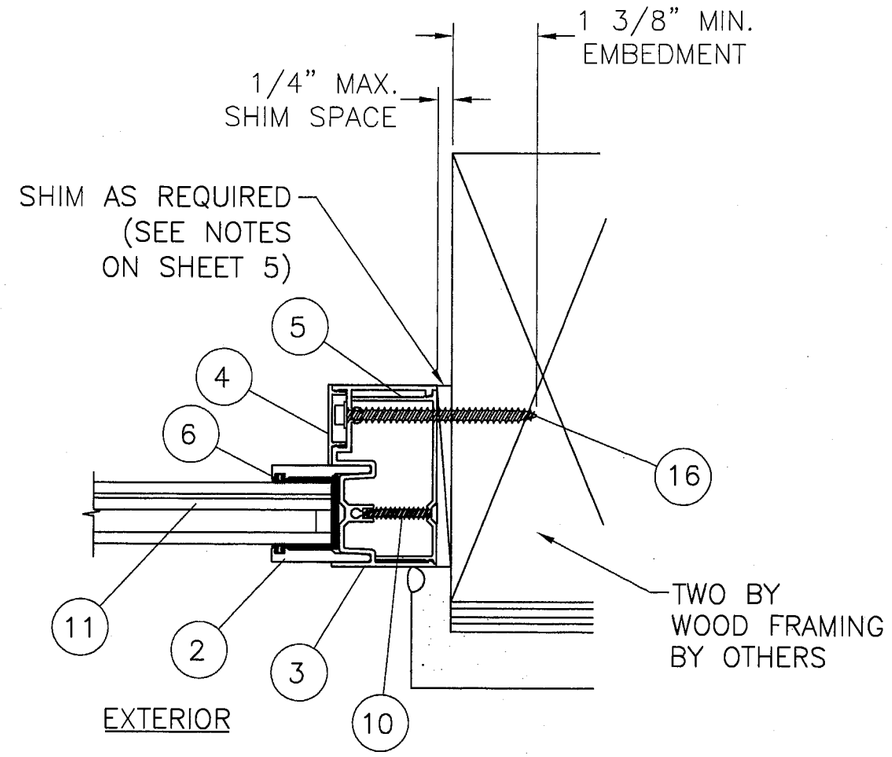

SECTION I

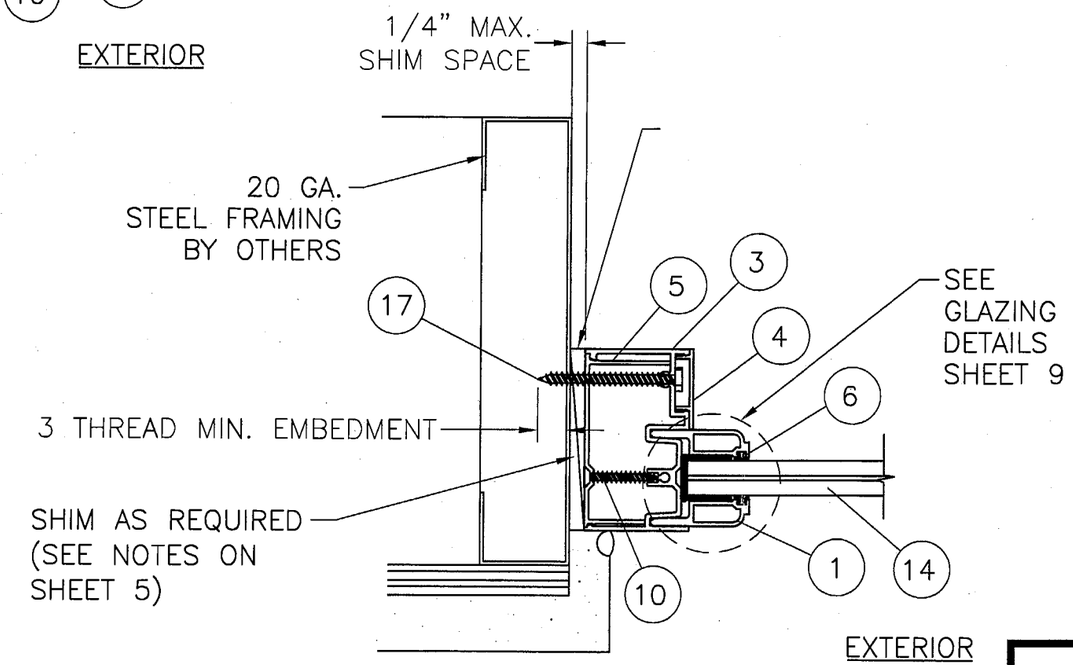

SECTION H

Approved as complying with the Florida Building Code
Date 06/09/05
NOA# 05-0214.02
Miami Dade Product Control Division
By

SYM	REVISION	DATE	BY
A	PER DADE LETTER DATED 3/22/05	4/06/05	BB

4/25/05
Eric S. Nielsen
Florida P. E. No. 41323
Product Technology Corporation
1150 Louisiana Ave., Suite 6
Winter Park, Florida 32789

WINDOOR, INC.
1978 STANHOME WAY ORLANDO, FL 32804

TITLE: SERIES 2000 PICTURE WINDOW LARGE MISSILE HORIZONTAL CROSS SECTIONS

PREPARED BY: PTC Product Technology Corporation
Phone 407.622.6334 Fax 407.622.6335

DRN:	DATE:
DRL	09/15/04
SCALE: N.T.S.	DWG. NO: WIND0085
REV: A	SHEET: 8 OF 10

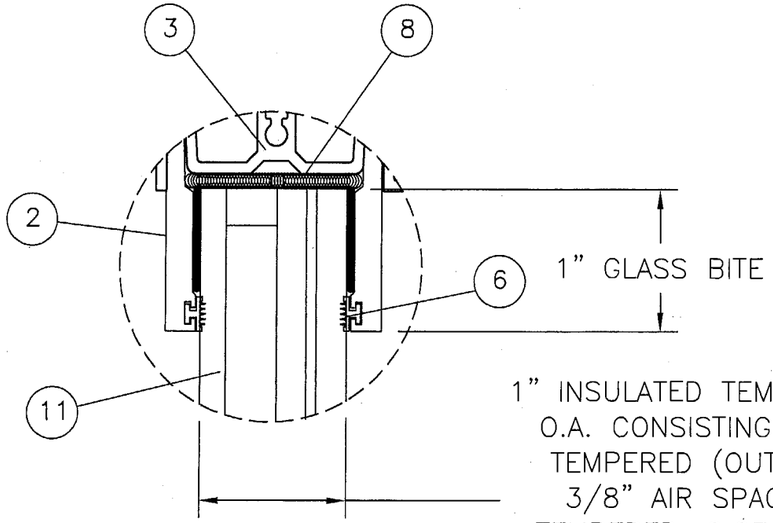

1" INSULATED TEMPERED GLASS O.A. CONSISTING OF: 3/16" TEMPERED (OUTSIDE LITE); 3/8" AIR SPACE; 3/16" TEMPERED; 0.075" VANCEVA; (VS02 INTERLAYER BY SOLUTIA, INC.) 3/16" TEMPERED (A)

GLAZING TYPE A

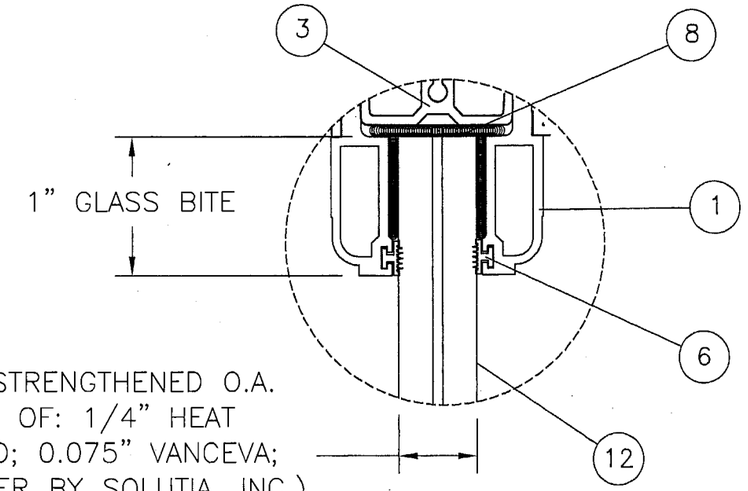

9/16" HEAT STRENGTHENED O.A. CONSISTING OF: 1/4" HEAT STRENGTHENED; 0.075" VANCEVA; (VS02 INTERLAYER BY SOLUTIA, INC.) 1/4" HEAT STRENGTHENED (A)

GLAZING TYPE B

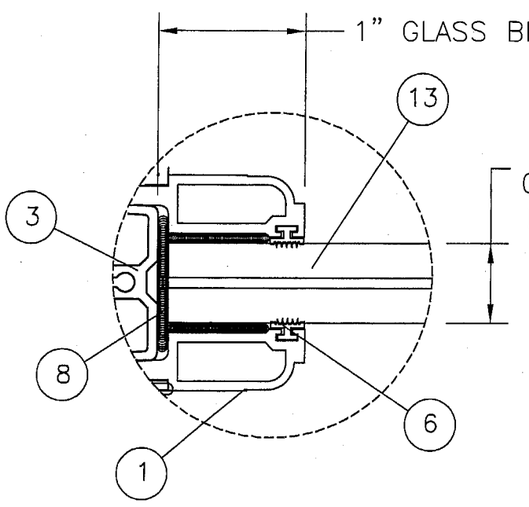

9/16" TEMPERED GLASS O.A. CONSISTING OF: 1/4" TEMPERED; 0.075" VANCEVA; (VS02 INTERLAYER BY SOLUTIA, INC.) 1/4" TEMPERED (A)

GLAZING TYPE C

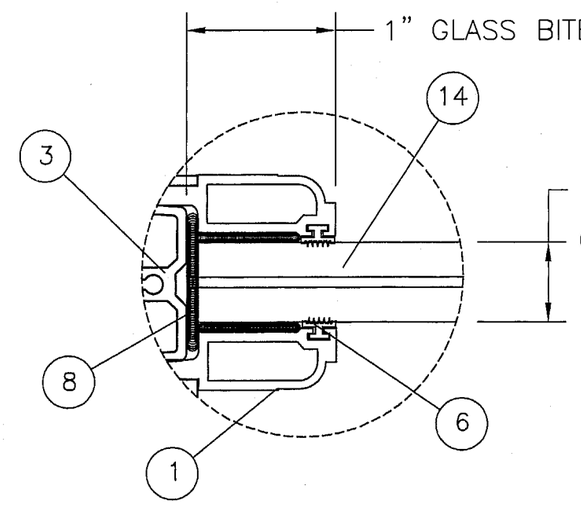

9/16" HEAT STRENGTHENED GLASS O.A. CONSISTING OF: 1/4" HEAT STRENGTHENED; 0.090" SENTRY GLAS PLUS; 1/4" HEAT STRENGTHENED

GLAZING TYPE D

Approved as complying with the Florida Building Code
Date 06/09/05
NOA# 05-0214.02
Miami Dade Product Control Division
By M Khalil

SYM	REVISION	DATE	BY
A	PER DADE LETTER DATED 3/22/05	4/06/05	BB

4/25/05
Eric S. Nielsen
Florida P. E. No. 41323
Product Technology Corporation
1150 Louisiana Ave., Suite 6
Winter Park, Florida 32789

WINDOOR, INC.
1978 STANHOME WAY ORLANDO, FL 32804

TITLE: SERIES 2000 PICTURE WINDOW LARGE MISSILE GLAZING DETAILS

PREPARED BY: PTC Product Technology Corporation
Phone 407.622.6334 Fax 407.622.6335

DRN:	DATE:
DRL	09/15/04
SCALE: N.T.S.	DWG. NO: WIND0085
REV: A	SHEET: 9 OF 10

BILL OF MATERIALS			MANUFACTURE
NO.	PART NO.	DESCRIPTION	KEYMARK
1	FS-01878	9/16" GLASS STOP EXTRUDED ALUMINUM	KEYMARK
2	FS-01880	1" GLASS STOP EXTRUDED ALUMINUM	KEYMARK
3	FS-02840	PICTURE WINDOW FRAME EXTRUDED ALUMINUM	KEYMARK
4	FS-02849	SCREW COVER EXTRUDED ALUMINUM	KEYMARK
5	FS-02837	FLAT FILTER EXTRUDED ALUMINUM	KEYMARK
6	TP-870	IMPACT GLASS STOP VINYL	
7	NSB 3/16-3/4-2	GLASS SETTING BLOCKS	
8	SIKA 552	SEALANT/ GLAZING COMPOUND	
9	#10 X 1 1/4 PH F SS 18-8	FRAME ASSEMBLY SCREWS	
10	#10 X 1 1/4 A SS 18-8	FLAT FILTER ASSEMBLY SCREWS	
11	INSULATED LARGE MISSILE GLASS	1" INSULATED O.A.: 3/16" TEMPERED (OUTSIDE LITE) ;3/8" AIR SPACE; 3/16" TEMPERED;0.075" VANCEVA; 3/16" TEMPERED; TYPE "A"	
12	LARGE MISSILE GLASS	9/16" HEAT STRENGTHENED O.A.: 1/4" HEAT STRENGTHENED; 0.075" VANCEVA; 1/4" HEAT STRENGTHENED; TYPE "B"	
13	LARGE MISSILE GLASS	9/16" TEMPERED O.A.: 1/4" TEMPERED; 0.075" VANCEVA; 1/4" TEMPERED TYPE "C"	
14	LARGE MISSILE GLASS	9/16" HEAT STRENGTHENED O.A.: 1/4" TEMPERED; 0.090" SENTRY GLAS PLUS; 1/4" TEMPERED; TYPE "D"	
15		1/4" DIA. RAWL TAPPER	RAWL
16		#14 WOOD SCREW	
17		#14 SELF TAPPING SHEET METAL SCREW	

1 9/16" GLASS STOP
TYP. WALL THICKNESS 0.070

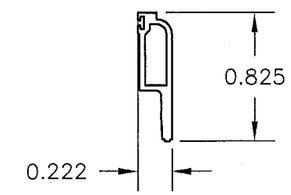

2 1" GLASS STOP
TYP. WALL THICKNESS 0.200

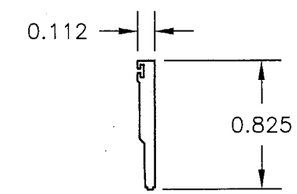

3 PICTURE WINDOW FRAME
TYP. WALL THICKNESS 0.060

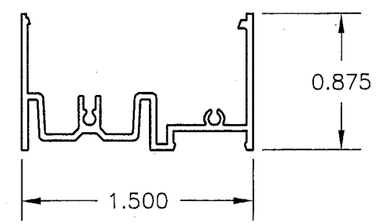

4 SCREW COVER
TYP. WALL THICKNESS 0.060

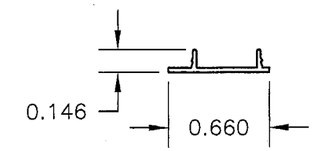

5 FLAT FILTER
TYP. WALL THICKNESS 0.075

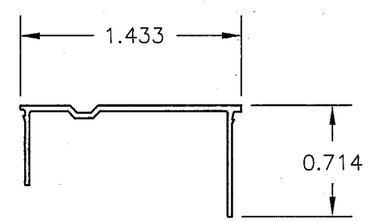

Approved as complying with the Florida Building Code
Date 06/09/05
NOA# 05-0214.02
Miami-Dade Product Control Division
By

SYM	REVISION	DATE	BY
A	PER DADE LETTER 3/22/05	4/06/05	BB

4/25/05
Eric S. Nielsen
Florida P. E. No. 41323
Product Technology Corporation
1150 Louisiana Ave., Suite 6
Winter Park, Florida 32789

WINDOOR, INC.
1978 STANHOME WAY ORLANDO, FL 32804

TITLE: SERIES 2000 PICTURE WINDOW LARGE MISSILE BILL OF MATERIALS

PREPARED BY: PTC Product Technology Corporation
Phone 407.622.6334 Fax 407.622.6335

DRN: DRL	DATE: 09/15/04
SCALE: N.T.S.	DWG. NO: WIND0085
REV: A	SHEET: 10 OF 10