MIAMI-DADE COUNTY, FLORIDA
METRO-DADE FLAGLER BUILDING

BUILDING CODE COMPLIANCE OFFICE (BCCO)
PRODUCT CONTROL DIVISION

140 WEST FLAGLER STREET, SUITE 1603
MIAMI, FLORIDA 33130-1563
(305) 375-2901 FAX (305) 375-2908
www.buildingcodeonline.com

NOTICE OF ACCEPTANCE (NOA)

Copper Sales, Inc.
1950 NW 18th Street
Pompano Beach, FL 33069

SCOPE:
This NOA is being issued under the applicable rules and regulations governing the use of construction materials. The documentation submitted has been reviewed by Miami-Dade County Product Control Division and accepted by the Board of Rules and Appeals (BORA) to be used in Miami Dade County and other areas where allowed by the Authority Having Jurisdiction (AHJ).

This NOA shall not be valid after the expiration date stated below. The Miami-Dade County Product Control Division (In Miami Dade County) and/or the AHJ (in areas other than Miami Dade County) reserve the right to have this product or material tested for quality assurance purposes. If this product or material fails to perform in the accepted manner, the manufacturer will incur the expense of such testing and the AHJ may immediately revoke, modify, or suspend the use of such product or material within their jurisdiction. BORA reserves the right to revoke this acceptance, if it is determined by Miami-Dade County Product Control Division that this product or material fails to meet the requirements of the applicable building code.

This product is approved as described herein, and has been designed to comply with the Florida Building Code, including the High Velocity Hurricane Zone.

DESCRIPTION: Copper Sales Snap Lock UC9 and UC11 Metal Roofing Panels

LABELING: Each unit shall bear a permanent label with the manufacturer's name or logo, city, state and the following statement: "Miami-Dade County Product Control Approved", unless otherwise noted herein.

RENEWAL of this NOA shall be considered after a renewal application has been filed and there has been no change in the applicable building code negatively affecting the performance of this product.

TERMINATION of this NOA will occur after the expiration date or if there has been a revision or change in the materials, use, and/or manufacture of the product or process. Misuse of this NOA as an endorsement of any product, for sales, advertising or any other purposes shall automatically terminate this NOA. Failure to comply with any section of this NOA shall be cause for termination and removal of NOA.

ADVERTISEMENT: The NOA number preceded by the words Miami-Dade County, Florida, and followed by the expiration date may be displayed in advertising literature. If any portion of the NOA is displayed, then it shall be done in its entirety.

INSPECTION: A copy of this entire NOA shall be provided to the user by the manufacturer or its distributors and shall be available for inspection at the job site at the request of the Building Official.

This **NOA revises NOA #02-1029.01** and consists of pages 1 through 7.
The submitted documentation was reviewed by Jorge L. Acebo

ROOFING SYSTEM APPROVAL:

Category:	Roofing
Sub-Category:	Metal, Panels (Non-Structural)
Material:	Steel
Deck Type:	Wood
Maximum Design Pressure	-108 psf

TRADE NAMES OF PRODUCTS MANUFACTURED OR LABELED BY APPLICANT:

Product	Dimensions	Test Specifications	Product Description
Snap Lock UC9 Panel	l = various w = 13" thru 21" h = 1" min. 24 gage 0.024" thick		Corrosion resistant, galvalume or galvanized, preformed, standing seam, coated, prefinished, metal panels.
Snap Lock UC11 Panel	l = various w = 12" thru 21" h = 1" min. 24 gage 0.029" thick		Corrosion resistant, galvalume or galvanized, preformed, standing seam, coated, prefinished, metal panels.
Trim Pieces	l = varies w = varies min. 24 gage.		Standard flashing and trim pieces, corrosion resistant galvalume or galvanized.
Panel Clips	min. 0.024" thick x 10' long x 1-3/8" wide x 1" high		Corrosion resistant, formed, plated continuous steel clips for metal panel installation

TRADE NAMES OF PRODUCTS MANUFACTURED BY OTHERS:

Product	Dimensions	Product Description	Manufacturer
Fasteners	min. #10 coarse thread wood screw.	Corrosion resistant, pancake head, self-drilling, self-threading screws	generic
Pop rivets	#42	Stainless Steel blind pop rivets	generic
Sealant	N/A	Sealant for use at foam closure strip.	generic

EVIDENCE SUBMITTED:

Test Agency	Test Identifier	Test Name/Report	Date
The Glidden Co.	Technical Literature	Salt Spray ASTM B 117	January 1993
The Glidden Co.	Technical Literature	Accelerated Weathering ASTM G 23	January 1993
Celotex Corporation Testing Services	520303	TAS 100	July 1999
Hurricane Test Laboratory, Inc.	0182-0420-99 0182-0718-99	TAS 125	September 1999
Celotex Corporation Testing Services	520303b	TAS 100	October 1999
Hurricane Test Laboratory, Inc.	0182-0818-01 0227-0517-04 0227-0903-04 0227-1026-04	TAS 125	September 2001 01/14/05

APPROVED ASSEMBLIES

SYSTEM A-1: UC9-13 through UC9-21 Snap Lock Panels

Deck Type: Wood, Non-insulated

Deck Description: New Construction $^{19}/_{32}$" or greater plywood or wood plank.

Slope Range: 2":12" or greater

Maximum Uplift Pressure: The maximum allowable uplift pressure for the 13" through 21" wide panels shall be -93 psf. (See System Limitation #1)

Deck Attachment: In accordance with applicable Building Code, but in no case shall it be less than 8d annular ring shank nails spaced 6" o.c. In reroofing, where the deck is less than $^{19}/_{32}$" thick (Minimum $^{15}/_{32}$") The above attachment method must be in addition to existing attachment.

Underlayment: Minimum underlayment shall be an ASTM D 226 Type II installed with a minimum 4" side-lap and 6" end-laps. Underlayment shall be fastened with corrosion resistant tin-caps and 12 gauge 1 ¼" annular ring-shank nails, spaced 6" o.c. at all laps and two staggered rows 12" o.c. in the field of the roll. Or any approved underlayment having a current NOA.

Valleys: Valley construction shall be in compliance with Roofing Application Standard RAS 133 and with the current published installation instructions and details in Copper Sales' Installation Manual.

Fire Barrier Board: Any approved fire barrier having a current NOA. For class A or B fire rating, install minimum ¼" thick Georgia Pacific "Dens Deck" (with current NOA) or minimum 4mm thick of Tritex, RockRoof (with current NOA) or $^{5}/_{8}$" water resistant type X gypsum sheathing with treated core and facer.

Metal Panels and Accessories: Install the "Snap Lock UC9-13" through "Snap Lock UC9-21" and accessories in compliance with the current published installation instructions and details in Copper Sales' Installation Manual. Flashings, penetrations, valley construction and other details shall be constructed in compliance with Roofing Application Standard RAS 133.

1. At the eave, rake, and ridge, fasteners shall be located not more than 1" away from the panel end.
2. Panels shall be installed with approved continuous clips (1" x $1^{3}/_{8}$"x 10' long sections), attached to substrate with one corrosion resistant #10 screw of sufficient length to penetrate through the sheathing a minimum of $^{3}/_{16}$", at a spacing not exceed 16" o.c. parallel to the slope of the roof.

SYSTEM A-2:	UC11-12 through UC11-21 Snap Lock Panels
Deck Type:	Wood, Non-insulated
Deck Description:	New Construction $^{19}/_{32}$" or greater plywood or wood plank.
Slope Range:	2":12" or greater
Maximum Uplift Pressure:	The maximum allowable uplift pressure for the 13" through 21" wide panels shall be –108 psf. (See System Limitation #1)
Deck Attachment:	In accordance with applicable Building Code, but in no case shall it be less than 8d annular ring shank nails spaced 6" o.c. In reroofing, where the deck is less than $^{19}/_{32}$" thick (Minimum $^{15}/_{32}$") The above attachment method must be in addition to existing attachment.
Underlayment:	Minimum underlayment shall be an ASTM D 226 Type II installed with a minimum 4" side-lap and 6" end-laps. Underlayment shall be fastened with corrosion resistant tin-caps and 12 gauge 1 ¼" annular ring-shank nails, spaced 6" o.c. at all laps and two staggered rows 12" o.c. in the field of the roll. Or any approved underlayment having a current NOA.
Valleys:	Valley construction shall be in compliance with Roofing Application Standard RAS 133 and with the current published installation instructions and details in Copper Sales' Installation Manual.
Fire Barrier Board:	Any approved fire barrier having a current NOA. For class A or B fire rating, install minimum ¼" thick Georgia Pacific "Dens Deck" (with current NOA) or minimum 4mm thick of Tritex, RockRoof (with current NOA) or $^{5}/_{8}$" water resistant type X gypsum sheathing with treated core and facer.
Metal Panels and Accessories:	Install the "Snap Lock UC11-12" through "Snap Lock UC11-21" and accessories in compliance with the current published installation instructions and details in Copper Sales' Installation Manual. Flashings, penetrations, valley construction and other details shall be constructed in compliance with Roofing Application Standard RAS 133. 1. At the eave, rake, and ridge, fasteners shall be located not more than 1" away from the panel end. 2. Panels shall be fastened to substrate at the male end with one corrosion resistant #10 screw of sufficient length to penetrate through the sheathing a minimum of $^{3}/_{16}$", at a spacing not exceed 16" o.c. parallel to the slope of the roof. (See detail herein)

UC9-13 THROUGH UC9-21 SNAP LOCK

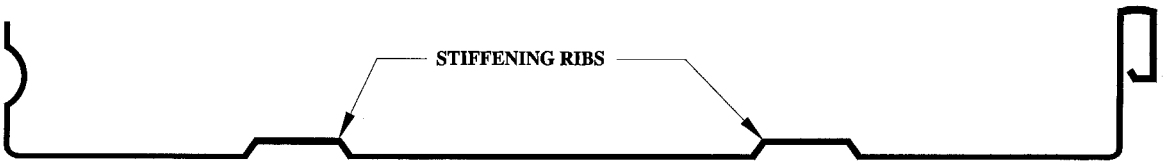

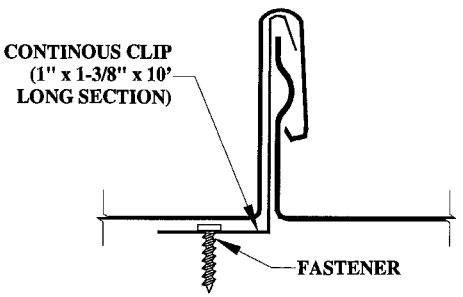

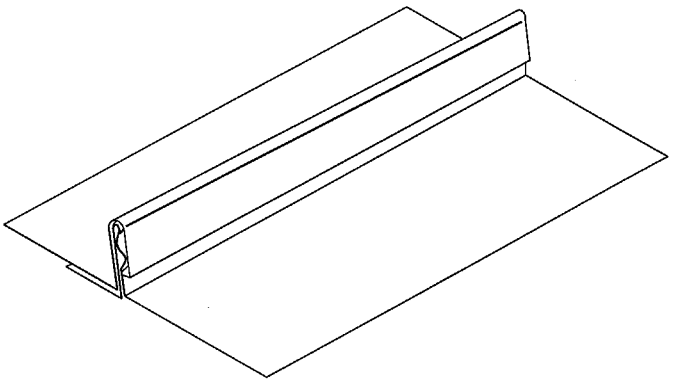

Profile Drawings (Continued)

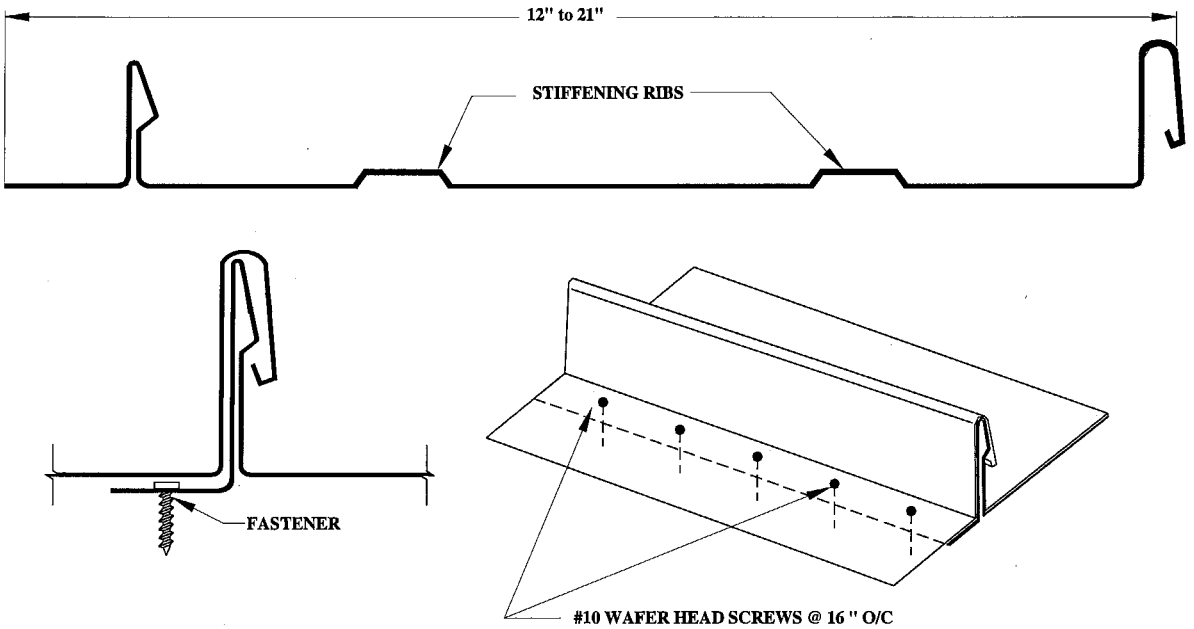

UC11-12 THROUGH UC11-21 SNAP LOCK

SYSTEM LIMITATIONS

1. The maximum designed pressure limitation listed shall be applicable to all roof pressure zones (i.e. field, perimeters, and corners). Neither rational analysis, nor extrapolation shall be permitted for enhanced fastening at enhanced pressure zones (i.e. perimeters, extended corners and corners). The maximum fastener spacing noted in the "Systems Description" section of this approval shall not be exceeded.

2. Panel shall be roll formed in continuous lengths from eave to ridge. Maximum lengths shall be described in the Roofing Application Protocol RAS 133.

3. All panels shall be permanently labeled with the manufacturer's name and/or logo, and the following statement: "Miami-Dade County Product Control Approved.

END OF THIS ACCEPTANCE