MIAMI-DADE COUNTY

BUILDING CODE COMPLIANCE OFFICE (BCCO)
PRODUCT CONTROL DIVISION

MIAMI-DADE COUNTY, FLORIDA
METRO-DADE FLAGLER BUILDING
140 WEST FLAGLER STREET, SUITE 1603
MIAMI, FLORIDA 33130-1563
(305) 375-2901 FAX (305) 375-2908
www.buildingcodeonline.com

NOTICE OF ACCEPTANCE (NOA)

Crawford Tracy Corporation
3301 S. W. 13 th Drive
DeerField Beach, Fl. 33442

SCOPE:
This NOA is being issued under the applicable rules and regulations governing the use of construction materials. The documentation submitted has been reviewed by Miami-Dade County Product Control Division and accepted by the Board of Rules and Appeals (BORA) to be used in Miami Dade County and other areas where allowed by the Authority Having Jurisdiction (AHJ).

This NOA shall not be valid after the expiration date stated below. The Miami-Dade County Product Control Division (In Miami Dade County) and/or the AHJ (in areas other than Miami Dade County) reserve the right to have this product or material tested for quality assurance purposes. If this product or material fails to perform in the accepted manner, the manufacturer will incur the expense of such testing and the AHJ may immediately revoke, modify, or suspend the use of such product or material within their jurisdiction. BORA reserves the right to revoke this acceptance, if it is determined by Miami-Dade County Product Control Division that this product or material fails to meet the requirements of the applicable building code.

This product is approved as described herein, and has been designed to comply with the Florida Building Code, including the High Velocity Hurricane Zone of the Florida Building Code.

DESCRIPTION: Series "Pro-Tech 7SG " Aluminum Glazed Curtain Wall System–LM Impact

APPROVAL DOCUMENT: Drawing No. **W04-78**, titled "Pro-Tech 7SG Alum Curtain Wall System (LMI)" Sheets 1 through 13 of 13, dated 05/25/04 and last revised on 02-09-2006, prepared by Al-Farooq Corporation, signed and sealed by Dr. Humayoun Farooq, P. E., bearing the Miami-Dade County Product Control Approval stamp with the Notice of Acceptance number and approval date by the Miami-Dade County Product Control Division.

MISSILE IMPACT RATING: Large Missile Impact Resistant

LABELING: Each unit shall bear a permanent label with the manufacturer's name or logo, city, state and following statement: "Miami-Dade County Product Control Approved", unless otherwise noted herein.

RENEWAL of this NOA shall be considered after a renewal application has been filed and there has been no change in the applicable building code negatively affecting the performance of this product.

TERMINATION of this NOA will occur after the expiration date or if there has been a revision or change in the materials, use, and/or manufacture of the product or process. Misuse of this NOA as an endorsement of any product, for sales, advertising or any other purposes shall automatically terminate this NOA. Failure to comply with any section of this NOA shall be cause for termination and removal of NOA.

ADVERTISEMENT: The NOA number preceded by the words Miami-Dade County, Florida, and followed by the expiration date may be displayed in advertising literature. If any portion of the NOA is displayed, then it shall be done in its entirety.

INSPECTION: A copy of this entire NOA shall be provided to the user by the manufacturer or its distributors and shall be available for inspection at the job site at the request of the Building Official.
This NOA consists of this page 1 and evidence page E-1, as well as approval document mentioned above.
The submitted documentation was reviewed by **Ishaq I. Chanda, P.E.**

PRODUCT CONTROL ACCEPTED

NOA No 05-0301.03
Expiration Date: March 02, 2011
Approval Date: March 02 2006

2/10/06

Crawford Tracy Corporation.

NOTICE OF ACCEPTANCE: EVIDENCE SUBMITTED

A. DRAWINGS

1. Manufacturer's die drawings and sections.
2. Drawing No. **W04-78**, titled "Pro-Tech 7SG Alum Curtain Wall System (LMI)" Sheets 1 thru 13 of 13, dated 05/25/04 and last revised on 02-09-2006, prepared by Al-Farooq Corporation, signed & sealed by Dr. Humayoun Farooq, P. E.

B. TESTS

1. Test reports on
   1) Air Infiltration Test, per TAS 202-94
   2) Uniform Static Air Pressure Test, Loading per TAS 202-94
   3) Water Resistance Test, per TAS 202-94
   4) Large Missile Impact Test, TAS 201-94
   5) Small Missile Impact Test, TAS 201-94
   6) Cyclic Loading Test, per TAS 203-94

   Along with installation diagram of aluminum glazed curtain wall system marked-up by American Test Lab of South Florida, Test Report No. **ATL 0315.01-04 (LMI)** dated 08-19-04 and **ATL 0217.01-04 (SMI)** dated 08-23-04 and revised by addendum letter dated 01-30-06, both signed and sealed by William R. Mehner, P.E. & Henry Hatem, P. E.
2. Additional Test reports on
   1) Uniform Static Air Pressure Test, Loading per TAS 202-94
   2) Large Missile Impact Test, TAS 201-94
   3) Small Missile Impact Test, TAS 201-94
   4) Cyclic Loading Test, per TAS 203-94

   Along with installation diagram of aluminum glazed curtain wall system marked-up by American Test Lab of South Florida, Test Report No. **ATL 1129.01-04 (LMI)** dated 08-19-04, revised by addendum letter dated 01-30-06 and Test Report No. **ATL 0419.02-04 (SMI)**, dated 08-19-04, both signed & sealed by William R. Mehner, P.E. & Henry Hatem, P. E.

C. CALCULATIONS:

1. Anchor calculations and structural analysis, dated 12-21-04 and revised on 02-09-2006 & 02-21-2006, prepared by Al-Farooq Corporation, signed and sealed by Dr. Humayoun Farooq, P. E.

D. QUALITY ASSURANCE BY:

1. Miami-Dade County Code Compliance Office (BCCO)

E. MATERIAL CERTIFICATIONS

1. Notice of Acceptance No. **01-1204.01** issued to E. I. DuPont DeNumours for "Sentry Glaa® Plus", expiring on 01/14/07.
2. Notice of Acceptance No. **03-0415.13** issued to Solutia Inc. for ".Vanceva Composite used for lamination of glass", expiring on 12/11/08

F. STATEMENTS

1. Statement letter of conformance, dated 08-23-05, signed by Dr. Humayoun Farooq, P. E.
2. Statement letter of "No financial interest", dated 10-17-05, signed by Dr. Humayoun Farooq, P. E.
3. Letters of compliance, (statements of compliance stated in above test reports)

G. OTHER

1. Test proposal from ATLSF dated 11/06/2003, approved by BCCO.

Ishaq I. Chanda

Ishaq I. Chanda, P.E.
Product Control Examiner
NOA No 05-0301.03
Expiration Date: March 02, 2011
Approval Date: March 02, 2006

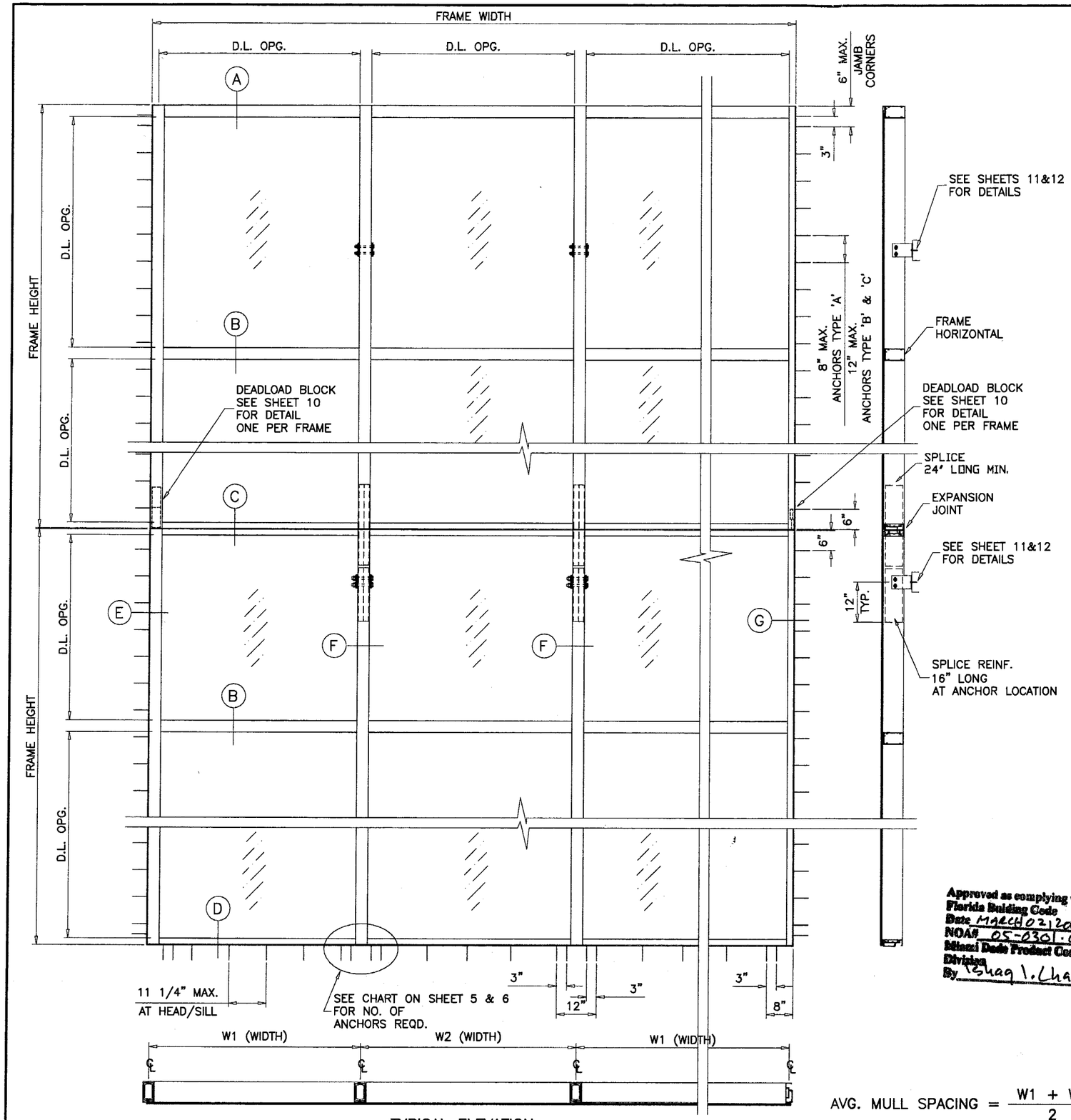

TYPICAL ELEVATION

AVG. MULL SPACING = $\frac{W1 + W2}{2}$

PRO-TECH 7SG ALUM CURTAIN WALL SYSTEM

CURTAIN WALL SYSTEM IS RATED FOR LARGE MISSILE IMPACT.
SHUTTERS ARE NOT REQD.
SEE SHEETS 2 THRU 6 FOR DESIGN LOAD RATING.

CODE REQUIREMENTS FOR SAFEGUARDS MUST BE OBSERVED.

THIS PRODUCT HAS BEEN DESIGNED AND TESTED TO COMPLY WITH THE REQUIREMENTS OF THE FLORIDA BUILDING CODE 2004 EDITION INCLUDING HIGH VELOCITY HURRICANE ZONE.

WOOD BUCKS BY OTHERS, MUST BE ANCHORED PROPERLY TO TRANSFER LOADS TO THE STRUCTURE.

ANCHORS SHALL BE AS LISTED, SPACED AS SHOWN ON DETAILS, ANCHORS EMBEDMENT TO BASE MATERIAL SHALL BE BEYOND WALL DRESSING OR STUCCO.

ANCHORING OR LOADING CONDITIONS NOT SHOWN IN THESE DETAILS ARE NOT PART OF THIS APPROVAL.

A LOAD DURATION INCREASE IN ALLOWABLE STRESS IS USED IN DESIGN OF WOOD ANCHORS ONLY.

ALL STEEL IN CONTACT WITH ALUMINUM TO BE PAINTED OR PLATED.

INSTRUCTIONS:

USE CHARTS AS FOLLOWS.

STEP 1 DETERMINE DESIGN WIND LOAD REQUIREMENT BASED ON WIND VELOCITY, BLDG. HEIGHT, WIND ZONE USING APPLICABLE ASCE 7 STANDARD.

STEP 2 CHECK MULLION CAPACITY FOR A GIVEN SPACING AND HEIGHT USING CHARTS ON SHEET 2 FOR SINGLE SPANS, AND CHARTS ON SHEET 3 FOR EQUAL MULTIPLE SPANS.

STEP 3 SEE CHARTS ON SHEETS 4 & 4A FOR DESIGN LOAD CAPACITY OF DESIRED GLASS SIZE BASED ON APPLICABLE WIND DURATION.

STEP 4 USING CHART ON SHEET 5 & 6 SELECT ANCHOR OPTION WITH DESIGN RATING MORE THAN DESIGN LOAD SPECIFIED IN STEP 1 ABOVE.

STEP 5 THE LOWEST VALUE RESULTING FROM STEPS 2, 3 AND 4 SHALL APPLY TO ENTIRE SYSTEM.

LAMINATED GLASS
LARGE MISSILE IMPACT

Approved as complying with the Florida Building Code
Date MARCH 02, 2006
NOA# 05-0301.03
Miami Dade Product Control Division
By Shaq I. Chanda

Engr: DR. HUMAYOUN FAROOQ
STRUCTURES
FLA. PE # 16557
C.A.N. 3538

FEB 09 2006

AL-FAROOQ CORPORATION
ENGINEERS, PLANNERS & PRODUCT DESIGN
1235 SW 87 AVE
MIAMI, FLORIDA 33174
TEL. (305) 264-8100 FAX. (305) 262-6978
STORE\W04-78CTC

PRO-TECH 7SG ALUM CURTAIN WALL SYSTEM (L.M.I.)

CRAWFORD TRACEY CORPORATION
3301 SW 13TH DRIVE
DEERFIELD BEACH, FL. 33442-8101
TEL. (954) 698-6888 FAX. (954) 698-6889

revisions:

no	date	by	description
A	09.16.05		REV. PER BCCO COMMENTS
B	02.08.06		REV. PER BCCO COMMENTS

date: 05-25-04
scale: 3/8"=1'-0"
dr. by: HAMID
chk. by:

drawing no.
W04-78

MULLION LOAD CAPACITY – PSF
SINGLE SPANS (WITH OR WITHOUT INTERMEDIATE HORIZONTALS)

NOMINAL DIMS.		UNREINFORCED	ALUM REINF.	STEEL REINF.
WIDTH (W)	FRAME HEIGHT	EXT.(+) & INT.(–)	EXT.(+) & INT.(–)	EXT.(+) & INT.(–)
36"	120"	120.0	120.0	120.0
39"		120.0	120.0	120.0
42"		120.0	120.0	120.0
45"		120.0	120.0	120.0
48"		120.0	120.0	120.0
51"		120.0	120.0	120.0
54"		120.0	120.0	120.0
57"		120.0	120.0	120.0
60"		100.0	120.0	120.0
63"		–	120.0	120.0
66"		–	120.0	120.0
69"		–	120.0	120.0
72"		–	120.0	120.0
36"	126"	–	120.0	120.0
39"		–	120.0	120.0
42"		–	120.0	120.0
45"		–	120.0	120.0
48"		–	120.0	120.0
51"		–	120.0	120.0
54"		–	120.0	120.0
57"		–	120.0	120.0
60"		–	120.0	120.0
63"		–	120.0	120.0
66"		–	120.0	120.0
69"		–	120.0	120.0
72"		–	120.0	120.0
36"	132"	–	120.0	120.0
39"		–	120.0	120.0
42"		–	120.0	120.0
45"		–	120.0	120.0
48"		–	120.0	120.0
51"		–	120.0	120.0
54"		–	120.0	120.0
57"		–	120.0	120.0
60"		–	120.0	120.0
63"		–	120.0	120.0
66"		–	114.6	120.0
69"		–	109.6	120.0
72"		–	105.0	120.0
36"	138"	–	120.0	120.0
39"		–	120.0	120.0
42"		–	120.0	120.0
45"		–	120.0	120.0
48"		–	120.0	120.0
51"		–	120.0	120.0
54"		–	120.0	120.0
57"		–	116.1	120.0
60"		–	110.3	120.0
63"		–	105.1	120.0
66"		–	100.3	120.0
69"		–	95.9	120.0
72"		–	91.9	118.7

MULLION LOAD CAPACITY – PSF
SINGLE SPANS (WITH OR WITHOUT INTERMEDIATE HORIZONTALS)

NOMINAL DIMS.		UNREINFORCED	ALUM REINF.	STEEL REINF.
WIDTH (W)	FRAME HEIGHT	EXT.(+) & INT.(–)	EXT.(+) & INT.(–)	EXT.(+) & INT.(–)
36"	144"	–	120.0	120.0
39"		–	120.0	120.0
42"		–	120.0	120.0
45"		–	120.0	120.0
48"		–	120.0	120.0
51"		–	114.2	120.0
54"		–	107.9	120.0
57"		–	102.2	120.0
60"		–	97.1	120.0
63"		–	92.5	120.0
66"		–	88.3	118.9
69"		–	84.4	113.7
36"	150"	–	120.0	120.0
39"		–	120.0	120.0
42"		–	120.0	120.0
45"		–	114.5	120.0
48"		–	107.4	120.0
51"		–	101.1	120.0
54"		–	95.4	120.0
57"		–	90.4	120.0
60"		–	85.9	120.0
63"		–	81.8	114.8
66"		–	78.1	109.6
36"	156"	–	120.0	120.0
39"		–	117.5	120.0
42"		–	109.1	120.0
45"		–	101.8	120.0
48"		–	95.5	120.0
51"		–	89.8	120.0
54"		–	84.8	120.0
57"		–	80.4	117.3
60"		–	76.4	111.5
63"		–	72.7	106.1
36"	162"	–	113.6	120.0
39"		–	104.9	120.0
42"		–	97.4	120.0
45"		–	90.9	120.0
48"		–	85.2	120.0
51"		–	80.2	120.0
54"		–	75.8	114.8
57"		–	71.8	108.8
60"		–	68.2	103.4
36"	168"	–	101.9	120.0
39"		–	94.1	120.0
42"		–	87.3	120.0
45"		–	81.5	120.0
48"		–	76.4	120.0
51"		–	71.9	113.1
54"		–	67.9	106.8
57"		–	64.4	101.2
60"		–	61.1	96.1

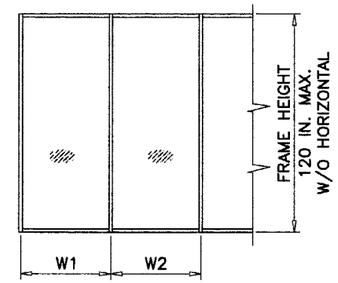

WIDTH (W) = W1
AT FRAME JAMB

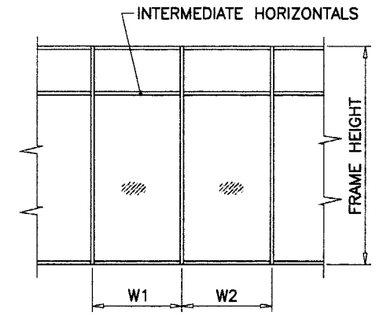

WIDTH (W) = $\frac{W1 + W2}{2}$
AT FRAME MULLION

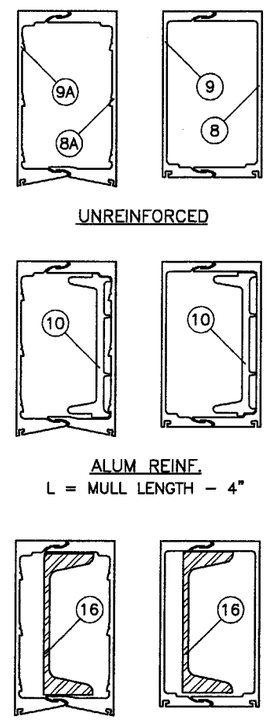

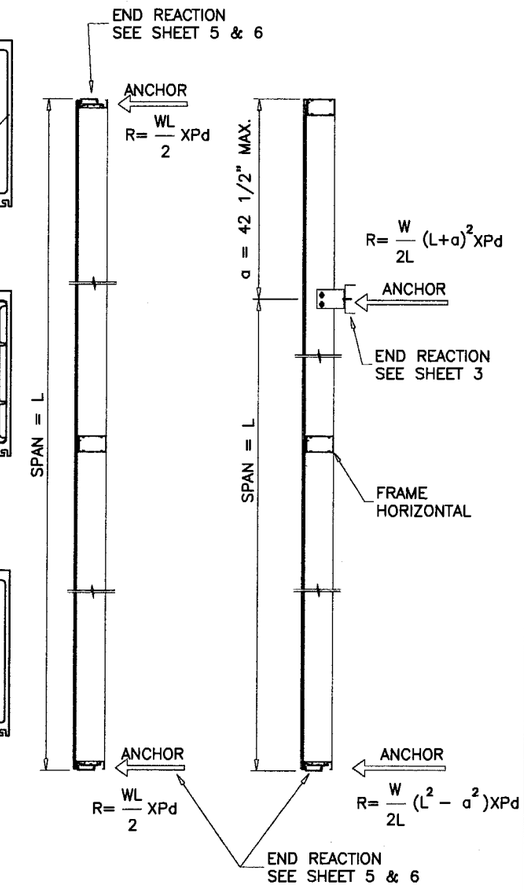

Approved as complying with the Florida Building Code
Date MARCH 02, 2006
NOA# 05-0301.03
Miami Dade Product Control Division
By Shaq I. Chand

Engr: DR. HUMAYOUN FAROOQ
STRUCTURES
FLA. PE # 16557
C.A.N. 3538

FEB 09 2006

AL-FAROOQ CORPORATION
ENGINEERS, PLANNERS & PRODUCT DESIGN
1235 SW 87 AVE
MIAMI, FLORIDA 33174
TEL. (305) 264-8100 FAX. (305) 262-6978
STORE\W04-78CTC

PRO-TECH TSG ALUM CURTAIN WALL SYSTEM (L.M.I.)

CRAWFORD TRACEY CORPORATION
3301 SW 13TH DRIVE
DEERFIELD BEACH, FL. 33442-8101
TEL. (954) 698-6888 FAX. (954) 698-6889

revisions:

no	date	by	description
A	09.16.05		REV. PER BCCO COMMENTS
B	02.08.06		REV. PER BCCO COMMENTS

date: 05-25-04
scale: 3/8"=1'-0"
dr. by: HAMID
chk. by:

drawing no.
W04-78

MULLION LOAD CAPACITY - PSF
MULTIPLE SPANS

AVG. MULL SPACING	SPAN = L	UNREINFORCED EXT.(+)/INT.(−)	ALUM REINF. EXT.(+)/INT.(−)
36"	120"	120.0	120.0
42"		120.0	120.0
48"		120.0	120.0
54"		120.0	120.0
60"		116.7	120.0
66"		106.1	120.0
72"		97.2	120.0
36"	126"	120.0	120.0
42"		120.0	120.0
48"		120.0	120.0
54"		120.0	120.0
60"		110.1	120.0
66"		100.1	120.0
72"		91.7	114.7
36"	132"	120.0	120.0
42"		120.0	120.0
48"		120.0	120.0
54"		116.0	120.0
60"		104.4	120.0
66"		94.9	118.7
72"		87.0	108.8
36"	138"	120.0	120.0
42"		120.0	120.0
48"		120.0	120.0
54"		110.3	120.0
60"		99.3	120.0
66"		90.3	112.9
72"		82.8	103.5
36"	144"	120.0	120.0
42"		120.0	120.0
48"		118.4	120.0
54"		105.2	120.0
60"		94.7	118.4
66"		86.1	107.6
36"	150"	120.0	120.0
42"		120.0	120.0
48"		113.2	120.0
54"		100.6	120.0
60"		90.5	113.2
66"		82.3	102.9
36"	156"	120.0	120.0
42"		120.0	120.0
48"		108.4	120.0
54"		96.3	120.0
60"		86.7	108.4
36"	162"	120.0	120.0
42"		118.9	120.0
48"		104.0	120.0
54"		92.5	115.6
60"		83.2	104.0
36"	168"	120.0	120.0
42"		113.6	120.0
48"		99.4	120.0
54"		88.4	110.9
60"		79.5	99.8

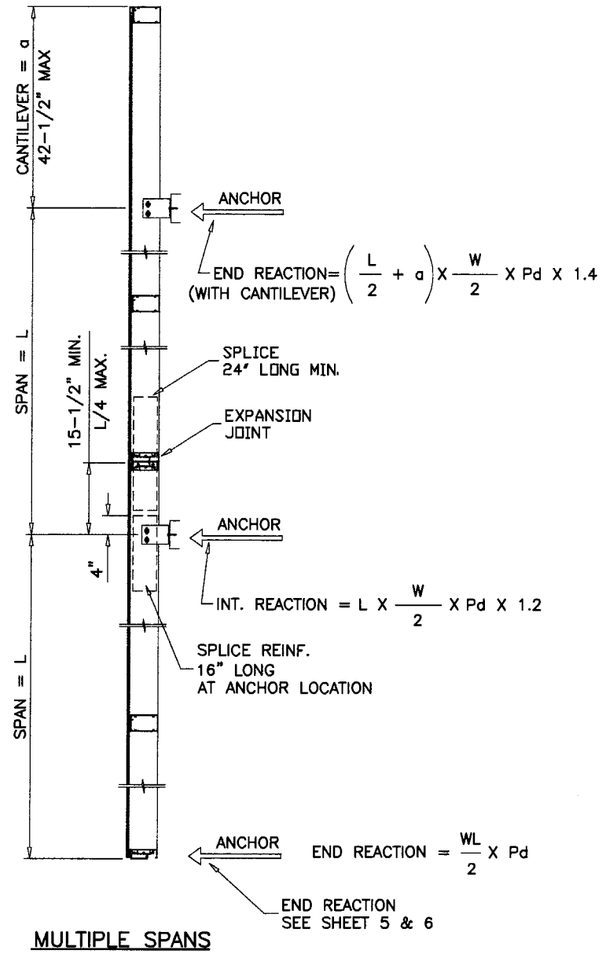

MULTIPLE SPANS

MULTIPLE SPANS WITH OR WITHOUT CANTILEVER
USE TABLE ON THIS SHEET.

W = W1 + W2
SEE SHEET 2

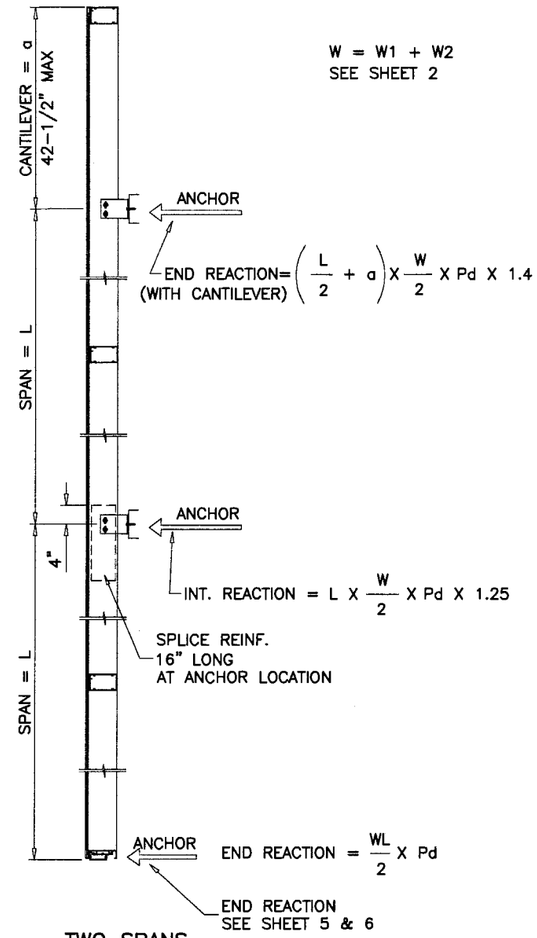

TWO SPANS

TWO SPANS WITH CANTILEVER
AND WITHOUT SPLICE/EXPANSION JOINT
USE TABLE ON THIS SHEET.

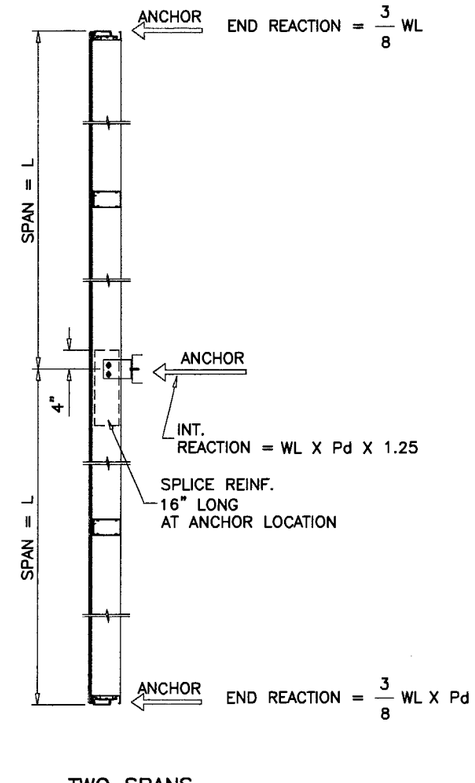

TWO SPANS

TWO SPANS WITHOUT CANTILEVER
AND WITHOUT SPLICE/EXPANSION JOINT
USE TABLE ON THIS SHEET.

UNEQUAL SPANS TO BE CHECKED ON JOB TO JOB BASIS

END REACTIONS MAY CHANGE WITH LOCATION OF
EXPANSION JOINT AND LENGTH OF CANTILEVER
WORST CONDITION SHOWN.

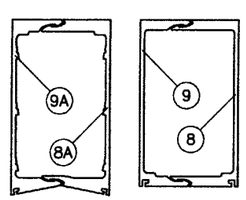

UNREINFORCED

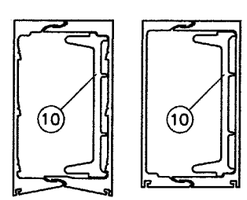

ALUM REINF.
L = MULL LENGTH − 4"

Approved as complying with the
Florida Buiding Code
Date MARCH 02, 2006
NOA# 05-0301.03
Miami Dade Product Control
Division
By Shaq I. Chand

NOTE:
TWO SPANS CONTINUOUS MULLION WITHOUT
OVERHANG CAN BE INSTALLED.
FOR EACH SPAN USE TABLE ON THIS SHEET.

Engr: DR. HUMAYOUN FAROOQ
STRUCTURES
FLA. PE # 16557
C.A.N. 3538

FEB 09 2006

AL-FAROOQ CORPORATION
ENGINEERS, PLANNERS & PRODUCT DESIGN
1235 SW 87 AVE
MIAMI, FLORIDA 33174
TEL. (305) 264-8100 FAX. (305) 262-6978
STORE\W04-78CTC

PRO-TECH 7SG ALUM CURTAIN WALL SYSTEM (L.M.I.)

CRAWFORD TRACEY CORPORATION
3301 SW 13TH DRIVE
DEERFIELD BEACH, FL. 33442-8101
TEL. (954) 698-6888 FAX. (954) 698-6889

revisions:

no	date	by	description
A	09.16.05		REV. PER BCCO COMMENTS
B	02.08.06		REV. PER BCCO COMMENTS

date: 05-25-04
scale: 3/8"=1'-0"
dr. by: HAMID
chk. by:

drawing no.
W04-78

GLASS LOAD CAPACITY – PSF
BASED ON
ASTM E1300–98 (60 SEC. WIND)

NOMINAL DIMS.		GLASS TYPE 'A'	GLASS TYPE 'B'
D.L.O. WIDTH	D.L.O. HEIGHT	EXT. (+) INT. (–)	EXT. (+) INT. (–)
42"	54"	120.0	100.0
45"		120.0	100.0
48"		120.0	100.0
51"		120.0	100.0
54"		120.0	100.0
57"		120.0	100.0
60"		120.0	100.0
63"		120.0	100.0
66"		120.0	100.0
69"		120.0	100.0
72"		120.0	100.0
75"		120.0	100.0
78"		118.0	100.0
42"	60"	120.0	100.0
45"		120.0	100.0
48"		120.0	100.0
51"		120.0	100.0
54"		120.0	100.0
57"		120.0	100.0
60"		120.0	100.0
63"		120.0	100.0
66"		120.0	100.0
69"		119.1	100.0
72"		114.6	100.0
75"		110.4	100.0
78"		106.3	100.0
42"	66"	120.0	100.0
45"		120.0	100.0
48"		120.0	100.0
51"		120.0	100.0
54"		120.0	100.0
57"		120.0	100.0
60"		120.0	100.0
63"		117.6	100.0
66"		111.6	100.0
69"		107.7	100.0
72"		103.9	100.0
75"		100.3	100.0
78"		96.9	96.9
42"	72"	120.0	100.0
45"		120.0	100.0
48"		120.0	100.0
51"		120.0	100.0
54"		120.0	100.0
57"		120.0	100.0
60"		114.6	100.0
63"		109.0	100.0
66"		103.9	100.0
69"		99.1	99.1
72"		94.5	94.5
75"		91.6	91.6
78"		88.8	88.8

GLASS LOAD CAPACITY – PSF
BASED ON
ASTM E1300–98 (60 SEC. WIND)

NOMINAL DIMS.		GLASS TYPE 'A'	GLASS TYPE 'B'
D.L.O. WIDTH	D.L.O. HEIGHT	EXT. (+) INT. (–)	EXT. (+) INT. (–)
42"	78"	120.0	100.0
45"		120.0	100.0
48"		120.0	100.0
51"		120.0	100.0
54"		118.0	100.0
57"		111.9	100.0
60"		106.3	100.0
63"		101.4	100.0
66"		96.9	96.9
69"		92.7	92.7
72"		88.8	88.8
75"		85.0	85.0
78"		81.4	81.4
42"	84"	120.0	100.0
45"		120.0	100.0
48"		120.0	100.0
51"		116.7	100.0
54"		109.8	100.0
57"		103.9	100.0
60"		98.8	98.8
63"		94.5	94.5
66"		90.6	90.6
69"		86.8	86.8
72"		83.4	83.4
75"		80.1	80.1
78"		77.1	77.1
42"	90"	120.0	100.0
45"		120.0	100.0
48"		117.7	100.0
51"		109.2	100.0
54"		102.4	100.0
57"		96.9	96.9
60"		92.1	92.1
63"		88.2	88.2
66"		84.6	84.6
69"		81.4	81.4
72"		78.4	78.4
42"	96"	120.0	100.0
45"		120.0	100.0
48"		111.0	100.0
51"		102.6	100.0
54"		95.8	95.8
57"		90.4	90.4
60"		86.1	86.1
63"		82.3	82.3
66"		79.0	79.0
42"	102"	120.0	100.0
45"		116.4	100.0
48"		105.4	100.0
51"		96.9	96.9
54"		90.3	90.3
57"		84.9	84.9
60"		80.7	80.7
63"		77.1	77.1

GLASS LOAD CAPACITY – PSF
BASED ON
ASTM E1300–98 (60 SEC. WIND)

NOMINAL DIMS.		GLASS TYPE 'A'	GLASS TYPE 'B'
D.L.O. WIDTH	D.L.O. HEIGHT	EXT. (+) INT. (–)	EXT. (+) INT. (–)
42"	108"	120.0	100.0
45"		111.7	100.0
48"		100.6	100.0
51"		92.1	92.1
54"		85.3	85.3
57"		80.1	80.1
60"		75.7	75.7
42"	114"	120.0	100.0
45"		107.8	100.0
48"		96.6	96.6
51"		87.9	87.9
54"		81.1	81.1
57"		75.7	75.7
42"	120"	119.5	100.0
45"		104.7	100.0
48"		93.3	93.3
51"		84.4	84.4
54"		77.5	77.5
42"	126"	117.0	100.0
45"		102.1	100.0
48"		90.4	90.4
51"		81.4	81.4
42"	132"	114.9	100.0
45"		99.9	99.9
48"		88.2	88.2
42"	138"	112.9	100.0
45"		98.1	98.1
42"	144'	111.1	100.0
45"		96.6	96.6
42"	150"	109.5	100.0
56–1/2"	116–1/2"	75.0	75.0

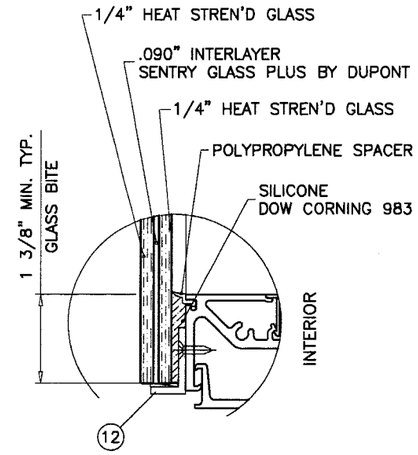

GLASS TYPE 'A'

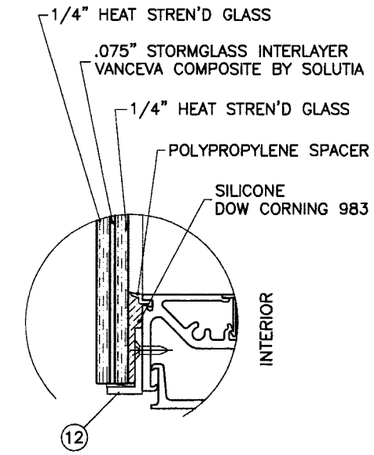

GLASS TYPE 'B'

NOTE:
OPTION OF .019" CERAMIC FRIT ON ROOM SIDE SURFACE OF INNER PANE GLASS.
MAX. GLASS AREA LIMITED TO 22.2 SQ. FT. WITH ASPECT RATIO EQUAL OR LESS THAN 5.

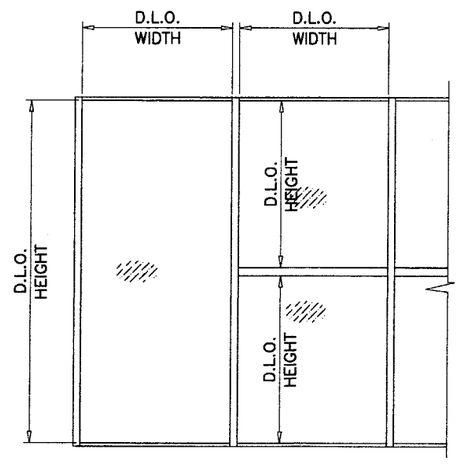

Approved as complying with the Florida Buiding Code
Date MARCH 02, 2006
NOA# 05-0301.03
Miami Dade Product Control Division
By Shaq I. Lhanda

Engr: DR. HUMAYOUN FAROOQ
STRUCTURES
FLA. PE # 16557
C.A.N. 3538

FEB 09 2006

AL-FAROOQ CORPORATION
ENGINEERS, PLANNERS & PRODUCT DESIGN
1235 SW 87 AVE
MIAMI, FLORIDA 33174
TEL. (305) 264-8100 FAX. (305) 262-6978
STORE\W04-78CTC

PRO-TECH 7SG ALUM CURTAIN WALL SYSTEM (L.M.I.)

CRAWFORD TRACEY CORPORATION
3301 SW 13TH DRIVE
DEERFIELD BEACH, FL. 33442-8101
TEL. (954) 698-6888 FAX. (954) 698-6889

revisions:

no	date	by	description
A	09.16.05		REV. PER BCCO COMMENTS
B	02.08.06		REV. PER BCCO COMMENTS

date: 05-25-04
scale: 3/8" = 1"
dr. by: HAMID
chk. by:

drawing no.
W04-78

sheet 4 of 13

GLASS LOAD CAPACITY – PSF BASED ON ASTM E1300–02 (3 SEC. GUSTS)			
NOMINAL DIMS.		GLASS TYPE 'A'	GLASS TYPE 'B'
D.L.O. WIDTH	D.L.O. HEIGHT	EXT. (+) INT. (–)	EXT. (+) INT. (–)
42"	54"	120.0	100.0
45"		120.0	100.0
48"		120.0	100.0
51"		120.0	100.0
54"		120.0	100.0
57"		120.0	100.0
60"		120.0	100.0
63"		120.0	100.0
66"		120.0	100.0
69"		120.0	100.0
72"		120.0	100.0
75"		120.0	100.0
78"		120.0	100.0
42"	60"	120.0	100.0
45"		120.0	100.0
48"		120.0	100.0
51"		120.0	100.0
54"		120.0	100.0
57"		120.0	100.0
60"		120.0	100.0
63"		120.0	100.0
66"		120.0	100.0
69"		120.0	100.0
72"		120.0	100.0
75"		120.0	100.0
78"		120.0	100.0
42"	66"	120.0	100.0
45"		120.0	100.0
48"		120.0	100.0
51"		120.0	100.0
54"		120.0	100.0
57"		120.0	100.0
60"		120.0	100.0
63"		120.0	100.0
66"		120.0	100.0
69"		120.0	100.0
72"		120.0	100.0
75"		120.0	100.0
78"		120.0	100.0
42"	72"	120.0	100.0
45"		120.0	100.0
48"		120.0	100.0
51"		120.0	100.0
54"		120.0	100.0
57"		120.0	100.0
60"		120.0	100.0
63"		120.0	100.0
66"		120.0	100.0
69"		120.0	100.0
72"		120.0	100.0
75"		120.0	100.0
78"		120.0	100.0

GLASS LOAD CAPACITY – PSF BASED ON ASTM E1300–02 (3 SEC. GUSTS)			
NOMINAL DIMS.		GLASS TYPE 'A'	GLASS TYPE 'B'
D.L.O. WIDTH	D.L.O. HEIGHT	EXT. (+) INT. (–)	EXT. (+) INT. (–)
42"	78"	120.0	100.0
45"		120.0	100.0
48"		120.0	100.0
51"		120.0	100.0
54"		120.0	100.0
57"		120.0	100.0
60"		120.0	100.0
63"		120.0	100.0
66"		120.0	100.0
69"		120.0	100.0
72"		120.0	100.0
75"		120.0	100.0
78"		120.0	100.0
42"	84"	120.0	100.0
45"		120.0	100.0
48"		120.0	100.0
51"		120.0	100.0
54"		120.0	100.0
57"		120.0	100.0
60"		120.0	100.0
63"		120.0	100.0
66"		120.0	100.0
69"		120.0	100.0
72"		119.8	100.0
75"		116.4	100.0
78"		113.2	100.0
42"	90"	120.0	100.0
45"		120.0	100.0
48"		120.0	100.0
51"		120.0	100.0
54"		120.0	100.0
57"		120.0	100.0
60"		120.0	100.0
63"		120.0	100.0
66"		118.5	100.0
69"		115.1	100.0
72"		111.9	100.0
42"	96"	120.0	100.0
45"		120.0	100.0
48"		120.0	100.0
51"		120.0	100.0
54"		120.0	100.0
57"		120.0	100.0
60"		117.2	100.0
63"		113.5	100.0
66"		110.3	100.0
42"	102"	120.0	100.0
45"		120.0	100.0
48"		120.0	100.0
51"		120.0	100.0
54"		117.7	100.0
57"		113.5	100.0
60"		109.4	100.0
63"		105.9	100.0

GLASS LOAD CAPACITY – PSF BASED ON ASTM E1300–02 (3 SEC. GUSTS)			
NOMINAL DIMS.		GLASS TYPE 'A'	GLASS TYPE 'B'
D.L.O. WIDTH	D.L.O. HEIGHT	EXT. (+) INT. (–)	EXT. (+) INT. (–)
42"	108"	120.0	100.0
45"		120.0	100.0
48"		120.0	100.0
51"		116.9	100.0
54"		111.3	100.0
57"		106.4	100.0
60"		102.5	100.0
42"	114"	120.0	100.0
45"		120.0	100.0
48"		118.4	100.0
51"		111.8	100.0
54"		105.5	100.0
57"		100.3	100.0
42"	120"	120.0	100.0
45"		120.0	100.0
48"		114.3	100.0
51"		106.6	100.0
54"		100.3	100.0
42"	126"	120.0	100.0
45"		118.7	100.0
48"		109.9	100.0
51"		102.4	100.0
42"	132"	120.0	100.0
45"		115.2	100.0
48"		106.3	100.0
42"	138"	120.0	100.0
45"		112.9	100.0
42"	144'	120.0	100.0
45"		111.6	100.0
42"	150"	120.0	100.0
56–1/2"	116–1/2"	100.0	100.0

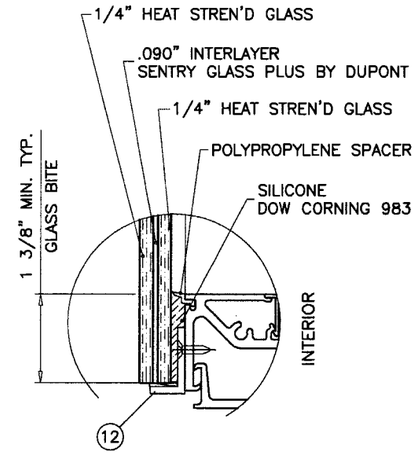

GLASS TYPE 'A'

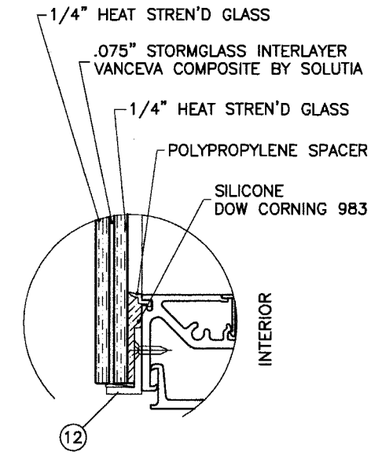

GLASS TYPE 'B'

NOTE:
OPTION OF .019" CERAMIC FRIT ON ROOM SIDE SURFACE OF INNER PANE GLASS.
MAX. GLASS AREA LIMITED TO 22.2 SQ. FT. WITH ASPECT RATIO EQUAL OR LESS THAN 5.

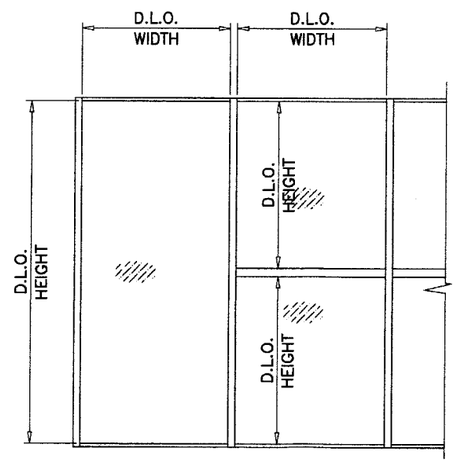

Approved as complying with the Florida Building Code
Date MARCH 02, 2006
NOA# 05-0301.03
Miami Dade Product Control Division
By Ishaq I. Chanda

Engr: DR. HUMAYOUN FAROOQ
STRUCTURES
FLA. PE # 16557
C.A.N. 3538
FEB 09 2006

AL-FAROOQ CORPORATION
ENGINEERS, PLANNERS & PRODUCT DESIGN
1235 SW 87 AVE
MIAMI, FLORIDA 33174
TEL. (305) 264-8100 FAX. (305) 262-6978
STORE\W04-78CTC

PRO-TECH 7SG ALUM CURTAIN WALL SYSTEM (L.M.I.)

CRAWFORD TRACEY CORPORATION
3301 SW 13TH DRIVE
DEERFIELD BEACH, FL. 33442-8101
TEL. (954) 698-6888 FAX. (954) 698-6889

revisions:

no	date	by	description
A	09.16.05		REV. PER BCCO COMMENTS
B	02.08.06		REV. PER BCCO COMMENTS

date: 05-25-04
scale: 3/8" = 1"
dr. by: HAMID
chk. by:

drawing no.
W04-78

sheet 4A of 13

ANCHOR LOAD CAPACITY – PSF
EXT.(+) & INT.(–)

NOMINAL DIMS.		ANCHORS TYPE 'A'			ANCHORS TYPE 'B'		ANCHORS TYPE 'C'	
WIDTH (W)	FRAME HEIGHT	A3	A4	A5	B2	B3	C2	C3
36"	120"	120.0	120.0	120.0	120.0	120.0	120.0	120.0
39"		120.0	120.0	120.0	120.0	120.0	120.0	120.0
42"		120.0	120.0	120.0	120.0	120.0	112.9	120.0
45"		116.5	120.0	120.0	120.0	120.0	105.3	120.0
48"		109.2	120.0	120.0	120.0	120.0	105.3	120.0
51"		102.8	120.0	120.0	120.0	120.0	102.2	120.0
54"		102.8	120.0	120.0	113.7	120.0	96.6	120.0
57"		98.5	118.2	120.0	107.7	120.0	91.5	120.0
60"		93.6	118.2	120.0	107.7	120.0	91.5	118.5
63"		89.1	112.9	120.0	106.3	120.0	90.3	112.9
66"		89.1	107.8	120.0	101.5	120.0	86.2	112.9
69"		86.8	103.1	120.0	101.5	120.0	86.2	109.9
72"		83.2	103.1	119.6	100.8	120.0	85.6	105.3
36"	126"	120.0	120.0	120.0	120.0	120.0	120.0	120.0
39"		118.9	120.0	120.0	120.0	120.0	115.8	120.0
42"		118.9	120.0	120.0	120.0	120.0	107.5	120.0
45"		110.9	120.0	120.0	118.1	120.0	100.3	120.0
48"		104.0	120.0	120.0	118.1	120.0	100.3	120.0
51"		97.9	120.0	120.0	114.6	120.0	97.4	120.0
54"		97.9	118.9	120.0	108.3	120.0	92.0	120.0
57"		93.8	112.6	120.0	102.6	120.0	87.1	118.8
60"		89.1	112.6	120.0	102.6	120.0	87.1	112.9
63"		84.9	107.5	120.0	101.2	120.0	86.0	107.5
66"		84.9	102.6	120.0	96.6	120.0	82.1	107.5
69"		82.7	98.2	118.9	96.6	120.0	82.1	104.7
72"		79.2	98.2	113.9	96.0	118.1	81.5	100.3
36"	132"	120.0	120.0	120.0	120.0	120.0	119.7	120.0
39"		113.5	120.0	120.0	120.0	120.0	110.5	120.0
42"		113.5	120.0	120.0	120.0	120.0	102.6	120.0
45"		105.9	120.0	120.0	112.7	120.0	95.8	120.0
48"		99.3	120.0	120.0	112.7	120.0	95.8	120.0
51"		93.4	120.0	120.0	109.4	120.0	92.9	118.3
54"		93.4	113.5	120.0	103.3	120.0	87.8	118.3
57"		89.6	107.5	120.0	97.9	120.0	83.2	113.4
60"		85.1	107.5	120.0	97.9	120.0	83.2	107.7
63"		81.0	102.6	118.9	96.6	120.0	82.1	102.6
66"		81.0	98.0	118.6	92.2	120.0	78.3	102.6
69"		78.9	93.7	113.5	92.2	117.6	78.3	99.9
72"		75.6	93.7	108.7	91.6	112.7	77.8	95.8
36"	138"	117.6	120.0	120.0	120.0	120.0	114.5	120.0
39"		108.5	120.0	120.0	120.0	120.0	105.7	120.0
42"		108.5	120.0	120.0	115.5	120.0	98.1	120.0
45"		101.3	120.0	120.0	107.8	120.0	91.6	120.0
48"		95.0	120.0	120.0	107.8	120.0	91.6	120.0
51"		89.4	114.9	120.0	104.7	120.0	88.9	113.1
54"		89.4	108.5	120.0	98.8	120.0	84.0	113.1
57"		85.7	102.8	120.0	93.6	120.0	79.5	108.5
60"		81.4	102.8	119.4	93.6	120.0	79.5	103.0
63"		77.5	98.2	113.7	92.4	115.5	78.5	98.1
66"		77.5	93.7	113.5	88.2	115.5	74.9	98.1
69"		75.5	89.6	108.5	88.2	112.5	74.9	95.6
72"		72.3	89.6	104.0	87.6	107.8	74.4	91.6

ANCHOR LOAD CAPACITY – PSF
EXT.(+) & INT.(–)

NOMINAL DIMS.		ANCHORS TYPE 'A'			ANCHORS TYPE 'B'		ANCHORS TYPE 'C'	
WIDTH (W)	FRAME HEIGHT	A3	A4	A5	B2	B3	C2	C3
36"	144"	112.7	120.0	120.0	120.0	120.0	109.7	120.0
39"		104.0	120.0	120.0	119.2	120.0	101.3	120.0
42"		104.0	120.0	120.0	110.7	120.0	94.0	120.0
45"		97.1	117.9	120.0	103.3	120.0	87.8	120.0
48"		91.0	117.0	120.0	103.3	120.0	87.8	115.2
51"		85.6	110.1	120.0	100.3	120.0	85.2	108.4
54"		85.6	104.0	120.0	94.7	120.0	80.5	108.4
57"		82.1	98.5	120.0	89.7	120.0	76.2	103.9
60"		78.0	98.5	114.4	89.7	116.3	76.2	98.8
63"		74.3	94.1	109.0	88.6	110.7	75.2	94.0
66"		74.3	89.8	108.7	84.5	110.7	71.8	94.0
69"		72.3	85.9	104.0	84.5	107.8	71.8	91.6
36"	150"	108.2	120.0	120.0	120.0	120.0	105.3	120.0
39"		99.8	120.0	120.0	114.5	120.0	97.2	120.0
42"		99.8	120.0	120.0	106.3	120.0	90.3	120.0
45"		93.2	113.2	120.0	99.2	120.0	84.3	118.0
48"		87.4	112.3	120.0	99.2	120.0	84.3	110.6
51"		82.2	105.7	120.0	96.3	120.0	81.8	104.1
54"		82.2	99.8	120.0	90.9	120.0	77.2	104.1
57"		78.8	94.6	115.6	86.1	117.5	73.2	99.8
60"		74.9	94.6	109.8	86.1	111.6	73.2	94.8
63"		71.3	90.3	104.6	85.0	106.3	72.2	90.3
66"		71.3	86.2	104.4	81.2	106.3	68.9	90.3
36"	156"	104.0	120.0	120.0	119.2	120.0	101.3	120.0
39"		96.0	120.0	120.0	110.1	120.0	93.5	120.0
42"		96.0	116.6	120.0	102.2	120.0	86.8	120.0
45"		89.6	108.8	120.0	95.4	120.0	81.0	113.4
48"		84.0	108.0	120.0	95.4	120.0	81.0	106.3
51"		79.1	101.6	118.6	92.6	117.8	78.6	100.1
54"		79.1	96.0	117.3	87.4	117.8	74.3	100.1
57"		75.8	90.9	111.2	82.8	113.0	70.4	96.0
60"		72.0	90.9	105.6	82.8	107.3	70.4	91.2
63"		68.6	86.9	100.6	81.8	102.2	69.5	86.8
36"	162"	100.1	120.0	120.0	114.8	120.0	97.5	120.0
39"		92.4	120.0	120.0	106.0	120.0	90.0	117.0
42"		92.4	112.3	120.0	98.4	120.0	83.6	117.0
45"		86.3	104.8	120.0	91.9	120.0	78.0	109.2
48"		80.9	104.0	120.0	91.9	120.0	78.0	102.4
51"		76.1	97.9	114.2	89.2	113.5	75.7	96.4
54"		76.1	92.4	113.0	84.2	113.5	71.5	96.4
57"		73.0	87.6	107.0	79.8	108.8	67.8	92.4
60"		69.3	87.6	101.7	79.8	103.3	70.2	87.8
36"	168"	96.6	120.0	120.0	110.7	120.0	94.0	120.0
39"		89.1	116.6	120.0	102.2	120.0	86.8	112.9
42"		89.1	108.2	120.0	94.9	120.0	80.6	112.9
45"		83.2	101.0	120.0	88.6	120.0	75.2	105.3
48"		78.0	100.3	117.0	88.6	116.3	75.2	98.8
51"		73.4	94.4	110.1	86.0	109.4	73.0	92.9
54"		73.4	89.1	109.0	81.2	109.4	69.0	92.9
57"		70.4	84.5	103.2	76.9	104.9	65.3	89.1
60"		66.9	84.5	98.1	76.9	99.6	65.3	84.6

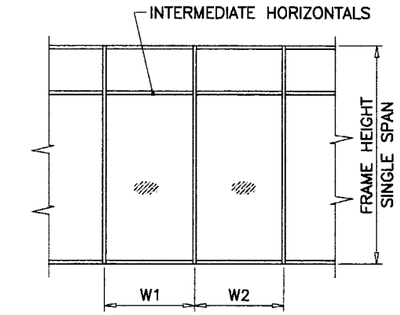

$$\text{WIDTH (W)} = \frac{W1 + W2}{2}$$

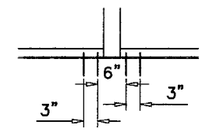

B2, C2

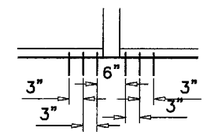

A3, B3, C3

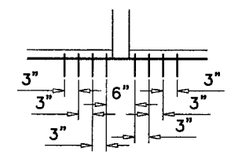

A4

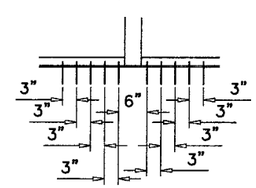

A5

ANCHORS TYPES: SEE SHEET 7 FOR DESCRIPTION

A3 = (3) ANCHORS TYPE 'A' AT EACH SIDE OF MULLION
A4 = (4) ANCHORS TYPE 'A' AT EACH SIDE OF MULLION
A5 = (5) ANCHORS TYPE 'A' AT EACH SIDE OF MULLION

B2 = (2) ANCHORS TYPE 'B' AT EACH SIDE OF MULLION
B3 = (3) ANCHORS TYPE 'B' AT EACH SIDE OF MULLION

C2 = (2) ANCHORS TYPE 'C' AT EACH SIDE OF MULLION
C3 = (3) ANCHORS TYPE 'C' AT EACH SIDE OF MULLION

ALL OTHER ANCHORS TO BE SPACED AS PER ELEVATION.

Approved as complying with the Florida Building Code
Date MARCH 02, 2006
NOA# 05-0301.03
Miami Dade Product Control Division
By Chaya I. Chanda

Engr: DR. HUMAYOUN FAROOQ
STRUCTURES
FLA. PE # 18557
C.A.N. 3538

FEB 09 2006

AL-FAROOQ CORPORATION
ENGINEERS, PLANNERS & PRODUCT DESIGN
1235 SW 87 AVE
MIAMI, FLORIDA 33174
TEL. (305) 264-8100 FAX. (305) 262-6978
STORE\W04-78CTC

PRO-TECH 7SG ALUM CURTAIN WALL SYSTEM (L.M.I.)

CRAWFORD TRACEY CORPORATION
3301 SW 13TH DRIVE
DEERFIELD BEACH, FL. 33442-8101
TEL. (954) 698-6888 FAX. (954) 698-6889

revisions:

no	date	by	description
A	09.16.05		REV. PER BCCO COMMENTS
B	02.08.06		REV. PER BCCO COMMENTS

date: 05-25-04
scale: 3/8"=1'-0"
dr. by: HAMID
chk. by:

drawing no.
W04-78

ANCHOR LOAD CAPACITY – PSF EXT.(+) & INT.(–)					
NOMINAL DIMS.		4 ANCHORS PER PLATE TYPE 'D'		6 ANCHORS PER PLATE TYPE 'D'	
WIDTH (W)	FRAME HEIGHT	2–1/4" EDGE DIST.	3–1/4" EDGE DIST.	2–1/4" EDGE DIST.	3–1/4" EDGE DIST.
36"	120"	120.0	120.0	120.0	120.0
39"		120.0	120.0	120.0	120.0
42"		120.0	120.0	120.0	120.0
45"		120.0	120.0	120.0	120.0
48"		120.0	120.0	120.0	120.0
51"		113.6	120.0	120.0	120.0
54"		107.3	120.0	120.0	120.0
57"		101.7	120.0	120.0	120.0
60"		96.6	120.0	120.0	120.0
63"		92.0	120.0	120.0	120.0
66"		87.8	117.1	120.0	120.0
69"		84.0	112.0	120.0	120.0
72"		80.5	107.3	120.0	120.0
36"	126"	120.0	120.0	120.0	120.0
39"		120.0	120.0	120.0	120.0
42"		120.0	120.0	120.0	120.0
45"		120.0	120.0	120.0	120.0
48"		115.0	120.0	120.0	120.0
51"		108.2	120.0	120.0	120.0
54"		102.2	120.0	120.0	120.0
57"		96.8	120.0	120.0	120.0
60"		92.0	120.0	120.0	120.0
63"		87.6	116.8	120.0	120.0
66"		83.6	111.5	120.0	120.0
69"		80.0	106.6	120.0	120.0
72"		76.7	102.2	115.0	120.0
36"	132"	120.0	120.0	120.0	120.0
39"		120.0	120.0	120.0	120.0
42"		120.0	120.0	120.0	120.0
45"		117.1	120.0	120.0	120.0
48"		109.8	120.0	120.0	120.0
51"		103.3	120.0	120.0	120.0
54"		97.6	120.0	120.0	120.0
57"		92.4	120.0	120.0	120.0
60"		87.8	117.1	120.0	120.0
63"		83.6	111.5	120.0	120.0
66"		79.8	106.4	119.7	120.0
69"		76.4	101.8	114.5	120.0
72"		73.2	97.5	109.8	120.0
36"	138"	120.0	120.0	120.0	120.0
39"		120.0	120.0	120.0	120.0
42"		120.0	120.0	120.0	120.0
45"		112.0	120.0	120.0	120.0
48"		105.0	120.0	120.0	120.0
51"		98.8	120.0	120.0	120.0
54"		93.3	120.0	120.0	120.0
57"		88.4	117.9	120.0	120.0
60"		84.0	112.0	120.0	120.0
63"		80.0	106.6	120.0	120.0
66"		76.4	101.8	114.5	120.0
69"		73.0	97.4	109.6	120.0
72"		70.0	93.3	105.0	120.0

ANCHOR LOAD CAPACITY – PSF EXT.(+) & INT.(–)					
NOMINAL DIMS.		4 ANCHORS PER PLATE TYPE 'D'		6 ANCHORS PER PLATE TYPE 'D'	
WIDTH (W)	FRAME HEIGHT	2–1/4" EDGE DIST.	3–1/4" EDGE DIST.	2–1/4" EDGE DIST.	3–1/4" EDGE DIST.
36"	144"	120.0	120.0	120.0	120.0
39"		120.0	120.0	120.0	120.0
42"		115.0	120.0	120.0	120.0
45"		107.3	120.0	120.0	120.0
48"		100.6	120.0	120.0	120.0
51"		94.7	120.0	120.0	120.0
54"		89.4	119.2	120.0	120.0
57"		84.7	112.9	120.0	120.0
60"		80.5	107.3	120.0	120.0
63"		76.7	102.2	115.0	120.0
66"		73.2	97.5	109.8	120.0
69"		70.0	93.3	105.0	120.0
36"	150"	120.0	120.0	120.0	120.0
39"		118.9	120.0	120.0	120.0
42"		110.4	120.0	120.0	120.0
45"		103.0	120.0	120.0	120.0
48"		96.6	120.0	120.0	120.0
51"		90.9	120.0	120.0	120.0
54"		85.9	114.5	120.0	120.0
57"		81.3	108.4	120.0	120.0
60"		77.3	103.0	115.9	120.0
63"		73.6	98.1	110.4	120.0
66"		70.3	93.6	105.4	120.0
36"	156"	120.0	120.0	120.0	120.0
39"		114.3	120.0	120.0	120.0
42"		106.2	120.0	120.0	120.0
45"		99.1	120.0	120.0	120.0
48"		92.9	120.0	120.0	120.0
51"		87.4	116.5	120.0	120.0
54"		82.6	110.1	120.0	120.0
57"		78.2	104.3	117.3	120.0
60"		74.3	99.0	111.1	120.0
63"		70.8	94.3	106.1	120.0
36"	162"	119.3	120.0	120.0	120.0
39"		110.1	120.0	120.0	120.0
42"		102.2	120.0	120.0	120.0
45"		95.4	120.0	120.0	120.0
48"		89.4	119.2	120.0	120.0
51"		84.2	112.2	120.0	120.0
54"		79.5	106.0	119.2	120.0
57"		75.3	100.4	113.0	120.0
60"		71.6	95.4	107.3	120.0
36"	168"	115.0	120.0	120.0	120.0
39"		106.2	120.0	120.0	120.0
42"		98.6	120.0	120.0	120.0
45"		92.0	120.0	120.0	120.0
48"		86.3	115.0	120.0	120.0
51"		81.2	108.2	120.0	120.0
54"		76.7	102.2	115.0	120.0
57"		72.6	96.8	108.9	120.0
60"		69.0	92.0	103.5	120.0

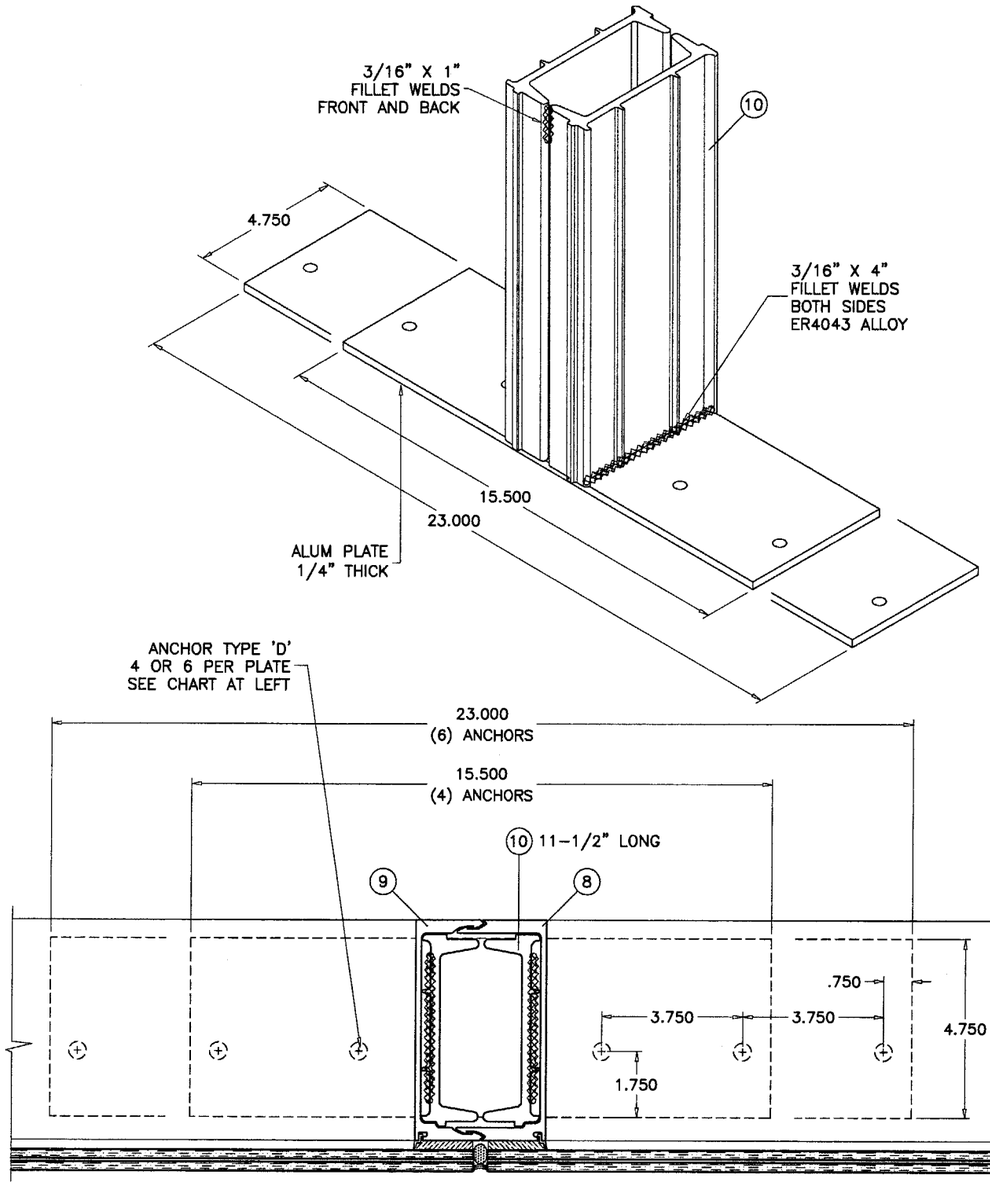

TYPICAL ANCHORS:

TYPE 'D'– 3/8" DIA. POWERS WEDGE–BOLT ANCHOR
DIRECTLY INTO CONCRETE
1–1/2" MIN. EMBED INTO CONC. (3000 PSI MIN.)
EDGE DIST. (SEE CHARTS)

Approved as complying with the Florida Building Code
Date MARCH 02, 2006
NOA# 05-0301.03
Miami Dade Product Control Division
By Shaq I. Chanda

Engr: DR. HUMAYOUN FAROOQ
STRUCTURES
FLA. PE # 16557
C.A.N. 3538

FEB 09 2006

AL-FAROOQ CORPORATION
ENGINEERS, PLANNERS & PRODUCT DESIGN
1235 SW 87 AVE
MIAMI, FLORIDA 33174
TEL. (305) 264-8100 FAX. (305) 262-6978
STORE\W04-78CTC

PRO-TECH 7SG ALUM CURTAIN WALL SYSTEM (L.M.I.)

CRAWFORD TRACEY CORPORATION
3301 SW 13TH DRIVE
DEERFIELD BEACH, FL. 33442-8101
TEL. (954) 698-6888 FAX. (954) 698-6889

revisions:

no	date	by	description
A	09.16.05		REV. PER BCCO COMMENTS
B	02.08.06		REV. PER BCCO COMMENTS

date: 05-25-04
scale: 1/4" = 1"
dr. by: HAMID
chk. by:

drawing no.
W04-78

sheet 6 of 13

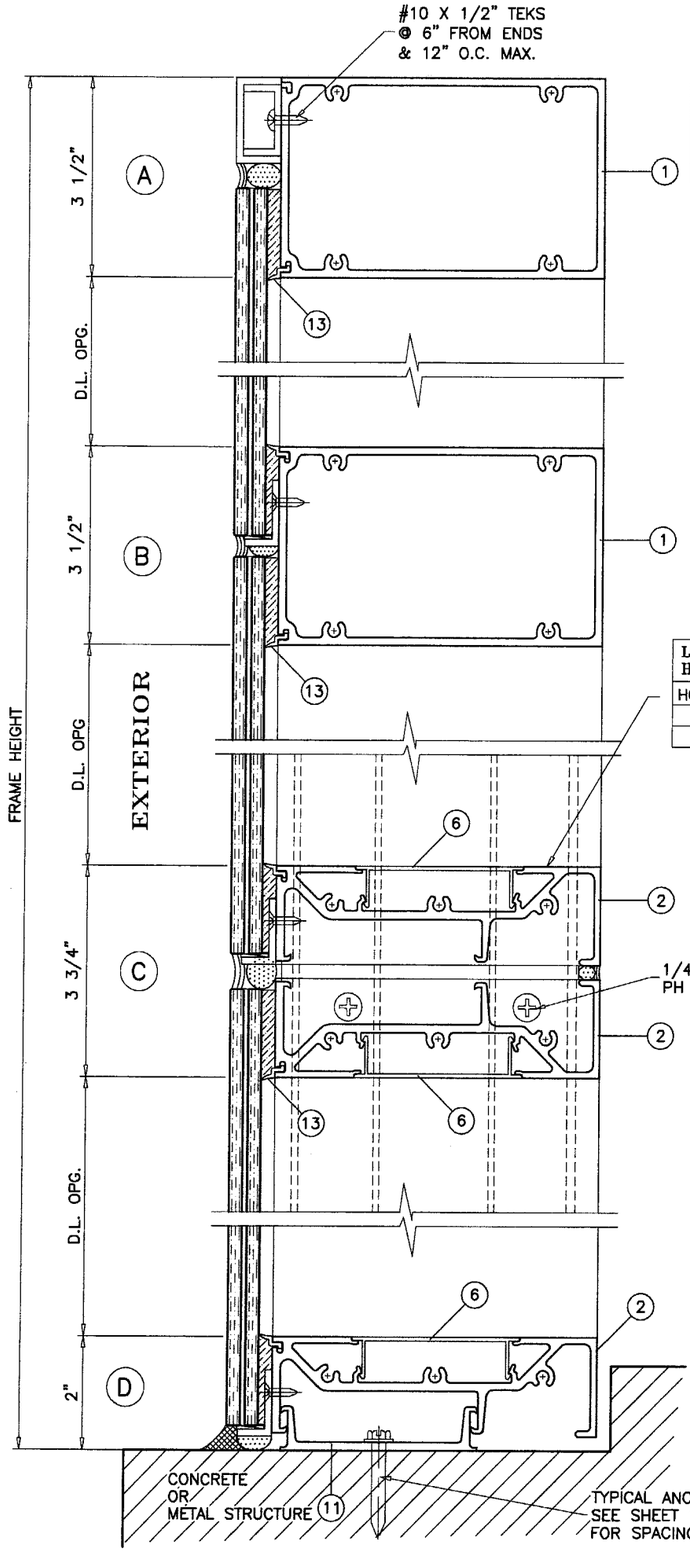

LIMIT MAX. DESIGN LOADS FOR THIS HORIZONTAL AS FOLLOWS	
HORIZ. SPAN MAX.	LAM. GLASS
60"	120 PSF
68"	100 PSF

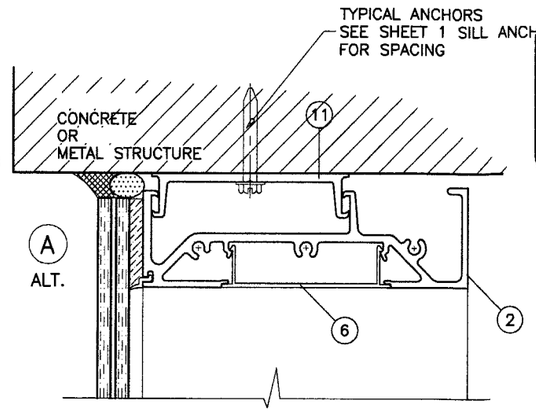

WOOD/METAL STRUCTURES NOT BY CRAWFORD TRACEY, MUST SUPPORT LOADS IMPOSED BY GLAZING SYSTEM AND TRANSFER THEM TO THE BUILDING STRUCTURE.

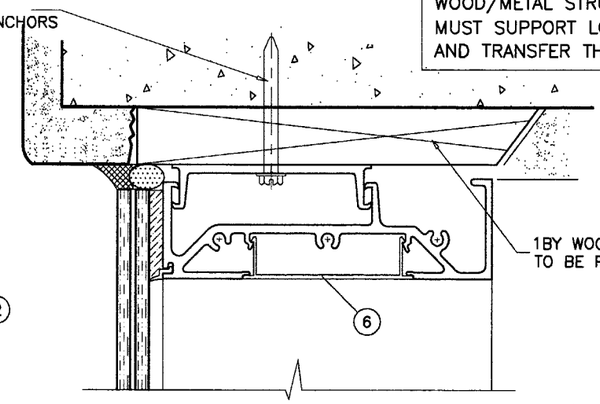

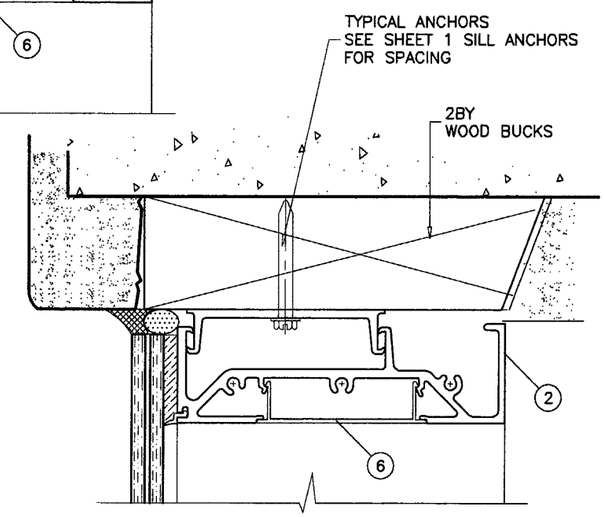

TYPICAL ANCHORS: SEE ELEV. FOR SPACING

TYPE 'A'– 1/4" TAPCONS BY 'ELCO'
INTO WOOD STRUCTURES
2" MIN. PENETRATION INTO WOOD

THRU WOOD BUCKS INTO CONC. OR MASONRY
1–1/4" MIN. EMBED INTO CONC. OR MASONRY BEYOND WOOD

TYPE 'B'– 1/4" TAPCONS BY 'ELCO'
DIRECTLY INTO CONC. OR MASONRY
1–1/4" MIN. EMBED INTO CONC. OR MASONRY

TYPE 'C'– 1/4" TEKS BY ITW OR SELF DRILLING SCREWS (GRADE 5 CRS)
INTO METAL STRUCTURES (STEEL OR ALUMINUM 1/8" MIN. THICK.)
STEEL : Fy = 36 KSI MIN.
ALUMINUM : 6063–T5 MIN.
(STEEL IN CONTACT WITH ALUMINUM TO BE PLATED OR PAINTED)

TYPICAL EDGE DISTANCE
INTO CONCRETE AND MASONRY = 3" MIN.
INTO WOOD STRUCTURE = 1" MIN.

TYPE 'D'– SEE SHEET 6

Approved as complying with the Florida Buiding Code
Date MARCH 02, 2006
NOA# 05-0301.03
Miami Dade Product Control Division
By Ishaq I. Chanda

Engr: DR. HUMAYOUN FAROOQ
STRUCTURES
FLA. PE # 16557
C.A.N. 3538

FEB 09 2006

AL-FAROOQ CORPORATION
ENGINEERS, PLANNERS & PRODUCT DESIGN
1235 SW 87 AVE
MIAMI, FLORIDA 33174
TEL. (305) 264-8100 FAX. (305) 262-6978
STORE\W04-78CTC

PRO-TECH 7SG ALUM CURTAIN WALL SYSTEM (L.M.I.)

CRAWFORD TRACEY CORPORATION
3301 SW 13TH DRIVE
DEERFIELD BEACH, FL. 33442-8101
TEL. (954) 698-6888 FAX. (954) 698-6889

revisions:

no	date	by	description
A	09.16.05		REV. PER BCCO COMMENTS
B	02.08.06		REV. PER BCCO COMMENTS

date: 05-25-04
scale: 3/8" = 1"
dr. by: HAMID
chk. by:

drawing no.
W04-78

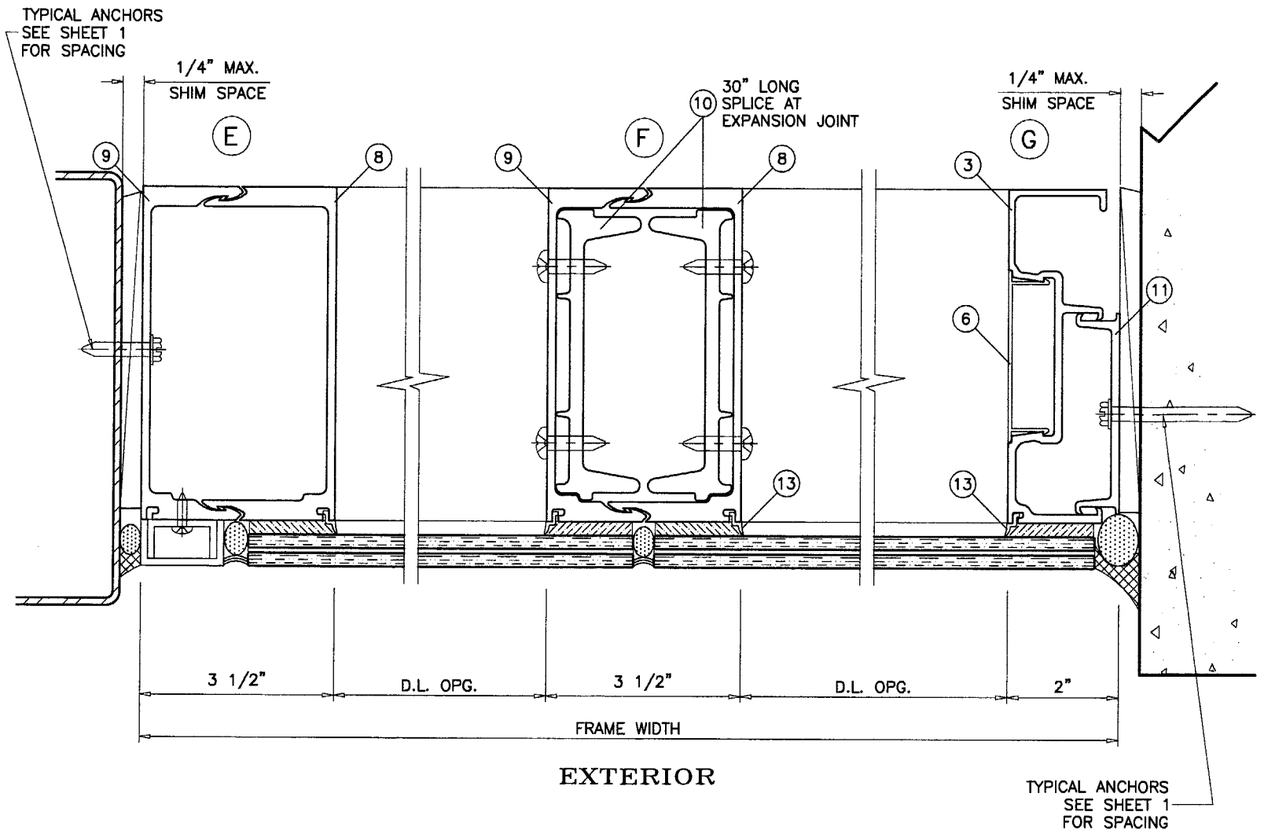

EXTERIOR

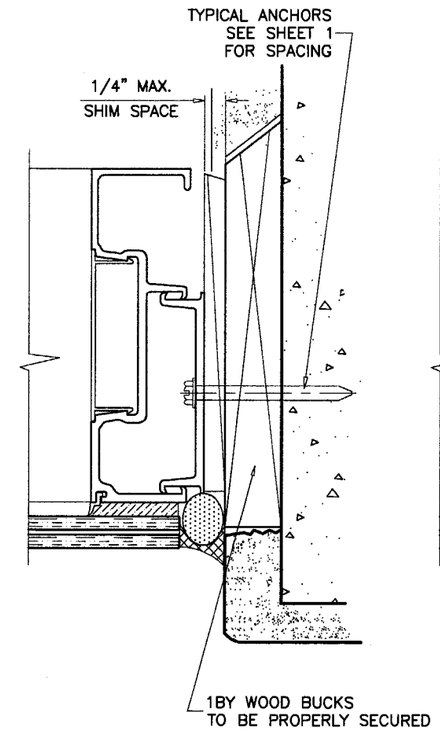

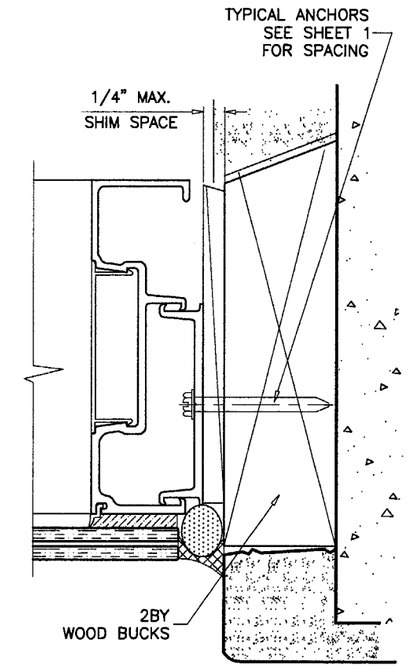

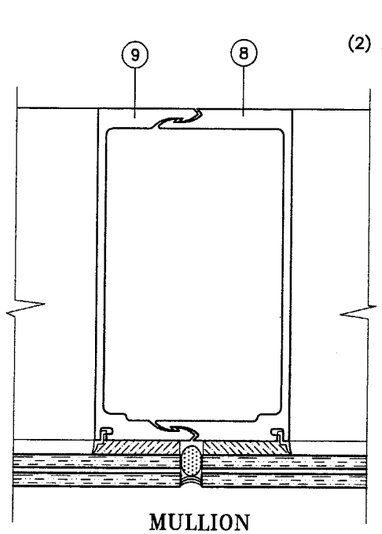

MULLION
UNREINFORCED

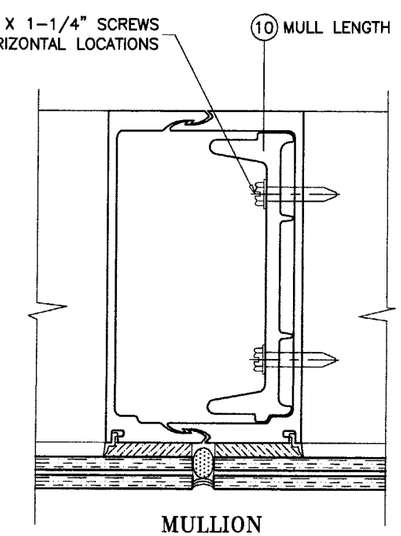

MULLION
ALUM REINFORCING

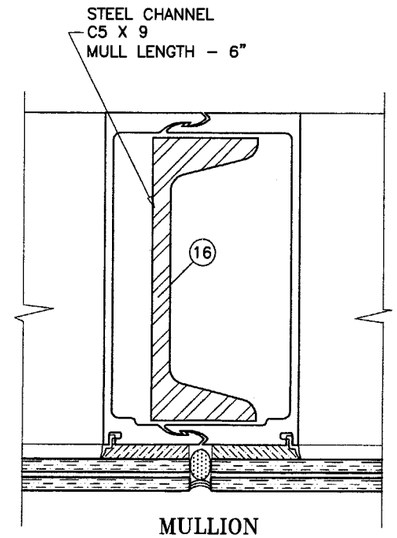

MULLION
STEEL REINFORCING

Approved as complying with the
Florida Building Code
Date MARCH 02, 2006
NOA# 05-0301.03
Miami Dade Product Control
Division
By Shaq I. Chauda

Engr: DR. HUMAYOUN FAROOQ
STRUCTURES
FLA. PE # 16557
C.A.N. 3538

FEB 09 2006

AL-FAROOQ CORPORATION
ENGINEERS, PLANNERS & PRODUCT DESIGN
1235 SW 87 AVE
MIAMI, FLORIDA 33174
TEL. (305) 264-8100 FAX. (305) 262-6978
STORE\W04-78CTC

PRO-TECH 7SG ALUM CURTAIN WALL SYSTEM (L.M.I.)

CRAWFORD TRACEY CORPORATION
3301 SW 13TH DRIVE
DEERFIELD BEACH, FL. 33442-8101
TEL. (954) 698-6888 FAX. (954) 698-6889

revisions:

no	date	by	description
A	09.16.05		REV. PER BCCO COMMENTS
B	02.08.06		REV. PER BCCO COMMENTS

date: 05-25-04
scale: 3/8" = 1"
dr. by: HAMID
chk. by:

drawing no.
W04-78

sheet 8 of 13

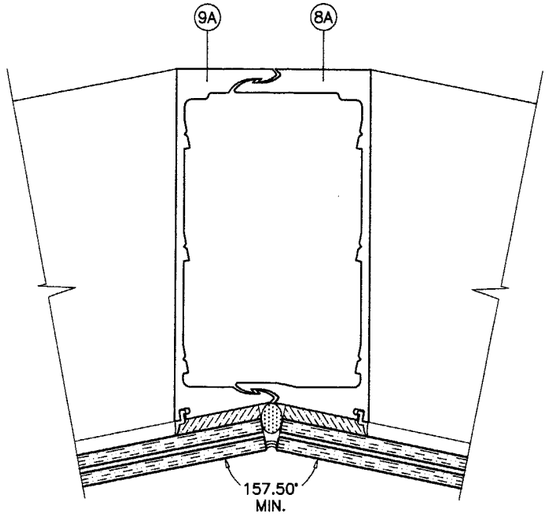

MULLION
UNREINFORCED
MAX. L = 120 IN.

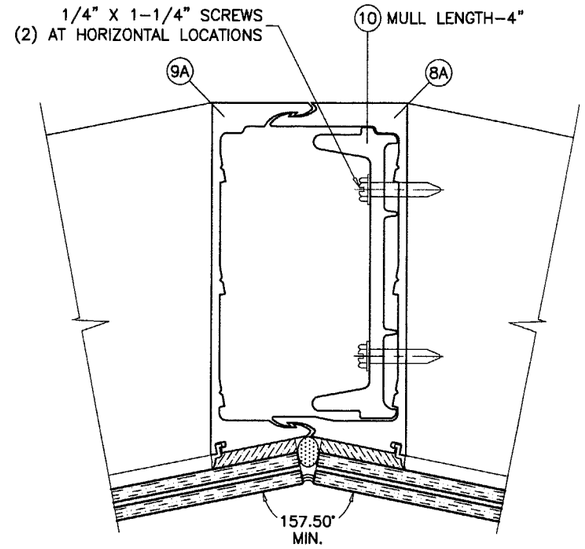

MULLION
ALUM REINFORCING

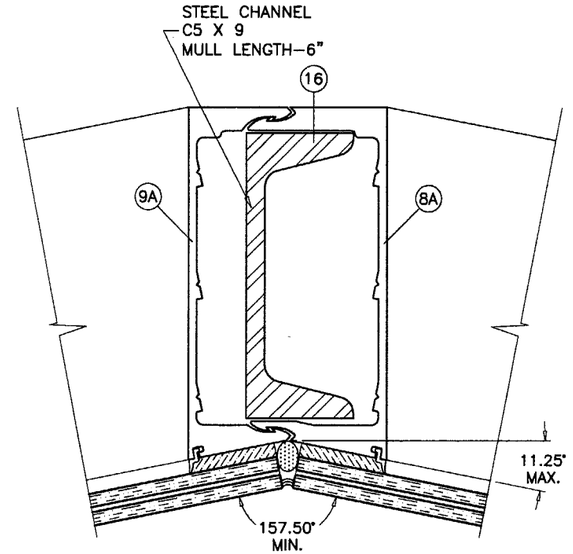

MULLION
STEEL REINFORCING

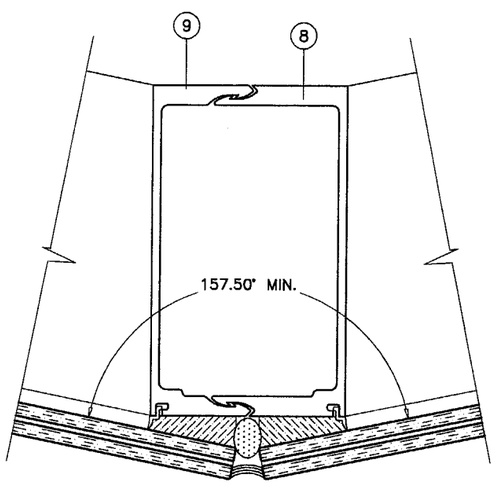

MULLION
UNREINFORCED
MAX. L = 120 IN.

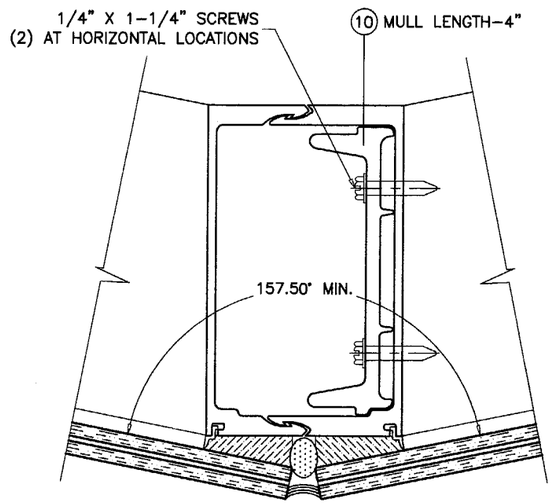

MULLION
ALUM REINFORCING

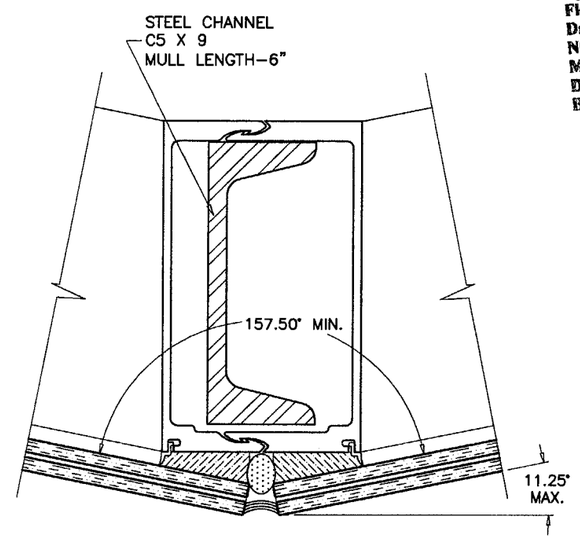

MULLION
STEEL REINFORCING

Approved as complying with the Florida Building Code
Date MARCH 02, 2006
NOA# 05-0301.03
Miami Dade Product Control Division
By Ishay I. Chanda

Engr: DR. HUMAYOUN FAROOQ
STRUCTURES
FLA. PE # 16557
C.A.N. 3538

FEB 09 2006

AL-FAROOQ CORPORATION
ENGINEERS, PLANNERS & PRODUCT DESIGN
1235 SW 87 AVE
MIAMI, FLORIDA 33174
TEL. (305) 264-8100 FAX. (305) 262-6978
STORE\W04-78CTC

PRO-TECH 7SG ALUM CURTAIN WALL SYSTEM (L.M.I.)

CRAWFORD TRACEY CORPORATION
3301 SW 13TH DRIVE
DEERFIELD BEACH, FL. 33442-8101
TEL. (954) 698-6888 FAX. (954) 698-6889

revisions:

no	date	by	description
A	09.16.05		REV. PER BCCO COMMENTS
B	02.08.06		NO CHANGE THIS SHEET

date: 05-25-04
scale: 3/8" = 1"
dr. by: HAMID
chk. by:

drawing no.
W04-78

sheet 9 of 13

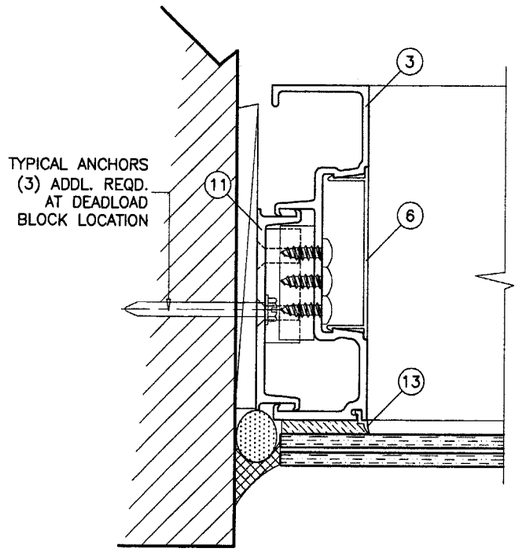

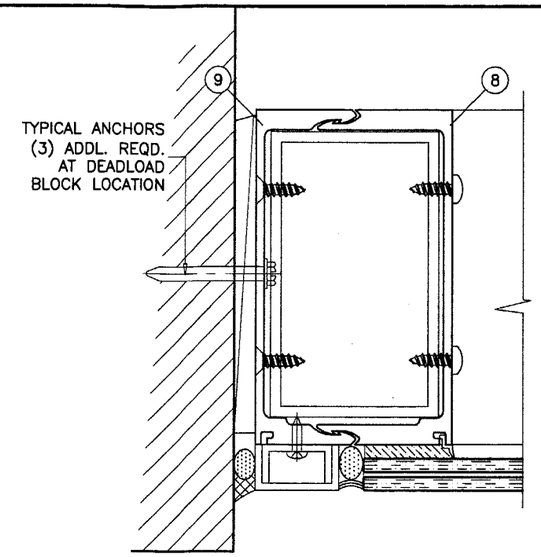

Approved as complying with the
Florida Buiding Code
Date MARCH 02, 2006
NOA# 05-0301.03
Miami Dade Product Control
Division
By Shaq I. Chanda

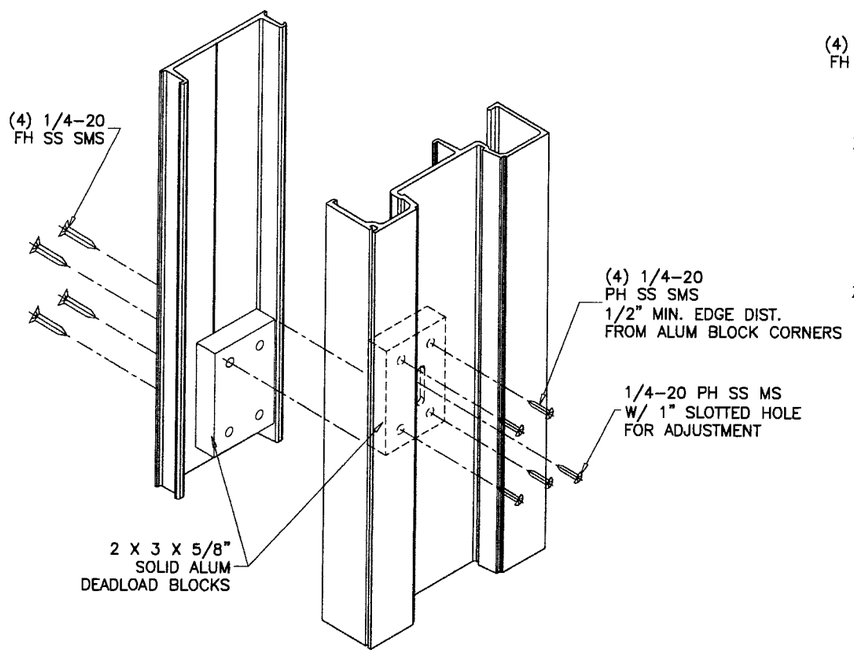

DEADLOAD BLOCKS DETAIL
TYPICAL JAMBS

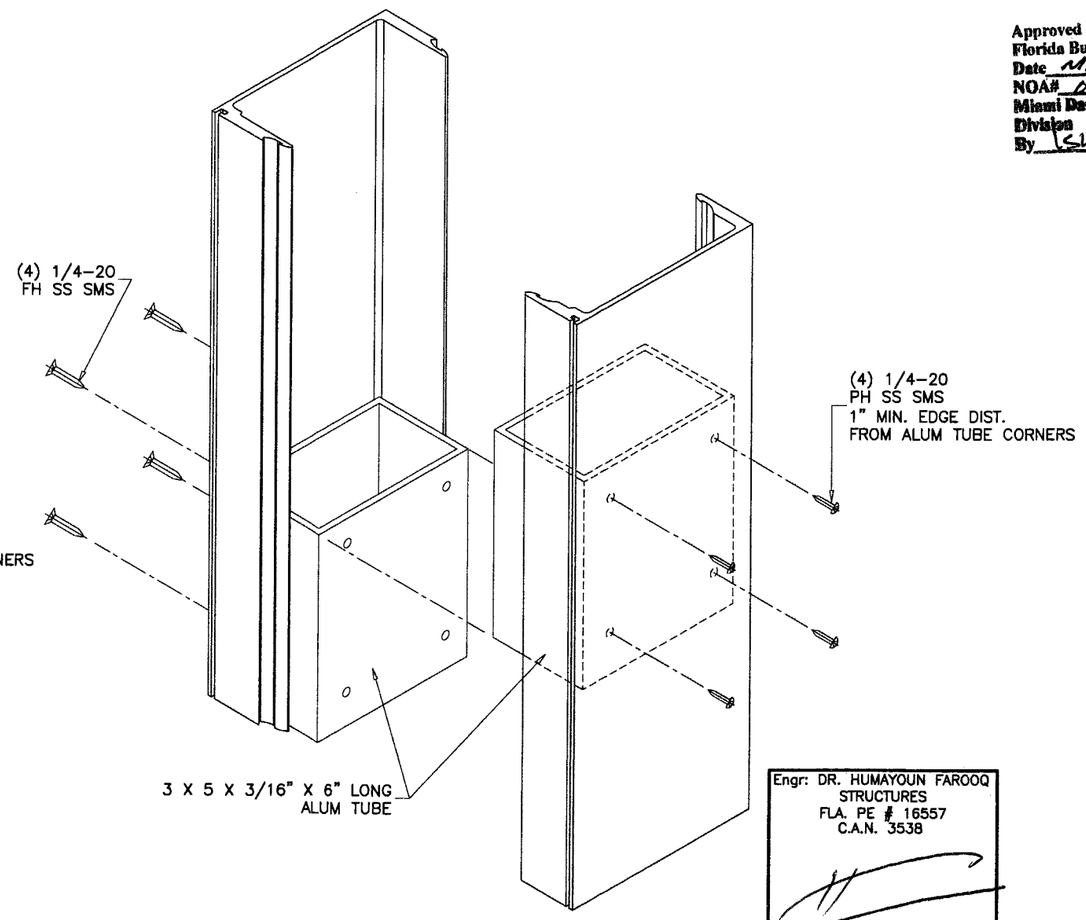

DEADLOAD BLOCKS DETAIL
ANCHORED MULLION AT JAMB

Engr: DR. HUMAYOUN FAROOQ
STRUCTURES
FLA. PE # 16557
C.A.N. 3538

FEB 09 2006

AL-FAROOQ CORPORATION
ENGINEERS, PLANNERS & PRODUCT DESIGN
1235 SW 87 AVE
MIAMI, FLORIDA 33174
TEL. (305) 264-8100 FAX. (305) 262-6978
STORE\W04-78CTC

PRO-TECH 7SG ALUM CURTAIN WALL SYSTEM (L.M.I.)

CRAWFORD TRACEY CORPORATION
3301 SW 13TH DRIVE
DEERFIELD BEACH, FL. 33442-8101
TEL. (954) 698-6888 FAX. (954) 698-6889

revisions:

no	date	by	description
A	09.16.05		NO CHANGE THIS SHEET
B	02.08.06		NO CHANGE THIS SHEET

date: 05-25-04
scale: 3/8" = 1"
dr. by: HAMID
chk. by:

drawing no.
W04-78

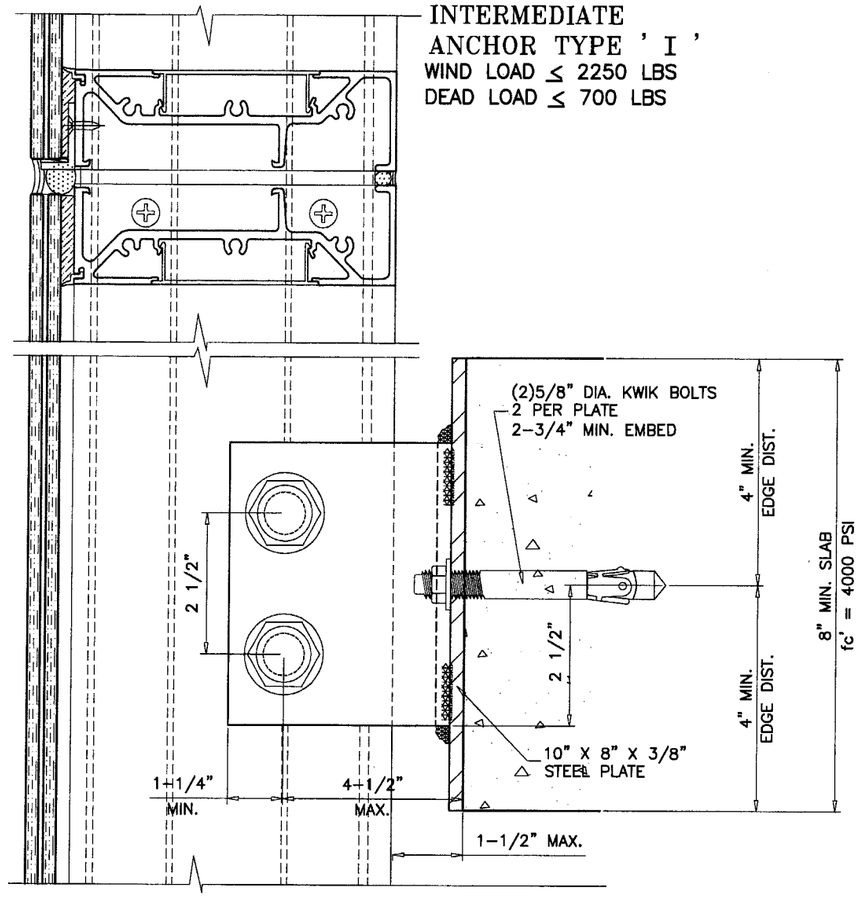

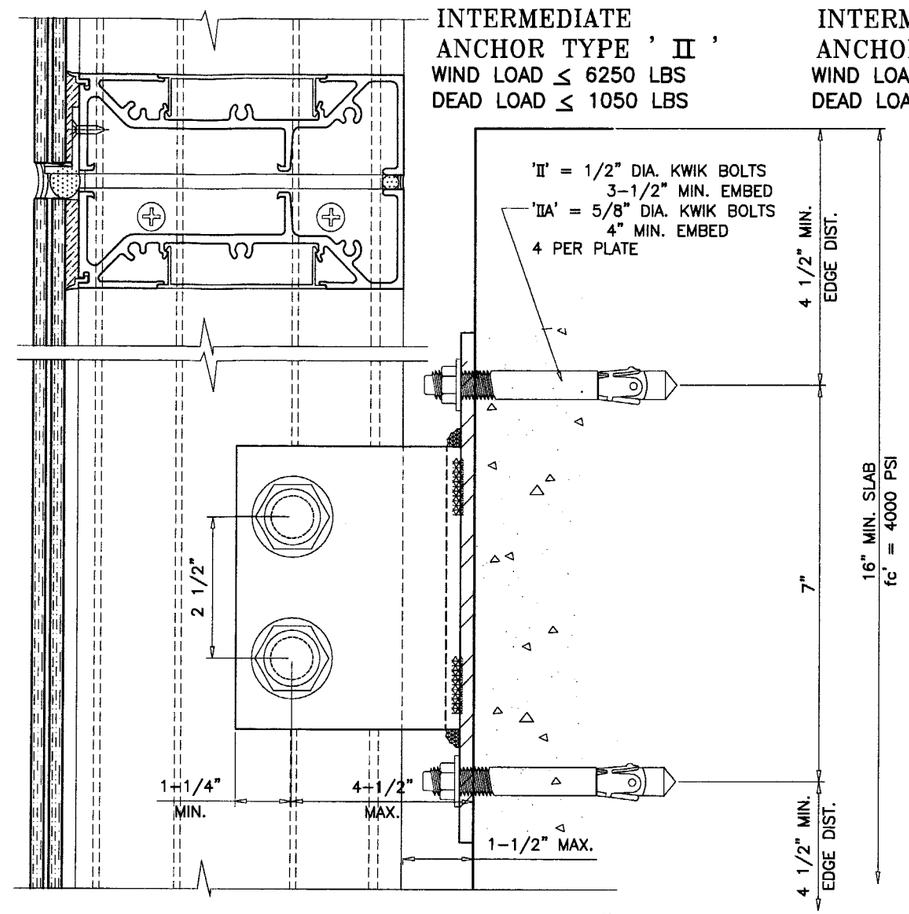

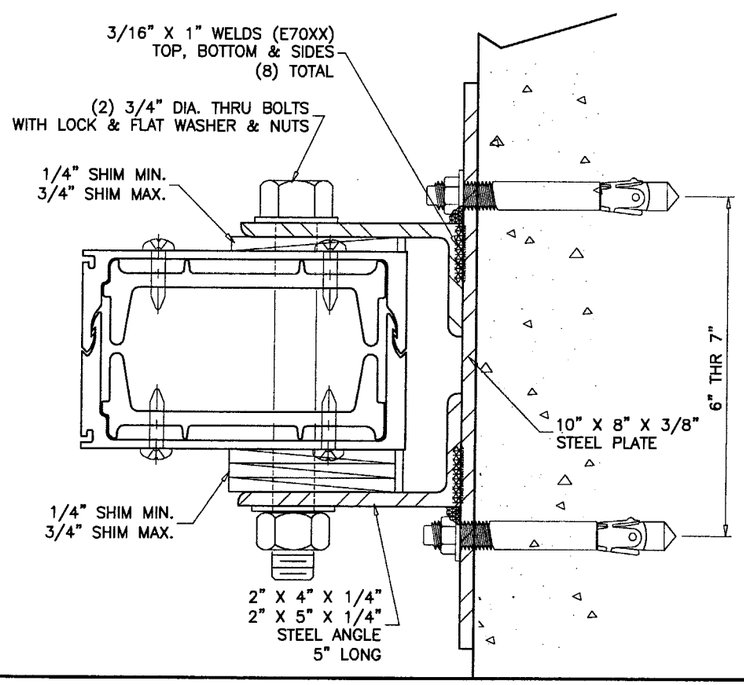

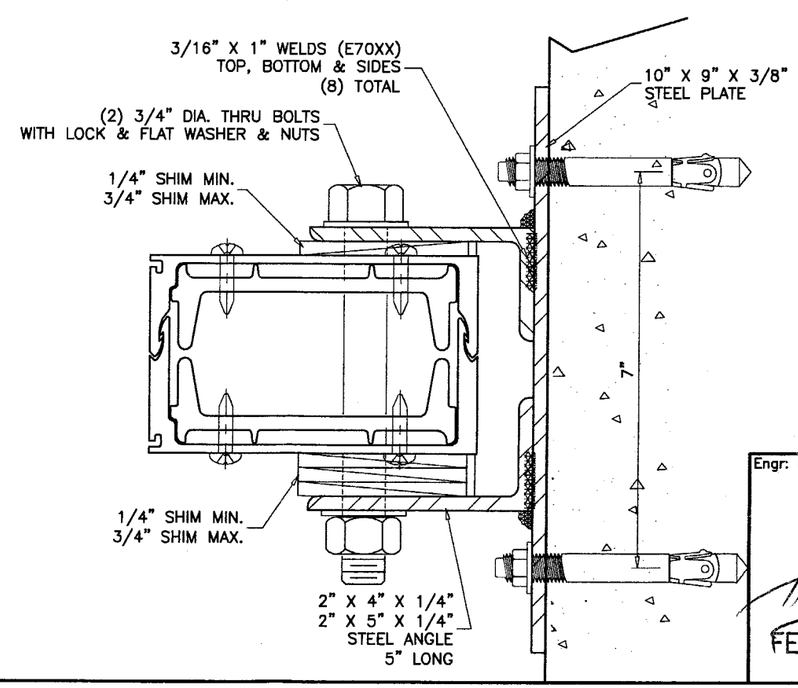

Approved as complying with the Florida Buiding Code
Date MARCH 02 2006
NOA# 05-0301.03
Miami Dade Product Control Division
By Ishaq I. Chanda

Engr: DR. HUMAYOUN FAROOQ
STRUCTURES
FLA. PE # 16557
C.A.N. 3538

FEB 09 2006

AL-FAROOQ CORPORATION
ENGINEERS, PLANNERS & PRODUCT DESIGN
1235 SW 87 AVE
MIAMI, FLORIDA 33174
TEL. (305) 264-8100 FAX. (305) 262-6978
STORE\W04-78CTC

PRO-TECH 7SG ALUM CURTAIN WALL SYSTEM (L.M.I.)

CRAWFORD TRACEY CORPORATION
3301 SW 13TH DRIVE
DEERFIELD BEACH, FL. 33442-8101
TEL. (954) 698-6888 FAX. (954) 698-6889

revisions:

no	date	by	description
A	09.16.05		REV. PER BCCO COMMENTS
B	02.08.06		NO CHANGE THIS SHEET

date: 05-25-04
scale: 3/8" = 1"
dr. by: HAMID
chk. by:

drawing no.
W04-78

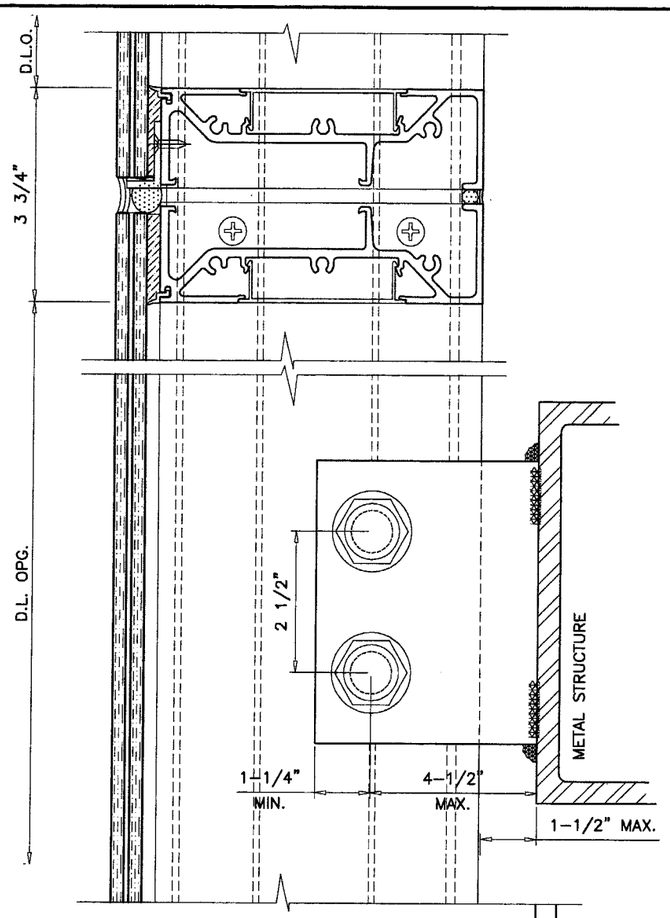

ITEM NO.	PART NO.	QUANTITY	DESCRIPTION	MATERIAL	MANF./SUPPLIER/REMARKS
1	170H340M	AS REQD.	FRAME HEAD/HORIZONTAL	6105-T5	–
2	170P175M	AS REQD.	FRAME HEAD/SILL	6105-T5	–
3	170J176	AS REQD.	FRAME JAMB	6105-T5	–
4	–	AS REQD.	INT. FILLER CHANNEL	ALUMINUM	–
5	–	AS REQD.	EXT. FILLER CHANNEL	ALUMINUM	–
6	T30U119	AS REQD.	SNAP IN COVER	6063-T6	–
8	170M113	AS REQD.	MALE JAMB/MULLION	6105-T5	–
8A	170M115	AS REQD.	ALT. MALE MULLION	6105-T5	–
9	170M114	AS REQD.	FEMALE JAMB/MULLION	6105-T5	–
9A	170M116	AS REQD.	ALT. FEMALE MULLION	6105-T5	–
10	170R140	AS REQD.	SPLICE	6105-T5	45" LONG
11	B32B070	AS REQD.	SUB-BUCK	6105-T5	–
12	–	AS REQD.	4" LONG SETTING PIECE	ALUMINUM	AT 1/4 POINTS
13	#2	AS REQD.	GLAZING SPACER	POLYPROPYLENE	–
15	1/4"X1-1/4"	AS REQD.	FRAME ASSEMBLY SCREWS	ST. STEEL	PAN HEAD PHILLIPS
16	C5 X 9	AS REQD.	STEEL CHANNEL	–	–

INTERMEDIATE
ANCHOR TYPE ' III '
WIND LOAD ≤ 8400 LBS
DEAD LOAD ≤ 1050 LBS

METAL STRUCTURES NOT BY CRAWFORD TRACEY, MUST SUPPORT LOADS IMPOSED BY GLAZING SYSTEM AND TRANSFER THEM TO THE BUILDING STRUCTURE.

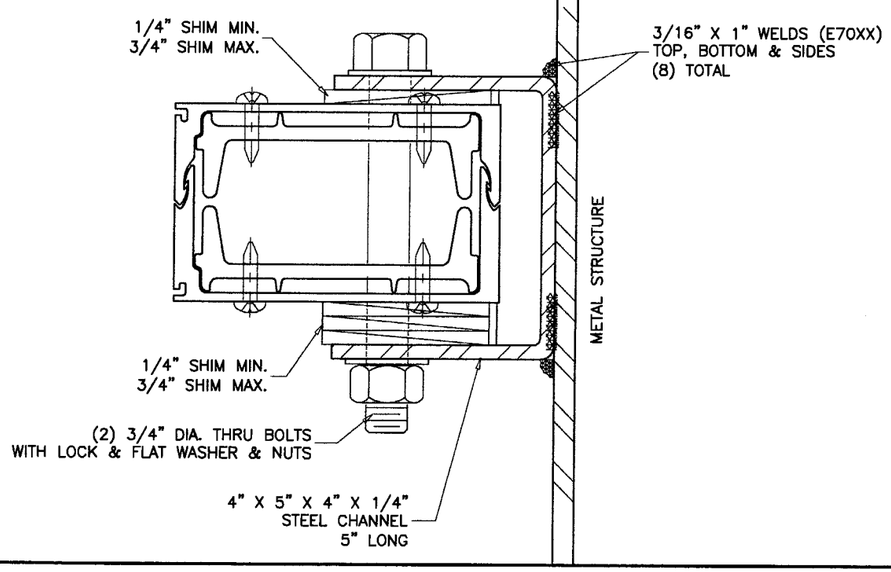

Approved as complying with the Florida Building Code
Date MARCH 02, 2006
NOA# 05-0301.03
Miami Dade Product Control Division
By Shaq J. Chanda

Engr: DR. HUMAYOUN FAROOQ
STRUCTURES
FLA. PE # 16557
C.A.N. 3538

FEB 09 2006

AL-FAROOQ CORPORATION
ENGINEERS, PLANNERS & PRODUCT DESIGN
1235 SW 87 AVE
MIAMI, FLORIDA 33174
TEL. (305) 264-8100 FAX. (305) 262-6978
STORE\W04-78CTC

PRO-TECH 7SG ALUM CURTAIN WALL SYSTEM (L.M.I.)

CRAWFORD TRACEY CORPORATION
3301 SW 13TH DRIVE
DEERFIELD BEACH, FL. 33442-8101
TEL. (954) 698-6888 FAX. (954) 698-6889

revisions:

no	date	by	description
A	09.16.05		REV. PER BCCO COMMENTS
B	02.08.06		REV. PER BCCO COMMENTS

date: 05-25-04
scale: 3/8" = 1"
dr. by: HAMID
chk. by:

drawing no.
W04-78

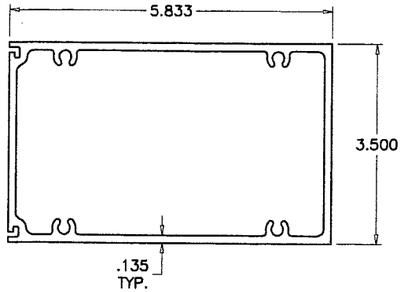

1 FRAME HEAD/HORIZONTAL

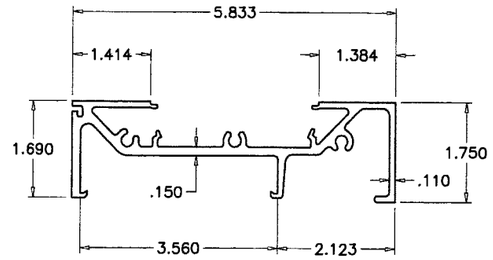

2 FRAME HEAD/SILL

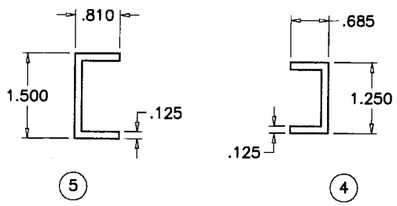

FILLER CHANNELS

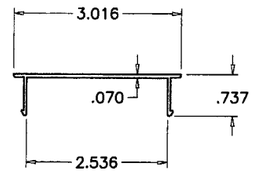

6 FRAME COVER

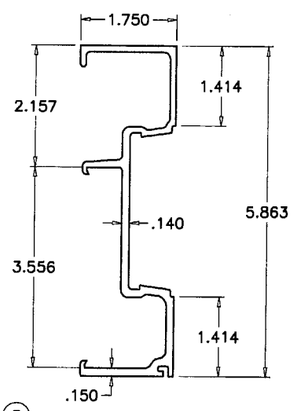

3 FRAME JAMB

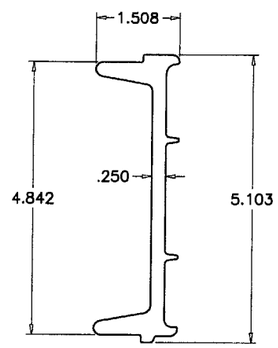

10 ALUM REINFORCING OR SPLICE

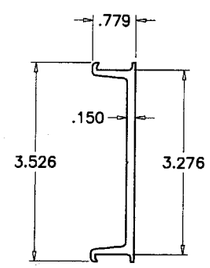

11 SUB BUCK

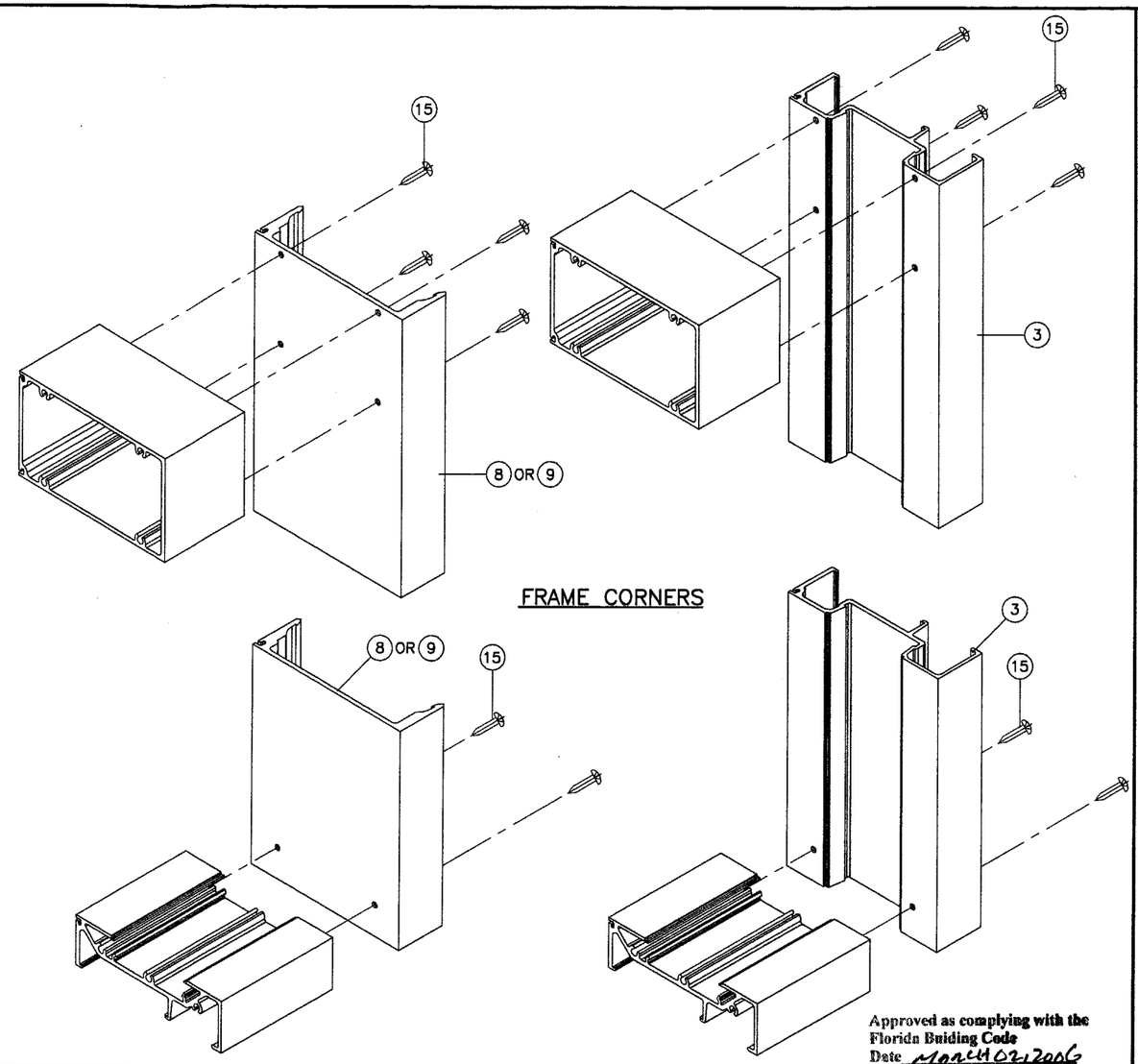

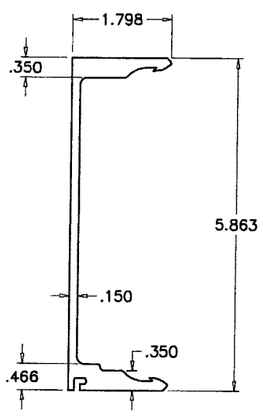

9 FEMALE JAMB/MULLION

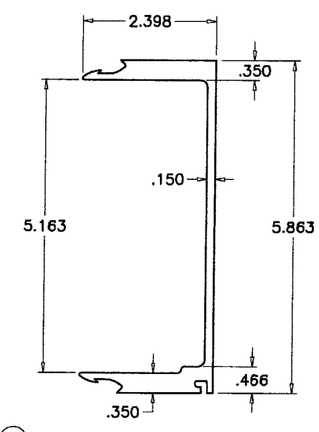

8 MALE JAMB/MULLION

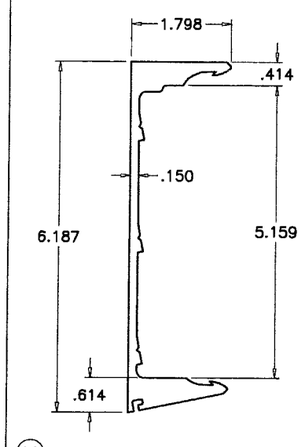

9A ALT. FEMALE MULLION

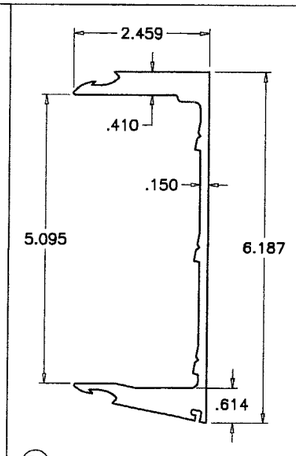

8A ALT. MALE MULLION

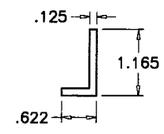

12 SETTING PIECE

Approved as complying with the Florida Buiding Code
Date MARCH 02 2006
NOA# 05-0301.03
Miami Dade Product Control Division
By Shaq I. Chauhan

Engr: DR. HUMAYOUN FAROOQ
STRUCTURES
FLA. PE # 16557
C.A.N. 3538

FEB 09 2006

AL-FAROOQ CORPORATION
ENGINEERS, PLANNERS & PRODUCT DESIGN
1235 SW 87 AVE
MIAMI, FLORIDA 33174
TEL. (305) 264-8100 FAX. (305) 262-6978

STORE\W04-78CTC

PRO-TECH 7SG ALUM CURTAIN WALL SYSTEM (L.M.I.)

CRAWFORD TRACEY CORPORATION
3301 SW 13TH DRIVE
DEERFIELD BEACH, FL. 33442-8101
TEL. (954) 698-6888 FAX. (954) 698-6889

revisions:

no	date	by	description
A	09.16.05		REV. PER BCCO COMMENTS
B	02.08.06		NO CHANGE THIS SHEET

date: 05-25-04
scale: 3/8" = 1"
dr. by: HAMID
chk. by:

drawing no.
W04-78

sheet 13 of 13