MIAMI-DADE COUNTY
BUILDING CODE COMPLIANCE OFFICE (BCCO)
PRODUCT CONTROL DIVISION

MIAMI-DADE COUNTY, FLORIDA
METRO-DADE FLAGLER BUILDING

140 WEST FLAGLER STREET, SUITE 1603
MIAMI, FLORIDA 33130-1563
(305) 375-2901 FAX (305) 375-2908
www.buildingcodeonline.com

NOTICE OF ACCEPTANCE (NOA)

YKK AP America
332 Firetower Road
Dublin, GA 31021

SCOPE:

This NOA is being issued under the applicable rules and regulations governing the use of construction materials. The documentation submitted has been reviewed by Miami-Dade County Product Control Division and accepted by the Board of Rules and Appeals (BORA) to be used in Miami Dade County and other areas where allowed by the Authority Having Jurisdiction (AHJ).

This NOA shall not be valid after the expiration date stated below. The Miami-Dade County Product Control Division (In Miami Dade County) and/or the AHJ (in areas other than Miami Dade County) reserve the right to have this product or material tested for quality assurance purposes. If this product or material fails to perform in the accepted manner, the manufacturer will incur the expense of such testing and the AHJ may immediately revoke, modify, or suspend the use of such product or material within their jurisdiction. BORA reserves the right to revoke this acceptance, if it is determined by Miami-Dade County Product Control Division that this product or material fails to meet the requirements of the applicable building code.

This product is approved as described herein, and has been designed to comply with the Florida Building Code, including the High Velocity Hurricane Zone.

DESCRIPTION: Series YVS 410 TUH Aluminum Fixed Window-L.M.I.

APPROVAL DOCUMENT: Drawing No. **W04-77,** titled "Series YVS 410TUH Aluminum Fixed Window (L.M.I.)", sheets 1 through 5 of 5, prepared by AL-Farooq Corporation, dated 09/02/04 with revision "**A**" on 05/10/05, signed and sealed by Humayoun Farooq, P.E., bearing the Miami-Dade County Product Control Approval stamp with the Notice of Acceptance number and approval date by the Miami-Dade County Product Control Division.

MISSILE IMPACT RATING: Large and Small Missile Impact

LABELING: Each unit shall bear a permanent label with the manufacturer's name or logo, city, state and following statement: "Miami-Dade County Product Control Approved", unless otherwise noted herein.

RENEWAL of this NOA shall be considered after a renewal application has been filed and there has been no change in the applicable building code negatively affecting the performance of this product.

TERMINATION of this NOA will occur after the expiration date or if there has been a revision or change in the materials, use, and/or manufacture of the product or process. Misuse of this NOA as an endorsement of any product, for sales, advertising or any other purposes shall automatically terminate this NOA. Failure to comply with any section of this NOA shall be cause for termination and removal of NOA.

ADVERTISEMENT: The NOA number preceded by the words Miami-Dade County, Florida, and followed by the expiration date may be displayed in advertising literature. If any portion of the NOA is displayed, then it shall be done in its entirety.

INSPECTION: A copy of this entire NOA shall be provided to the user by the manufacturer or its distributors and shall be available for inspection at the job site at the request of the Building Official.

This NOA consists of this page 1 and evidence pages E-1 and E-2, as well as approval document mentioned above

The submitted documentation was reviewed by **Herminio F. Gonzalez, P.E., Director, BCCO**

PRODUCT CONTROL ACCEPTED

5/26/2005

NOA No 05-0301.06
Expiration Date: June 16, 2010
Approval Date: June 16, 2005

YKK AP America

NOTICE OF ACCEPTANCE: EVIDENCE SUBMITTED

A. DRAWINGS

1. Manufacturers die drawings and sections.
2. Drawing No. **W04-77,** titled "Series YVS 410TUH Aluminum Fixed Window (L.M.I.)", sheets 1 through 5 of 5, prepared by AL-Farooq Corporation, dated 09/02/04 with revision "A" on 05/10/05, signed and sealed by Humayoun Farooq, P.E.

B. TESTS

1. Test reports on 1) Air Infiltration Test, per FBC, TAS 202-94
   2) Uniform Static Air Pressure Test, Loading per FBC, TAS 202-94
   3) Water Resistance Test, per FBC, TAS 202-94
   4) Large Missile Impact Test per FBC, TAS 201-94
   5) Cyclic Wind Pressure Loading per FBC, TAS 203-94

   along with marked-up drawings and installation diagram of aluminum fixed window, prepared by Hurricane Test Laboratory, LLC, Test Report No. **HTL-0231-0118-04,** (specimen 1, 2, & 4) dated 11/29-12/02/04, signed and sealed by Vinu J. Abraham, P.E.
2. Test reports on 1) Air Infiltration Test, per FBC, TAS 202-94
   2) Uniform Static Air Pressure Test, Loading per FBC, TAS 202-94
   3) Water Resistance Test, per FBC, TAS 202-94
   4) Large Missile Impact Test per FBC, TAS 201-94
   5) Cyclic Wind Pressure Loading per FBC, TAS 203-94

   along with marked-up drawings and installation diagram of aluminum fixed window, prepared by Hurricane Test Laboratory, LLC, Test Report No. **HTL-0231-0410-04,** dated 06/01-03/04 (specimen 1, 2, 3,4,5,6, & 7) signed and sealed by Vinu J. Abraham, P.E.

C. CALCULATIONS

1. Anchor Calculations, ASTM-E1300, and structural analysis, prepared by AL-Farooq Corporation, dated 01/25/05, signed and sealed by Humayoun Farooq, P.E.

D. QUALITY ASSURANCE

1. Miami Dade Building Code Compliance Office (BCCO).

E. MATERIAL CERTIFICATIONS

1. Notice of Acceptance No. 02-1205.03 issued to "Security Impact Glass Holding L.L.C." for "SAF-GLAS Polycarbonate Laminate" dated 01/02/03, expiring on 12/16/07.
2. Notice of Acceptance No. 03-0415.13 issued to "Solutia, Inc." for "Vanceva Composites" dated 12/11/03, expiring on 12/11/08.

for M Khate

Herminio F. Gonzalez, P.E.
Director, Building Code Compliance Office
NOA No 05-0301.06
Expiration Date: June 16, 2010
Approval Date: June 16, 2005

NOTICE OF ACCEPTANCE: EVIDENCE SUBMITTED

F. STATEMENTS

1. Statement letter of conformance and no financial interest, dated 01/24/05, signed and sealed by Humayoun Farooq, P.E.

G. OTHER

1. Letter from the consultant stating that the product is in compliance with the Florida Building Code (FBC).

for M Khalk

Herminio F. Gonzalez, P.E.
Director, Building Code Compliance Office
NOA No 05-0301.06
Expiration Date: June 16, 2010
Approval Date: June 16, 2005

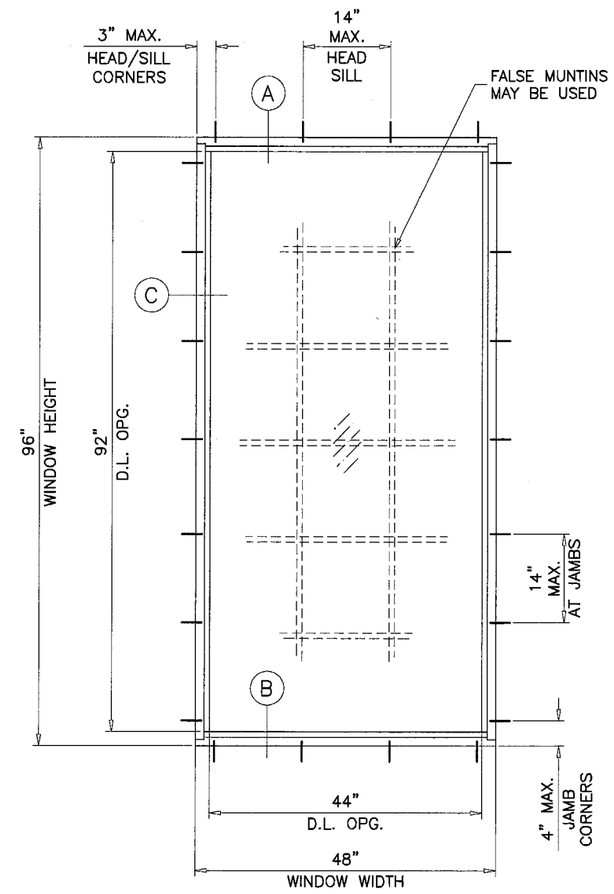

TYPICAL ELEVATION

TESTED UNIT

THESE WINDOWS ARE RATED FOR LARGE MISSILE IMPACT.
SHUTTERS ARE NOT REQUIRED.

SERIES YVS 410TUH
ALUMINUM FIXED WINDOW

DESIGN LOAD RATINGS FOR THESE WINDOWS TO BE AS PER CHARTS SHOWN ON SHEET 2.

APPROVAL APPLIES TO SINGLE FIXED WINDOWS,
ALSO COMBINATIONS OF FIXED/FIXED OR FIXED WITH OTHER MIAMI-DADE COUNTY APPR'D WINDOWS USING MIAMI-DADE COUNTY APPROVED MULLIONS IN BETWEEN.
LOWER DESIGN PRESSURE FROM WINDOWS OR MULLION APPROVAL WILL APPLY TO ENTIRE SYSTEM.

THIS PRODUCT HAS BEEN DESIGNED AND TESTED TO COMPLY WITH THE REQUIREMENTS OF THE FLORIDA BUILDING CODE INCLUDING HIGH VELOCITY HURRICANE ZONE.

WOOD BUCKS BY OTHERS, MUST BE ANCHORED PROPERLY TO TRANSFER LOADS TO THE STRUCTURE.

ANCHORS SHALL BE AS LISTED, SPACED AS SHOWN ON DETAILS. ANCHOR EMBEDMENT TO BASE MATERIAL SHALL BE BEYOND WALL DRESSING OR STUCCO.

ANCHORING OR LOADING CONDITIONS NOT SHOWN IN THESE DETAILS ARE NOT PART OF THIS APPROVAL.

A 33% INCREASE IN ALLOWABLE STRESS WAS USED IN DESIGN OF ANCHORS.

Approved as complying with the
Florida Building Code
Date 06/16/05
NOA# 05-0301.06
Miami-Dade Product Control
Division
By

LAMINATED INSULATING GLASS
LARGE MISSILE IMPACT

Engr: DR. HUMAYOUN FAROOQ
STRUCTURES
FLA. PE # 16557
C.A.N. 3538

MAY 16 2005

AL-FAROOQ CORPORATION
ENGINEERS, PLANNERS & PRODUCT DESIGN
1235 SW 87 AVE
MIAMI, FLORIDA 33174
TEL. (305) 264-8100 FAX. (305) 262-6978

COMP-ANL\W04-77YKK

YVS 410TUH ALUMINUM FIXED WINDOW (L.M.I.)

YKK AP AMERICA INC.
332 FIRETOWER ROAD
DUBLIN, GEORGIA 31021
TEL.(478) 277-1955 FAX(478) 277-1978

revisions:

no	date	by	description
A	05.10.05		NO CHANGE THIS SHEET

date: 09-02-04
scale: 1/2"=1'-0"
dr. by: HAMID
chk. by:

drawing no.
W04-77

sheet 1 of 5

DESIGN LOAD CAPACITY – PSF			
WINDOW DIMS.		GLASS TYPE 'A' & 'B'	
WIDTH (W)	LENGTH (L)	EXT.(+)	INT.(–)
18"	36"	80.0	120.0
24"		80.0	120.0
30"		80.0	120.0
36"		80.0	120.0
42"		80.0	120.0
48"		80.0	120.0
54"		80.0	120.0
60"		80.0	120.0
18"	48"	80.0	120.0
24"		80.0	120.0
30"		80.0	120.0
36"		80.0	120.0
42"		80.0	120.0
48"		80.0	120.0
54"		80.0	120.0
60"		80.0	120.0
18"	60"	80.0	120.0
24"		80.0	120.0
30"		80.0	120.0
36"		80.0	120.0
42"		80.0	120.0
48"		80.0	120.0
54"		71.1	106.7
60"		64.0	96.0
18"	72"	80.0	120.0
24"		80.0	120.0
30"		80.0	120.0
36"		80.0	120.0
42"		80.0	120.0
48"		80.0	119.9
54"		71.1	106.7
60"		64.0	96.0
18"	84"	80.0	120.0
24"		80.0	120.0
30"		80.0	120.0
36"		80.0	120.0
42"		80.0	119.3
48"		80.0	100.6
54"		71.1	89.9
18"	90"	80.0	120.0
24"		80.0	120.0
30"		80.0	120.0
36"		80.0	120.0
42"		80.0	112.1
48"		80.0	93.0
18"	96"	80.0	120.0
24"		80.0	120.0
30"		80.0	120.0
36"		80.0	120.0
42"		80.0	106.4
48"		80.0	86.8

DESIGN LOAD CAPACITY – PSF			
WINDOW DIMS.		GLASS TYPE 'A' & 'B'	
WIDTH (W)	LENGTH (L)	EXT.(+)	INT.(–)
18"	108"	80.0	120.0
24"		80.0	120.0
30"		80.0	120.0
36"		80.0	120.0
42"		80.0	98.3
18"	120"	80.0	120.0
24"		80.0	120.0
30"		80.0	120.0
36"		80.0	120.0

DESIGN LOAD CAPACITY – PSF			
WINDOW DIMS.		GLASS TYPE 'A' & 'B'	
WIDTH (W)	LENGTH (L)	EXT.(+)	INT.(–)
19–1/8"	26"	80.0	120.0
26–1/2"		80.0	120.0
37"		80.0	120.0
48"		80.0	120.0
53–1/8"		80.0	120.0
19–1/8"	38–3/8"	80.0	120.0
26–1/2"		80.0	120.0
37"		80.0	120.0
48"		80.0	120.0
53–1/8"		80.0	120.0
19–1/8"	50–5/8"	80.0	120.0
26–1/2"		80.0	120.0
37"		80.0	120.0
48"		80.0	120.0
53–1/8"		75.9	113.8
19–1/8"	58"	80.0	120.0
26–1/2"		80.0	120.0
37"		80.0	120.0
48"		80.0	120.0
53–1/8"		72.3	108.4
19–1/8"	63"	80.0	120.0
26–1/2"		80.0	120.0
37"		80.0	120.0
48"		80.0	120.0
53–1/8"		72.3	108.4
19–1/8"	74–1/4"	80.0	120.0
26–1/2"		80.0	120.0
37"		80.0	120.0
48"		80.0	115.7
53–1/8"		72.3	105.2

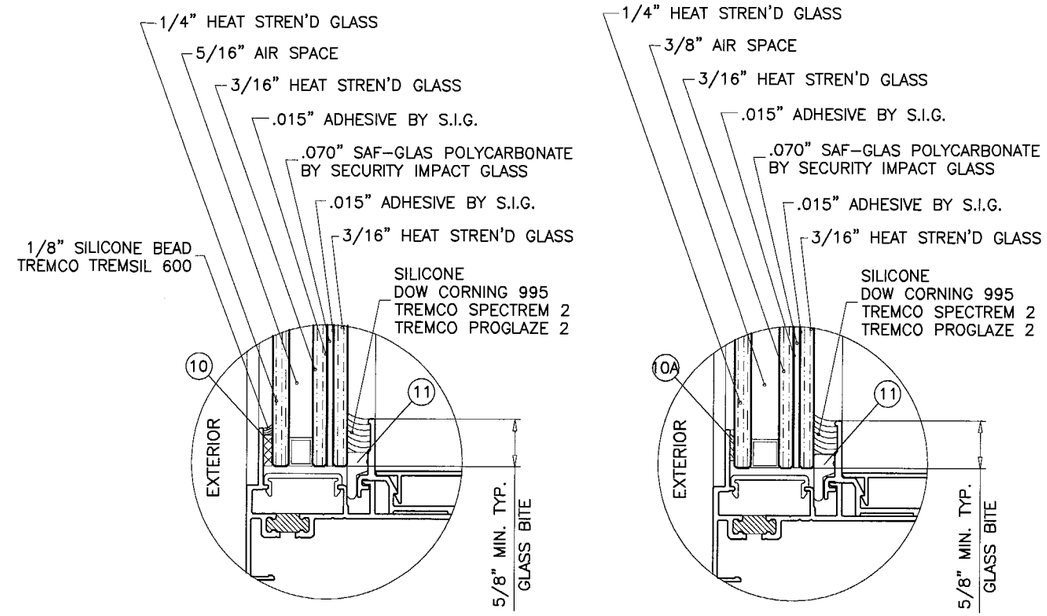

GLASS TYPE 'A'

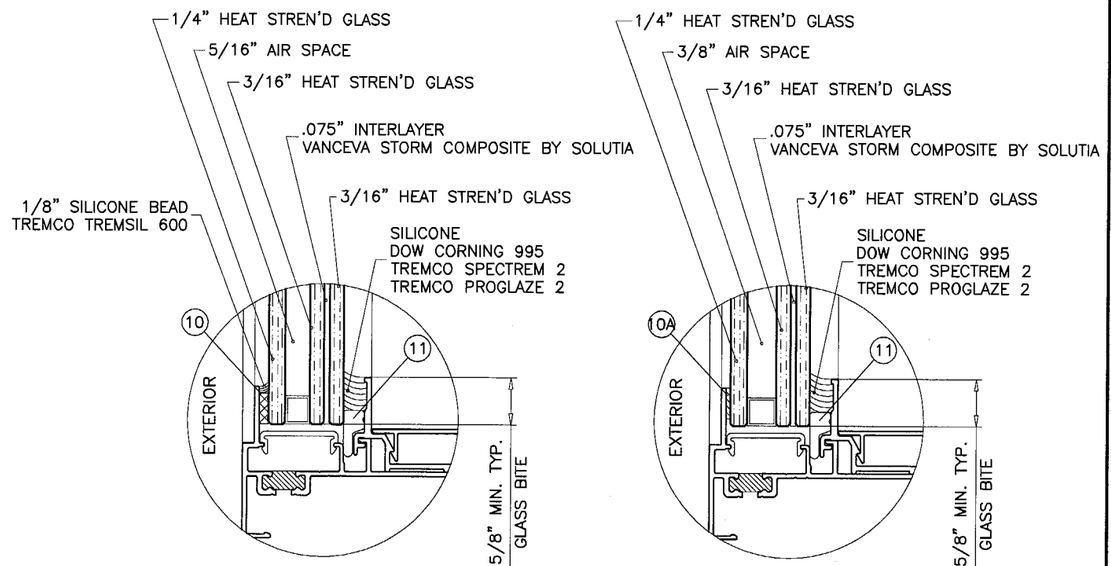

GLASS TYPE 'B'

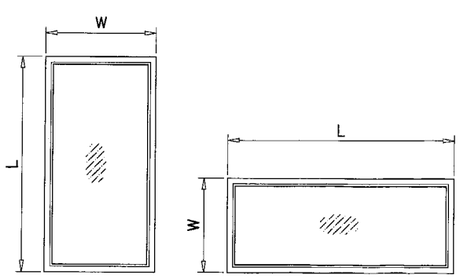

NOTE:
WIDTH AND LENGTH DIMENSIONS CAN BE ORIENTED VERTICALLY OR HORIZONTALLY AS SHOWN ABOVE.

Approved as complying with the Florida Buiding Code
Date 06/16/05
NOA# 05-0301.06
Miami-Dade Product Control Division
By

Engr: DR. HUMAYOUN FAROOQ
STRUCTURES
FLA. PE # 16557
C.A.N. 3538

MAY 1 6 2005

AL-FAROOQ CORPORATION
ENGINEERS, PLANNERS & PRODUCT DESIGN
1235 SW 87 AVE
MIAMI, FLORIDA 33174
TEL. (305) 264-8100 FAX. (305) 262-6978
COMP-ANL\W04-77YKK

YS 410TUH ALUMINUM FIXED WINDOW (L.M.I.)

YKK AP AMERICA INC.
332 FIRETOWER ROAD
DUBLIN, GEORGIA 31021
TEL(478) 277-1955 FAX(478) 277-1978

revisions:			
no	date	by	description
A	05.10.05		NO CHANGE THIS SHEET

date: 09-02-04
scale: –
dr. by: HAMID
chk. by:

drawing no.
W04-77

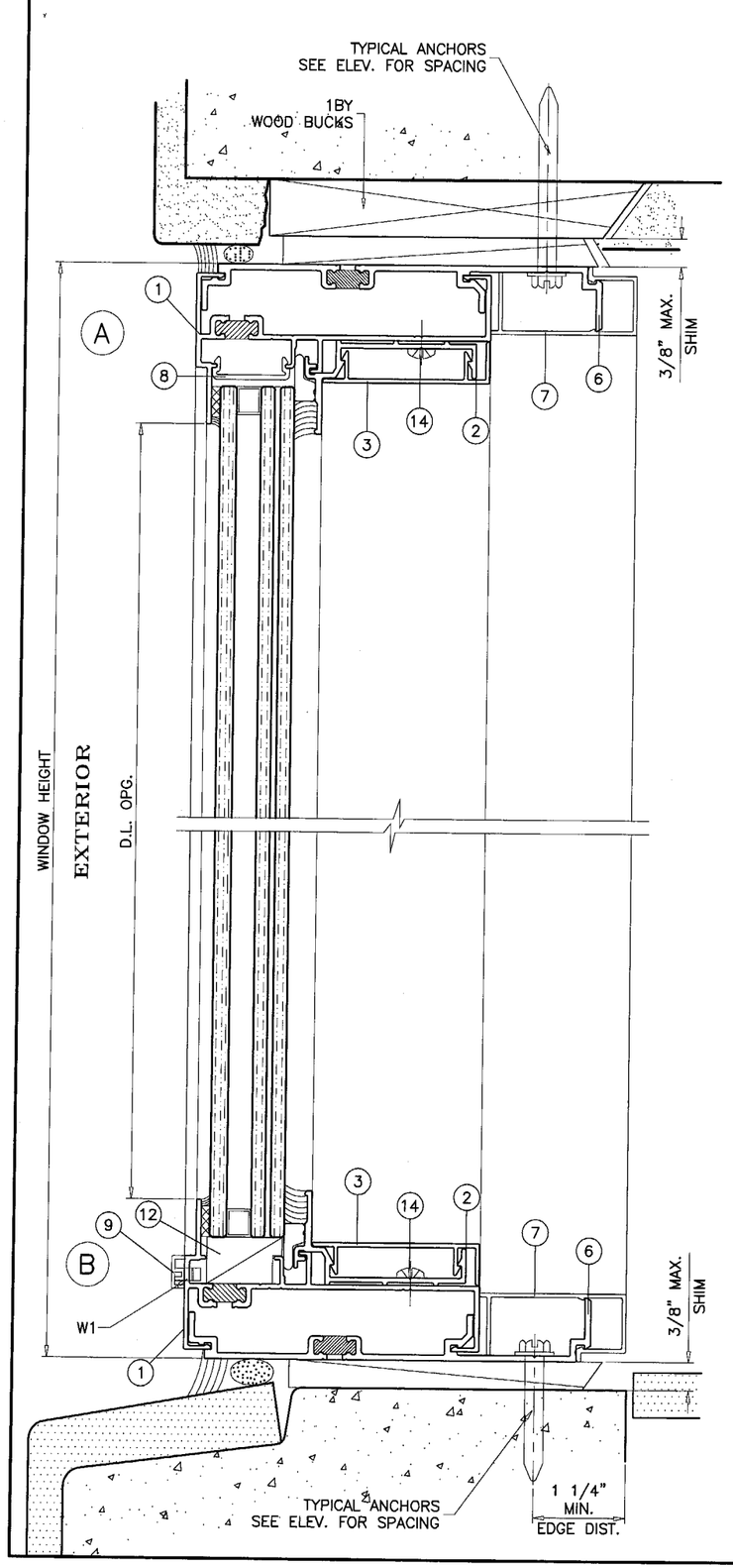

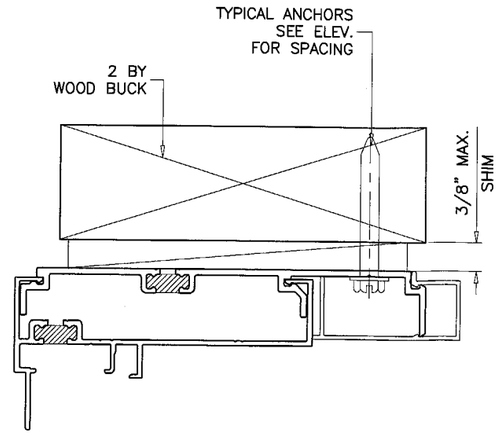

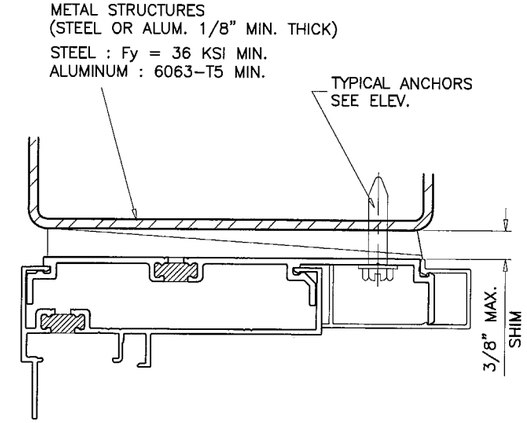

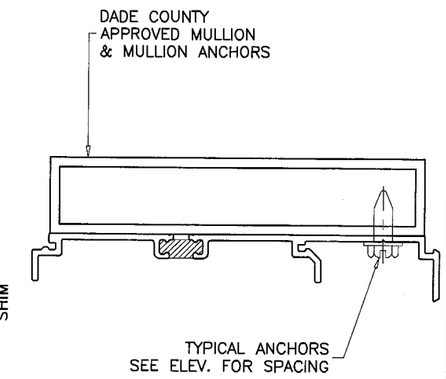

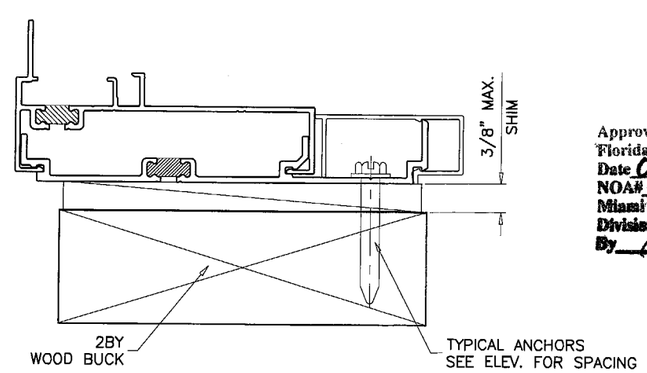

WOOD BUCKS NOT BY YKK AMERICA INC. MUST SUSTAIN LOADS IMPOSED BY GLAZING SYSTEM AND TRANSFER THEM TO THE BUILDING STRUCTURE.

TYPICAL ANCHORS: SEE ELEV. FOR SPACING

1/4" DIA. TAPCONS

INTO WOOD STRUCTURES
WITH 1-1/2" MIN. PENETRATION INTO WOOD

THRU WOOD BUCKS INTO MASONRY
WITH 1-1/4" MIN. EMBED INTO CONC. OR MASONRY

1/4" DIA. TAPCONS

DIRECTLY INTO MASONRY
WITH 1-1/4" MIN. EMBED INTO MASONRY

1/4" DIA. ELCO DRILLFLEX OR EQUIV.

INTO METAL STRUCTURES
(STEEL OR ALUMINUM 1/8" MIN. THICK.)

STEEL : Fy = 36 KSI MIN.
ALUMINUM : 6063-T5 MIN.

TYPICAL EDGE DISTANCE

INTO CONCRETE AND MASONRY = 1-1/4" MIN.
INTO WOOD STRUCTURE = 1" MIN.

SEALANTS:

TREMCO SPECTRUM 2 SILICONE SEALANT AT PERIMETER.
GE SILGLAZE II SILICONE AT FRAME & VENT JOINTS.

WEEP HOLES:

W1 = 1/4" X 1-1/16" WEEP SLOT AT CENTER OF SILL WITH NYLON COVER.

Approved as complying with the Florida Building Code
Date 06/16/05
NOA# 05-0301.06
Miami Dade Product Control Division
By

Engr: DR. HUMAYOUN FAROOQ
STRUCTURES
FLA. PE # 16557
C.A.N. 3538

MAY 16 2005

AL-FAROOQ CORPORATION
ENGINEERS, PLANNERS & PRODUCT DESIGN
1235 SW 87 AVE
MIAMI, FLORIDA 33174
TEL. (305) 264-8100 FAX. (305) 262-6978
COMP-ANL\W04-77YKK

YVS 410TUH ALUMINUM FIXED WINDOW (L.M.I.)

YKK AP AMERICA INC.
332 FIRETOWER ROAD
DUBLIN, GEORGIA 31021
TEL.(478) 277-1955 FAX(478) 277-1978

revisions:

no	date	by	description
A	05.10.05		NO CHANGE THIS SHEET

date: 09-02-04
scale: 1/2" = 1"
dr. by: HAMID
chk. by:

drawing no. W04-77

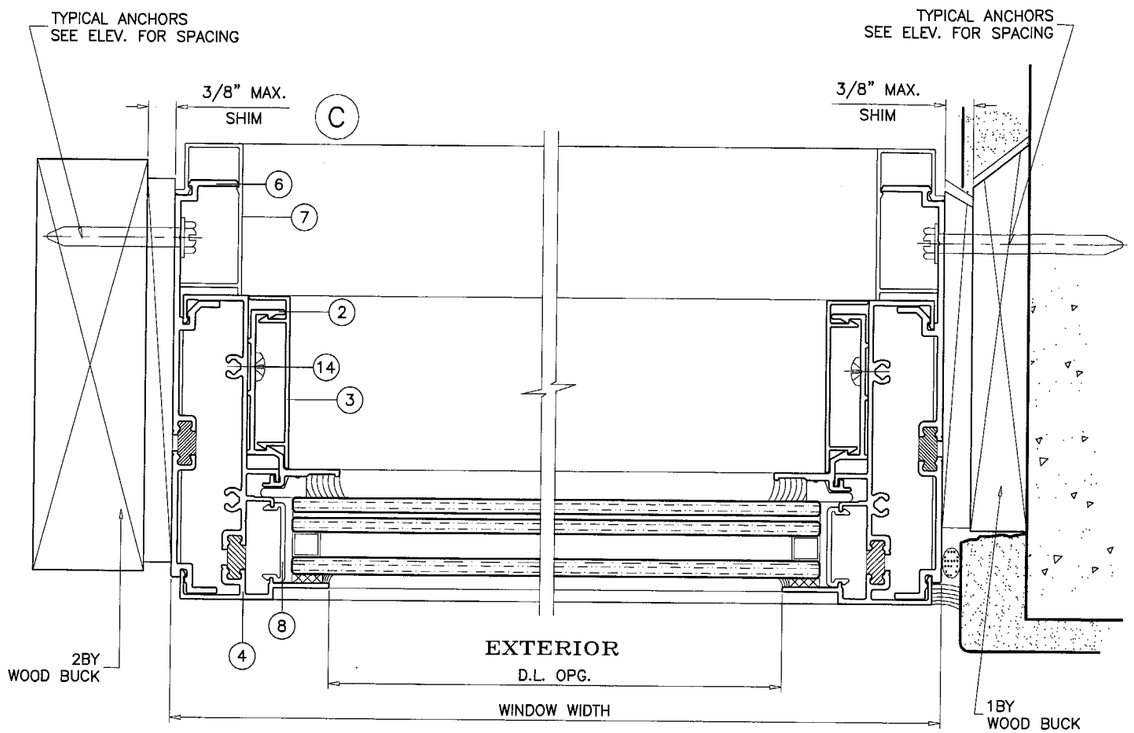

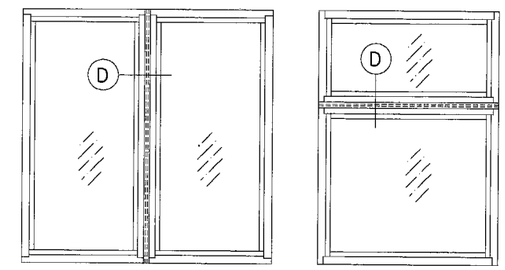

FIXED/FIXED OR FIXED WITH OTHER
MIAMI–DADE COUNTY APPR'D WINDOWS COMBINATIONS.

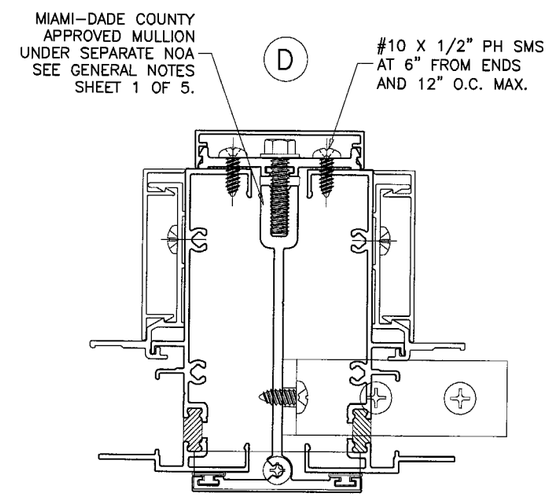

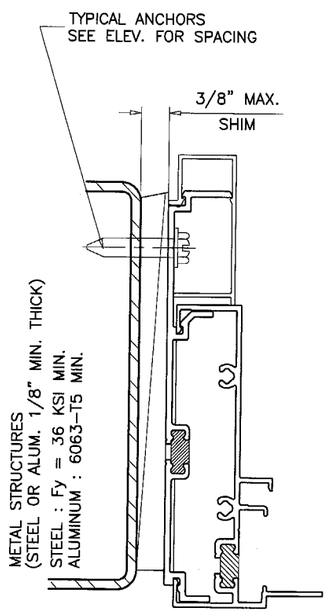

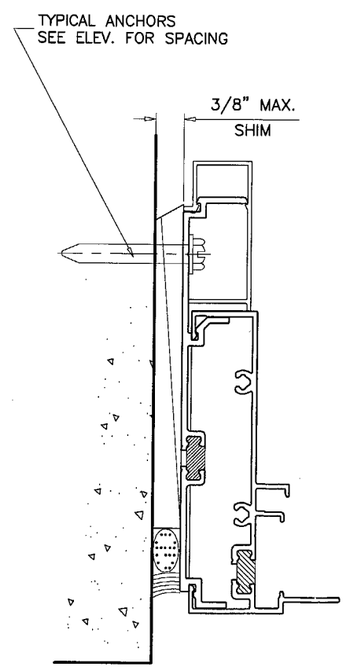

Approved as complying with the
Florida Building Code
Date 06/16/05
NOA# 05-0301.06
Miami Dade Product Control
Division
By

Engr: DR. HUMAYOUN FAROOQ
STRUCTURES
FLA. PE # 16357
C.A.N. 3538

MAY 1 6 2005

AL-FAROOQ CORPORATION
ENGINEERS, PLANNERS & PRODUCT DESIGN
1235 SW 87 AVE
MIAMI, FLORIDA 33174
TEL. (305) 264-8100 FAX. (305) 262-6978

COMP-ANL\W04-77YKK

YWS 410TUH ALUMINUM FIXED WINDOW (L.M.I.)

YKK AP AMERICA INC.
332 FIRETOWER ROAD
DUBLIN, GEORGIA 31021
TEL.(478) 277-1955 FAX(478) 277-1978

revisions:

no	date	by	description
A	05.10.05		REV. PER BCCO COMMENTS

date: 09-02-04
scale: 1/2" = 1"
dr. by: HAMID
chk. by:

drawing no.
W04-77

sheet 4 of 5

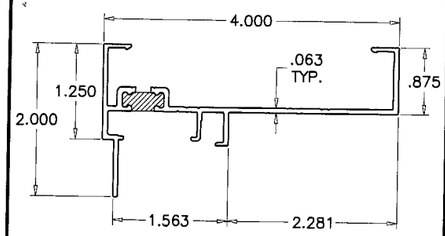

1 FRAME HEAD/SILL

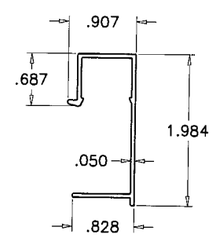

7 STRAP ANCHOR COVER

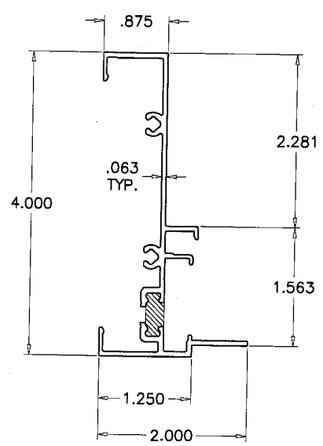

4 FRAME JAMB

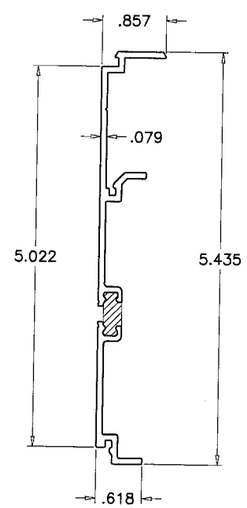

6 STRAP ANCHOR

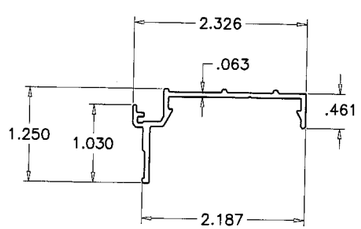

2 GLASS STOP BASE

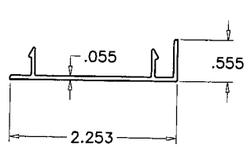

3 GLASS STOP COVER

ITEM #	PART #	REQD.	DESCRIPTION	MATERIAL	MANF./SUPPLIER/REMARKS
1	BE9-4701	2	FRAME HEAD/SILL	6063-T5	–
2	E9-4719	4	GLASS STOP BASE	6063-T5	–
3	E9-4720	4	GLASS STOP COVER	6063-T5	–
4	BE9-4714	2	FRAME JAMB	6063-T5	–
5	–	–	–	–	–
6	BE9-8567	AS REQD.	STRAP ANCHOR	6063-T5	–
7	E9-8431	AS REQD.	STRAP ANCHOR COVER	6063-T5	–
8	E3-1111	–	–	–	–
9	E3-1127	1	WEEP HOLE COVER	NYLON	AT CENTERLINE OF SILL
10	E2-0670	AS REQD.	BACKER TAPE FOR 1/8" F.C.	POLYURETHANE	–
10A	E2-0667	AS REQD.	1/16" EXTERIOR GASKET	EPDM SPONGE	–
11	E2-0668	AS REQD.	SPACER	DUROMETER	–
12	E2-0662	AS REQD.	SETTING BLOCK	EPDM	–
13	#10 X 1"	2/ CORNER	FRAME ASSEMBLY SCREWS	ST. STEEL	PH SMS
14	#10 X 5/8"	AS REQD.	GLAZING STOP SCREWS, AT 12" O.C. MAX.	ST. STEEL	PH SMS

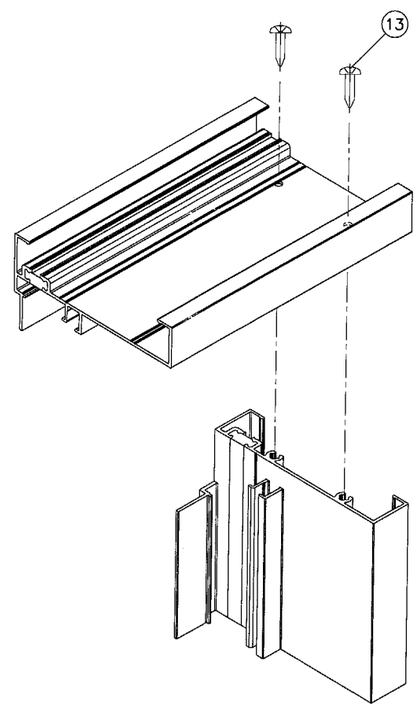

FRAME CORNER

Approved as complying with the Florida Buiding Code
Date 06/16/05
NOA# 05-0301.06
Miami Dade Product Control Division
By

Engr: DR. HUMAYOUN FAROOQ
STRUCTURES
FLA. PE # 16557
C.A.N. 3538

MAY 1 6 2005

AL-FAROOQ CORPORATION
ENGINEERS, PLANNERS & PRODUCT DESIGN
1235 SW 87 AVE
MIAMI, FLORIDA 33174
TEL. (305) 264-8100 FAX. (305) 262-6978
COMP-ANL\W04-77YKK

YVS 410TUH ALUMINUM FIXED WINDOW (L.M.I.)

YKK ap™
YKK AP AMERICA INC.
332 FIRETOWER ROAD
DUBLIN, GEORGIA 31021
TEL(478) 277-1955 FAX(478) 277-1978

revisions:

no	date	by	description
A	05.10.05		NO CHANGE THIS SHEET

date: 09-02-04
scale: 1/2" = 1"
dr. by: HAMID
chk. by:

drawing no.
W04-77

sheet 5 of 5