MIAMI-DADE

BUILDING CODE COMPLIANCE OFFICE (BCCO)
PRODUCT CONTROL DIVISION

MIAMI-DADE COUNTY, FLORIDA
METRO-DADE FLAGLER BUILDING
140 WEST FLAGLER STREET, SUITE 1603
MIAMI, FLORIDA 33130-1563
(305) 375-2901 FAX (305) 375-2908

NOTICE OF ACCEPTANCE (NOA)

Ernesto Rodriquez Hurricane Shutter, Inc.
5277 N.W. 72nd Avenue
Miami, FL 33166

SCOPE:
This NOA is being issued under the applicable rules and regulations governing the use of construction materials. The documentation submitted has been reviewed by Miami-Dade County Product Control Division and accepted by the Board of Rules and Appeals (BORA) to be used in Miami Dade County and other areas where allowed by the Authority Having Jurisdiction (AHJ).

This NOA shall not be valid after the expiration date stated below. The Miami-Dade County Product Control Division (In Miami Dade County) and/or the AHJ (in areas other than Miami Dade County) reserve the right to have this product or material tested for quality assurance purposes. If this product or material fails to perform in the accepted manner, the manufacturer will incur the expense of such testing and the AHJ may immediately revoke, modify, or suspend the use of such product or material within their jurisdiction. BORA reserves the right to revoke this acceptance, if it is determined by Miami-Dade County Product Control Division that this product or material fails to meet the requirements of the applicable building code.

This product is approved as described herein, and has been designed to comply with the High Velocity Hurricane Zone of the Florida Building Code.

DESCRIPTION: " Bertha High Velocity " Aluminum Accordion Shutter System

APPROVAL DOCUMENT: Drawing No. 05-034, titled "Bertha High Velocity Accordion Shutter System", sheets 1 through 14 of 14, prepared by Tilteco, Inc., dated February 24, 2005, signed and sealed by Walter A. Tillit Jr., P.E., on February 25, 2005, bearing the Miami-Dade County Product Control Revision stamp with the Notice of Acceptance number and expiration date by the Miami-Dade County Product Control Division.

MISSILE IMPACT RATING: Large and Small Missile Impact

LABELING: Each unit shall bear a permanent label with the manufacturer's name or logo, city, state and the following statement: "Miami-Dade County Product Control Approved", unless otherwise noted herein.

RENEWAL of this NOA shall be considered after a renewal application has been filed and there has been no change in the applicable building code negatively affecting the performance of this product.

TERMINATION of this NOA will occur after the expiration date or if there has been a revision or change in the materials, use, and/or manufacture of the product or process. Misuse of this NOA as an endorsement of any product, for sales, advertising or any other purposes shall automatically terminate this NOA. Failure to comply with any section of this NOA shall be cause for termination and removal of NOA.

ADVERTISEMENT: The NOA number preceded by the words Miami-Dade County, Florida, and followed by the expiration date may be displayed in advertising literature. If any portion of the NOA is displayed, then it shall be done in its entirety.

INSPECTION: A copy of this entire NOA shall be provided to the user by the manufacturer or its distributors and shall be available for inspection at the job site at the request of the Building Official.

This NOA **revises NOA # 02-0529.03** and consists of this page 1, evidence submitted page(s) as well as approval document mentioned above.

The submitted documentation was reviewed by **Helmy A. Makar, P.E.**

PRODUCT CONTROL ACCEPTED

Helmy A. Makar
04/07/2005

NOA No 05-0308.02
Expiration Date: 06/01/2007
Approval Date: 04/07/2005

Ernesto Rodriquez Hurricane Shutter

NOTICE OF ACCEPTANCE: EVIDENCE SUBMITTED

1. EVIDENCE SUBMITTED UNDER PREVIOUS APPROVAL #99-0416.03

A. DRAWINGS

1. Drawing No. 99-10, titled "ASSA/Economy Accordion Shutter", prepared by Tilteco Inc., dated January 12, 1999, sheets 1 through 9 of 9, signed and sealed by Walter A.. Tillit, Jr., P.E. on March 4, 1999.

B. TESTS

1. See Association's generic approval under 96-0091.

C. CALCULATIONS

1. See Association's generic approval under 96-0091.

D. MATERIAL CERTIFICATIONS

1. See Association's generic approval under 96-0091.

E. STATEMENTS

1. *Release letter issued by the American Shutter Systems Association, Inc., dated February 18, 1999, certifying this product to meet the criteria of product tested and approved, and allowing Ernesto Rodriguez Hurricane Shutter to use the test results approved under Miami-Dade County Approval No. 96-0091, signed by Mr. John J. Cooper.*
2. *Acknowledgment letter by Ernesto Rodriguez Hurricane Shutters, dated January 28, 1999, signed by Mr. Ernesto Rodriguez.*
3. *Letter by Tilteco Inc., dated February 24, 1999, certifying that the drawing (No. 99-10) prepared for Ernesto Rodriguez Hurricane Shutter, signed and sealed by Mr. Walter A. Tillit, Jr., P.E., is engineering wise identical to ASSA's generic drawing (No. 95-62A).*
4. *Acceptance Letter issued to Mr. Ernesto Rodriguez on May 11, 1999 and returned signed by Mr. Ernesto Rodriguez on May 17, 1999, indicating to please issue the proposed Notice of Acceptance as submitted and reviewed.*

2. EVIDENCE SUBMITTED UNDER PREVIOUS APPROVAL #02-0529.03

A. DRAWINGS

1. Manufacturer's die drawings and sections.
2. Drawing No. **02-326**, titled "ASSA/Economy Accordion Shutter", sheets 1 through 9, prepared, signed and sealed by Walter Tillit, P.E., dated 5/21/02.

Helmy A. Makar, P.E.
Product Control Examiner
NOA No 05-0308.02
Expiration Date: 06/01/2007
Approval Date: 04/07/2005

NOTICE OF ACCEPTANCE: EVIDENCE SUBMITTED

B. TESTS
See NOA 99-0416.03

C. CALCULATIONS
See NOA 99-0416.03

D. MATERIAL CERTIFICATIONS
See NOA 99-0416.03

E. STATEMENTS
1. See NOA 99-0416.03
2. Statement letter of no change, dated 5/17/02, signed and sealed by Ernesto Rodriquez.

F. OTHER
NOA **99-0416.03**.

3. NEW EVIDENCE SUBMITTED

A. DRAWINGS
1. *Drawing No. 05-034, titled "Bertha High Velocity Accordion Shutter System", sheets 1 through 14 of 14, prepared by Tilteco, Inc., dated February 24, 2005, signed and sealed by Walter A. Tillit Jr., P.E., on February 25, 2005*

B. TESTS
1. *See Association's generic approval under 04-0052.*

C. CALCULATIONS
1. *See Association's generic approval under 04-0052.*

D. QUALITY ASSURANCE
1. *By Miami-Dade County Building Code Compliance Office.*

E. MATERIAL CERTIFICATIONS
1. *See Association's generic approval under 04-0052.*

F. STATEMENTS
1. *Release letter issued by the American Shutter Systems Association, Inc., dated February 24, 2005, certifying this product to meet the criteria of product tested and approved, and allowing Ernesto Rodriquez Hurricane Shutter, Inc. to use the test results approved under Miami-Dade County Approval No. 04-0052, signed by Legny Santana.*

Helmy A. Makar

Helmy A. Makar, P.E.
Product Control Examiner
NOA No 05-0308.02
Expiration Date: 06/01/2007
Approval Date: 04/07/2005

Ernesto Rodriquez Hurricane Shutter

NOTICE OF ACCEPTANCE: EVIDENCE SUBMITTED

2. *Acknowledgment letter by Ernesto Rodriquez Hurricane Shutter, Inc. dated February 23, 2005, signed and sealed by Mr. Ernesto Rodriquez.*
3. *Letter by Tilteco Inc., dated February 28, 2005, certifying that the drawing (No. 05-034) prepared for Ernesto Rodriquez Hurricane Shutter, Inc., signed and sealed by Mr. Walter A. Tillit Jr., P.E., is engineering wise identical to ASSA's generic drawing (No. 03-033).*

Helmy A. Makar, P.E.
Product Control Examiner
NOA No 05-0308.02
Expiration Date: 06/01/2007
Approval Date: 04/07/2005

GENERAL NOTES:

1. BERTHA HIGH VELOCITY ACCORDION SHUTTER SYSTEM SHOWN ON THIS PRODUCT APPROVAL DOCUMENT (P. A. D.) HAS BEEN VERIFIED FOR COMPLIANCE IN ACCORDANCE WITH THE 2001 EDITION OF THE FLORIDA BUILDING CODE.
THIS ACCORDION SHUTTER SYSTEM MAY BE INSTALLED AT HIGH VELOCITY HURRICANE ZONES.
DESIGN WIND LOADS SHALL BE DETERMINED AS PER SECTION 1619 OF THE ABOVE MENTIONED CODE. IN ORDER TO VERIFY THAT ANCHORS ON THIS P.A.D., AS TESTED, WERE NOT OVERSTRESSED, A 33% INCREASE IN ALLOWABLE STRESS FOR WIND LOADS WAS **NOT** USED IN THEIR ANALYSIS.
BERTHA HIGH VELOCITY ACCORDION SHUTTER SYSTEM'S ADEQUACY FOR IMPACT AND FATIGUE RESISTANCE HAS BEEN VERIFIED IN ACCORDANCE WITH SECTION 1606.1.4 OF THE ABOVE MENTIONED CODE AS PER ATL REPORTS #0214.01-03 AND #0715.01-03 AS PER TAS-201, TAS-202 AND TAS-203.

2. HIGH VELOCITY (H.V.) ACCORDION PINS, USED AT BLADE'S KNUCKLE AND FOR DIRECT MOUNT CONNECTION TO TRACKS SHALL BE # 14 x 2.75" AND #14 x 1.75" RESPECTIVELY, 410-HT MINIMUM SERIES STAINLESS STEEL SCREWS WITH 135.0 ksi YIELD POINT AND 180 ksi TENSILE STRENGTH. PINS SHALL BE COATED WITH BERTHA H.V. DACROSHIELD® COATING SYSTEM AS MANUFACTURED BY GEORGIA METAL COATINGS COMPANY. PINS MUST BEAR THE H.V. MARKING ON THEIR HEAD.

3. ALL ALUMINUM EXTRUSIONS SHALL BE ALUMINUM ASSOCIATION 6063-T6 ALLOY AND TEMPER, WITH Fy = 25.0 ksi MINIMUM (UNLESS OTHERWISE NOTED).

4. ALL SCREWS TO BE STAINLESS STEEL 304 OR 316 AISI SERIES OR CORROSION RESISTANT COATED CARBON STEEL AS PER DIN 50018 WITH 50 ksi YIELD POINT AND 90 ksi TENSILE STRENGTH.

5. BOLTS TO BE ALUMINUM ASSOCIATION 2024-T4 ALLOY AND TEMPER, ASTM A-307 GALVANIZED STEEL, OR AISI 304 SERIES STAINLESS STEEL WITH 35 ksi MINIMUM YIELD STRENGTH.

6. SEE SHEETS 10, 11 AND 12 FOR ANCHORS SPECIFICATIONS.

7. THIS BERTHA HIGH VELOCITY ACCORDION SHUTTER SYSTEM IS PATENT PENDING. COMPONENTS OF THIS APPROVAL ARE COVERED, IN WHOLE OR IN PART BY U.S. PATENT ISSUED TO EASTERN METAL SUPPLY, INC.

8. IT SHALL BE THE RESPONSIBILITY OF THE CONTRACTOR TO VERIFY THE SOUNDNESS OF THE STRUCTURE WHERE SHUTTER IS TO BE ATTACHED TO INSURE PROPER ANCHORAGE.
CONTRACTOR TO SEAL/CAULK ALL SHUTTER COMPONENT EDGES WHICH REMAIN IN CONTINUOUS CONTACT WITH THE BUILDING TO PREVENT WIND/RAIN INTRUSION. CAULK AND SEAL SHUTTER TRACKS ALL AROUND FULL LENGTH.

9. EACH UNIT MUST BEAR A PERMANENT LABEL IN A VISIBLE PLACE WITH WARNING NOTE INSTRUCTING THE TENANT OR HOME OWNER THAT THE H.V. LOCK (W) OR ALTERNATE LOCK (W1) MUST BE PROPERLY LOCKED DURING PERIODS OF HURRICANE WARNING. FOR EGRESS CONDITIONS, AN INSIDE HV LOCK (W) (WHERE KEY MUST REMAIN IN THE LOCK), AN INSIDE ALTERNATE LOCK (W1) , OR AN EGRESS H.V. LOCK (W) SHALL BE USED.

10. SHUTTER'S MANUFACTURER LABEL SHALL BE PLACED ON THE EXPOSED SURFACE OF THE CENTERMATE "(L)" OR "(M)".
ONE LABEL SHALL BE PLACED FOR EVERY OPENING. LABEL SHALL READ AS FOLLOWS:
ERNESTO RODRIGUEZ HURRICANE SHUTTER, INC.
MIAMI, FL.
MIAMI-DADE COUNTY PRODUCT CONTROL APPROVED.

11. BERTHA HIGH VELOCITY ACCORDION SHUTTER SYSTEM'S INSTALLATION SHALL COMPLY WITH SPECS INDICATED IN THIS DRAWING PLUS ANY BUILDING AND ZONING REGULATIONS PROVIDED BY THE JURISDICTION WHERE PERMIT IS APPLIED TO.

12. (a) THIS P.A.D. PREPARED BY THIS ENGINEER IS GENERIC AND DOES NOT PROVIDE INFORMATION FOR A SITE SPECIFIC PROJECT; i.e. WHERE THE SITE CONDITIONS DEVIATE FROM THE P.A.D.

(b) CONTRACTOR TO BE RESPONSIBLE FOR THE SELECTION, PURCHASE AND INSTALLATION INCLUDING LIFE SAFETY OF THIS PRODUCT, BASED ON THIS P.A.D., PROVIDED HE/SHE DOES NOT DEVIATE FROM THE CONDITIONS DETAILED ON THIS DOCUMENT. CONSTRUCTION SAFETY AT SITE IS THE CONTRACTOR'S RESPONSIBILITY.

(c) THIS P.A.D. WILL BE CONSIDERED INVALID IF ALTERED BY ANY MEANS.

(d) SITE SPECIFIC PROJECTS SHALL BE PREPARED BY A FLORIDA REGISTERED ENGINEER OR ARCHITECT WHICH WILL BECOME THE ENGINEER OF RECORD (P.O.R.) FOR THE PROJECT AND WHO WILL BE RESPONSIBLE FOR THE PROPER USE OF THE P.A.D. ENGINEER OF RECORD, ACTING AS A DELEGATED ENGINEER TO THE P.A.D. ENGINEER SHALL SUBMIT TO THIS LATTER THE SITE SPECIFIC DRAWINGS FOR REVIEW.

(e) THIS P.A.D. SHALL BEAR THE DATE AND ORIGINAL SEAL AND SIGNATURE OF THE PROFESSIONAL ENGINEER OF RECORD THAT PREPARED IT.

F.B.C.(**H.V.H.Z.**) MIAMI-DADE COUNTY

PRODUCT REVISED
as complying with the Florida
Building Code
Acceptance No 05-0308.02
Expiration Date 06/01/2007
By Helena A. Molina
Miami Dade Product Control
Division

MIAMI-DADE COUNTY

FEB 25 2005
P.E. SEAL/SIGNATURE/DATE

TILTECO INC.
TILLIT TESTING & ENGINEERING COMPANY
6355 NW. 36th. St., Ste. 305, VIRGINIA GARDENS, FLORIDA 33166
Phone : (305)871-1530 . Fax : (305)871-1531
e-mail: tilteco@aol.com
EB-0006719
WALTER A. TILLIT Jr. P. E.
FLORIDA Lic. # 44167

ERNESTO RODRIGUEZ HURRICANE SHUTTER, INC.
(ASSA # 112)
5288 NW 72nd AVENUE
MIAMI, FL 33166
PHONE: (305)649-9993

© 2003 EASTERN METAL SUPPLY, INC.

BERTHA™ **HIGH VELOCITY**
ACCORDION SHUTTER SYSTEM

REV. No	DESCRIPTION	DATE
1	GENERAL	
2		
3		
4		
5		

SCALE:
DATE: 2/24/05
DRAWING No **05-034**
SHEET **1 OF 14**

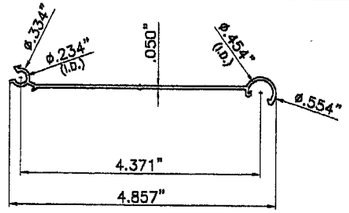

(A) HV BLADE # 1

COVERED UNDER US PATENT # 5458179

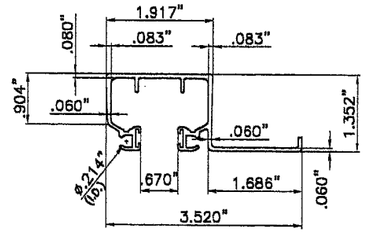

(B) HV CEILING HEADER # 1

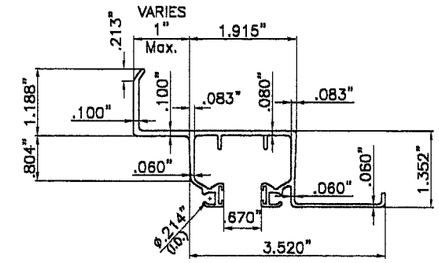

(C) HV 1" (Max.) B/O HEADER/SILL # 1

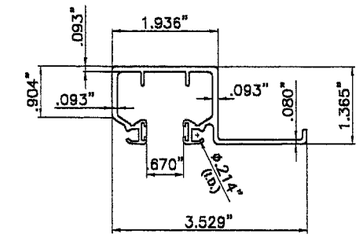

(E) HD CEILING HEADER/SILL # 2

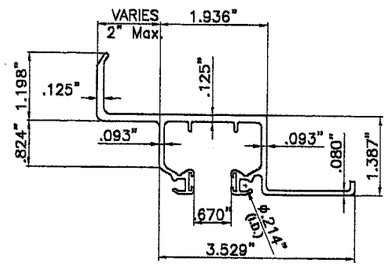

(F) HD 2" (Max.) B/O HEADER/SILL # 2

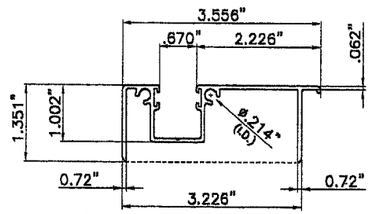

(I) HV ADJ. TRACK

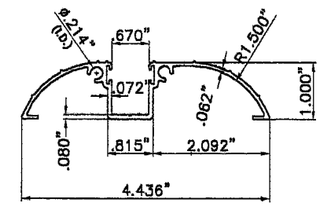

(J) HV WALK-OVER TRACK

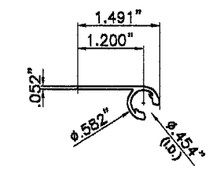

(K) HV 90°/180° STARTER

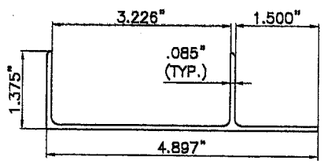

(H) HV ADJ. ADAPTER W/LIP

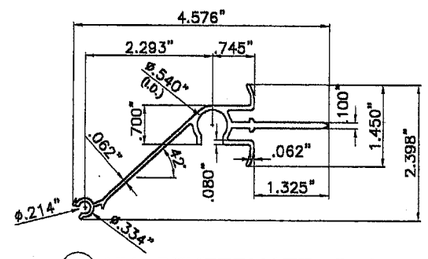

(L) HV CENTERMATE # 1

(SELF MATING)

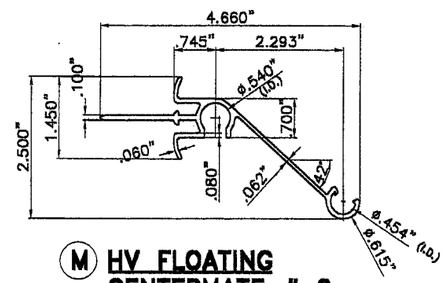

(M) HV FLOATING CENTERMATE # 2

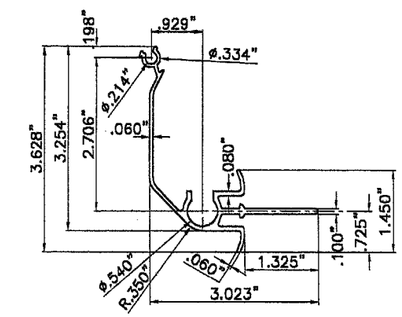

(X) HV CORNER CENTERMATE # 3

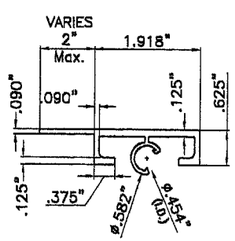

(N) H.V. 2" (Max.) DIRECT MOUNT

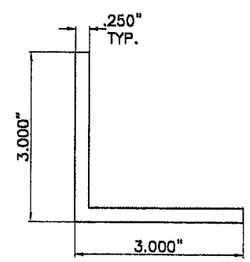

(O) 3" FLOOR ANGLE

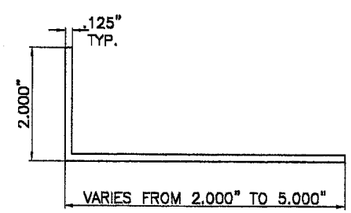

(Q) B.O. WALL ANGLE

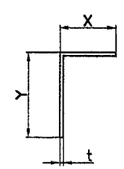

X	Y	t
1"	1"	0.062"
1"	2"	0.062"
2"	2"	0.062"
2"	3"	0.062"
2"	4"	0.062"
2"	5"	0.062"

(R) SIDE ANGLE

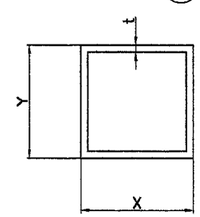

X	Y	t
2"	2"	0.125"
3"	3"	0.090"

(S) CORNER POST

F.B.C.(**H.V.H.Z.**) MIAMI-DADE COUNTY

PRODUCT REVISED
as complying with the Florida
Buiding Code
Acceptance No 05-0308.02
Expiration Date 06/01/2007
By Helena A. Molina
Miami Dade Product Control
Division

MIAMI-DADE COUNTY

FEB 25 2005

P.E. SEAL/SIGNATURE/DATE

TILTECO INC.

TILLIT TESTING & ENGINEERING COMPANY
6355 N.W. 36th. St., Ste. 305, VIRGINIA GARDENS, FLORIDA 33166
Phone : (305)871-1530 . Fax : (305)871-1531
e-mail: tilteco@aol.com
EB-0006719
WALTER A. TILLIT Jr. P. E.
FLORIDA Lic. # 44167

ERNESTO RODRIGUEZ HURRICANE SHUTTER, INC.

(ASSA # 112)

5288 NW 72nd AVENUE
MIAMI, FL 33166
PHONE: (305)649-9993

© 2003 EASTERN METAL SUPPLY, INC.

BERTHA™ HIGH VELOCITY

ACCORDION SHUTTER SYSTEM

REV. No	DESCRIPTION	DATE
1	GENERAL	
2		
3		
4		
5		

SCALE: 3/8"=1"
DATE: 2/24/05
DRAWING No **05-034**
SHEET **2 OF 14**

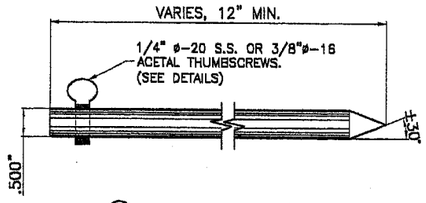

Ⓤ LOCKING ROD

(SEE NOTES ON SHEET 4)

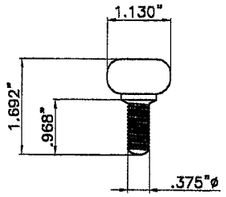

3/8"ø-16 ACETAL THUMBSCREWS

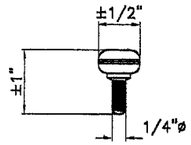

1/4" ø-20 S.S. THUMBSCREWS

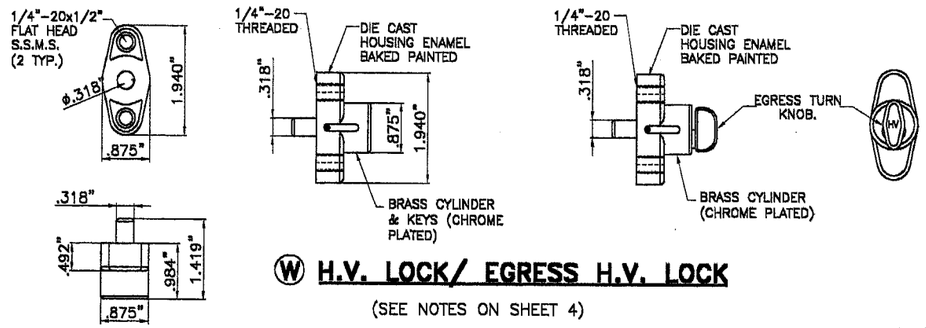

Ⓦ H.V. LOCK/ EGRESS H.V. LOCK

(SEE NOTES ON SHEET 4)

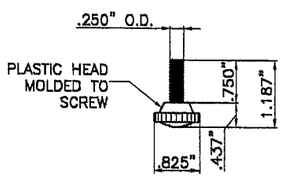

1/4"ø-20 x 3/4" S.S. THUMBSCREW

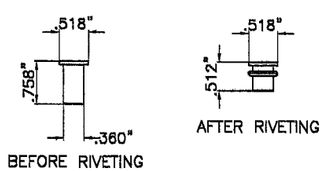

1/4"ø-20 RIVNUT*

Ⓦ1 ALTERNATE LOCK (TO HV LOCK Ⓦ)

(SEE NOTES ON SHEET 4)

*: SERIES 9444 ALUMINUM (2024-T3 ALLOY) LARGE FLANGE THIN SHEET NUTSERT, PART # 0820, AS MANUFACTURED BY AVDEL CHERRY TEXTORN, PARSIPPENY, NEW JERSEY 07054 OR EQUAL.

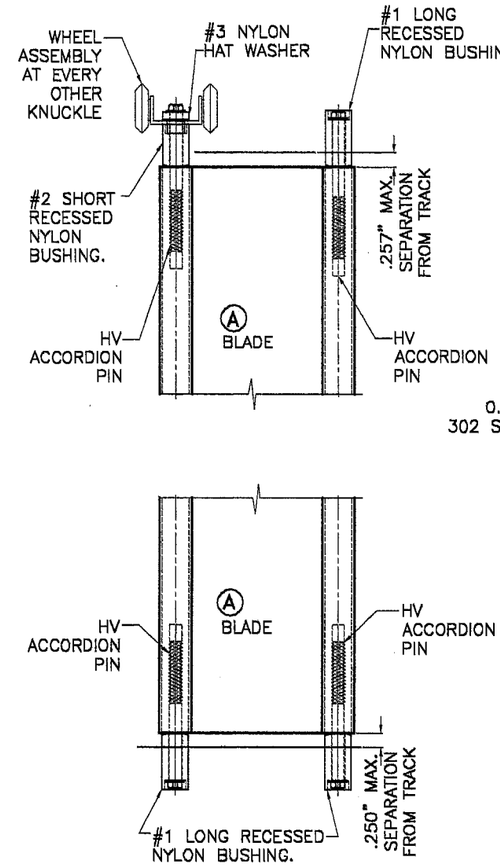

TYPICAL SHUTTER ASSEMBLY

SCALE: 3/8" = 1"

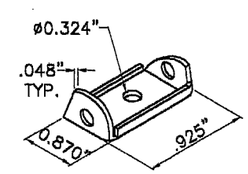

WHEEL CARRIAGE DETAIL

N.T.S.

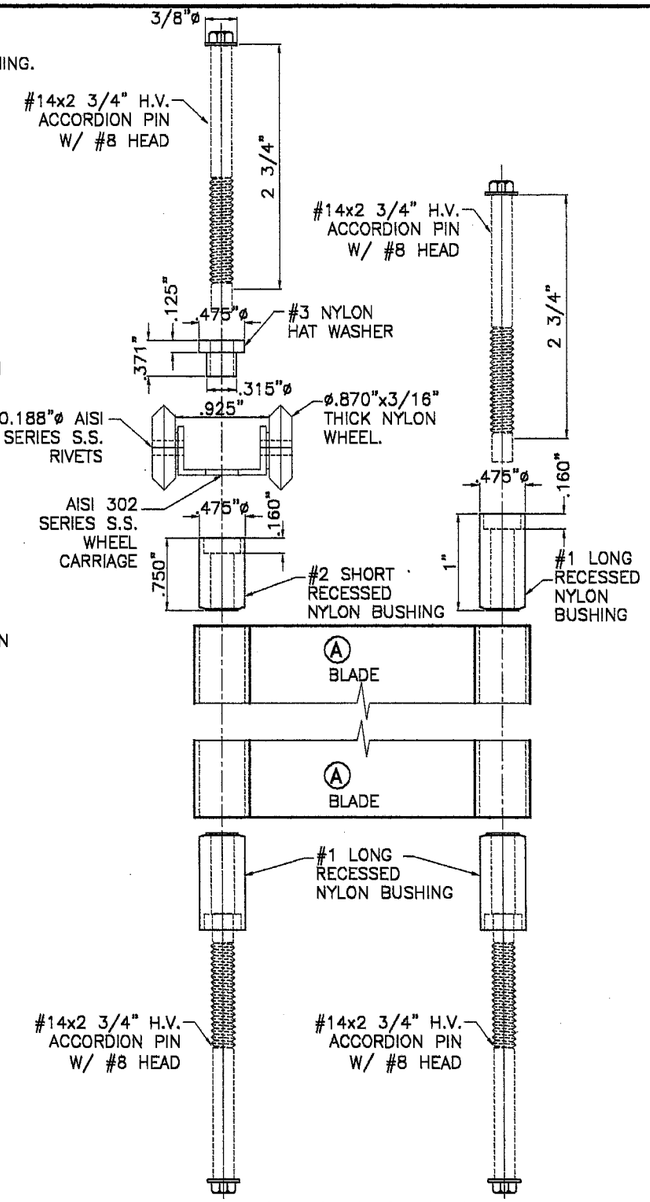

ASSEMBLY LAYOUT

N.T.S.

F.B.C.(**H.V.H.Z.**) MIAMI-DADE COUNTY

PRODUCT REVISED
as complying with the Florida Building Code
Acceptance No. 05-0308.02
Expiration Date 06/01/2007
By Helmy A. Helal
Miami Dade Product Control Division

MIAMI-DADE COUNTY

FEB 25 2005

P.E. SEAL/SIGNATURE/DATE

TILTECO INC.
TILLIT TESTING & ENGINEERING COMPANY
6355 N.W. 36th. St., Ste. 305, VIRGINIA GARDENS, FLORIDA 33166
Phone : (305)871-1530 . Fax : (305)871-1531
e-mail: tilteco@aol.com
EB-0006719
WALTER A. TILLIT Jr. P. E.
FLORIDA Lic. # 44167

ERNESTO RODRIGUEZ HURRICANE SHUTTER, INC.

(ASSA # 112)

5288 NW 72nd AVENUE
MIAMI, FL 33166
PHONE: (305)649-9993

© 2003 EASTERN METAL SUPPLY, INC.

BERTHA™ HIGH VELOCITY
ACCORDION SHUTTER SYSTEM

REV. No	DESCRIPTION	DATE
1	GENERAL	
2		
3		
4		
5		

SCALE: 3/8"=1"
DATE: 2/24/05
DRAWING No **05-034**
SHEET **3 OF 14**

* NOTES ON LOCKING RODS Ⓤ , HV LOCK Ⓦ AND ALTERNATE Ⓦ1 LOCK:

1. **MANDATORY CONDITION #1:** ONE HV LOCK Ⓦ SHALL BE USED FOR ANY SPAN AND INSTALLATIONS AT ANY ELEVATION. HV LOCK Ⓦ MAY BE USED AS AN INSIDE OR OUTSIDE LOCK, ATTACHED TO Ⓛ OR Ⓜ CENTERMATES W/(2) 1/4"ø–20 x 1/2" LONG FLAT HEAD S.S. M.S. LOCATION OF LOCK SHALL BE AS INDICATED ON TYPICAL SHUTTER ELEVATION. MAXIMUM SHUTTER SPAN SHALL BE DETERMINED AS PER SCHEDULES #1 & #2 ON SHEET 9.

2. **LIMITED MANDATORY CONDITION #2 ALTERNATE TO MANDATORY CONDITION #1 (VALID ONLY FOR FLOOR/CEILING INSTALLATIONS):** TWO HV LOCKS Ⓦ OR ONE HV LOCK Ⓦ W/ TWO LOCKING RODS Ⓤ AT TOP & BOTTOM SHALL BE USED FOR ANY SPAN AND INSTALLATION AT ANY ELEVATION. HV LOCK Ⓦ SHALL BE ATTACHED TO Ⓛ OR Ⓜ CENTERMATES W/ SAME SPECIFICATIONS AS PER MANDATORY CONDITION #1. LOCATION OF LOCK/LOCKS AS APPLICABLE SHALL BE AS INDICATED ON TYPICAL SHUTTER ELEVATION. MAXIMUM SHUTTER SPAN SHALL BE DETERMINED AS PER SCHEDULE #3 ON SHEET 9.

3. **OPTIONAL CONDITION #1 (VALID ONLY WHEN MANDATORY CONDITION #1 IS USED):** IF DESIRED, FOR BETTER PERFORMANCE OR FOR SECURITY PURPOSES, UP TO TWO HV LOCKS Ⓦ MAY BE USED AS AN INSIDE OR OUTSIDE LOCK. CONNECTION OF LOCKS TO CENTERMATES Ⓛ OR Ⓜ SHALL BE AS INDICATED ON NOTE (1) ABOVE. LOCATION OF LOCKS SHALL BE AS INDICATED ON TYPICAL SHUTTER ELEVATION.

4. **OPTIONAL CONDITION #2 (VALID ONLY WHEN MANDATORY CONDITION #1 OR LIMITED MANDATORY CONDITION #2 IS USED W/TWO H.V. LOCKS):** LOCKING RODS Ⓤ ARE NOT REQUIRED AT HURRICANE POSITION, BUT MAY BE USED IF DESIRED TO ENHANCE SHUTTER PERFORMANCE. LOCKING RODS Ⓤ OR AN ALTERNATIVE DEVICE MAY ALSO BE USED AT STACKING POSITION (NON HURRICANE POSITION).

5. **MANDATORY CONDITION #2:** ONE HV LOCK Ⓦ SHALL BE USED AT CORNER CENTERMATES FOR ANY SPAN AND INSTALLATIONS AT ANY ELEVATION. HV LOCK Ⓦ SHALL BE USED AS AN OUTSIDE OR INSIDE LOCK, ATTACHED TO Ⓧ CORNER CENTERMATE W/(2) 1/4"ø–20 x 1/2" LONG FLAT HEAD S.S. M.S. TWO LOCKING RODS Ⓤ AT TOP & BOTTOM SHALL BE USED. LOCATION OF LOCK SHALL BE AS INDICATED ON TYPICAL SHUTTER ELEVATION. MAXIMUM SHUTTER SPAN SHALL BE DETERMINED AS PER SCHEDULES SHOWN ON SHEET 9.

6. **ALTERNATE TO MANDATORY CONDITION #1 (VALID ONLY FOR SYMMETRICAL CENTERMATES):** ONE ALTERNATE LOCK Ⓦ1 MAY BE USED IN LIEU OF HV LOCK Ⓦ FOR ANY SPAN AND INSTALLATIONS AT ANY ELEVATION. ALTERNATE LOCK Ⓦ1 MAY BE USED AS AN INSIDE OR OUTSIDE LOCK. ATTACHMENT OF 1/4"ø–20x3/4" S.S. THUMBSCREW TO Ⓛ OR Ⓜ CENTERMATES SHALL BE MADE W/ 1/4"ø–20x3/4" ALUM. RIVNUT AS SHOWN ON ALTERNATE SECTION 12, SHEET 7.

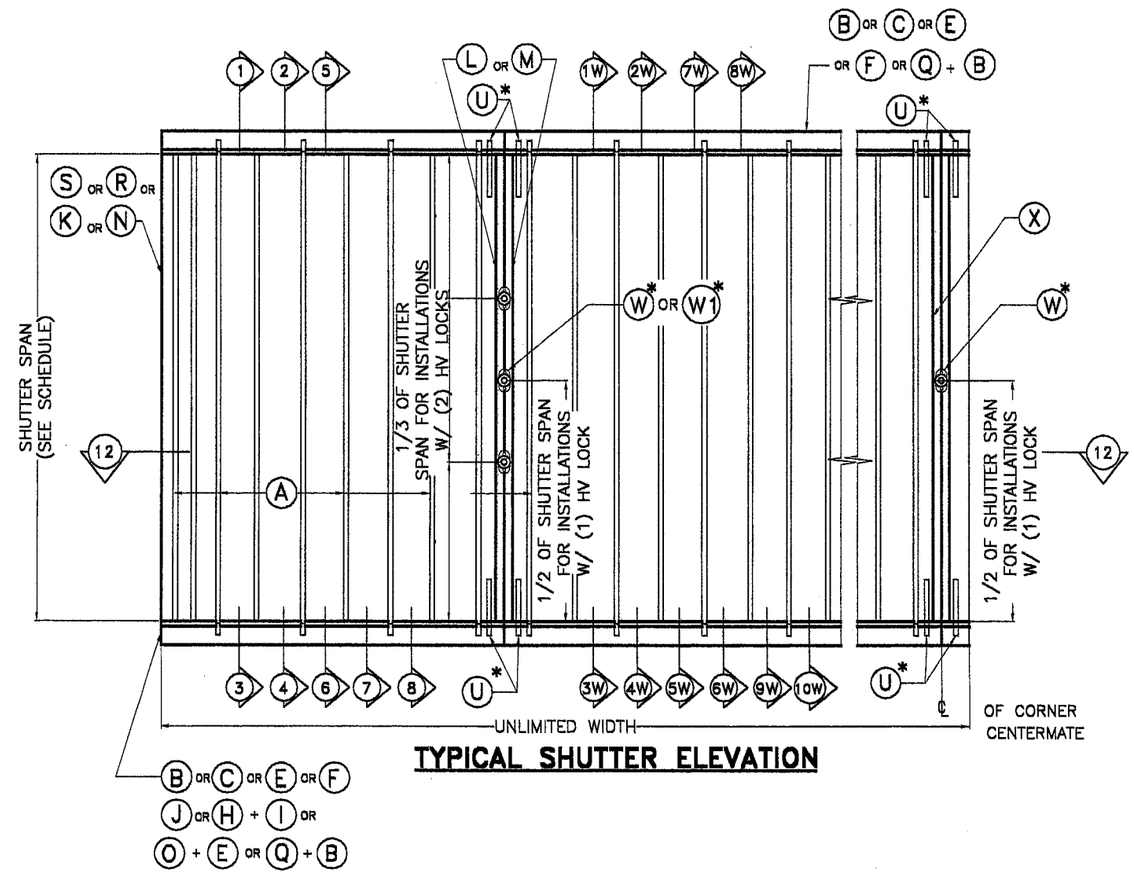

TYPICAL SHUTTER ELEVATION

F.B.C.(**H.V.H.Z.**) MIAMI–DADE COUNTY

PRODUCT REVISED
as complying with the Florida Building Code
Acceptance No 05-0308.02
Expiration Date 06/01/2007
By Helena A. Molina
Miami Dade Product Control Division

MIAMI–DADE COUNTY

FEB 25 2005

P.E. SEAL/SIGNATURE/DATE

TILTECO INC.
TILLIT TESTING & ENGINEERING COMPANY
6355 N.W. 36th. St., Ste. 305, VIRGINIA GARDENS, FLORIDA 33166
Phone : (305)871–1530 . Fax : (305)871–1531
e–mail: tilteco@aol.com
EB–0006719
WALTER A. TILLIT Jr. P. E.
FLORIDA Lic. # 44167

ERNESTO RODRIGUEZ HURRICANE SHUTTER, INC.

(ASSA # 112)

5288 NW 72nd AVENUE
MIAMI, FL 33166
PHONE: (305)649–9993

© 2003 EASTERN METAL SUPPLY, INC.

BERTHA™ **HIGH VELOCITY**
ACCORDION SHUTTER SYSTEM

REV. No	DESCRIPTION	DATE	SCALE:AS SHOWN
1	GENERAL		DATE: 2/24/05
2			DRAWING No
3			**05–034**
4			SHEET
5			**4 OF 14**

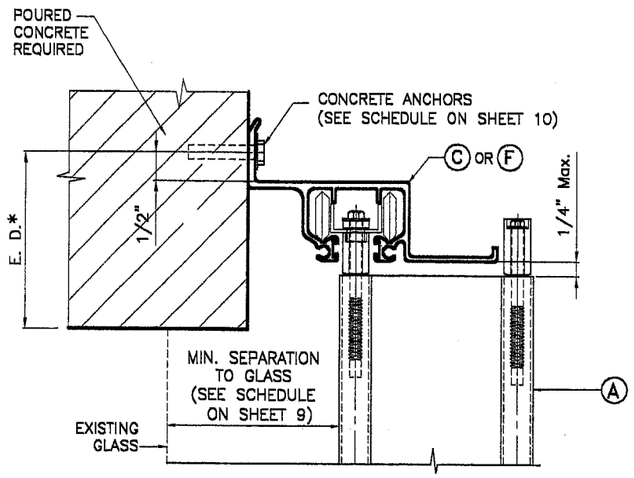

① **WALL MOUNTING INSTALLATION**

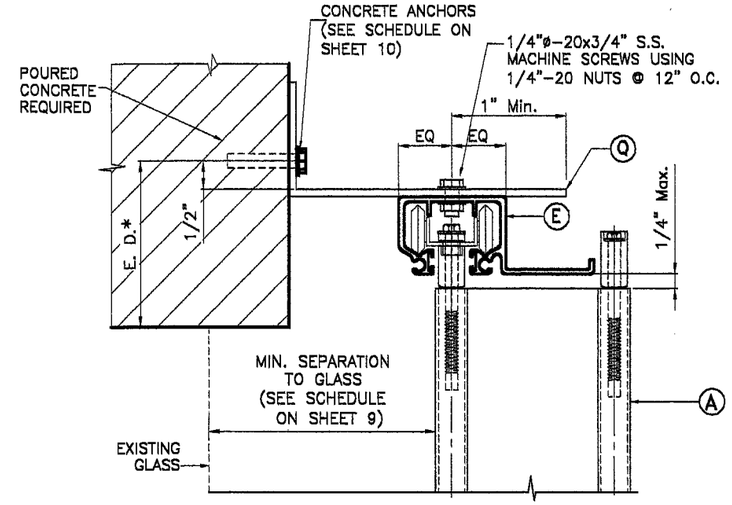

② **WALL MOUNTING INSTALLATION**

NOTE FOR COMBINATION OF SECTIONS:

1- SEE SHEET 3 FOR TYPICAL SHUTTER ASSEMBLY
2- MOUNTING SECTIONS CAN BE COMBINED IN ANY WAY TO SUIT ANY INSTALLATION.

* E. D. = EDGE DISTANCE (SEE NOTES & SCHEDULE ON SHEET 11)

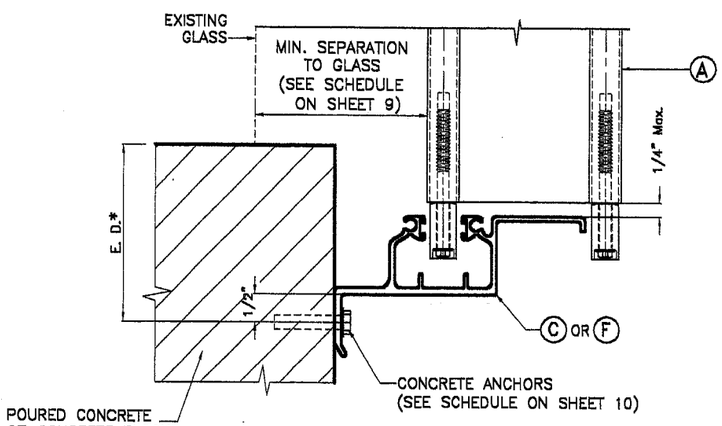

③ **WALL MOUNTING INSTALLATION**

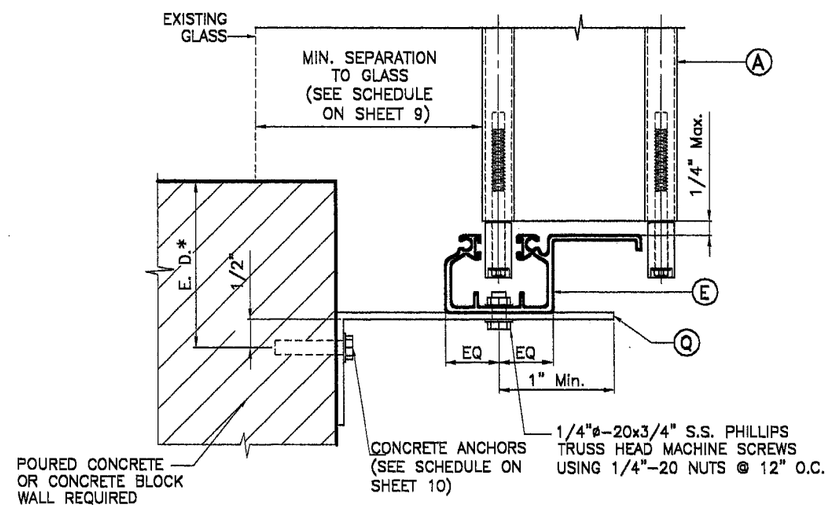

④ **WALL MOUNTING INSTALLATION**

INSTALLATION DETAILS

F.B.C.(**H.V.H.Z.**) MIAMI-DADE COUNTY

PRODUCT REVISED
as complying with the Florida Buiding Code
Acceptance No 05-0308.02
Expiration Date 06/01/2007
By Helmy A. Mekar
Miami Dade Product Control Division

MIAMI-DADE COUNTY

FEB 25 2005

P.E. SEAL/SIGNATURE/DATE

TILTECO INC.
TILLIT TESTING & ENGINEERING COMPANY
6355 N.W. 36th. St., Ste. 305, VIRGINIA GARDENS, FLORIDA 33166
Phone : (305)871-1530 . Fax : (305)871-1531
e-mail: tilteco@aol.com
EB-0006719
WALTER A. TILLIT Jr. P. E.
FLORIDA Lic. # 44167

ERNESTO RODRIGUEZ HURRICANE SHUTTER, INC.

(ASSA # 112)

5288 NW 72nd AVENUE
MIAMI, FL 33166
PHONE: (305)649-9993

© 2003 EASTERN METAL SUPPLY, INC.

BERTHA™ HIGH VELOCITY
ACCORDION SHUTTER SYSTEM

REV. No	DESCRIPTION	DATE
1	GENERAL	
2		
3		
4		
5		

SCALE: 3/8"=1"
DATE: 2/24/05
DRAWING No **05-034**
SHEET **5 OF 14**

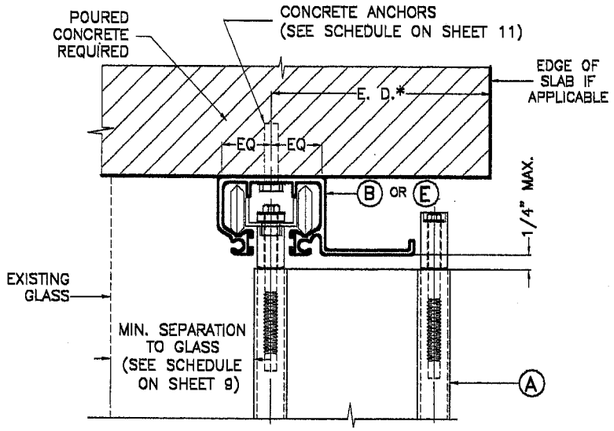

⑤ CEILING MOUNTING INSTALLATION

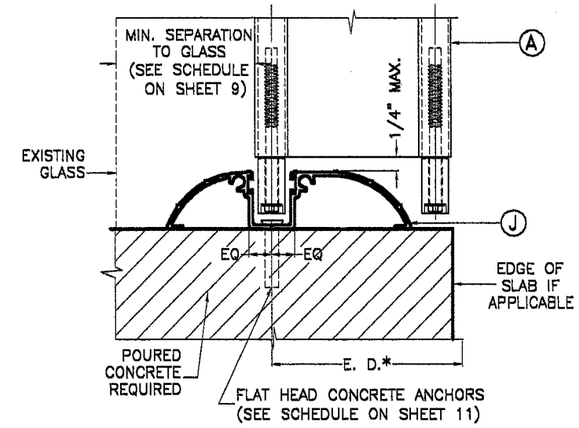

⑥ WALK-OVER MOUNTING INSTALLATION

NOTE FOR COMBINATION OF SECTIONS:

1- SEE SHEET 3 FOR TYPICAL SHUTTER ASSEMBLY
2- MOUNTING SECTIONS CAN BE COMBINED IN ANY WAY TO SUIT ANY INSTALLATION.

* E. D. = EDGE DISTANCE (SEE NOTES & SCHEDULE ON SHEET 11)

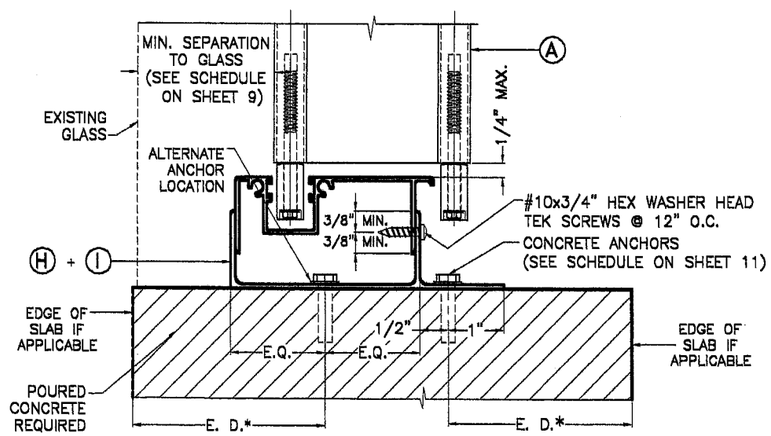

⑦ FLOOR MOUNTING INSTALLATION †

† NOTE:

THIS INSTALLATION SHALL BE REMOVABLE WHEN PERFORMED ADJACENT TO AN OPERABLE EXIT OR ENTRANCE

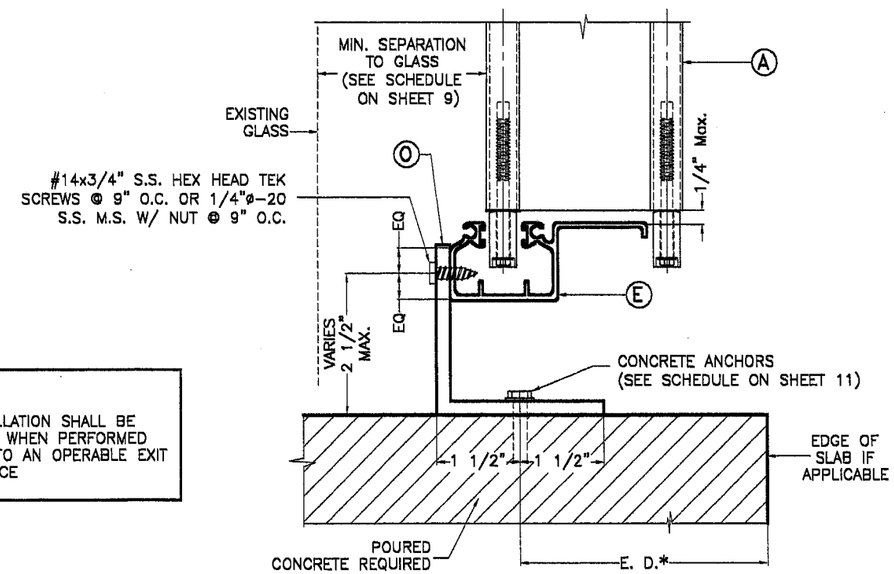

⑧ FLOOR MOUNTING INSTALLATION †

INSTALLATION DETAILS

F.B.C.(**H.V.H.Z.**) MIAMI-DADE COUNTY

PRODUCT REVISED
as complying with the Florida Building Code
Acceptance No 05-0308.02
Expiration Date 06/01/2007
By Helena A. Molina
Miami Dade Product Control Division

MIAMI-DADE COUNTY

FEB 25 2005
P.E. SEAL/SIGNATURE/DATE

TILTECO INC.
TILLIT TESTING & ENGINEERING COMPANY
6355 N.W. 36th. St., Ste. 305, VIRGINIA GARDENS, FLORIDA 33166
Phone : (305)871-1530 . Fax : (305)871-1531
e-mail: tilteco@aol.com
EB-0006719
WALTER A. TILLIT Jr. P. E.
FLORIDA Lic. # 44167

ERNESTO RODRIGUEZ HURRICANE SHUTTER, INC.
(ASSA # 112)
5288 NW 72nd AVENUE
MIAMI, FL 33166
PHONE: (305)649-9993

© 2003 EASTERN METAL SUPPLY, INC.

BERTHA™ **HIGH VELOCITY**
ACCORDION SHUTTER SYSTEM

REV. No	DESCRIPTION	DATE
1	GENERAL	
2		
3		
4		
5		

SCALE: 3/8" = 1"
DATE: 2/24/05
DRAWING No **05-034**
SHEET **6 OF 14**

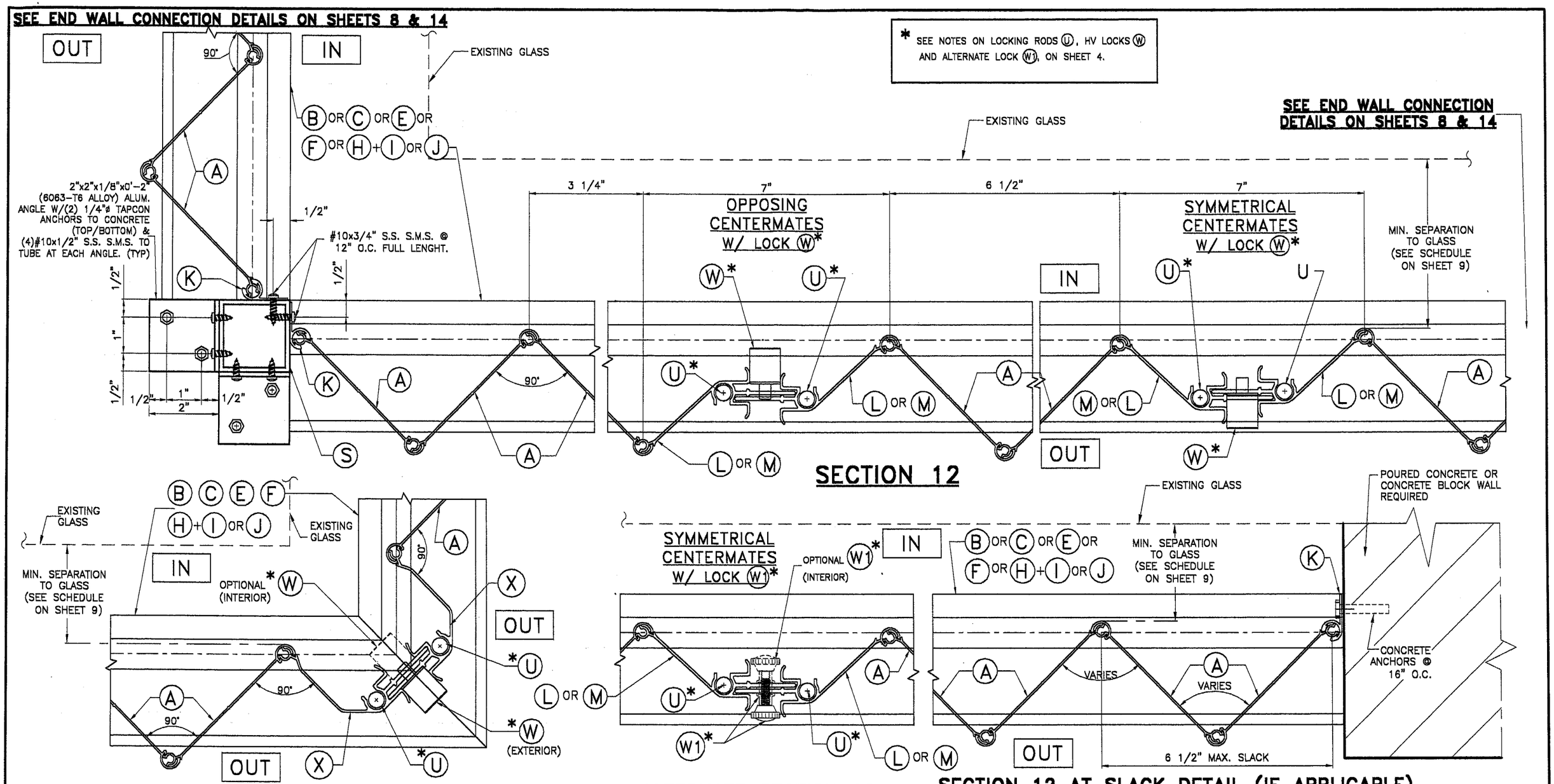

F.B.C.(**H.V.H.Z.**) MIAMI-DADE COUNTY

PRODUCT REVISED
as complying with the Florida Building Code
Acceptance No 05-0308.02
Expiration Date 06/01/2007
By [signature]
Miami Dade Product Control Division

MIAMI-DADE COUNTY

FEB 25 2005

P.E. SEAL/SIGNATURE/DATE

TILTECO INC.
TILLIT TESTING & ENGINEERING COMPANY
6355 N.W. 36th. St., Ste. 305, VIRGINIA GARDENS, FLORIDA 33166
Phone : (305)871-1530 . Fax : (305)871-1531
e-mail: tilteco@aol.com
EB-0006719
WALTER A. TILLIT Jr. P. E.
FLORIDA Lic. # 44167

ERNESTO RODRIGUEZ HURRICANE SHUTTER, INC.
(ASSA # 112)
5288 NW 72nd AVENUE
MIAMI, FL 33166
PHONE: (305)649-9993

© 2003 EASTERN METAL SUPPLY, INC.

BERTHA™ HIGH VELOCITY
ACCORDION SHUTTER SYSTEM

REV. No	DESCRIPTION	DATE
1	GENERAL	
2		
3		
4		
5		

SCALE: 3/8"=1"
DATE: 2/24/05
DRAWING No **05-034**
SHEET **7 OF 14**

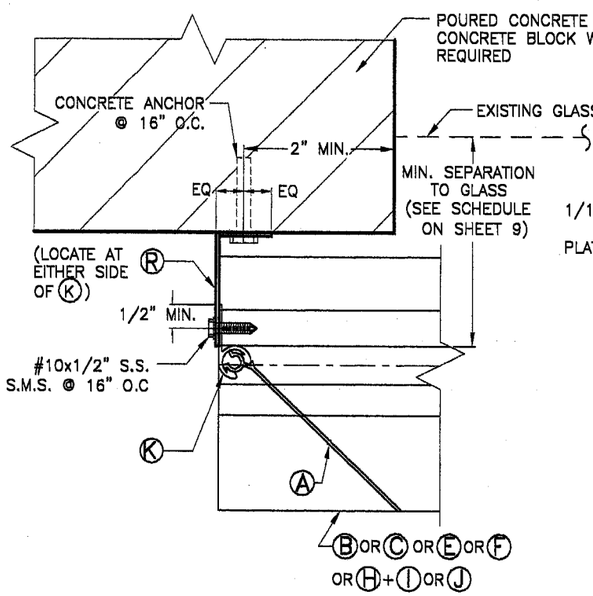

END CONNECTION DETAIL (1)

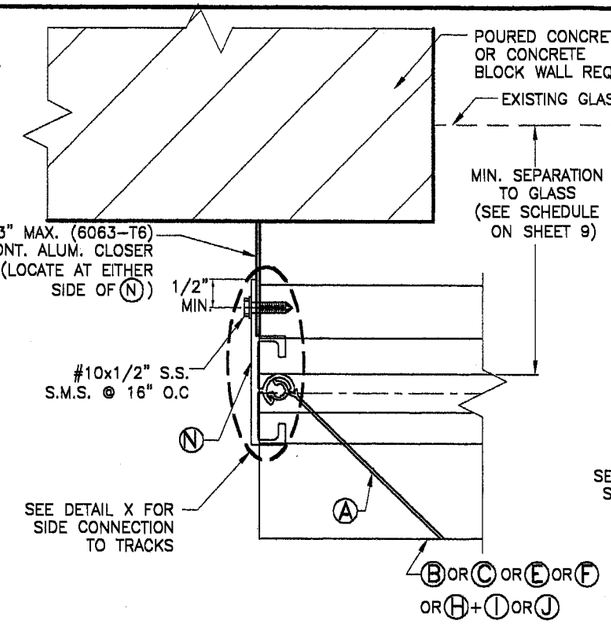

END CONNECTION DETAIL (2)

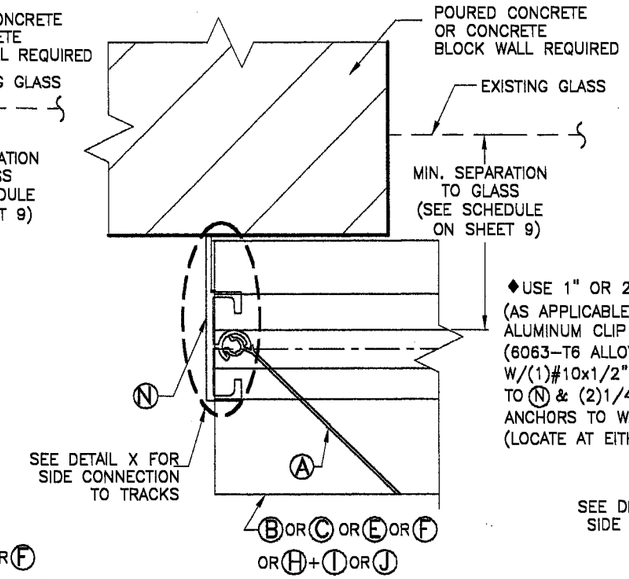

END CONNECTION DETAIL (3)

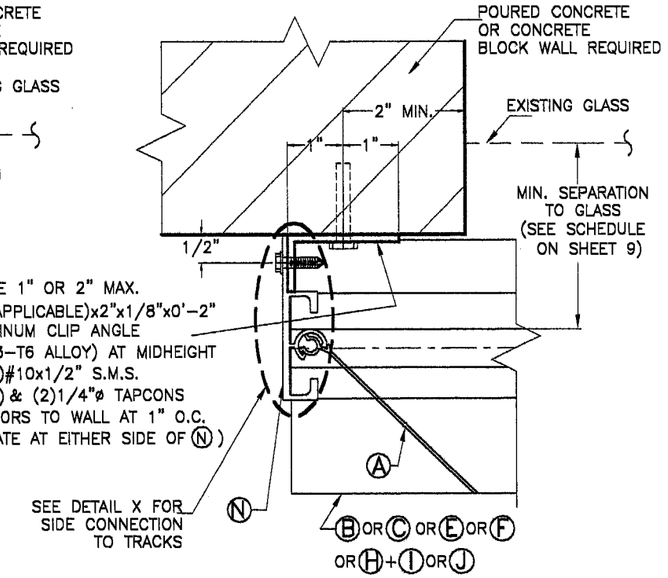

END CONNECTION DETAIL (4)

◆ REQUIRED ONLY FOR SPANS GREATER THAN 12'-0"

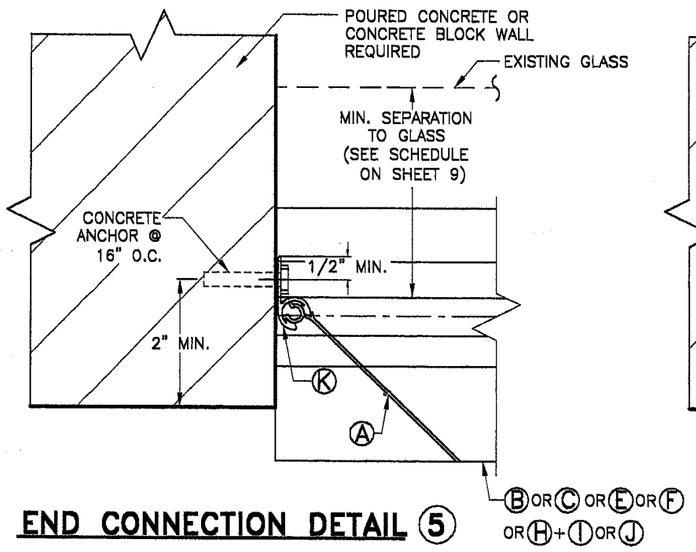

END CONNECTION DETAIL (5)

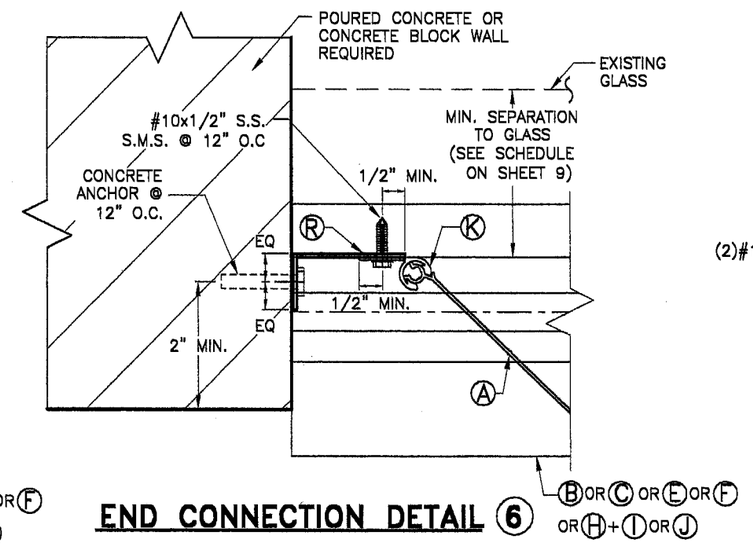

END CONNECTION DETAIL (6)

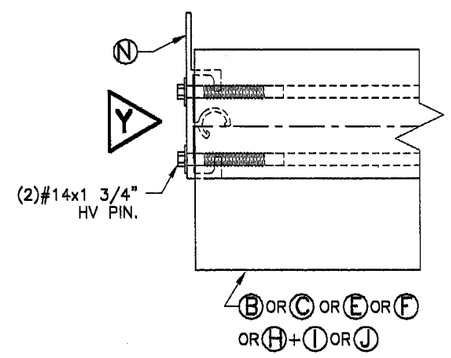

PLAN

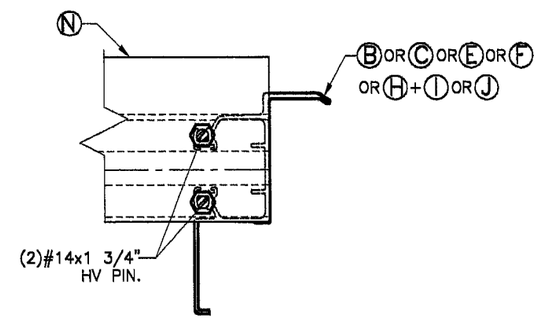

VIEW Y

DETAIL X

F.B.C.(**H.V.H.Z.**) MIAMI-DADE COUNTY

PRODUCT REVISED
as complying with the Florida Buiding Code
Acceptance No 05-0308.02
Expiration Date 06/01/2007
By Helena A. Melan
Miami Dade Product Control Division

MIAMI-DADE COUNTY

FEB 25 2005

P.E. SEAL/SIGNATURE/DATE

TILTECO INC.
TILLIT TESTING & ENGINEERING COMPANY
6355 N.W. 36th. St., Ste. 305, VIRGINIA GARDENS, FLORIDA 33166
Phone : (305)871-1530 . Fax : (305)871-1531
e-mail: tilteco@aol.com
EB-0006719
WALTER A. TILLIT Jr. P. E.
FLORIDA Lic. # 44167

ERNESTO RODRIGUEZ HURRICANE SHUTTER, INC.

(ASSA # 112)

5288 NW 72nd AVENUE
MIAMI, FL 33166
PHONE: (305)649-9993

© 2003 EASTERN METAL SUPPLY, INC.

BERTHA™ HIGH VELOCITY
ACCORDION SHUTTER SYSTEM

REV. No	DESCRIPTION	DATE
1	GENERAL	
2		
3		
4		
5		

SCALE: 3/8" = 1"
DATE: 2/24/05
DRAWING No **05-034**
SHEET **8 OF 14**

SCHEDULE #1

MAXIMUM SHUTTER SPAN "L+" OR "L−" (ft.)*
INSTALLATIONS W/ **SYMMETRICAL CENTERMATES,**
ONE HV LOCK & NO LOCKING RODS ♦
(SEE NOTE †)

MAXIMUM DESIGN LOAD (p.s.f.) (+ OR −)	CONCRETE & WOOD INSTALLATIONS ▲			
	WALL MOUNTING		FLOOR/CEILING MOUNTING	
	L + (ft)	L − (ft)	L + (ft)	L − (ft)
30	13'−2"	16'−0"	13'−2"	16'−0"
35	12'−8"	14'−10"	12'−8"	14'−10"
40	12'−3"	13'−10"	12'−3"	13'−10"
45	11'−11"	13'−1"	11'−11"	13'−1"
50	11'−7"	12'−5"	11'−7"	12'−5"
55	11'−4"	11'−10"	11'−4"	11'−10"
60	11'−1"	11'−4"	11'−0"	11'−4"
65	10'−10"	10'−10"	10'−7"	10'−10"
70	10'−6"	10'−6"	10'−2"	10'−6"
75	10'−1"	10'−1"	9'−10"	10'−1"
80	9'−10"	9'−9"	9'−7"	9'−10"
85	9'−6"	9'−6"	9'−3"	9'−6"
90	9'−3"	9'−3"	9'−0"	9'−3"
95	9'−0"	8'−9"	8'−9"	9'−0"
100	8'−9"	8'−4"	8'−6"	8'−9"
105	8'−7"	7'−11"	8'−4"	8'−4"
110	8'−4"	7'−7"	8'−2"	7'−11"
115	8'−2"	7'−3"	8'−0"	7'−7"
120	8'−0"	6'−11"	7'−10"	7'−4"
125	7'−10"	6'−8"	7'−8"	7'−0"
130	7'−8"	6'−5"	7'−6"	6'−9"
135	7'−7"	6'−2"	7'−4"	6'−6"
140	7'−5"	5'−11"	7'−3"	6'−3"
145	7'−3"	5'−9"	7'−1"	6'−0"
150	7'−2"	5'−7"	7'−0"	5'−10"
155	7'−0"	5'−5"	6'−10"	5'−8"
160	6'−11"	5'−2"	6'−9"	5'−6"
165	6'−10"	5'−1"	6'−8"	5'−4"
170	6'−9"	4'−11"	6'−7"	5'−2"
175	6'−7"	4'−9"	6'−5"	5'−0"
180	6'−6"	4'−8"	6'−4"	4'−10"
185	6'−5"	4'−6"	6'−3"	4'−9"
190	6'−4"	4'−5"	6'−2"	4'−7"
195	6'−3"	4'−3"	6'−1"	4'−6"
200	6'−2"	4'−2"	6'−0"	4'−5"
205	6'−0"	4'−1"	6'−0"	4'−3"

SCHEDULE #2

MAXIMUM SHUTTER SPAN
"L+" OR "L−" (ft.)*
INSTALLATIONS W/
OPPOSING CENTERMATES,
ONE HV LOCK & NO
LOCKING RODS ♦
(SEE NOTE †)

MAXIMUM DESIGN LOAD (p.s.f.) (+ OR −)	CONCRETE & WOOD INSTALLATIONS ▲	
	WALL MOUNTINGS & FLOOR/CEILING MOUNTINGS	
	L + (ft)	L − (ft)
30	12'−3"	14'−9"
35	11'−9"	13'−8"
40	11'−4"	12'−9"
45	11'−1"	12'−0"
50	10'−9"	11'−5"
55	10'−6"	10'−11"
60	10'−3"	10'−5"
65	10'−0"	10'−0"
70	9'−8"	9'−8"
75	9'−4"	9'−4"
80	9'−0"	9'−0"
85	8'−9"	8'−9"
90	8'−6"	8'−6"
95	8'−3"	8'−3"
100	8'−1"	8'−1"
105	7'−11"	7'−11"
110	7'−8"	7'−7"
115	7'−6"	7'−3"
120	7'−4"	6'−11"
125	7'−3"	6'−8"
130	7'−1"	6'−5"
135	6'−11"	6'−2"
140	6'−10"	5'−11"
145	6'−8"	5'−9"
150	6'−7"	5'−7"
155	6'−6"	5'−5"
160	6'−5"	5'−2"
165	6'−3"	5'−1"
170	6'−2"	4'−11"
175	6'−1"	4'−9"
180	6'−0"	4'−8"
185	5'−11"	4'−6"
190	5'−10"	4'−5"
195	5'−9"	4'−3"
200	5'−9"	4'−2"
205	5'−8"	4'−1"

SCHEDULE #3

MAXIMUM SHUTTER SPAN
"L+" OR "L−" (ft.)*
INSTALLATIONS W/
SYMMETRICAL CENTERMATES,
TWO HV LOCKS OR TWO
LOCKING RODS TOP/BOTTOM
W/ ONE HV LOCK ♦
(SEE NOTE †)

MAXIMUM DESIGN LOAD (p.s.f.) (+ OR −)	CONCRETE & WOOD INSTALLATIONS ▲	
	FLOOR/CEILING MOUNTING	
	L + (ft)	L − (ft)
30	13'−1"	16'−0"
35	12'−7"	16'−0"
40	12'−2"	15'−2"
45	11'−9"	14'−3"
50	11'−6"	13'−7"
55	11'−3"	12'−11"
60	11'−0"	12'−4"
65	10'−9"	11'−11"
70	10'−7"	11'−5"
75	10'−4"	11'−1"
80	10'−0"	10'−9"
85	9'−9"	10'−5"
90	9'−5"	10'−1"
95	9'−2"	9'−10"
100	9'−0"	9'−7"
105	8'−9"	9'−4"
110	8'−7"	9'−2"
115	8'−4"	8'−11"
120	8'−2"	8'−9"
125	8'−0"	8'−5"
130	7'−10"	8'−1"
135	7'−9"	7'−9"
140	7'−7"	7'−6"
145	7'−5"	7'−3"
150	7'−4"	7'−0"
155	7'−2"	6'−9"
160	7'−1"	6'−7"
165	7'−0"	6'−4"
170	6'−11"	6'−2"
175	6'−9"	6'−0"
180	6'−8"	5'−10"
185	6'−7"	5'−8"
190	6'−6"	5'−6"
195	6'−5"	5'−5"
200	6'−4"	5'−3"
205	6'−3"	5'−1"

* NOTES:

(1) L+: MAXIMUM ALLOWABLE SPAN FOR A GIVEN POSITIVE DESIGN LOAD.
L−: MAX. ALLOWABLE SPAN FOR A GIVEN NEGATIVE DESIGN LOAD.

(2) PROCEDURE TO DETERMINE MAXIMUM SPAN FOR WALL MOUNTINGS OR FLOOR/CEILING:

GIVEN A POSITIVE DESIGN LOAD, DETERMINE MAXIMUM SPAN "L+" FROM SCHEDULE.
GIVEN A NEGATIVE DESIGN LOAD, DETERMINE MAXIMUM SPAN "L−" FROM SCHEDULE.

FINAL MAXIMUM ALLOWABLE SPAN IS EQUAL TO THE MINIMUM DETERMINED SPAN BETWEEN "L+" AND "L−".

(3) PROCEDURE TO DETERMINE MAXIMUM SPAN FOR COMBINATIONS IN BETWEEN WALL W/ FLOOR/CEILING MOUNTINGS:

FOR A GIVEN POSITIVE DESIGN LOAD:
DETERMINE:
L_1+= MAX. SPAN FOR WALL MOUNTING INSTALLATIONS.
L_2+= MAX. SPAN FOR FLOOR/CEILING MOUNTING INSTALLATIONS.

FOR A GIVEN NEGATIVE DESIGN LOAD:
DETERMINE:
L_1−= MAX. SPAN FOR WALL MOUNTING INSTALLATIONS.
L_2−= MAX. SPAN FOR FLOOR/CEILING MOUNTING INSTALLATIONS.

FINAL MAXIMUM ALLOWABLE SPAN IS EQUAL TO THE MINIMUM BETWEEN "L_1+", "L_2+", "L_1−" AND "L_2−"

(4) GO TO ANCHOR SCHEDULE WITH FINAL MAXIMUM ALLOWABLE SPAN AND NEGATIVE DESIGN LOAD TO DETERMINE MAXIMUM ANCHOR SPACING.

▲ MAXIMUM SHUTTER SPAN "L+" OR "L−" FOR INSTALLATIONS INTO WOOD SHALL BE LIMITED TO 105 psf. DESIGN LOAD.

† CORNER CENTERMATE #3 MAY BE USED AT ALL MOUNTING INSTALLATIONS. LOCKING SPECIFICATIONS SHALL BE AS INDICATED ON MANDATORY CONDITION #2 NOTE #5, SHEET 4 OF 14.

♦ SEPARATION TO GLASS REQUIREMENTS

(1) SEE MINIMUM SEPARATION TO GLASS SCHEDULE FOR SHUTTERS INSTALLED WITHIN THE FIRST 30'−0" ELEVATION OF BUILDING MEASURED AT BOTTOM OF SHUTTER.

(2) MINIMUM SEPARATION TO GLASS FOR SHUTTERS INSTALLED ABOVE 30'−0" ELEVATION OF BUILDING, MEASURED AT BOTTOM OF SHUTTER IS 3".

MINIMUM SEPARATION TO GLASS SCHEDULE:
SHUTTER W/ ONE LOCK

SHUTTER SPAN	INSTALLATION W/ **SYMMETRICAL** CENTERMATES	INSTALLATION W/ **OPPOSING** CENTERMATES
105" OR LESS	3 5/16"	4"
>105" TO MAX. ALLOWED	3 7/8"	4"

MINIMUM SEPARATION TO GLASS SCHEDULE:
SHUTTER W/ ONE LOCK & TWO LOCKING RODS OR WITH ONLY TWO LOCKS

SHUTTER SPAN	INSTALLATION W/ **SYMMETRICAL** CENTERMATES	INSTALLATION W/ **OPPOSING** CENTERMATES
105" OR LESS	2 3/4"	3 3/16"
>105" TO MAX. ALLOWED	3 1/4"	3 1/4"

INSTALLATION LEGEND

	CONCRETE & MANSORY (SHEETS 5 & 6)	WOOD (SHEETS 13 & 14)
WALL MOUNTING	# 1, 2, 3 & 4	# 1W, 2W, 3W, 4W, 5W & 6W
FLOOR/CEILING MOUNTING	# 5, 6, 7 & 8	# 8W, 9W & 10W

F.B.C.(**H.V.H.Z.**) MIAMI−DADE COUNTY

PRODUCT REVISED
as complying with the Florida Buiding Code
Acceptance No 05-0308.02
Expiration Date 06/01/2007
By Helmy A. Mekler
Miami Dade Product Control Division

MIAMI−DADE COUNTY

FEB 25 2005
P.E. SEAL/SIGNATURE/DATE

TILTECO INC.
TILLIT TESTING & ENGINEERING COMPANY
6355 N.W. 36th. St., Ste. 305, VIRGINIA GARDENS, FLORIDA 33166
Phone : (305)871−1530 . Fax : (305)871−1531
e−mail: tilteco@aol.com
EB−0006719
WALTER A. TILLIT Jr. P. E.
FLORIDA Lic. # 44167

ERNESTO RODRIGUEZ HURRICANE SHUTTER, INC.

(ASSA # 112)

5288 NW 72nd AVENUE
MIAMI, FL 33166
PHONE: (305)649−9993

© 2003 EASTERN METAL SUPPLY, INC.

BERTHA™ HIGH VELOCITY
ACCORDION SHUTTER SYSTEM

REV. No	DESCRIPTION	DATE
1	GENERAL	
2		
3		
4		
5		

SCALE:
DATE: 2/24/05
DRAWING No **05−034**
SHEET **9 OF 14**

ANCHORS SPACING LEGEND

TAPCON
ALL POINTS SOLID-SET
WEDGE-BOLT

MAXIMUM DESIGN PRESSURE RATING (p.s.f.) AND CORRESPONDING MAXIMUM ANCHOR* SPACING (in.) SCHEDULE FOR A GIVEN MAX. SHUTTER SPAN, DESIGN NEGATIVE LOAD AND A CORRESPONDING MOUNTING TYPE FOR CONCRETE OR CONCRETE BLOCK INSTALLATIONS

(SEE MOUNTINGS 1, 2, 3 & 4 ON SHEET 5)

* SEE ANCHOR SPECIFICATIONS ON SHEET 11

MAXIMUM SPAN (ft)	POURED CONCRETE																												POURED CONCRETE/CONCRETE BLOCK																			
	WALL MOUNTING 1 W/ Ⓒ HV 1" (Max.)B/O HEADER/ SILL #1								WALL MOUNTING 1 W/ Ⓕ HV 2" (Max.)B/O HEADER/ SILL #2								WALL MOUNTING 2								WALL MOUNTING 3 W/ Ⓒ HV 1" (Max.)B/O HEADER/ SILL #1								WALL MOUNTING 3 W/ Ⓕ HV 2" (Max.)B/O HEADER/ SILL #2								WALL MOUNTING 4							
	NEGATIVE DESIGN LOAD (psf)								NEGATIVE DESIGN LOAD (psf)								NEGATIVE DESIGN LOAD (psf)								NEGATIVE DESIGN LOAD (psf)								NEGATIVE DESIGN LOAD (psf)								NEGATIVE DESIGN LOAD (psf)							
	30	40	60	75	90	120	160	205	30	40	60	75	90	120	160	205	30	40	60	75	90	120	160	205	30	40	60	75	90	120	160	205	30	40	60	75	90	120	160	205	30	40	60	75	90	120	160	205
3'-0" OR LESS	14	12	10	9	8	8	6	6	14	12	10	9	8	8	6	6	14	12	10	9	8	8	6	6	14	12	10	9	8	8	6	3	14	12	10	9	8	8	6	3	14	12	10	9	8	8	6	6
	14	12	10	9	8	8	6	6	14	12	10	9	8	8	6	6	14	12	10	9	8	8	6	6	14	12	10	9	8	8	6	6	14	12	10	9	8	8	6	6	14	12	10	9	8	8	6	6
	14	12	10	9	8	8	6	6	14	12	10	9	8	8	6	6	14	12	10	9	8	8	6	6	14	12	10	9	8	8	6	4.5	14	12	10	9	8	8	6	6	14	12	10	9	8	8	6	6
4'-0"	14	12	10	9	8	8	6	3.5	14	12	10	9	8	8	6	6	14	12	10	9	8	8	6	6	14	12	10	9	8	7.5	3	–	14	12	10	9	8	7.5	5.5	–	14	12	10	9	8	7.5	5.5	3.5
	14	12	10	9	8	8	6	4	14	12	10	9	8	8	6	6	14	12	10	9	8	8	6	6	14	12	10	9	8	8	5.5	–	14	12	10	9	8	8	6	5	14	12	10	9	8	8	6	6
	14	12	10	9	8	8	6	6	14	12	10	9	8	8	6	6	14	12	10	9	8	8	6	6	14	12	10	9	8	8	4	–	14	12	10	9	8	8	6	3.5	14	12	10	9	8	8	6	6
5'-0"	14	12	10	9	8	8	4	3	14	12	10	9	8	8	6	3	14	12	10	9	8	8	6	6	14	12	10	9	8	3	–	–	14	12	10	9	8	6	–	–	14	12	10	9	8	6	4	–
	14	12	10	9	8	8	5.5	–	14	12	10	9	8	8	6	3.5	14	12	10	9	8	8	6	6	14	12	10	9	8	7	–	–	14	12	10	9	8	8	6	–	14	12	10	9	8	8	6	6
	14	12	10	9	8	8	6	4.5	14	12	10	9	8	8	6	6	14	12	10	9	8	8	6	6	14	12	10	9	8	5	–	–	14	12	10	9	8	8	4	–	14	12	10	9	8	8	6	4
6'-0"	14	12	10	9	8	5	3	–	14	12	10	9	8	8	3.5	–	14	12	10	9	8	8	6	5	14	12	10	8	4	–	–	–	14	12	10	8	6.5	3.5	–	–	14	12	10	8	7	5	–	–
	14	12	10	9	8	5.5	–	–	14	12	10	9	8	8	4.5	–	14	12	10	9	8	8	6	6	14	12	10	9	8	4	–	–	14	12	10	9	8	8	3	–	14	12	10	9	8	8	6	4.5
	14	12	10	9	8	8	5	3.5	14	12	10	9	8	8	6	4	14	12	10	9	8	8	6	6	14	12	10	9	7.5	3	–	–	14	12	10	9	8	7	–	–	14	12	10	9	8	8	5	3
7'-0"	14	12	10	9	7	3.5	–	–	14	12	10	9	8	5.5	–	–	14	12	10	9	8	8	6	4	14	12	9	5	–	–	–	–	14	12	8	7	5.5	–	–	–	14	12	9	7	6	3.5	–	–
	14	12	10	9	8	4	–	–	14	12	10	9	8	6.5	3	–	14	12	10	9	8	8	6	5	14	12	10	9	6	–	–	–	14	12	10	9	8	5	–	–	14	12	10	9	8	8	5	3.5
	14	12	10	9	8	6.5	4	–	14	12	10	9	8	8	5	–	14	12	10	9	8	8	6	6	14	12	10	9	4	–	–	–	14	12	10	9	8	3.5	–	–	14	12	10	9	8	6.5	3.5	–
8'-0"	14	12	10	8	5	3	–	–	14	12	10	8	8	3.5	–	–	14	12	10	9	8	8	5	–	14	11.5	7	3	–	–	–	–	14	11.5	7	6	3.5	–	–	–	14	11.5	7.5	6	5	–	–	–
	14	12	10	9	5.5	–	–	–	14	12	10	9	8	4.5	–	–	14	12	10	9	8	8	6	–	14	12	10	7	4	–	–	–	14	12	10	9	8	3	–	–	14	12	10	9	8	6.5	4	–
	14	12	10	9	8	5	–	–	14	12	10	9	8	7	–	–	14	12	10	9	8	8	6	–	14	12	10	5	3	–	–	–	14	12	10	9	7	–	–	–	14	12	10	9	8	5	3	–
9'-0"	14	12	10	5.5	3.5	–	–	–	14	12	10	9	6.5	–	–	–	14	12	10	9	8	6.5	–	–	13.5	10	4	–	–	–	–	–	13.5	10	6.5	5	–	–	–	–	13.5	10	7	5.5	4	–	–	–
	14	12	10	6.5	4	–	–	–	14	12	10	9	7.5	3	–	–	14	12	10	9	8	7.5	–	–	14	12	10	5	–	–	–	–	14	12	10	9	5.5	–	–	–	14	12	10	9	8	5.5	–	–
	14	12	10	9	7	4	–	–	14	12	10	9	8	5.5	–	–	14	12	10	9	8	8	–	–	14	12	7.5	3.5	–	–	–	–	14	12	10	9	4	–	–	–	14	12	10	9	7	4	–	–
10'-0"	14	12	8	4.5	3	–	–	–	14	12	10	9	4.5	–	–	–	14	12	10	9	8	–	–	–	12	9	3	–	–	–	–	–	12	9	6	3	–	–	–	–	12	9	6	4.5	3	–	–	–
	14	12	9.5	5	3.5	–	–	–	14	12	10	9	5.5	–	–	–	14	12	10	9	8	–	–	–	14	12	7	3.5	–	–	–	–	14	12	10	8	4	–	–	–	14	12	10	9	7.5	–	–	–
	14	12	10	8.5	5.5	–	–	–	14	12	10	9	8	–	–	–	14	12	10	9	8	–	–	–	14	12	5	–	–	–	–	–	14	12	10	5.5	–	–	–	–	14	12	10	8	5.5	–	–	–
11'-0"	14	12	6	3.5	–	–	–	–	14	12	10	6	–	–	–	–	14	12	10	9	–	–	–	–	11	8.5	–	–	–	–	–	–	11	8	5.5	–	–	–	–	–	11	8.5	5.5	3.5	–	–	–	–
	14	12	7	4	–	–	–	–	14	12	10	7	–	–	–	–	14	12	10	9	–	–	–	–	14	12	5	3.5	–	–	–	–	14	12	10	5	–	–	–	–	14	12	10	9	–	–	–	–
	14	12	10	7	–	–	–	–	14	12	10	9	–	–	–	–	14	12	10	9	–	–	–	–	14	12	3.5	–	–	–	–	–	14	12	10	3.5	–	–	–	–	14	12	10	6.5	–	–	–	–
12'-0"	14	12	5	–	–	–	–	–	14	12	10	–	–	–	–	–	14	12	10	–	–	–	–	–	10	7.5	–	–	–	–	–	–	10	7.5	3.5	–	–	–	–	–	10	7.5	5	–	–	–	–	–
	14	12	5.5	–	–	–	–	–	14	12	10	–	–	–	–	–	14	12	10	–	–	–	–	–	14	12	4	–	–	–	–	–	14	12	10	–	–	–	–	–	14	12	10	–	–	–	–	–
	14	12	9	–	–	–	–	–	14	12	10	–	–	–	–	–	14	12	10	–	–	–	–	–	14	12	3	–	–	–	–	–	14	12	7	–	–	–	–	–	14	12	9	5.5	–	–	–	–
13'-0"	14	12	4	–	–	–	–	–	14	12	7.5	–	–	–	–	–	14	12	10	–	–	–	–	–	9	5	–	–	–	–	–	–	9.5	7	–	–	–	–	–	–	9.5	7	4	–	–	–	–	–
	14	12	4.5	–	–	–	–	–	14	12	9	–	–	–	–	–	14	12	10	–	–	–	–	–	14	12	4	–	–	–	–	–	14	12	6.5	–	–	–	–	–	14	12	10	–	–	–	–	–
	14	12	7.5	–	–	–	–	–	14	12	10	–	–	–	–	–	14	12	10	–	–	–	–	–	14	9	–	–	–	–	–	–	14	12	4.5	–	–	–	–	–	14	12	7.5	–	–	–	–	–
14'-0"	14	10.5	3.5	–	–	–	–	–	14	12	5.5	–	–	–	–	–	14	12	10	–	–	–	–	–	8.5	3.5	–	–	–	–	–	–	8.5	6.5	–	–	–	–	–	–	8.5	6.5	3.5	–	–	–	–	–
	14	12	4	–	–	–	–	–	14	12	6.5	–	–	–	–	–	14	12	10	–	–	–	–	–	14	9	4	–	–	–	–	–	14	12	6	–	–	–	–	–	14	12	9	–	–	–	–	–
	14	12	6.5	–	–	–	–	–	14	12	10	–	–	–	–	–	14	12	10	–	–	–	–	–	14	6.5	–	–	–	–	–	–	14	12	3.5	–	–	–	–	–	14	12	6.5	–	–	–	–	–
15'-0"	14	8.5	–	–	–	–	–	–	14	12	–	–	–	–	–	–	14	12	–	–	–	–	–	–	8	3	–	–	–	–	–	–	8	6	–	–	–	–	–	–	8	6	–	–	–	–	–	–
	14	9.5	–	–	–	–	–	–	14	12	–	–	–	–	–	–	14	12	–	–	–	–	–	–	14	7	–	–	–	–	–	–	14	12	–	–	–	–	–	–	14	12	–	–	–	–	–	–
	14	12	–	–	–	–	–	–	14	12	–	–	–	–	–	–	14	12	–	–	–	–	–	–	14	5	–	–	–	–	–	–	14	11.5	–	–	–	–	–	–	14	11	–	–	–	–	–	–
16'-0"	14	–	–	–	–	–	–	–	14	–	–	–	–	–	–	–	14	–	–	–	–	–	–	–	7.5	–	–	–	–	–	–	–	7.5	–	–	–	–	–	–	–	7.5	–	–	–	–	–	–	–
	14	–	–	–	–	–	–	–	14	–	–	–	–	–	–	–	14	–	–	–	–	–	–	–	14	–	–	–	–	–	–	–	14	–	–	–	–	–	–	–	14	–	–	–	–	–	–	–
	14	–	–	–	–	–	–	–	14	–	–	–	–	–	–	–	14	–	–	–	–	–	–	–	14	–	–	–	–	–	–	–	14	–	–	–	–	–	–	–	14	–	–	–	–	–	–	–

F.B.C.(**H.V.H.Z.**) MIAMI-DADE COUNTY

PRODUCT REVISED
as complying with the Florida Building Code
Acceptance No 05-0308.02
Expiration Date 06/01/2007
By Helmy A. Mele
Miami Dade Product Control Division

MIAMI-DADE COUNTY

FEB 25 2005

P.E. SEAL/SIGNATURE/DATE

TILTECO INC.
TILLIT TESTING & ENGINEERING COMPANY
6355 N.W. 36th. St., Ste. 305, VIRGINIA GARDENS, FLORIDA 33166
Phone : (305)871-1530 . Fax : (305)871-1531
e-mail: tilteco@aol.com
EB-0006719
WALTER A. TILLIT Jr. P. E.
FLORIDA Lic. # 44167

ERNESTO RODRIGUEZ HURRICANE SHUTTER, INC.
(ASSA # 112)
5288 NW 72nd AVENUE
MIAMI, FL 33166
PHONE: (305)649-9993

© 2003 EASTERN METAL SUPPLY, INC.

BERTHA™ HIGH VELOCITY
ACCORDION SHUTTER SYSTEM

REV. No	DESCRIPTION	DATE
1	GENERAL	
2		
3		
4		
5		

SCALE:
DATE: 2/24/05
DRAWING No **05-034**
SHEET **10 OF 14**

ANCHORS SPACING LEGEND

TAPCON
ALL POINTS SOLID-SET
WEDGE-BOLT

MAXIMUM DESIGN PRESSURE RATING (p.s.f.) AND CORRESPONDING MAXIMUM ANCHOR* SPACING (in.) SCHEDULE FOR A GIVEN MAX. SHUTTER SPAN, DESIGN NEGATIVE LOAD AND A CORRESPONDING MOUNTING TYPE FOR CONCRETE INSTALLATIONS

(SEE MOUNTINGS 5, 6, 7, & 8 ON SHEET 6)

POURED CONCRETE

CEILING MOUNTING 5 — NEGATIVE DESIGN LOAD (psf)

MAXIMUM SPAN (ft)	30	40	60	75	90	120	160	205
3'-0" OR LESS	14	12	10	9	8	8	6	6
	14	12	10	9	8	8	6	6
	14	12	10	9	8	8	6	6
4'-0"	14	12	10	9	8	8	6	6
	14	12	10	9	8	8	6	6
	14	12	10	9	8	8	6	6
5'-0"	14	12	10	9	8	8	6	5
	14	12	10	9	8	8	6	5.5
	14	12	10	9	8	8	6	6
6'-0"	14	12	10	9	8	7.5	5.5	4
	14	12	10	9	8	8	6	5
	14	12	10	9	8	8	6	6
7'-0"	14	12	10	9	8	6	4.5	3.5
	14	12	10	9	8	7	5	4
	14	12	10	9	8	8	6	6
8'-0"	14	12	10	9	7.5	5.5	4	–
	14	12	10	9	8	6	4.5	–
	14	12	10	9	8	8	6	–
9'-0"	14	12	10	8	6.5	5	–	–
	14	12	10	9	7.5	5.5	–	–
	14	12	10	9	8	8	–	–
10'-0"	14	12	9	7	6	4.5	–	–
	14	12	10	8	6.5	5	–	–
	14	12	10	9	8	7	–	–
11'-0"	14	12	8	6.5	5	4	–	–
	14	12	9	7	6	4.5	–	–
	14	12	10	9	8	6.5	–	–
12'-0"	14	11	7.5	6	5	–	–	–
	14	12	8	6.5	5.5	–	–	–
	14	12	10	9	8	–	–	–
13'-0"	13.5	10	6.5	5.5	4.5	–	–	–
	14	11.5	7.5	6	5	–	–	–
	14	12	10	8.5	7	–	–	–
14'-0"	12.5	9.5	6	5	–	–	–	–
	14	10.5	7	5.5	–	–	–	–
	14	12	10	8	–	–	–	–
15'-0"	12	9	6	–	–	–	–	–
	13.5	10	6.5	–	–	–	–	–
	14	12	9.5	–	–	–	–	–
16'-0"	11	8	5.5	–	–	–	–	–
	12.5	9.5	6	–	–	–	–	–
	14	12	9	–	–	–	–	–

FLOOR MOUNTING 6 — NEGATIVE DESIGN LOAD (psf)

MAXIMUM SPAN (ft)	30	40	60	75	90	120	160	205
3'-0" OR LESS	14	12	10	9	8	8	6	6
	14	12	10	9	8	8	6	6
	14	12	10	9	8	8	6	6
4'-0"	14	12	10	9	8	8	6	6
	14	12	10	9	8	8	6	6
	14	12	10	9	8	8	6	6
5'-0"	14	12	10	9	8	8	6	6
	14	12	10	9	8	8	6	6
	14	12	10	9	8	8	6	6
6'-0"	14	12	10	9	8	8	6	6
	14	12	10	9	8	8	6	6
	14	12	10	9	8	8	6	6
7'-0"	14	12	10	9	8	8	6	6
	14	12	10	9	8	8	6	6
	14	12	10	9	8	8	6	6
8'-0"	14	12	10	9	8	8	6	–
	14	12	10	9	8	8	6	–
	14	12	10	9	8	8	6	–
9'-0"	14	12	10	9	8	8	–	–
	14	12	10	9	8	8	–	–
	14	12	10	9	8	8	–	–
10'-0"	14	12	10	9	8	8	–	–
	14	12	10	9	8	8	–	–
	14	12	10	9	8	8	–	–
11'-0"	14	12	10	9	8	8	–	–
	14	12	10	9	8	8	–	–
	14	12	10	9	8	8	–	–
12'-0"	14	12	10	9	8	–	–	–
	14	12	10	9	8	–	–	–
	14	12	10	9	8	–	–	–
13'-0"	14	12	10	9	8	–	–	–
	14	12	10	9	8	–	–	–
	14	12	10	9	8	–	–	–
14'-0"	14	12	10	9	–	–	–	–
	14	12	10	9	–	–	–	–
	14	12	10	9	–	–	–	–
15'-0"	14	12	10	–	–	–	–	–
	14	12	10	–	–	–	–	–
	14	12	10	–	–	–	–	–
16'-0"	14	12	10	–	–	–	–	–
	14	12	10	–	–	–	–	–
	14	12	10	–	–	–	–	–

FLOOR MOUNTING 7 — NEGATIVE DESIGN LOAD (psf)

MAXIMUM SPAN (ft)	30	40	60	75	90	120	160	205
3'-0" OR LESS	14	12	10	9	8	8	6	6
	14	12	10	9	8	8	6	6
	14	12	10	9	8	8	6	6
4'-0"	14	12	10	9	8	8	6	5
	14	12	10	9	8	8	6	5.5
	14	12	10	9	8	8	6	6
5'-0"	14	12	10	9	8	7	5	4
	14	12	10	9	8	8	6	4.5
	14	12	10	9	8	8	6	6
6'-0"	14	12	10	9	7.5	5.5	4	3
	14	12	10	9	8	6.5	5	3.5
	14	12	10	9	8	8	6	5.5
7'-0"	14	12	10	8	6.5	5	3.5	–
	14	12	10	9	7.5	5.5	4	3
	14	12	10	9	8	8	6	4.5
8'-0"	14	12	8.5	7	5.5	4	3	–
	14	12	10	8	6.5	5	3.5	–
	14	12	10	9	8	7	5	–
9'-0"	14	11.5	7.5	6	5	3.5	–	–
	14	12	8.5	7	5.5	4	–	–
	14	12	10	9	8	6	–	–
10'-0"	14	10.5	7	5.5	4.5	3.5	–	–
	14	12	8	6	5	4	–	–
	14	12	10	9	7.5	5.5	–	–
11'-0"	12.5	9.5	6	5	4	3	–	–
	14	10.5	7	5.5	4.5	3.5	–	–
	14	12	10	8	7	5	–	–
12'-0"	11.5	8.5	5.5	4.5	3.5	–	–	–
	13	10	6.5	5	4	–	–	–
	14	12	9.5	7.5	6	–	–	–
13'-0"	10.5	8	5	4	3.5	–	–	–
	12	9	6	4.5	4	–	–	–
	14	12	8.5	7	6	–	–	–
14'-0"	10	7.5	5	4	–	–	–	–
	11	8.5	5.5	4.5	–	–	–	–
	14	12	8	6.5	–	–	–	–
15'-0"	9	7	4.5	–	–	–	–	–
	10.5	8	5	–	–	–	–	–
	14	11.5	7.5	–	–	–	–	–
16'-0"	8.5	6.5	4	–	–	–	–	–
	10	7.5	5	–	–	–	–	–
	14	10.5	7	–	–	–	–	–

FLOOR MOUNTING 8 — NEGATIVE DESIGN LOAD (psf)

MAXIMUM SPAN (ft)	30	40	60	75	90	120	160	205
3'-0" OR LESS	14	12	10	9	8	8	6	6
	14	12	10	9	8	8	6	6
	14	12	10	9	8	8	6	6
4'-0"	14	12	10	9	8	7.5	5.5	4.5
	14	12	10	9	8	8	6	5
	14	12	10	9	8	8	6	6
5'-0"	14	12	10	9	8	6	4.5	3.5
	14	12	10	9	8	7	5	4
	14	12	10	9	8	8	6	6
6'-0"	14	12	10	8	7	5	3.5	3
	14	12	10	9	8	6	4.5	3.5
	14	12	10	9	8	8	6	5
7'-0"	14	12	9	7	6	4.5	3	–
	14	12	10	8	6.5	5	3.5	3
	14	12	10	9	8	7.5	5.5	4
8'-0"	14	11.5	7.5	6	5	4	3	–
	14	12	9	7	6	4.5	3	–
	14	12	10	9	8	6.5	5	–
9'-0"	14	10.5	7	5.5	4.5	3.5	–	–
	14	12	8	6	5	4	–	–
	14	12	10	9	7.5	5.5	–	–
10'-0"	12.5	9.5	6	5	4	3	–	–
	14	10.5	7	5.5	4.5	3.5	–	–
	14	12	10	8.5	7	5	–	–
11'-0"	11.5	8.5	5.5	4.5	3.5	2.5	–	–
	13	9.5	6.5	5	4	3	–	–
	14	12	9.5	7.5	6	4.5	–	–
12'-0"	10.5	7.5	5	4	3.5	–	–	–
	12	9	6	4.5	4	–	–	–
	14	12	8.5	7	5.5	–	–	–
13'-0"	9.5	7	4.5	3.5	3	–	–	–
	11	8	5.5	4	3.5	–	–	–
	14	12	8	6.5	5	–	–	–
14'-0"	9	6.5	4.5	3.5	–	–	–	–
	10	7.5	5	4	–	–	–	–
	14	11	7.5	6	–	–	–	–
15'-0"	8	6	4	–	–	–	–	–
	9.5	7	4.5	–	–	–	–	–
	14	10.5	7	–	–	–	–	–
16'-0"	7.5	5.5	4	–	–	–	–	–
	9	6.5	4.5	–	–	–	–	–
	13	9.5	6.5	–	–	–	–	–

*NOTES ON ANCHOR REQUIREMENTS: POURED CONCRETE OR CONCRETE BLOCK SUBSTRATES

1. ANCHORS TO WALL SHALL BE AS FOLLOWS:

(A) TO EXISTING POURED CONCRETE: (Min. f'c = 3 ksi)
- 1/4"ø TAPCON ANCHORS, AS MANUFACTURED BY I.T.W. RAMSET/ RED HEAD.
- 1/4"ø x 3/4" ALL POINTS SOLID-SET ANCHORS AS DISTRIBUTED BY ALL POINTS SCREW, BOLT & SPECIALTY COMPANY.
- 1/4"ø WEDGE-BOLT ANCHORS AS MANUFACTURED BY POWERS FASTENING, INC.

NOTES:

A.1) MINIMUM EMBEDMENT INTO POURED CONCRETE OF TAPCON ANCHORS IS 1 3/4", AND 2" FOR WEDGE-BOLT ANCHORS.

A.2) MINIMUM EMBEDMENT OF 1/4"ø x 3/4" ALL POINTS SOLID-SET ANCHORS SHALL BE 7/8" INTO THE POURED CONCRETE. NO EMBEDMENT INTO STUCCO SHALL BE PERMITTED. 1/4" ø-20 S.S. MACHINE SCREW USED SHALL BE 1 1/2" LONG MINIMUM SHOULD STUCCO EXIST, AND 1" MINIMUM FOR WALLS WITH NO STUCCO.

A.3) IN CASE THAT PRECAST STONE, PRECAST CONCRETE PANELS, PAVERS OR ANY VENEER BE FOUND ON THE EXISTING WALL OR FLOOR, ANCHORS SHALL BE LONG ENOUGH TO REACH THE MAIN STRUCTURE BEHIND SAID WALL FINISHES. ANCHORAGE SHALL BE AS INDICATED ON NOTES A.1) & A.2) ABOVE. FOR INSTALLATIONS ON VINYL SIDING OR EIFS CONSULT THIS ENGINEER.

(B) TO EXISTING CONCRETE BLOCK WALL:
- 1/4"ø TAPCON ANCHORS, AS MANUFACTURED BY I.T.W. RAMSET/ RED HEAD.
- 1/4"ø x 3/4" ALL POINTS SOLID-SET ANCHORS AS DISTRIBUTED BY ALL POINTS SCREW, BOLT & SPECIALTY COMPANY.
- 1/4"ø WEDGE-BOLT W/ 1/4"ø BLOCK-PLUG ANCHORS AS MANUFACTURED BY POWERS FASTENING, INC.

NOTES:

B.1) MINIMUM EMBEDMENT INTO CONCRETE BLOCK OF TAPCON & WEDGE-BOLT ANCHORS, IS 1 1/4".

B.2) MINIMUM EMBEDMENT OF 1/4"ø x 3/4" ALL POINTS SOLID-SET ANCHORS SHALL BE ENTIRELY EMBEDDED INTO THE CONCRETE BLOCK. NO EMBEDMENT INTO STUCCO SHALL BE PERMITTED. 1/4" ø-20 S.S. MACHINE SCREW USED SHALL BE 1 1/2" LONG MINIMUM SHOULD STUCCO EXIST, AND 1" MINIMUM FOR WALLS WITH NO STUCCO.

B.3) IN CASE THAT PRECAST STONE, PRECAST CONCRETE PANELS, PAVERS OR ANY VENEER BE FOUND ON THE EXISTING WALL OR FLOOR, ANCHORS SHALL BE LONG ENOUGH TO REACH THE MAIN STRUCTURE BEHIND SAID WALL FINISHES. ANCHORAGE SHALL BE AS INDICATED ON NOTES B.1) & B.2) ABOVE. FOR INSTALLATIONS ON VINYL SIDING OR EIFS CONSULT THIS ENGINEER.

(C) ANCHORS SHALL BE INSTALLED FOLLOWING ALL OF THE RECOMMENDATIONS AND SPECIFICATIONS OF THE ANCHOR'S MANUFACTURER.

(D) SEE SCHEDULE BELOW FOR EDGE DISTANCE (E.D.) VERSUS SPACING RELATIONSHIP FOR ANCHORS.

EDGE DISTANCE VERSUS SPACING FOR ANCHORS

MAXIMUM ANCHOR SPACINGS ARE VALID FOR 3 1/2" EDGE DISTANCE FOR 1/4"ø TAPCON AND SOLID SET AND WEDGE-BOLT FOR E. D. LESS THAN THE ABOVE MENTIONED, REDUCE ANCHOR SPACING BY MULTIPLYING SPACING SHOWN ON SCHEDULE BY THE FOLLOWING FACTORS. (NOTE : Min. E. D. FOR ALL POINT SOLID SET ANCHORS IS 3"). REDUCED SPACING OBTAINED USING FACTOR SHALL NOT BE LESS THAN MINIMUM SPACING INDICATED FOR EACH ANCHOR TYPE.

ACTUAL E. D.	FACTOR		
	WEDGE-BOLT	1/4"ø TAPCON	SOLID SET
	MIN. SPACING = 3"	MIN. SPACING = 3"	MIN. SPACING = 3.5"
3"	0.83	0.83	0.78
2 1/2"	0.66	0.66	–
2"	0.50	0.50	–

F.B.C.(**H.V.H.Z.**) MIAMI-DADE COUNTY

PRODUCT REVISED
as complying with the Florida Buiding Code
Acceptance No 05-0308.02
Expiration Date 06/01/2007
By [signature]
Miami Dade Product Control Division

MIAMI-DADE COUNTY

FEB 2 5 2005

P.E. SEAL/SIGNATURE/DATE

TILTECO INC.
TILLIT TESTING & ENGINEERING COMPANY
6355 N.W. 36th. St., Ste. 305, VIRGINIA GARDENS, FLORIDA 33166
Phone : (305)871-1530 . Fax : (305)871-1531
e-mail: tilteco@aol.com
EB-0006719
WALTER A. TILLIT Jr. P. E.
FLORIDA Lic. # 44167

ERNESTO RODRIGUEZ HURRICANE SHUTTER, INC.
(ASSA # 112)
5288 NW 72nd AVENUE
MIAMI, FL 33166
PHONE: (305)649-9993

© 2003 EASTERN METAL SUPPLY, INC.

BERTHA™ HIGH VELOCITY
ACCORDION SHUTTER SYSTEM

REV. No	DESCRIPTION	DATE
1	GENERAL	
2		
3		
4		
5		

SCALE:
DATE: 2/24/05
DRAWING No **05-034**

MAXIMUM DESIGN PRESSURE RATING (p.s.f.) AND CORRESPONDING MAXIMUM ANCHOR+ SPACING (in.) SCHEDULE FOR A GIVEN MAX. SHUTTER SPAN, NEGATIVE DESIGN LOAD AND A CORRESPONDING MOUNTING TYPE.

(SEE MOUNTINGS ON SHEETS 13 & 14).

MAXIMUM SPAN (ft)	SUBSTRATE																																							
	SOUTHERN PINE No. 2 W/ MIN. G=0.55, DOUGLAS FIR W/ MIN. G=0.50												SPRUCE PINE FIR NORTH W/ MIN. G=0.43												SPRUCE PINE FIR SOUTH W/ MIN. G=0.36												1/2" MIN. CDX PLYWOOD					
	WALL MOUNTINGS 1W, 2W, 3W & 6W						CEILING MOUNT 8W FLOOR MOUNTINGS 9W & 10W						WALL MOUNTINGS 1W, 2W, 3W & 6W						CEILING MOUNT 8W FLOOR MOUNTINGS 9W & 10W						WALL MOUNTINGS 1W, 2W, 3W & 6W						CEILING MOUNT 8W FLOOR MOUNTINGS 9W & 10W						WALL MOUNTINGS 4W & 5W					
	NEGATIVE DESIGN LOAD (psf)						NEGATIVE DESIGN LOAD (psf)						NEGATIVE DESIGN LOAD (psf)						NEGATIVE DESIGN LOAD (psf)						NEGATIVE DESIGN LOAD (psf)						NEGATIVE DESIGN LOAD (psf)						NEGATIVE DESIGN LOAD (psf)					
	30	40	60	75	90	105	30	40	60	75	90	105	30	40	60	75	90	105	30	40	60	75	90	105	30	40	60	75	90	105	30	40	60	75	90	105	30	40	60	75	90	105
3'-0" OR LESS	12	10	10	9	8	8	6	6	6	6	6	6	12	10	10	9	8	8	6	6	6	6	6	6	12	10	10	9	8	8	6	6	6	6	6	6	6	5	4	4	4	3
4'-0"	12	10	10	9	8	8	6	6	6	6	6	6	12	10	10	9	8	8	6	6	6	6	6	6	12	10	10	9	8	8	6	6	6	6	6	6	6	5	4	4	4	3
5'-0"	12	10	10	9	8	8	6	6	6	6	6	5.5	12	10	10	9	8	8	6	6	6	6	6	5	12	10	10	9	8	7	6	6	6	6	6	5	6	5	4	4	4	3
6'-0"	12	10	10	9	8	6.5	6	6	6	6	5.5	4.5	12	10	10	9	8	5	6	6	6	5.5	5	4.5	12	10	10	9	6	3.5	6	6	6	6	5	4.5	6	5	4	4	3.5	–
7'-0"	12	10	10	9	6.5	4	6	6	6	5.5	4.5	4	12	10	10	9	5	3	6	6	6	5	4	3.5	12	10	10	7	3.5	–	6	6	6	5	4	3.5	6	5	4	4	–	–
8'-0"	12	10	10	7.5	4.5	3	6	6	6	5	4	3.5	12	10	10	6	3.5	–	6	6	5	4.5	3.5	3	12	10	10	4	–	–	6	6	5	4.5	3.5	3	6	5	4	–	–	–
9'-0"	12	10	10	5	3.5	–	6	6	5.5	4.5	3.5	3	12	10	9	4	–	–	6	6	4.5	4	3	3	12	10	4	3	–	–	6	6	4.5	4	3	3	6	5	3.5	–	–	–
10'-0"	12	10	7.5	4	–	–	6	6	5	4	3	–	12	10	6	3	–	–	6	6	4	3.5	3	–	12	10	3	–	–	–	6	6	4	3.5	3	–	6	5	–	–	–	–
11'-0"	12	10	5.5	–	–	–	6	6	4.5	–	–	–	12	10	4.5	–	–	–	6	5.5	3.5	–	–	–	12	10	–	–	–	–	6	5.5	4	–	–	–	6	5	–	–	–	–
12'-0"	12	10	4.5	–	–	–	6	6	4	–	–	–	12	10	3.5	–	–	–	6	5	3.5	–	–	–	12	10	–	–	–	–	6	5	3.5	–	–	–	6	5	–	–	–	–
13'-0"	12	10	–	–	–	–	6	6	–	–	–	–	12	10	–	–	–	–	6	4.5	–	–	–	–	12	7.5	–	–	–	–	6	4.5	–	–	–	–	6	4.5	–	–	–	–
14'-0"	12	10	–	–	–	–	6	5.5	–	–	–	–	12	7	–	–	–	–	5.5	4.5	–	–	–	–	12	7	–	–	–	–	5.5	4.5	–	–	–	–	6	3	–	–	–	–
15'-0"	12	–	–	–	–	–	6	–	–	–	–	–	12	–	–	–	–	–	5	–	–	–	–	–	12	–	–	–	–	–	5	–	–	–	–	–	6	–	–	–	–	–
16'-0"	12	–	–	–	–	–	6	–	–	–	–	–	12	–	–	–	–	–	5	–	–	–	–	–	11.5	–	–	–	–	–	5	–	–	–	–	–	6	–	–	–	–	–

+ NOTES ON ANCHORS REQUIREMENTS: WOOD SUBSTRATES.

1. ANCHORS TO WALL, FLOOR OR SOLID WOOD SOFFIT SHALL BE AS FOLLOWS:

– 1/4"ø TAPCON ANCHORS, AS MANUFACTURED BY I.T.W. BUILDEX W/ MINIMUM EMBEDMENT AS INDICATED AT EACH SECTION ON SHEETS 13 & 14.
EXCEPTION: SEE NOTE 2 BELOW.

2. ANCHORS TO HOLLOW CEILING SHALL BE AS PER MOUNTING TYPE 7W, SHEET 14 AND SHALL CONSIST OF LAG SCREWS AS PER NDS 1997 SPECIFICATIONS.

3. SUBSTRATE SHALL CONSIST OF THE FOLLOWING:
–SOUTHERN PINE No. 2 W/ G=0.55 (N.D.S)
–DOUGLAS FIR W/ G=0.50 (N.D.S.)
–SPRUCE PINE FIR NORTH W/ G=0.43 (N.D.S.)
–SPRUCE PINE FIR SOUTH W/ G=0.36 (N.D.S.)
–MIN. 1/2" CDX PLYWOOD (1986 APA)

4. ANCHORS SHALL BE INSTALLED FOLLOWING ALL OF THE RECOMMENDATIONS AND SPECIFICATIONS OF THE ANCHOR'S MANUFACTURER.

F.B.C.(**H.V.H.Z.**) MIAMI–DADE COUNTY

PRODUCT REVISED
as complying with the Florida Buiding Code
Acceptance No 05-0308.02
Expiration Date 06/01/2007
By Helmy A. Mekar
Miami Dade Product Control Division

MIAMI–DADE COUNTY

FEB 25 2005

P.E. SEAL/SIGNATURE/DATE

TILTECO INC.
TILLIT TESTING & ENGINEERING COMPANY
6365 N.W. 36th. St., Ste. 305, VIRGINIA GARDENS, FLORIDA 33166
Phone : (305)871–1530 . Fax : (305)871–1531
e–mail: tilteco@aol.com
EB–0006719
WALTER A. TILLIT Jr. P. E.
FLORIDA Lic. # 44167

ERNESTO RODRIGUEZ HURRICANE SHUTTER, INC.

(ASSA # 112)

5288 NW 72nd AVENUE
MIAMI, FL 33166
PHONE: (305)649–9993

© 2003 EASTERN METAL SUPPLY, INC.

BERTHA™ HIGH VELOCITY
ACCORDION SHUTTER SYSTEM

REV. No	DESCRIPTION	DATE
1	GENERAL	
2		
3		
4		
5		

SCALE:
DATE: 2/24/05
DRAWING No **05–034**
SHEET **12 OF 14**

INSTALLATION DETAILS ON EXISTING WOOD BUILDINGS

NOTE:
1–SEE SHEET 3 FOR TYPICAL SHUTTER ASSEMBLY
2–MOUNTING SECTIONS CAN BE COMBINED IN ANY WAY TO SUIT ANY INSTALLATION.

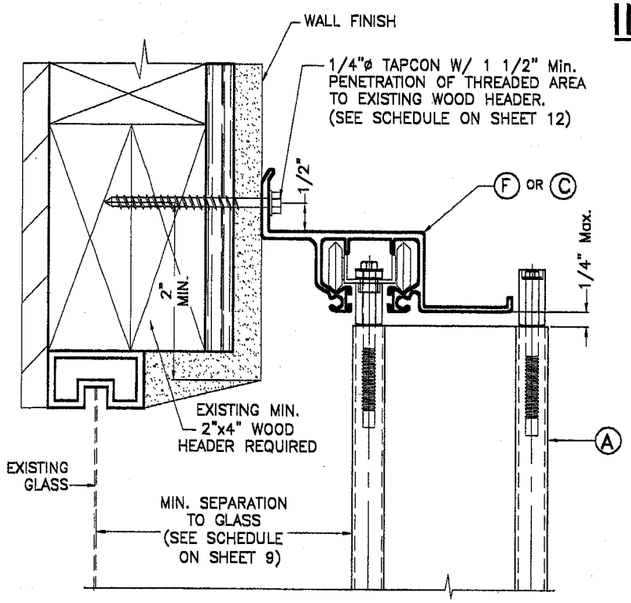

1W WALL CONNECTION AT TOP

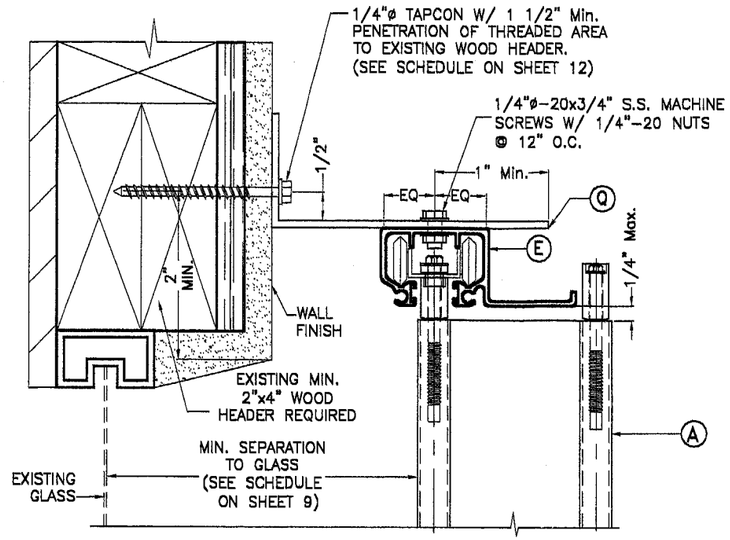

2W WALL CONNECTION AT TOP

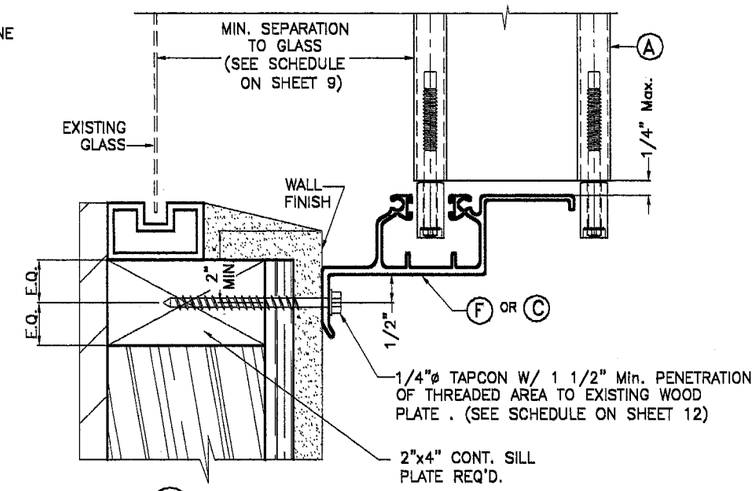

3W WALL CONNECTION AT BOTTOM

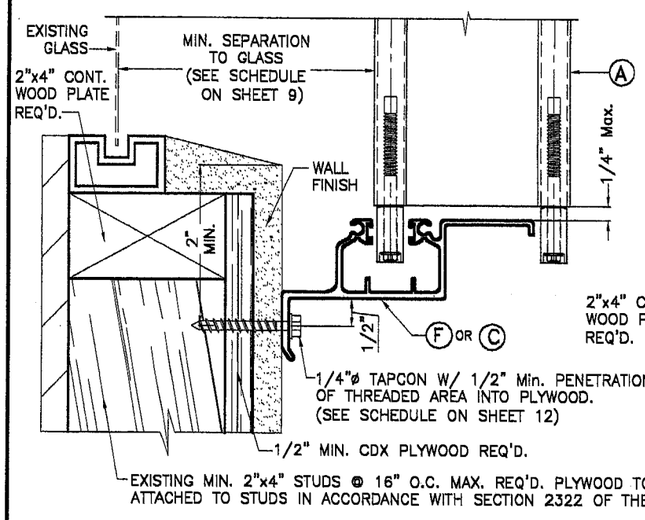

4W WALL CONNECTION AT BOTTOM

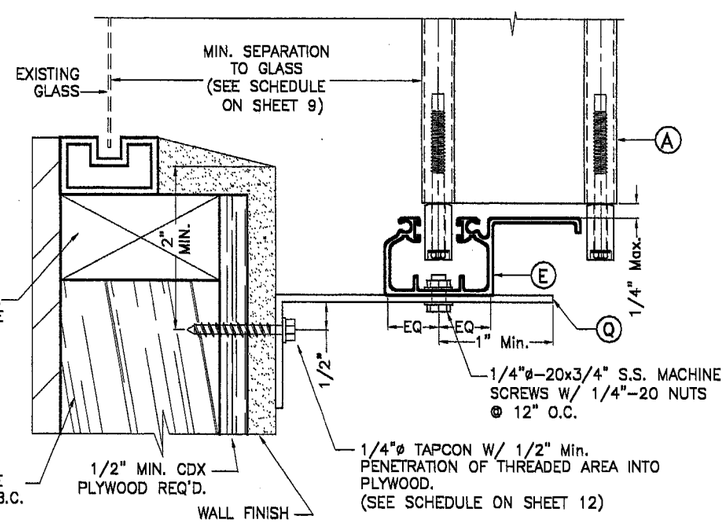

5W WALL CONNECTION AT BOTTOM

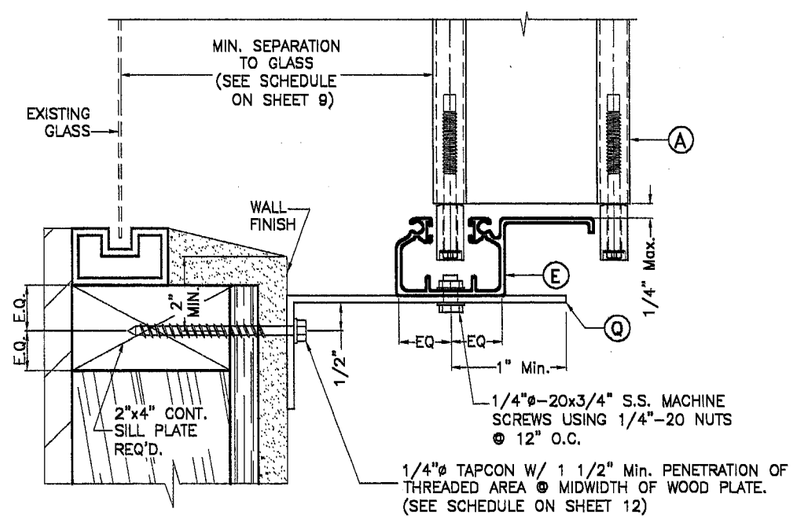

6W WALL CONNECTION AT BOTTOM

F.B.C.(**H.V.H.Z.**) MIAMI–DADE COUNTY

PRODUCT REVISED
as complying with the Florida Buiding Code
Acceptance No 05-0308.02
Expiration Date 06/01/2007
By Helmy H. Mehler
Miami Dade Product Control Division

MIAMI–DADE COUNTY

FEB 2 5 2005
P.E. SEAL/SIGNATURE/DATE

TILTECO INC.
TILLIT TESTING & ENGINEERING COMPANY
6355 N.W. 36th. St., Ste. 305, VIRGINIA GARDENS, FLORIDA 33166
Phone : (305)871–1530 . Fax : (305)871–1531
e–mail: tilteco@aol.com
EB–0006719
WALTER A. TILLIT Jr. P. E.
FLORIDA Lic. # 44167

ERNESTO RODRIGUEZ HURRICANE SHUTTER, INC.
(ASSA # 112)
5288 NW 72nd AVENUE
MIAMI, FL 33166
PHONE: (305)649–9993

© 2003 EASTERN METAL SUPPLY, INC.

BERTHA™ HIGH VELOCITY
ACCORDION SHUTTER SYSTEM

REV. No	DESCRIPTION	DATE
1	GENERAL	
2		
3		
4		
5		

SCALE: 3/8"=1"
DATE: 2/24/05
DRAWING No **05–034**
SHEET **13 OF 14**

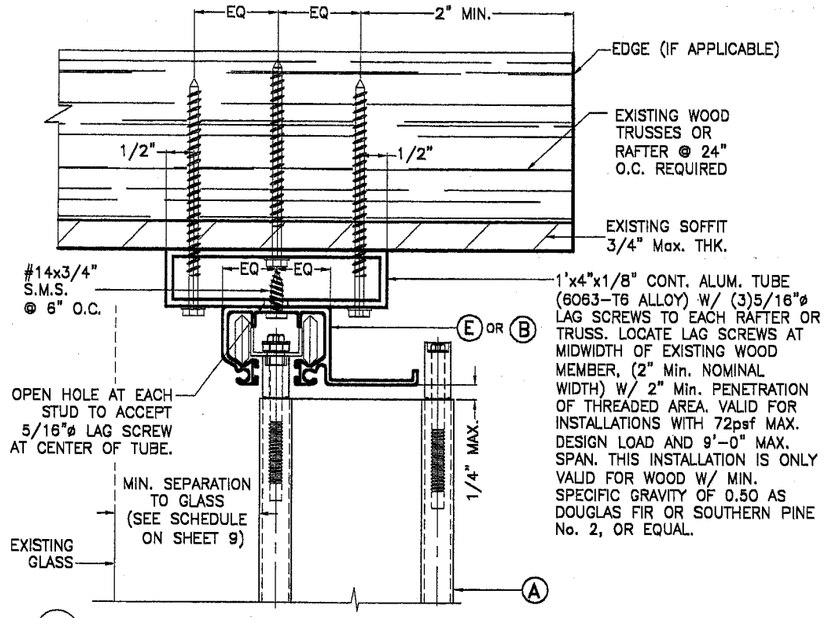

7W HOLLOW CEILING MOUNTING INSTALLATION

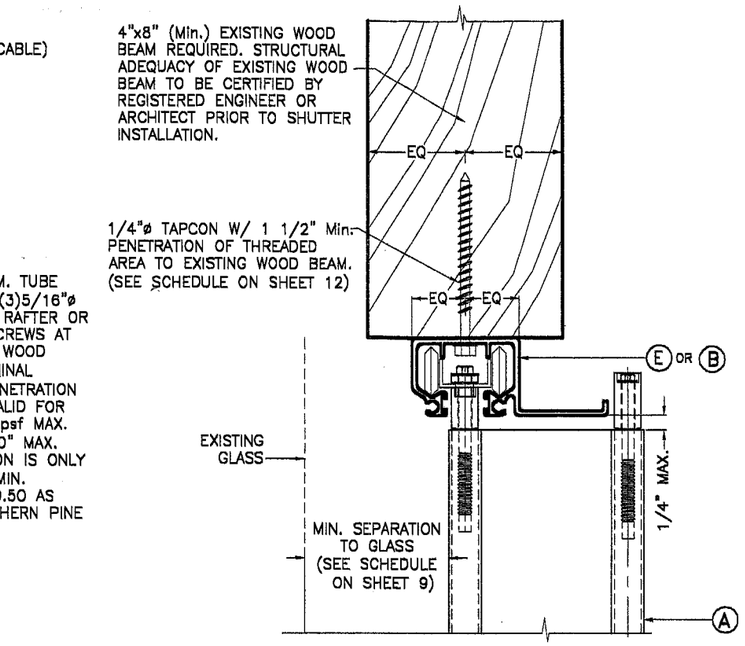

8W SOFFIT MOUNTING INSTALLATION

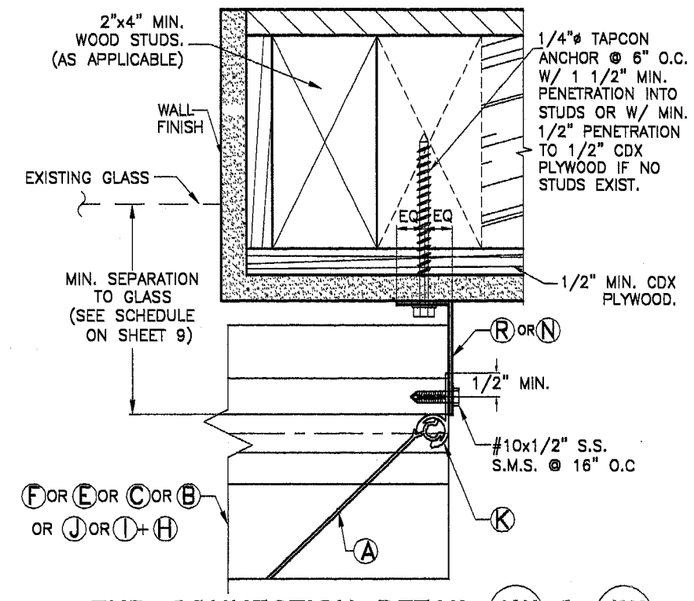

END CONNECTION DETAIL 1W & 4W

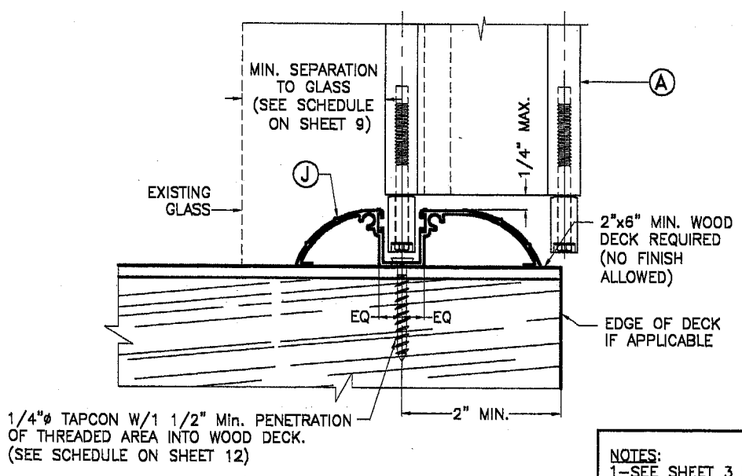

9W FLOOR CONNECTION

NOTES:
1-SEE SHEET 3 FOR TYPICAL SHUTTER ASSEMBLY
2-MOUNTING SECTIONS CAN BE COMBINED IN ANY WAY TO SUIT ANY INSTALLATION.

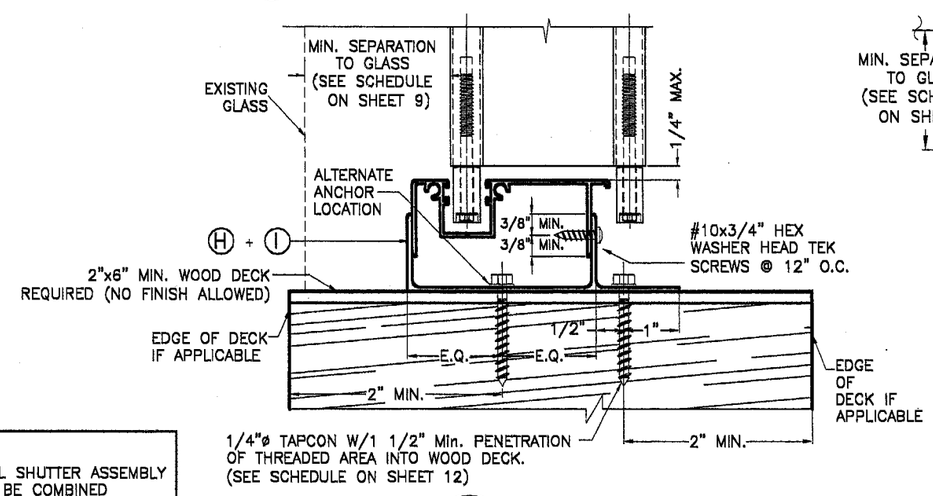

10W FLOOR CONNECTION

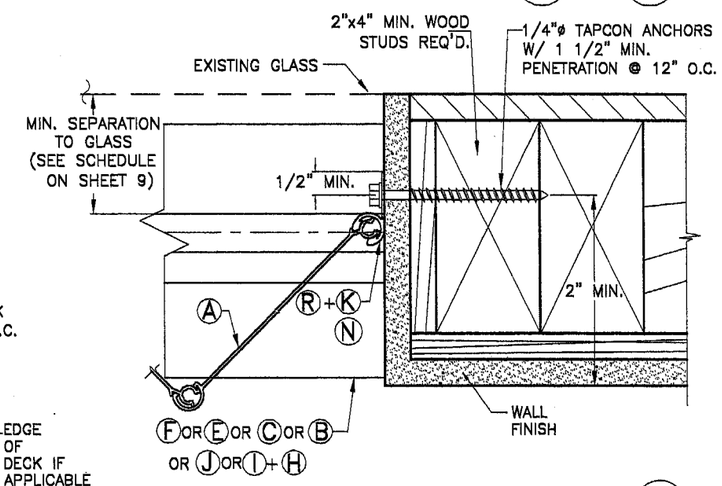

END CONNECTION DETAIL 5W

F.B.C.(**H.V.H.Z.**) MIAMI-DADE COUNTY

PRODUCT REVISED
as complying with the Florida Building Code
Acceptance No 05-0308.02
Expiration Date 06/01/2007
By Helena A. Melo
Miami Dade Product Control Division

MIAMI-DADE COUNTY

FEB 25 2005

P.E. SEAL/SIGNATURE/DATE

TILTECO INC.
TILLIT TESTING & ENGINEERING COMPANY
6355 N.W. 36th. St., Ste. 305, VIRGINIA GARDENS, FLORIDA 33166
Phone : (305)871-1530 . Fax : (305)871-1531
e-mail: tilteco@aol.com
EB-0006719
WALTER A. TILLIT Jr. P. E.
FLORIDA Lic. # 44167

ERNESTO RODRIGUEZ HURRICANE SHUTTER, INC.

(ASSA # 112)

5288 NW 72nd AVENUE
MIAMI, FL 33166
PHONE: (305)649-9993

© 2003 EASTERN METAL SUPPLY, INC.

BERTHA™ HIGH VELOCITY
ACCORDION SHUTTER SYSTEM

REV. No	DESCRIPTION	DATE
1	GENERAL	
2		
3		
4		
5		

SCALE: 3/8" = 1"
DATE: 2/24/05
DRAWING No **05-034**
SHEET **14 OF 14**