MIAMI-DADE COUNTY

BUILDING CODE COMPLIANCE OFFICE (BCCO)
PRODUCT CONTROL DIVISION

MIAMI-DADE COUNTY, FLORIDA
METRO-DADE FLAGLER BUILDING
140 WEST FLAGLER STREET, SUITE 1603
MIAMI, FLORIDA 33130-1563
(305) 375-2901 FAX (305) 375-2908
www.buildingcodeonline.com

NOTICE OF ACCEPTANCE (NOA)

United Enertech Corporation
P. O. Box 71659
3101 S. Orchard Knob Ave.
Chattanooga, TN 37407

SCOPE:

This NOA is being issued under the applicable rules and regulations governing the use of construction materials. The documentation submitted has been reviewed by Miami-Dade County Product Control Division and accepted by the Board of Rules and Appeals (BORA) to be used in Miami Dade County and other areas where allowed by the Authority Having Jurisdiction (AHJ).

This NOA shall not be valid after the expiration date stated below. The Miami-Dade County Product Control Division (In Miami Dade County) and/or the AHJ (in areas other than Miami Dade County) reserve the right to have this product or material tested for quality assurance purposes. If this product or material fails to perform in the accepted manner, the manufacturer will incur the expense of such testing and the AHJ may immediately revoke, modify, or suspend the use of such product or material within their jurisdiction. BORA reserves the right to revoke this acceptance, if it is determined by Miami-Dade County Product Control Division that this product or material fails to meet the requirements of the applicable building code.

This product is approved as described herein, and has been designed to comply with the Florida Building Code, including the High Velocity Hurricane Zone.

DESCRIPTION: VV-10 -D Aluminum Louver w/ or w/o CD-151 Damper Assembly

APPROVAL DOCUMENT: Drawing No "**05-021**", titled "VV-10-D Aluminum Louver w/ or w/o CD-151 Damper Assembly", sheets 1 through 7 of 7 prepared by Tilteco Inc., dated 02/09/05 without revisions, signed and sealed by W. A. Tillit Jr, P. E., bearing the Miami-Dade County Product Control Approval stamp with the Notice of Acceptance number and approval date by the Miami-Dade County Product Control Division.

MISSILE IMPACT RATING: Large and Small Missile Impact Resistant

LABELING: Each unit shall bear a permanent label with the manufacturer's name or logo, city, state and following statement: "Miami-Dade County Product Control Approved or MDCPCA", unless otherwise noted herein.

RENEWAL of this NOA shall be considered after a renewal application has been filed and there has been no change in the applicable building code negatively affecting the performance of this product.

TERMINATION of this NOA will occur after the expiration date or if there has been a revision or change in the materials, use, and/or manufacture of the product or process. Misuse of this NOA as an endorsement of any product, for sales, advertising or any other purposes shall automatically terminate this NOA. Failure to comply with any section of this NOA shall be cause for termination and removal of NOA.

ADVERTISEMENT: The NOA number preceded by the words Miami-Dade County, Florida, and followed by the expiration date may be displayed in advertising literature. If any portion of the NOA is displayed, then it shall be done in its entirety.

INSPECTION: A copy of this entire NOA shall be provided to the user by the manufacturer or its distributors and shall be available for inspection at the job site at the request of the Building Official.

This NOA consists of this page 1 and evidences page E-1, as well as approval document mentioned above.
The submitted documentation was reviewed by **Candido F. Font, P.E.**

08/18/05

PRODUCT CONTROL ACCEPTED

NOA No. 05-0314.02
Expiration Date: August 18, 2010
Approval Date: August 18, 2005

United Enertech Corporation.

NOTICE OF ACCEPTANCE: EVIDENCE SUBMITTED

A. DRAWINGS

1. Drawing No "**05-021**", titled "VV-10-D Aluminum Louver w/ or w/o CD-151 Damper Assembly", sheets 1 through 7 of 7 prepared by Tilteco Inc, dated 02/09/05 without revisions, signed and sealed by W. A. Tillit Jr. PE.

B. TESTS

1. Test report of Uniform Static Air Pressure Test per TAS 202-94, Large Missile Impact Test per TAS 201-94 and Cyclic Wind Pressure Loading per TAS 203-94 on 144" x 96" of aluminum louver system with damper prepared by American Test Lab of South Florida, Test Report No. **0203.01-05** dated 03/10/05 signed and sealed by W. R. Mehner PE and H. Hattem PE.
2. Test report of Wind Driven Rain Resistance per TAS (A) 95 on VV-10-D Louver w/ CD151 Parallel Blade Damper prepared by PRI Asphalt Technologies, Inc, Test Report PRI05014 dated 02/08/05 signed and sealed by C. L. Thomas PE.
3. Test report of Tensile Test per ASTM E-8 of 6 samples 0203.01-05 Spec AL, BL, CL, AD, BD & CD signed and sealed by F. E. Grate PE.

C. CALCULATIONS:

1. Structural calculations for anchoring method of louver assembly, prepared by Tilteco, Inc. pages 1 through 3, signed and sealed by W. A. Tillit Jr. PE on 02/28/05.

D. QUALITY ASSURANCE

1. Miami Dade Building Code Compliance Office (BCCO).

E. MATERIAL CERTIFICATIONS

1. None.

F. STATEMENTS

1. Letter of code compliance issued by Tilteco Inc. on 02/28/05, signed and sealed by W. A. Tillit Jr. P. E.
2. Letter of no financial interest issued by Tilteco, Inc. on 02/28/05 signed and sealed by W. A. Tillit Jr. PE.

08/18/05

Candido F. Font, P.E.
Senior Product Control Examiner
NOA No 05-0314.02
Expiration Date: August 18, 2010
Approval Date: August 18, 2005

GENERAL NOTES:

1.) ALUMINUM LOUVER SYSTEM W/ OR W/O DAMPER SHOWN ON THIS PRODUCT APPROVAL DOCUMENT (P.A.D.) HAS BEEN VERIFIED FOR COMPLIANCE IN ACCORDANCE WITH THE 2004 EDITION OF THE FLORIDA BUILDING CODE.
THIS ALUMINUM LOUVER SYSTEM W/ OR W/O DAMPER MAY BE INSTALLED AT HIGH VELOCITY HURRICANE ZONES.
DESIGN WIND LOADS SHALL BE DETERMINED AS PER SECTION 1620 OF THE ABOVE MENTIONED CODE.
ALUMINUM LOUVER SYSTEM W/ OR W/O DAMPER'S ADEQUACY FOR IMPACT AND FATIGUE RESISTANCE HAS BEEN VERIFIED IN ACCORDANCE WITH SECTION 1609.1.4 OF THE ABOVE MENTIONED CODE AS PER AMERICAN TESTING LAB REPORT #0203.01-05, AS PER TAS-201, TAS-202, TAS-203, & PRI TECHNOLOGIES LAB REPORT #UEC-001-02-01, PER TAS-100A (WIND DRIVEN RAIN)

DESIGN PRESSURE RATING:
+150, -150 psf.

2.) ALL ALUMINUM EXTRUSIONS SHALL BE 6063-T5 ALLOY W/ MIN. SPECIFIC YIELD STRENGTHS AS SHOWN ON SHEET 2.

3.) ALL SCREWS TO BE STAINLESS STEEL 304 OR 316 SERIES WITH 50 ksi YIELD POINT AND 90 ksi TENSILE STRENGTH OR CORROSION RESISTANT CARBON STEEL AS PER DIN 50018.

4.) ALL WELDING OF ALUMINUM FRAMING SHALL BE IN ACCORDANCE WITH THE AMERICAN WELDING SOCIETY A.W.S. D.1.2 2004 EDITION REGULATIONS. USE CERTIFIED WELDERS. USE ER-5356 ELECTRODES.

5.) ANCHORS TO EXISTING STRUCTURE SHALL BE AS FOLLOWS:

(A) ANCHORS SHALL BE INSTALLED FOLLOWING ALL OF THE RECOMMENDATIONS AND SPECIFICATIONS OF THE ANCHOR'S MANUFACTURER.

ANCHOR TYPE	MANUFACTURER	DIAMETER OR GAGE	MIN. EMBEDMENT				MIN. EDGE DISTANCE (E.D)		
			TO CONCRETE (f'c=3320 psi) MIN.	TO CONCRETE BLOCK (C-90 UNIT)	TO 1/8" MIN. STEEL Fy=33 ksi (MIN.)	TO WOOD (G ≥ 0.55)	CONCRETE OR CONCRETE BLOCK	STEEL	WOOD
TAPCONS	ELCO TEXTRON	1/4"	1-3/4"	1-1/4"	N/A	N/A	3"	N/A	N/A
TEK SCREWS	ITW/ BUILDEX	#14	N/A	N/A	3/4"	N/A	N/A	1"	N/A
TAPCONS	ITW/ BUILDEX	1/4"	N/A	N/A	N/A	1 1/2"	N/A	N/A	2"

6.) LOUVER SYSTEM W/O DAMPER SHALL ONLY BE INSTALLED IN A LOCATION WHERE THE ROOM BEHIND THE LOUVER IS DESIGNED TO DRAIN WATER PENETRATING INTO THE ROOM, AND THE ROOM WILL HOUSE WATER RESISTANT/WATER PROOF EQUIPMENT, COMPONENTS, OR SUPPLIES.

7.) LOUVER SYSTEM W/DAMPER MAY BE INSTALLED IN LOCATIONS WHERE THE ROOM BEHIND THE LOUVER IS NOT DESIGNED TO DRAIN WATER PENETRATING INTO THE ROOM, OR THE ROOM WILL HOUSE NON-WATER RESISTANT EQUIPMENT, COMPONENTS, OR SUPPLIES. INSTALLATION ON LOUVER W/ DAMPER IS LIMITED TO 40 FT IN HEIGHT ACCORDING TO TABLE 3 OF TAS 100(A)-95.

8.) CD-151 DAMPER IS AN OPERABLE ASSEMBLY.
IT MAY BE OPERATED BY MEANS OF A HAND QUADRANT HANDLE MECHANISM (AS SHOWN ON SHEET 7) OR THROUGH AN ELECTRICAL OR PNEUMATIC ACTUATOR.
DAMPER'S OPERATIVE MECHANISM IS NOT PART OF THIS APPROVAL, BUT SHALL BE CERTIFIED BY AN INDEPENDENT TESTING AGENCY.

9. ALL ALUMINUM IN CONTACT W/DISSIMILAR MATERIALS MUST BE PAINTED PER SECTIONS 2003.8.4.2, 2003.8.4.4, 2003.8.4.5 AND 2003.8.4.6 OF THE FLORIDA BUILDING CODE AS APPLICABLE.

10.) IT SHALL BE RESPONSIBILITY OF THE CONTRACTOR TO VERIFY THE SOUNDNESS OF THE STRUCTURE WHERE LOUVER SYSTEM IS TO BE ATTACHED TO INSURE PROPER ANCHORAGE.

11.) (a) THIS PRODUCT APPROVAL DOCUMENT (P.A.D.) PREPARED BY THIS ENGINEER IS GENERIC AND DOES NOT PROVIDE INFORMATION FOR A SPECIFIC PROJECT; i.e. WHERE THE SITE CONDITIONS DEVIATE FROM THE P.A.D.
(b) CONTRACTOR TO BE RESPONSIBLE FOR THE SELECTION, PURCHASE AND INSTALLATION INCLUDING LIFE SAFETY OF THIS PRODUCT, BASED ON THIS P.A.D., PROVIDED HE/SHE DOES NOT DEVIATE FROM THE CONDITIONS DETAILED ON THIS DOCUMENT.
CONSTRUCTION SAFETY AT SITE IS THE CONTRACTOR'S RESPONSIBILITY.

(c) THIS PRODUCT APPROVAL DOCUMENT WILL BE CONSIDERED INVALID IF MODIFIED.

(D) SITE SPECIFIC PROJECTS SHALL BE PREPARED BY A FLORIDA REGISTERED ENGINEER OR ARCHITECT WHICH WILL BECOME THE ENGINEER OF RECORD (E.O.R.) FOR THE PROJECT AND WHO WILL BE RESPONSIBLE FOR THE PROPER USE OF THE P.A.D.

(E) THIS P.A.D. SHALL COMPLY WITH SECTION 2: 61G15 OF THE FLORIDA ADMINISTRATIVE CODE.

12.) LOUVER'S MANUFACTURER LABEL SHALL BE PLACED ON A READILY VISIBLE LOCATION.
ONE LABEL SHALL BE PLACED FOR EVERY OPENING AND SHALL READ AS FOLLOWS:
UNITED ENERTECH, INC.
CHATTANOOGA, TN
MIAMI-DADE COUNTY PRODUCT CONTROL APPROVED.

F.B.C. (High Velocity Hurricane Zone)

Approved as complying with the Florida Building Code
Date 08/18/05
NOA# 05-0614.02
Miami Dade Product Control Division
By

MIAMI-DADE COUNTY

6/7/05

P.E. SEAL/SIGNATURE/DATE

TILTECO INC.
TILLIT TESTING & ENGINEERING COMPANY
6355 N.W. 36th. St., Ste. 305, VIRGINIA GARDENS, FL 33166
Phone : (305)871-1530 . Fax : (305)871-1531
EB-0006719
WALTER A. TILLIT Jr. P. E.
FLORIDA Lic. # 44167

VV-10-D ALUMINUM LOUVER W/ OR W/O CD-151 DAMPER ASSEMBLY

United Enertech
3101 S. Orchard Knob Ave.
Chattanooga, TN 37407
Telephone:(423)698-7715

REV. No	DESCRIPTION	DATE	REV. No	DESCRIPTION	DATE
1	-	-	3		
2	-	-	4		

AS SHOWN
SCALE

2/9/05
DATE

05-021
DRAWING No

SHEET 1 OF 7

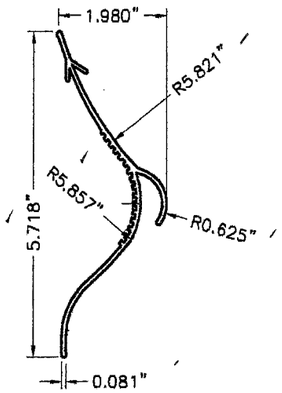

1L VERTICAL BLADE

MATERIAL:
(6063-T5 ALUMINUM ALLOY)
Fy(MIN.)=31.6 ksi

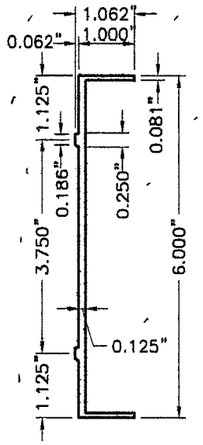

2L JAMB & HEAD

MATERIAL:
(6063-T5 ALUMINUM ALLOY)
Fy(MIN.)=25.3 ksi

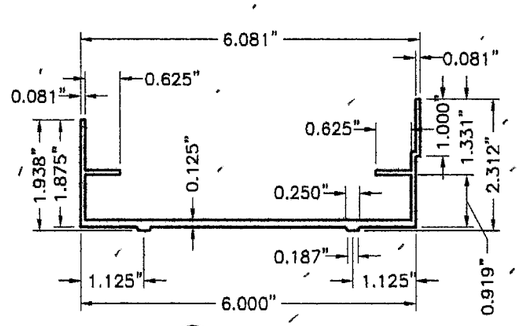

3L SILL

MATERIAL:
(6063-T5 ALUMINUM ALLOY)
Fy(MIN.)=32.7 ksi

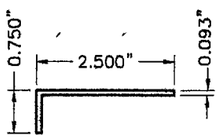

4L 1ST BLADE BLANK-OFF

MATERIAL:
FORMED ALUMINUM
(6063-T5 ALUMINUM ALLOY)

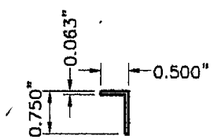

5L BLADE'S SPACER

MATERIAL:
(6063-T5 ALUMINUM ALLOY)

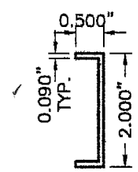

6L ALUM. CHANNEL

MATERIAL:
FORMED ALUMINUM
(6063-T5 ALUMINUM ALLOY)

7L BLANK-OFF PANEL

3 3/4" X .093" CONT ALUM. PLATE
(6063-T5 ALUMINUM ALLOY)

8L BLANK-OFF PANEL

3 1/8" X .093" CONT ALUM. PLATE
(6063-T5 ALUMINUM ALLOY)

9L COVER STRIP

2" X 1/8" X 92" MAX. ALUM. PLATE
(6063-T5 ALUMINUM ALLOY)

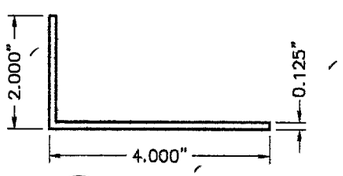

10L TOP & BOTTOM ALUM. ANGLE

MATERIAL:
(6063-T5 ALUMINUM ALLOY)

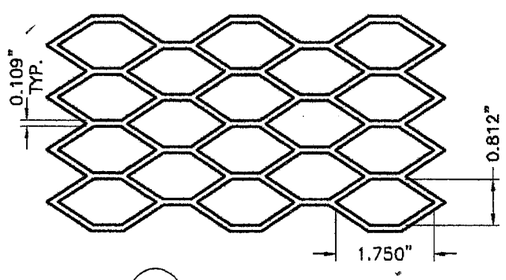

11L REAR MESH

MATERIAL:
NOMINAL 3/4"x0.050" THICK (0.17 lb/SQ. Ft)
(3003-H14 ALUMINUM ALLOY)

W-10D LOUVER COMPONENTS

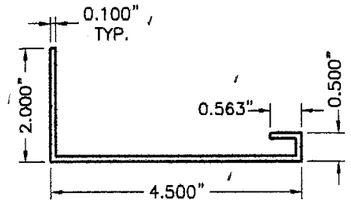

1D HEAD & SILL

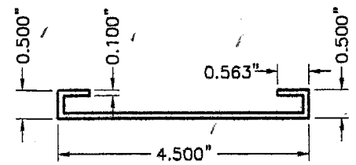

7D MID-HEIGHT HEAD or SILL

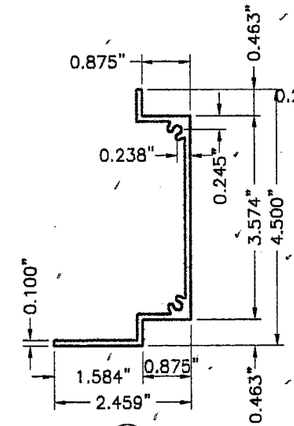

2D JAMB

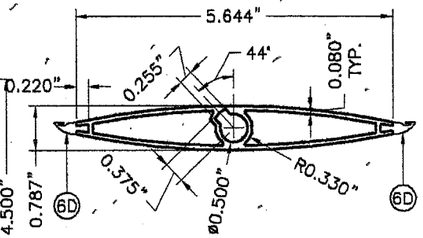

3D DAMPER BLADE

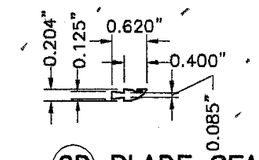

6D BLADE SEAL

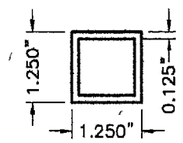

1I INTERMEDIATE TUBE FRAME

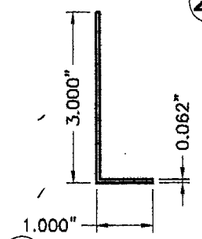

8D ALUM. ANGLE BLADE STOP

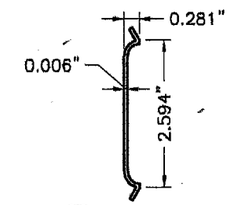

9D JAMB SEAL

CD-151 DAMPER AND INTERMEDIATE TUBE FRAME COMPONENTS

(EXCLUDES COMPONENTS FOR OPERATIVE MECHANISM, SEE NOTE 8/1)

BILL OF MATERIALS

ITEM	DESCRIPTION	MATERIAL	SIZE	REMARKS
1D	EXTRUDED ALUM HEAD & SILL	6063-T5 ALUMINUM ALLOY	SEE DETAIL	Fy(MIN.)=33.4 ksi
2D	EXTRUDED ALUM JAMB	6063-T5 ALUMINUM ALLOY	SEE DETAIL	Fy(MIN.)=31.6 ksi
3D	EXTRUDED ALUM DAMPER BLADE.	6063-T5 ALUMINUM ALLOY	SEE DETAIL	Fy(MIN.)=31.8 ksi
4D	BUSHING	BRONZE	1/2" I.D.(5/8" O.D.)x1/4"	0.059"THICK @ WASHER SIDE
5D	AXLE PIN	ZAMAC No. 3 ZINC	1/2"x3 1/8"	WITH NYLON WASHER & LOCK RING
6D	BLADE SEAL	SILICONE	SEE DETAIL	ASTM D-2000, 60-65 DUROMETER
7D	MID-HEIGHT EXTRUDED ALUM. HEAD or SILL	6063-T5 ALUMINUM ALLOY	SEE DETAIL	Fy(MIN.)=29.8 ksi
8D	ALUM. ANGLE BLADE STOP	6063-T5 ALUMINUM ALLOY	SEE DETAIL	WITH VINYL WEATHER STRIP AT END OF 3" LEG
9D	JAMB SEAL	STAINLESS STEEL 316 SERIES	SEE DETAIL	ATTACHED TO 2D W/(3) DOUBLE SIDED (1"x1/8") TAPES
10D	S.D.S. TEK SCREW	ZINC PLATED	#8 X 1/2"	FASTEN TO 8D @ 12" O.C., 2 1/2" FROM ENDS
11	INTERMEDIATE TUBE FRAME	6063-T5 ALUMINUM ALLOY	SEE DETAIL THIS SHEET AND SHEET 5.	Fy(MIN.)=31.9 ksi INSTALL BETWEEN DAMPER & LOUVER FRAME.

F.B.C. (High Velocity Hurricane Zone)

Approved as complying with the Florida Building Code
Date 08/18/05
NOA# 05-0314.02
Miami Dade Product Control Division
By

MIAMI-DADE COUNTY

6/7/05

P.E. SEAL/SIGNATURE/DATE

TILTECO INC.
TILLIT TESTING & ENGINEERING COMPANY
6355 N.W. 36th. St., Ste. 305, VIRGINIA GARDENS, Fl. 33166
Phone : (305)871-1530 , Fax : (305)871-1531
EB-0006719
WALTER A. TILLIT Jr. P. E.
FLORIDA Lic. # 44167

W-10-D ALUMINUM LOUVER W/ OR W/O CD-151 DAMPER ASSEMBLY

United Enertech
3101 S. Orchard Knob Ave.
Chattanooga, TN 37407
Telephone:(423)698-7715

REV. No	DESCRIPTION	DATE	REV. No	DESCRIPTION	DATE
1	–	–	3		
2	–	–	4		

AS SHOWN SCALE

2/9/05 DATE

05-021 DRAWING No

SHEET 2 OF 7

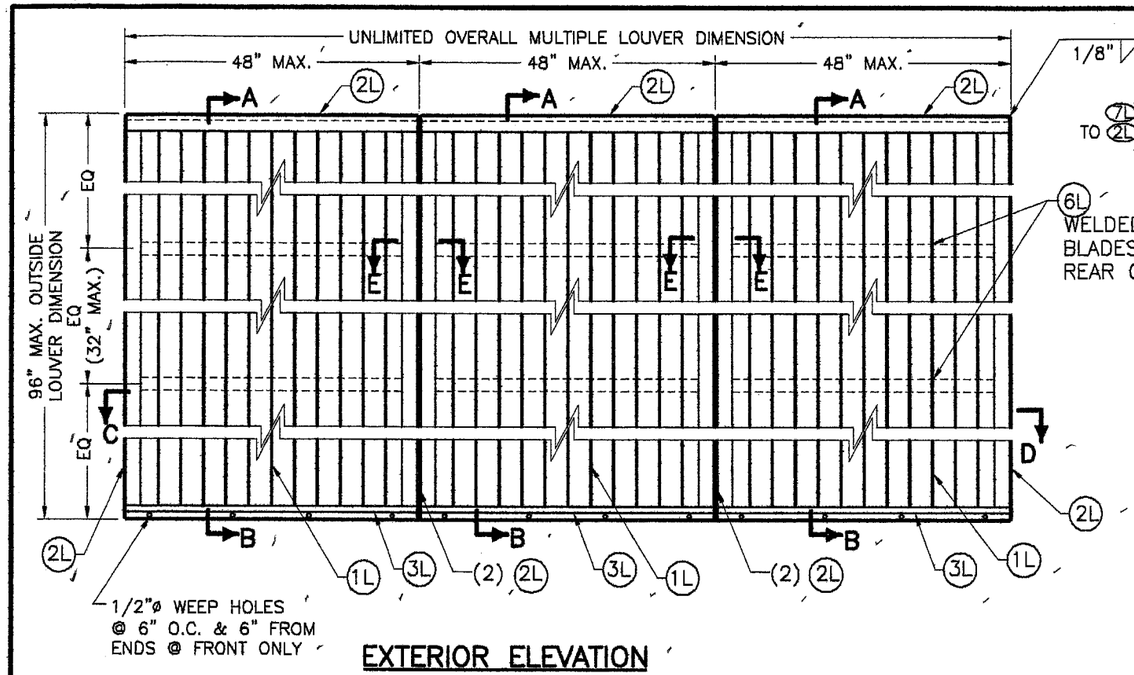

EXTERIOR ELEVATION
SCALE: 1/2"=1'-0"

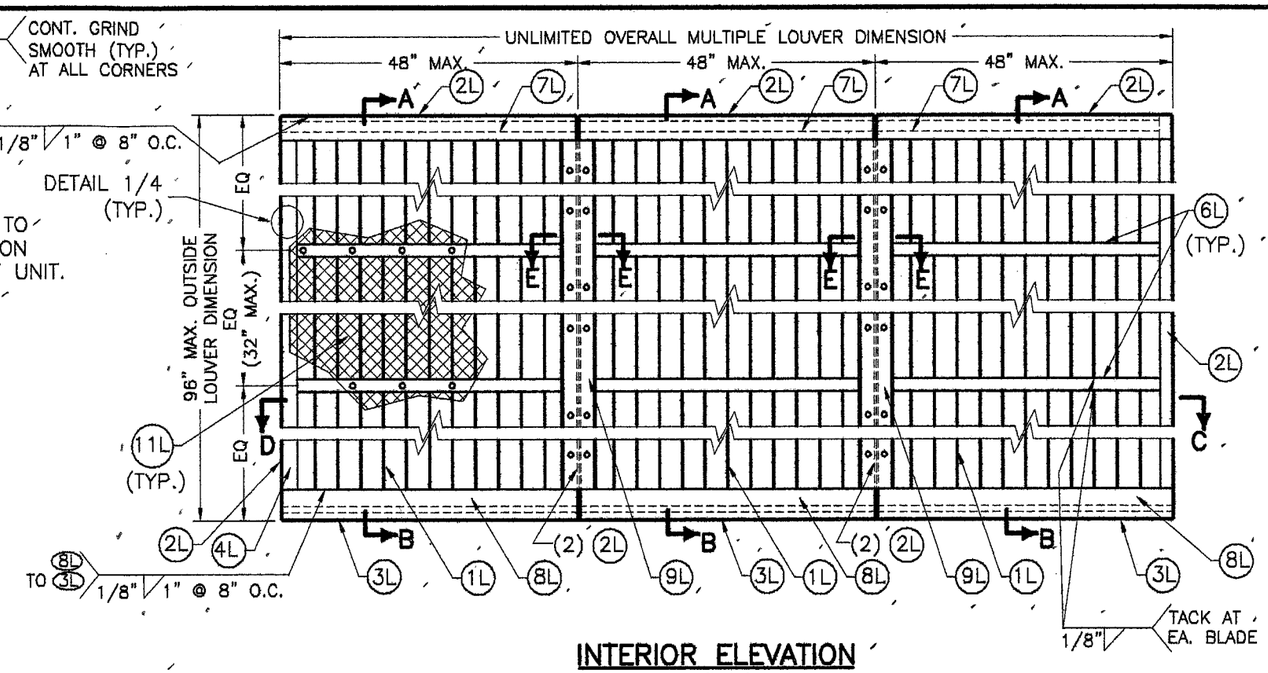

INTERIOR ELEVATION
SCALE: 1/2"=1'-0"

MULTIPLE W-10D LOUVER UNITS

NOTES: (1) SEE COMPONENTS ON SHEET 2.
(2) SEE SECTIONS A THRU D ON SHEET 4.

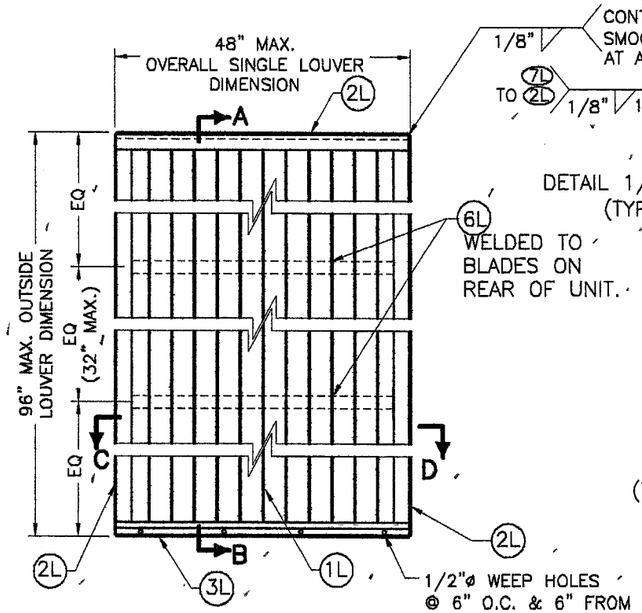

EXTERIOR ELEVATION
SCALE: 1/2"=1'-0"

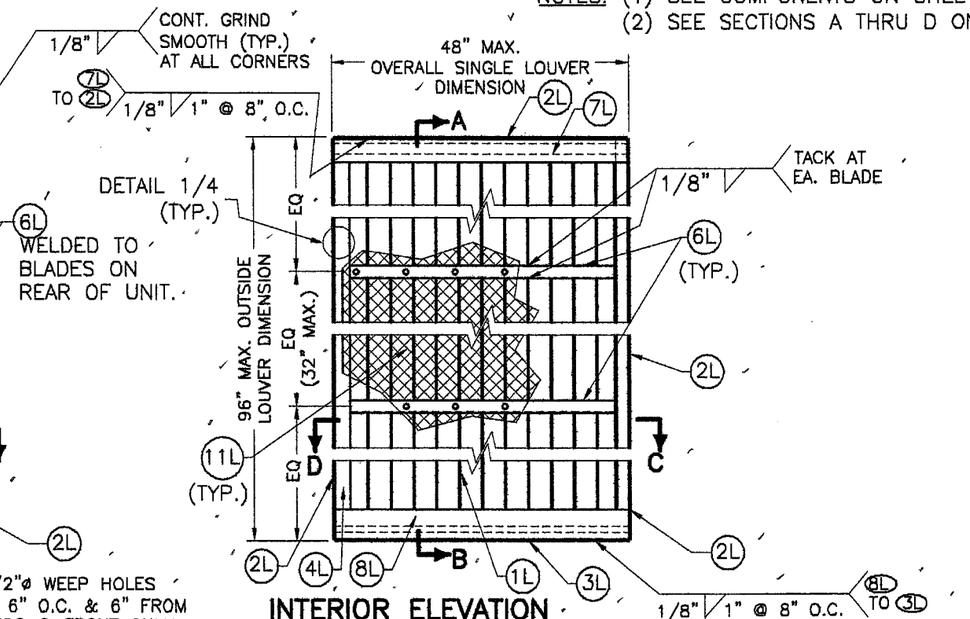

INTERIOR ELEVATION
SCALE: 1/2"=1'-0"

SINGLE W-10D LOUVER UNITS

NOTES: (1) SEE COMPONENTS ON SHEET 2.
(2) SEE SECTIONS A THRU D ON SHEET 4.

F.B.C. (High Velocity Hurricane Zone)

Approved as complying with the Florida Building Code
Date 06/18/05
NOA# 05-0314.02
Miami Dade Product Control Division
By

MIAMI-DADE COUNTY

6/7/05

P.E. SEAL/SIGNATURE/DATE

TILTECO INC.
TILLIT TESTING & ENGINEERING COMPANY
6355 N.W. 36th. St., Ste. 305, VIRGINIA GARDENS, Fl. 33166
Phone : (305)871-1530 . Fax : (305)871-1531
EB-0006719
WALTER A. TILLIT Jr. P. E.
FLORIDA Lic. # 44167

W-10-D ALUMINUM LOUVER W/ OR W/O CD-151 DAMPER ASSEMBLY

United Enertech
3101 S. Orchard Knob Ave.
Chattanooga, TN 37407
Telephone:(423)698-7715

REV. No	DESCRIPTION	DATE	REV. No	DESCRIPTION	DATE
1	-	-	3		
2	-	-	4		

AS SHOWN SCALE

2/9/05 DATE

05-021 DRAWING No

SHEET 3 OF 7

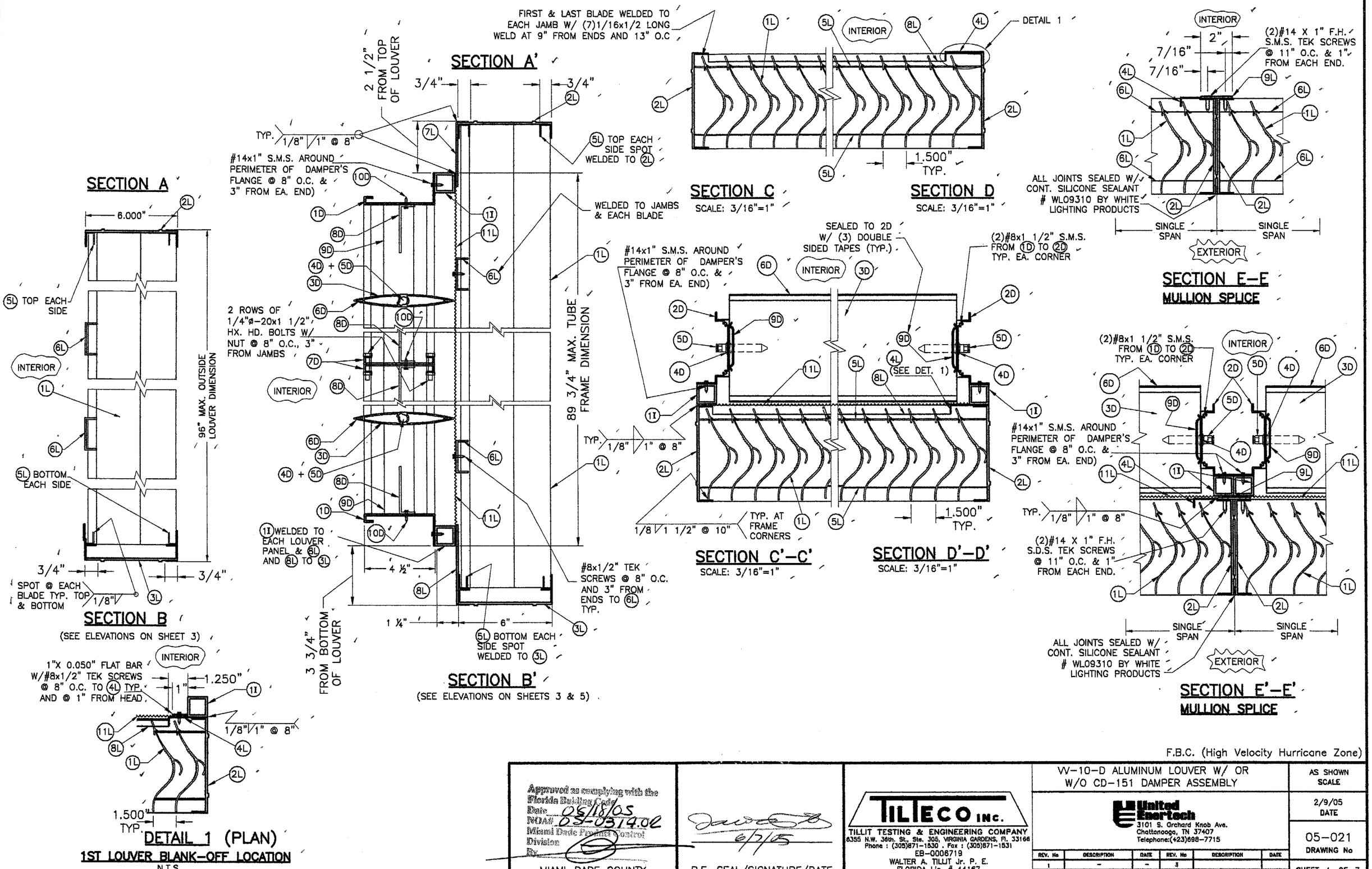

F.B.C. (High Velocity Hurricane Zone)

Approved as complying with the Florida Building Code
Date 06/18/05
NOA# 03-0314.02
Miami Dade Product Control Division
By

MIAMI-DADE COUNTY

6/7/05

P.E. SEAL/SIGNATURE/DATE

TILTECO INC.
TILLIT TESTING & ENGINEERING COMPANY
6355 N.W. 36th. St., Ste. 305, VIRGINIA GARDENS, Fl. 33166
Phone : (305)871-1530 . Fax : (305)871-1531
EB-0006719
WALTER A. TILLIT Jr. P. E.
FLORIDA Lic. # 44167

VV-10-D ALUMINUM LOUVER W/ OR W/O CD-151 DAMPER ASSEMBLY

United Enertech
3101 S. Orchard Knob Ave.
Chattanooga, TN 37407
Telephone:(423)698-7715

REV. No	DESCRIPTION	DATE	REV. No	DESCRIPTION	DATE
1	-	-	3		
2	-	-	4		

AS SHOWN
SCALE

2/9/05
DATE

05-021
DRAWING No

SHEET 4 OF 7

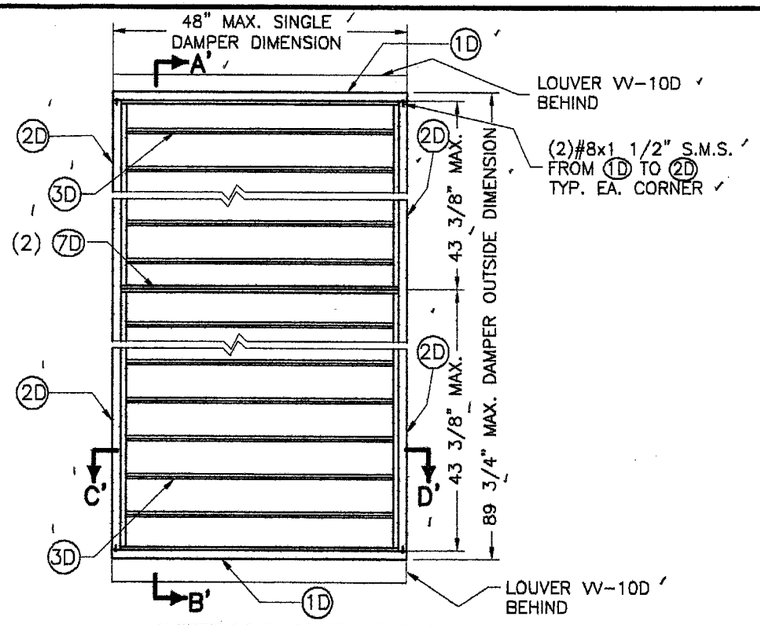

INTERIOR ELEVATION

CD-151 DAMPER SINGLE UNITS

SCALE: 1/2"=1'-0"

(1) SEE COMPONENTS ON SHEET 2.
(2) SEE SECTIONS A' THRU D' ON SHEET 4.

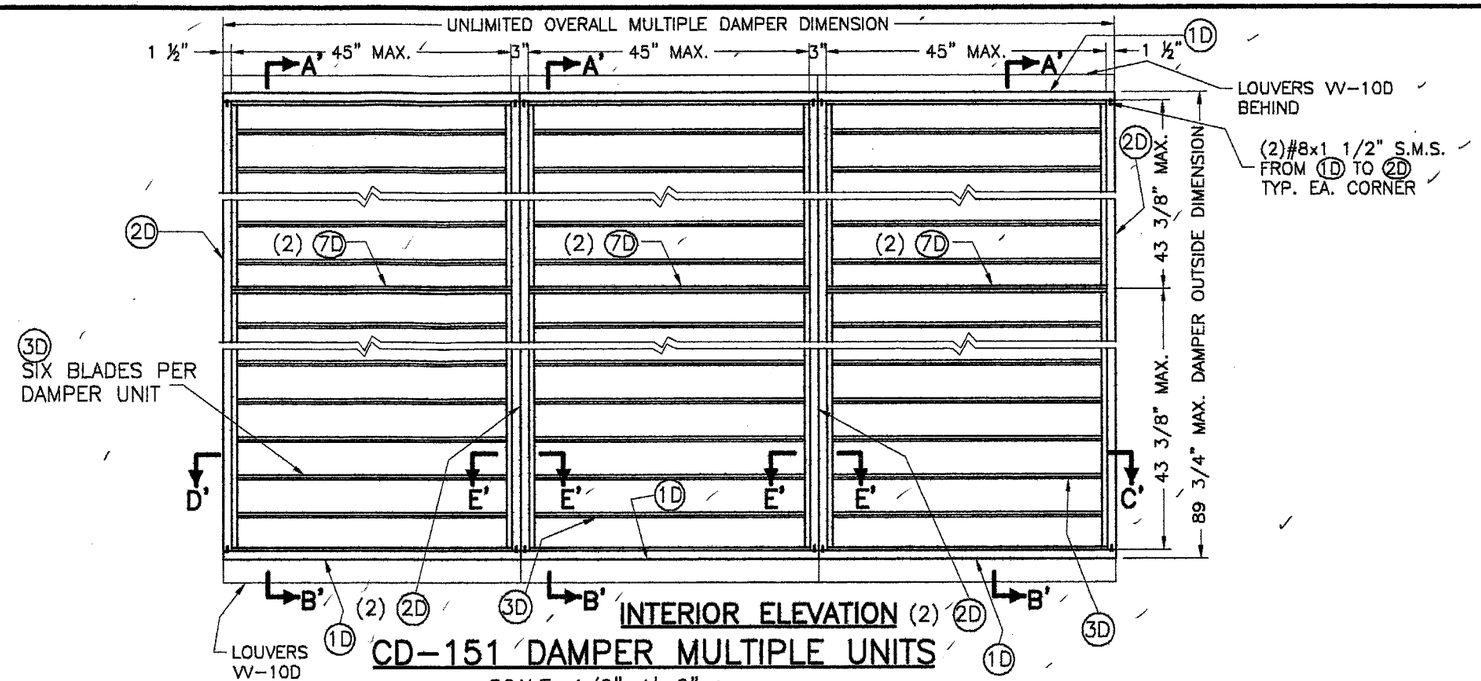

INTERIOR ELEVATION

CD-151 DAMPER MULTIPLE UNITS

SCALE: 1/2"=1'-0"

(1) SEE COMPONENTS ON SHEET 2.
(2) SEE SECTIONS A' THRU D' ON SHEET 4.

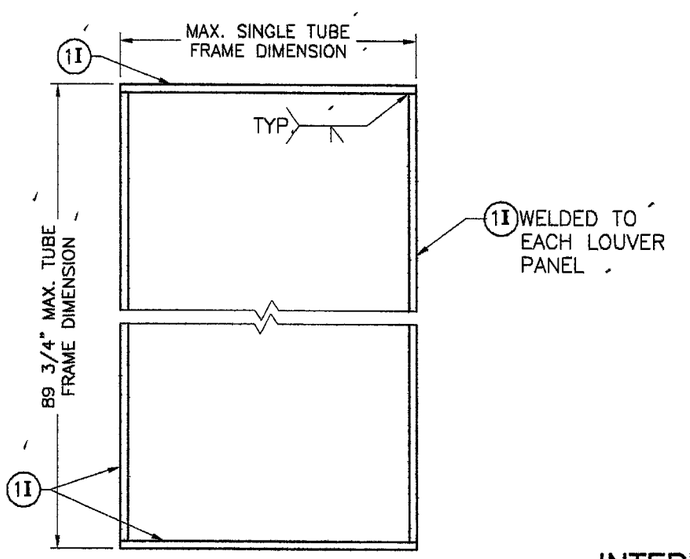

ELEVATION

INTERMEDIATE TUBE FRAME FOR CD-151 DAMPER ATTACHMENT AT SINGLE UNITS

SCALE: 1/2"=1'-0"

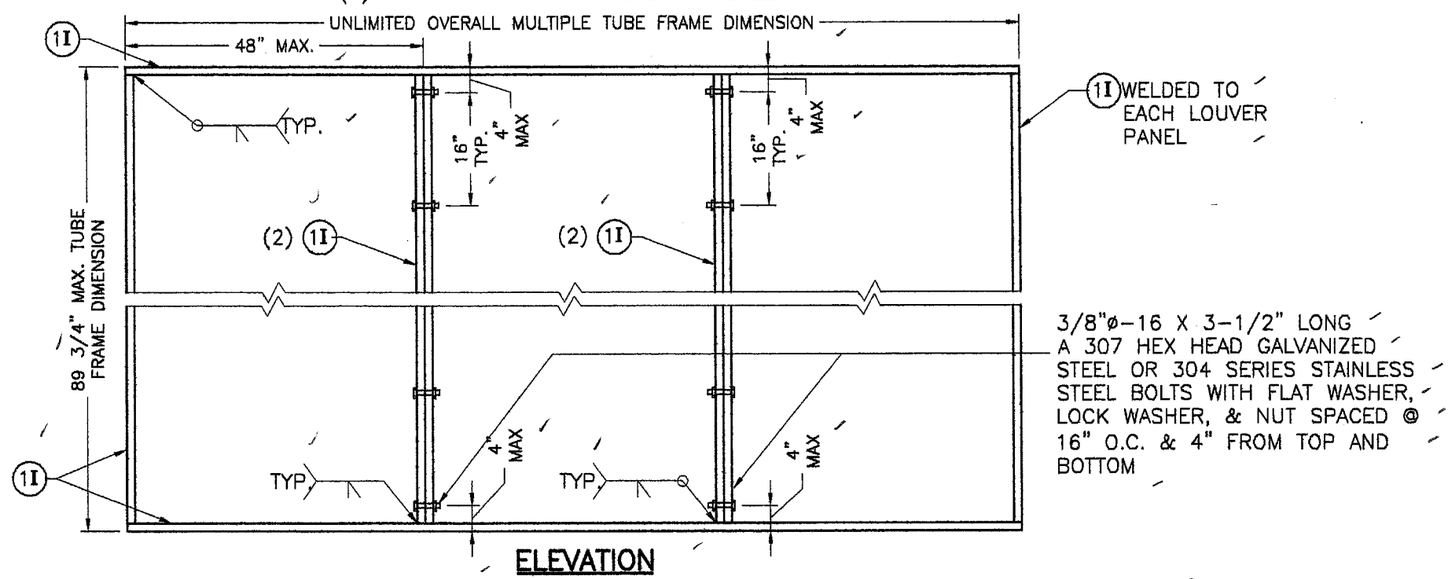

ELEVATION

INTERMEDIATE TUBE FRAME FOR CD-151 DAMPER ATTACHMENT AT MULTIPLE UNITS

F.B.C. (High Velocity Hurricane Zone)

SCALE: 1/2"=1'-0"

Approved as complying with the Florida Building Code
Date 02/18/05
NOA# 05-0314.02
Miami Dade Product Control Division
By

MIAMI-DADE COUNTY

6/7/05

P.E. SEAL/SIGNATURE/DATE

TILTECO INC.
TILLIT TESTING & ENGINEERING COMPANY
6355 N.W. 36th. St., Ste. 305, VIRGINIA GARDENS, Fl. 33166
Phone : (305)871-1530 . Fax : (305)871-1531
EB-0006719
WALTER A. TILLIT Jr. P. E.
FLORIDA Lic. # 44167

W-10-D ALUMINUM LOUVER W/ OR W/O CD-151 DAMPER ASSEMBLY

United EnerTech
3101 S. Orchard Knob Ave.
Chattanooga, TN 37407
Telephone:(423)698-7715

REV. No	DESCRIPTION	DATE	REV. No	DESCRIPTION	DATE
1	-	-	3		
2	-	-	4		

AS SHOWN SCALE

2/9/05 DATE

05-021 DRAWING No

SHEET 5 OF 7

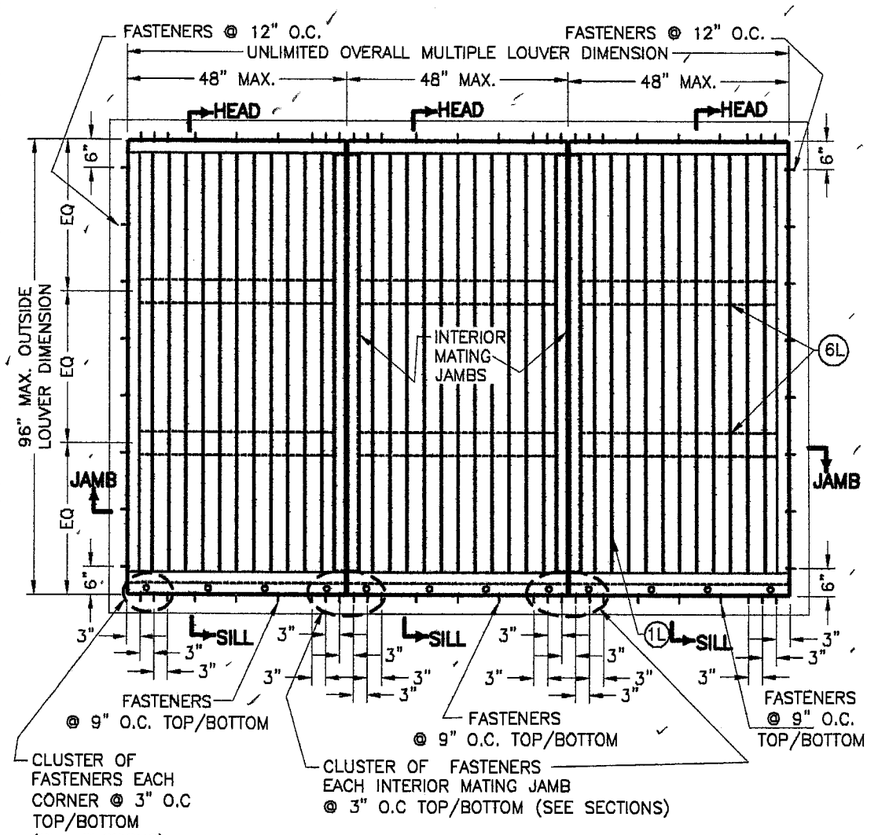

FASTENERS SPACING ELEVATIONS

(SEE FASTENERS SPECS ON GENERAL NOTE 5/1)

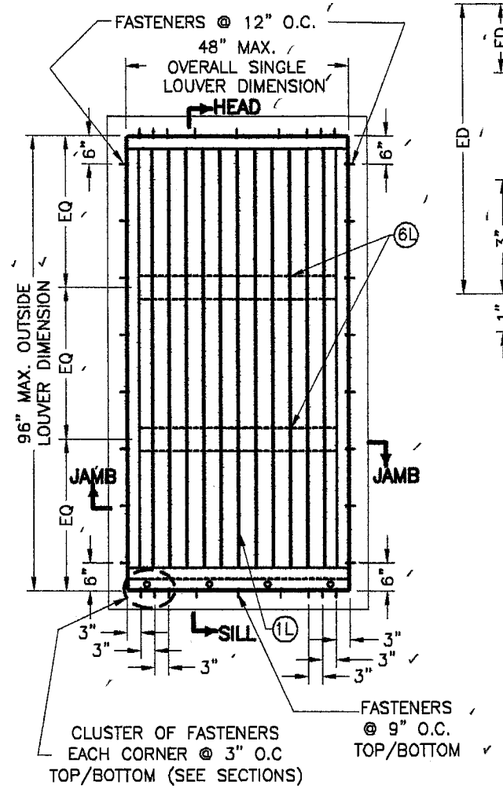

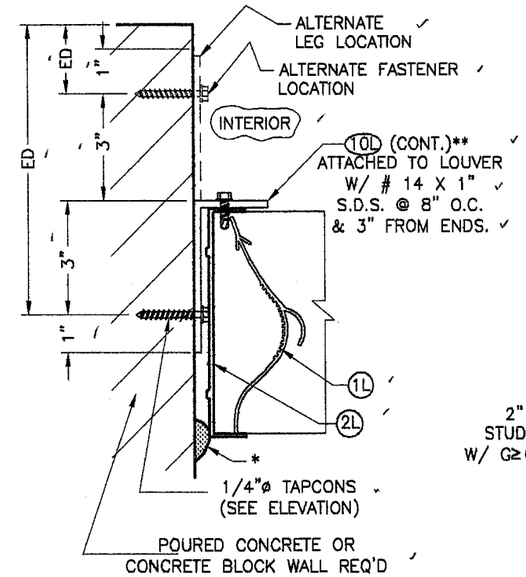

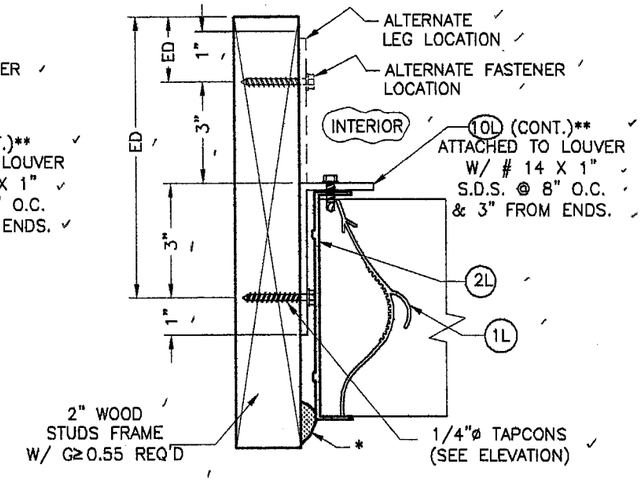

TYP. JAMB SECTIONS

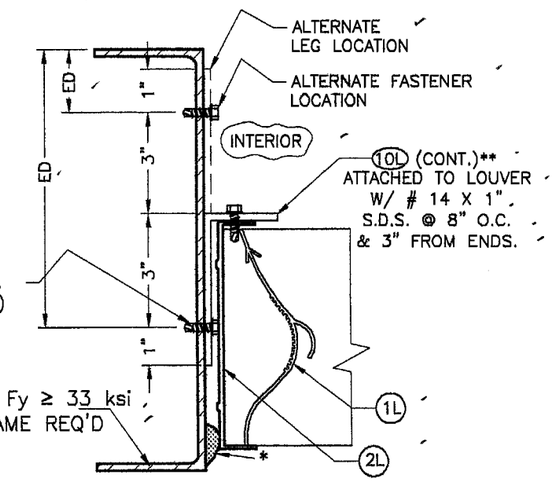

* 1/4" MAX. SHIM SPACE. PROVIDE CONT. SEALANT AT SHIM SPACE.

** SEE GENERAL NOTE 9/1

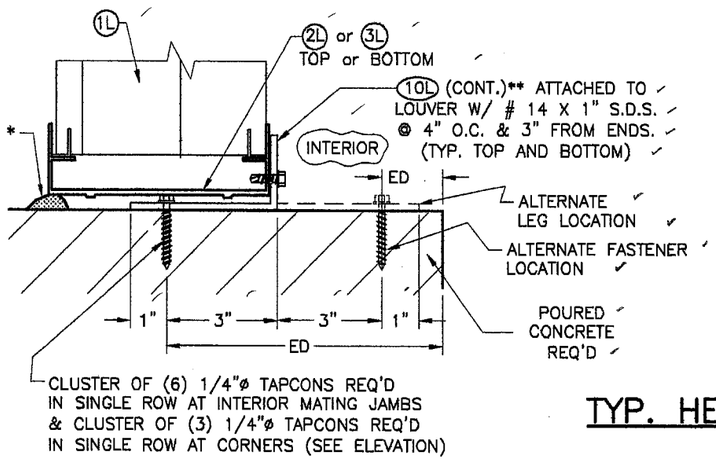

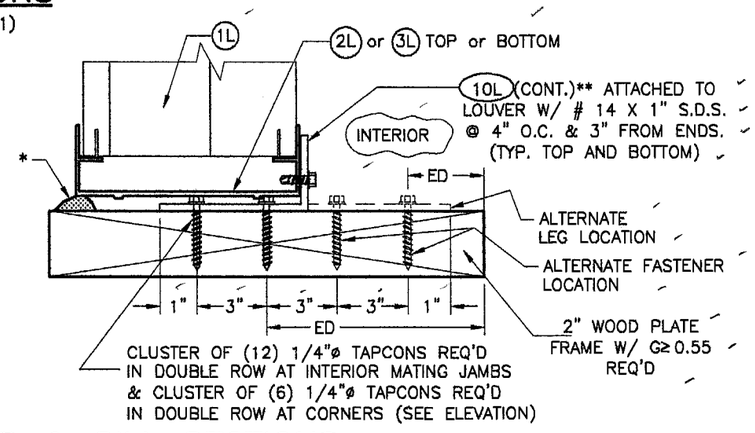

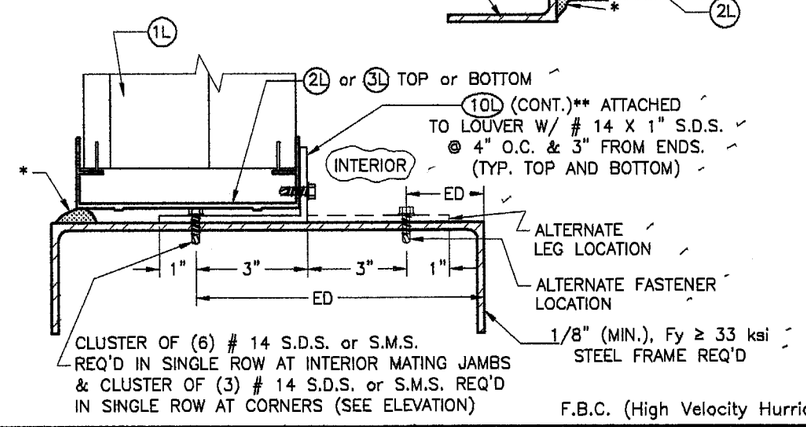

TYP. HEAD & SILL SECTIONS

F.B.C. (High Velocity Hurricane Zone)

ED= EDGE DISTANCE, SEE GENERAL NOTE 5/1

Approved as complying with the Florida Building Code
Date 08/18/05
NOA# 03-0314.02
Miami Dade Product Control Division
By

MIAMI-DADE COUNTY

6/7/05

P.E. SEAL/SIGNATURE/DATE

TILLECO INC.
TILLIT TESTING & ENGINEERING COMPANY
6355 N.W. 36th. St., Ste. 305, VIRGINIA GARDENS, Fl. 33166
Phone : (305)871-1530 , Fax : (305)871-1531
EB-0006719
WALTER A. TILLIT Jr. P. E.
FLORIDA Lic. # 44167

VV-10-D ALUMINUM LOUVER W/ OR W/O CD-151 DAMPER ASSEMBLY

United Enertech
3101 S. Orchard Knob Ave.
Chattanooga, TN 37407
Telephone:(423)698-7715

REV. No	DESCRIPTION	DATE	REV. No	DESCRIPTION	DATE
1	-	-	3		
2	-	-	4		

AS SHOWN
SCALE

2/9/05
DATE

05-021
DRAWING No

SHEET 6 OF 7

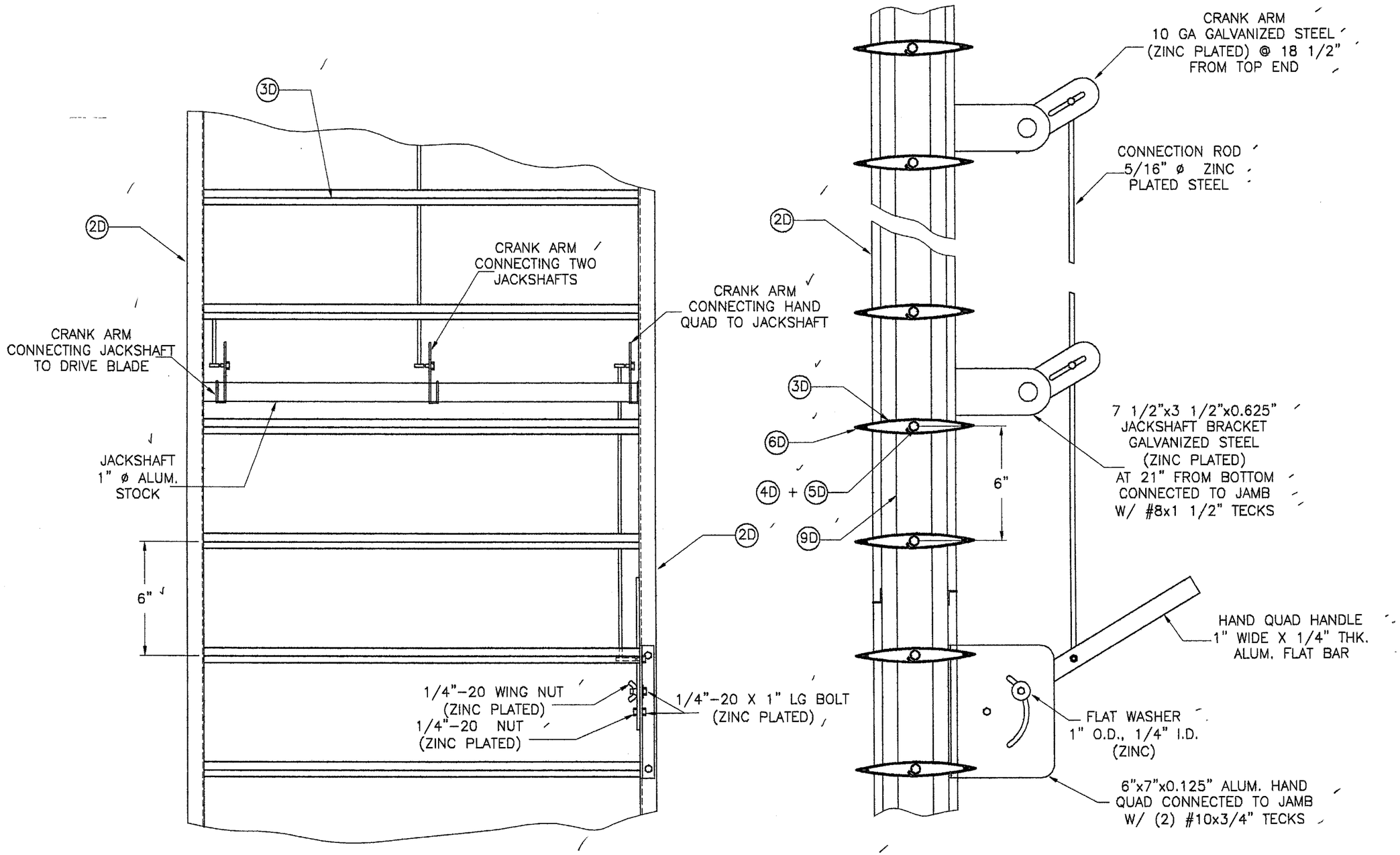

HAND QUADRANT HANDLE MECHANISM

F.B.C. (High Velocity Hurricane Zone)

(SEE GENERAL NOTE 8/1)

Approved as complying with the Florida Building Code
Date 08/18/05
NOA# 03-0514.02
Miami Dade Product Control Division
By

MIAMI-DADE COUNTY

6/7/05

P.E. SEAL/SIGNATURE/DATE

TILTECO INC.
TILLIT TESTING & ENGINEERING COMPANY
6355 N.W. 36th. St., Ste. 305, VIRGINIA GARDENS, Fl. 33166
Phone : (305)871-1530 , Fax : (305)871-1531
EB-0006719
WALTER A. TILLIT Jr. P. E.
FLORIDA Lic. # 44167

VV-10-D ALUMINUM LOUVER W/ OR W/O CD-151 DAMPER ASSEMBLY

United Enertech
3101 S. Orchard Knob Ave.
Chattanooga, TN 37407
Telephone:(423)698-7715

REV. No	DESCRIPTION	DATE	REV. No	DESCRIPTION	DATE
1	-	-	3		
2	-	-	4		

AS SHOWN
SCALE

2/9/05
DATE

05-021
DRAWING No

SHEET 7 OF 7