MIAMI-DADE

BUILDING CODE COMPLIANCE OFFICE (BCCO)
PRODUCT CONTROL DIVISION

MIAMI-DADE COUNTY, FLORIDA
METRO-DADE FLAGLER BUILDING
140 WEST FLAGLER STREET, SUITE 1603
MIAMI, FLORIDA 33130-1563
(305) 375-2901 FAX (305) 375-2908

NOTICE OF ACCEPTANCE (NOA)

YKK AP America Inc.
332 Firetower Road
Dublin, GA 31021

SCOPE:
This NOA is being issued under the applicable rules and regulations governing the use of construction materials. The documentation submitted has been reviewed by Miami-Dade County Product Control Division and accepted by the Board of Rules and Appeals (BORA) to be used in Miami Dade County and other areas where allowed by the Authority Having Jurisdiction (AHJ).

This NOA shall not be valid after the expiration date stated below. The Miami-Dade County Product Control Division (In Miami Dade County) and/or the AHJ (in areas other than Miami Dade County) reserve the right to have this product or material tested for quality assurance purposes. If this product or material fails to perform in the accepted manner, the manufacturer will incur the expense of such testing and the AHJ may immediately revoke, modify, or suspend the use of such product or material within their jurisdiction. BORA reserves the right to revoke this acceptance, if it is determined by Miami-Dade County Product Control Division that this product or material fails to meet the requirements of the applicable building code.

This product is approved as described herein, and has been designed to comply with the Florida Building Code, including the High Velocity Hurricane Zone.

DESCRIPTION: Series YHS 50 TU Aluminum Storefront System-S.M.I.

APPROVAL DOCUMENT: Drawing No. **W05-01**, titled "Series YHS 50 TU Alum. Storefront System-S.M.I.", sheets 1 through 8 of 8, dated 01/10/05, prepared by AL-Farooq Corporation, signed and sealed by Humayoun Farooq, P.E., bearing the Miami-Dade County Product Control Approval stamp with the Notice of Acceptance number and approval date by the Miami-Dade County Product Control Division.

MISSILE IMPACT RATING: Small Missile Impact

LABELING: Each unit shall bear a permanent label with the manufacturer's name or logo, city, state and following statement: "Miami-Dade County Product Control Approved", unless otherwise noted herein.

RENEWAL of this NOA shall be considered after a renewal application has been filed and there has been no change in the applicable building code negatively affecting the performance of this product.

TERMINATION of this NOA will occur after the expiration date or if there has been a revision or change in the materials, use, and/or manufacture of the product or process. Misuse of this NOA as an endorsement of any product, for sales, advertising or any other purposes shall automatically terminate this NOA. Failure to comply with any section of this NOA shall be cause for termination and removal of NOA.

ADVERTISEMENT: The NOA number preceded by the words Miami-Dade County, Florida, and followed by the expiration date may be displayed in advertising literature. If any portion of the NOA is displayed, then it shall be done in its entirety.

INSPECTION: A copy of this entire NOA shall be provided to the user by the manufacturer or its distributors and shall be available for inspection at the job site at the request of the Building Official.
This NOA consists of this page 1 and evidence pages E-1, as well as approval document mentioned above.
The submitted documentation was reviewed by **Herminio F. Gonzalez, P.E., Director, BCCO**

4/18/2005

PRODUCT CONTROL ACCEPTED

YKK AP America

NOTICE OF ACCEPTANCE: EVIDENCE SUBMITTED

A. DRAWINGS

1. Manufacturer's die drawings and sections.
2. Drawing No. **W05-01**, titled "YHS 50 TU Alum Storefront System-S.M.I.", sheets 1 through 8 of 8, dated 01/10/05, prepared by AL-Farooq Corporation, signed and sealed by Humayoun Farooq, P.E.

B. TESTS

1. Test reports on 1) Air Infiltration Test, per FBC, TAS 202-94
   2) Uniform Static Air Pressure Test, Loading per FBC TAS 202-94
   3) Water Resistance Test, per FBC, TAS 202-94
   4) Small Missile Impact Test per FBC, TAS 201-94
   5) Cyclic Wind Pressure Loading per FBC, TAS 203-94

   along with marked-up drawings and installation diagram of a series YHS 50 TU aluminum storefront system, prepared by Hurricane Test Laboratory, LLC, Test Report No. **HTL-0231-0704-04-(specimen 1, 2, 3, 4, &5)** dated various, signed and sealed by Vinu J. Abraham, P.E.

C. CALCULATIONS

1. Anchor Calculations, ASTM-E1300, and structural analysis, prepared by AL-Farooq Corporation, dated 01/11/05, signed and sealed by Humayoun Farooq, P.E.

D. QUALITY ASSURANCE

1. Miami Dade Building Code Compliance Office (BCCO).

E. MATERIAL CERTIFICATIONS

1. Notice of Acceptance No. **00-1212.04** issued to E.I. DuPont DeNemours for their "Dupont Butacite ® PVB" dated 02/15/01, expiring on 12/11/05.
2. Notice of Acceptance No. **01-0205.02** issued to Solutia, Inc. for their "Saflex/Keepsafe Maximum" dated 05/17/01, expiring on 05/21/06.

F. STATEMENTS

1. Statement letter of conformance, dated 01/11/05, signed and sealed by Humayoun Farooq, P.E.
2. Statement letter of no financial interest, dated 01/11/05, signed and sealed by Humayoun Farooq, P.E.

G. OTHER

1. Letter from the consultant stating that the product is in compliance with the Florida Building Code (Code).

for

Herminio F. Gonzalez, P.E.
Director, Building Code Compliance Office
NOA No 05-0317.04
Expiration Date: May 12, 2010
Approval Date: May 12, 2005

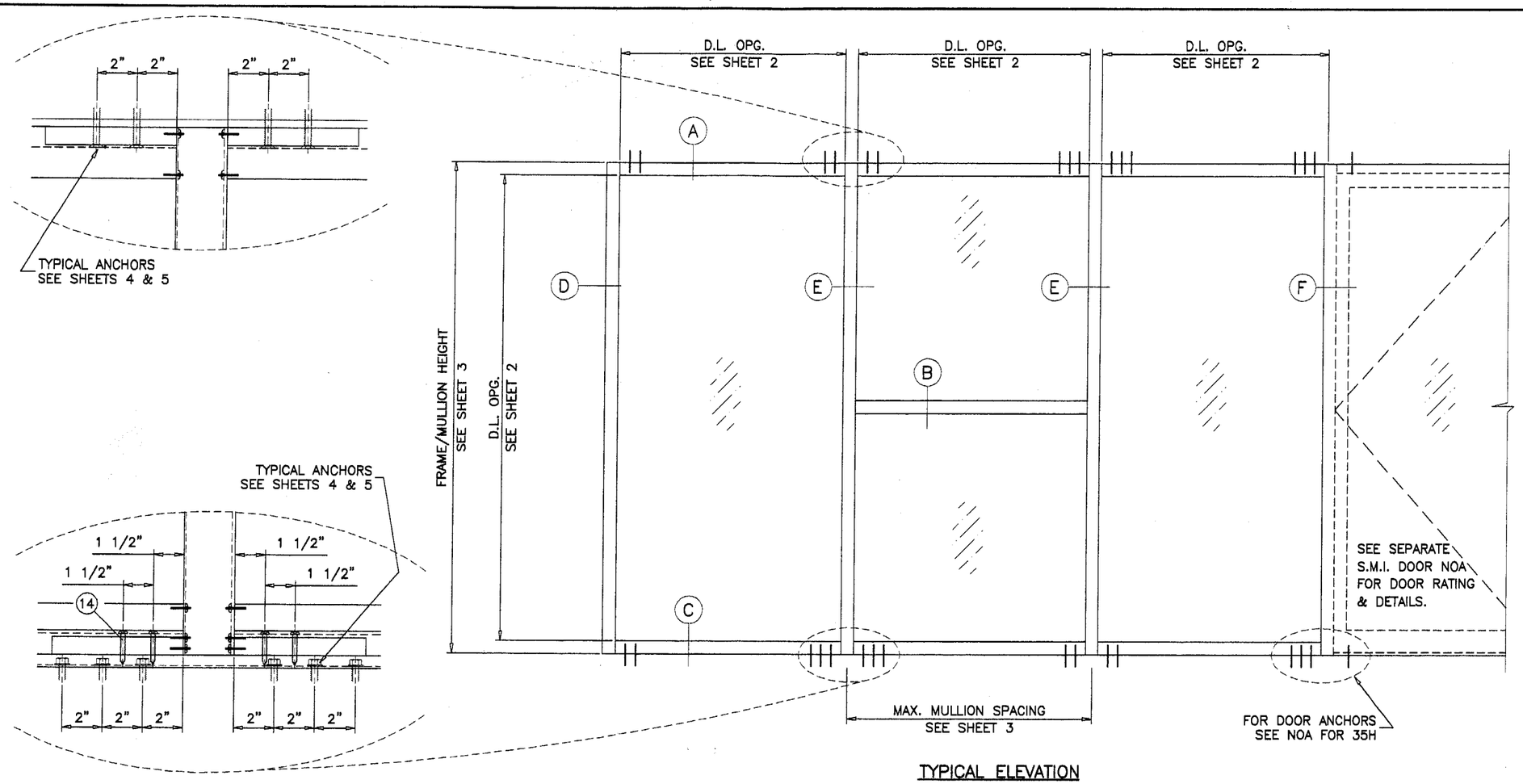

TYPICAL ELEVATION

YHS 50 TU ALUMINUM STOREFRONT SYSTEM

THIS PRODUCT RATED FOR SMALL MISSILE IMPACT.
MIAMI–DADE COUNTY APPROVED IMPACT RESISTANT SHUTTERS REQUIRED FOR INSTALLATIONS UP TO 30 FT. OF GRADE.
SHUTTERS NOT REQD. FOR INSTALLATIONS ABOVE 30 FT. OF GRADE.

THIS SYSTEM MAY BE USED IN CONJUNCTION WITH MIAMI–DADE COUNTY APPR'D SMALL MISSILE IMPACT RESISTANT ENTRANCE DOORS.

CODE REQUIREMENTS FOR SAFEGUARDS MUST BE OBSERVED.

THIS PRODUCT HAS BEEN DESIGNED AND TESTED TO COMPLY WITH THE REQUIREMENTS OF THE FLORIDA BUILDING CODE INCLUDING HIGH VELOCITY HURRICANE ZONE.

WOOD BUCKS BY OTHERS, MUST BE ANCHORED PROPERLY TO TRANSFER LOADS TO THE STRUCTURE.

ANCHORS SHALL BE AS LISTED, SPACED AS SHOWN ON DETAILS. ANCHOR EMBEDMENT TO BASE MATERIAL SHALL BE BEYOND WALL DRESSING OR STUCCO.

ALL STEEL IN CONTACT WITH ALUMINUM TO BE PAINTED OR PLATED.

ANCHORING OR LOADING CONDITIONS NOT SHOWN IN THESE DETAILS ARE NOT PART OF THIS APPROVAL.

A 33% INCREASE IN ALLOWABLE STRESS IS USED IN DESIGN OF ANCHORS.

INSTRUCTIONS:

USE CHARTS AS FOLLOWS.

STEP 1 DETERMINE DESIGN WIND LOAD REQUIREMENT BASED ON WIND VELOCITY, BLDG. HEIGHT, WIND ZONE USING APPLICABLE ASCE 7 STANDARD.

STEP 2 SEE CHART ON SHEET 2 FOR DESIGN LOAD CAPACITY OF DESIRED GLASS SIZE.

STEP 3 CHECK MULLION CAPACITY FOR A GIVEN SPACING AND HEIGHT USING CHARTS ON SHEET 3
THE CAPACITY SHOULD EXCEED THE DESIGN LOAD.

STEP 4 USING CHARTS ON SHEET 4 SELECT ANCHOR OPTION WITH DESIGN RATING MORE THAN DESIGN LOAD SPECIFIED IN STEP 1 ABOVE.

Approved as complying with the Florida Building Code
Date 05/12/05
NOA# 05-0317.04
Miami Dade Product Control Division
By

LAMINATED INSULATING GLASS
SMALL MISSILE IMPACT

Engr: DR. HUMAYOUN FAROOQ
STRUCTURES
FLA. PE # 16557
C.A.N. 3538

MAR 09 2005

AL–FAROOQ CORPORATION
ENGINEERS, PLANNERS & PRODUCT DESIGN
1235 SW 87 AVE
MIAMI, FLORIDA 33174
TEL. (305) 264–8100 FAX. (305) 262–6978
STORE\W05–01YKK

YHS 50 TU ALUM STOREFRONT SYSTEM (S.M.I.)

YKK AP AMERICA INC.
332 FIRETOWER ROAD
DUBLIN, GEORGIA 31021
TEL(478) 277–1955 FAX(478) 277–1978

revisions:			
no	date	by	description

date: 01–10–05
scale: 1/2"=1'–0"
dr. by: HAMID
chk. by:

drawing no.
W05–01

GLASS LOAD CAPACITY – PSF		
NOMINAL DIMS.		TYPE 'F' & 'G'
D.L.O. WIDTH	D.L.O. HEIGHT	EXT.(+) & INT.(–)
24"	43"	70.0
30"		70.0
36"		70.0
42"		70.0
48"		70.0
54"		70.0
60"		70.0
66"		70.0
72"		70.0
24"	49"	70.0
30"		70.0
36"		70.0
42"		70.0
48"		70.0
54"		70.0
60"		70.0
66"		70.0
72"		70.0
24"	55"	70.0
30"		70.0
36"		70.0
42"		70.0
48"		70.0
54"		70.0
60"		70.0
66"		70.0
72"		70.0
24"	61"	70.0
30"		70.0
36"		70.0
42"		70.0
48"		70.0
54"		70.0
60"		70.0
66"		70.0
72"		70.0
24"	67"	70.0
30"		70.0
36"		70.0
42"		70.0
48"		70.0
54"		70.0
60"		70.0
66"		70.0
72"		70.0
24"	73"	70.0
30"		70.0
36"		70.0
42"		70.0
48"		70.0
54"		70.0
60"		70.0
66"		70.0
72"		70.0

GLASS LOAD CAPACITY – PSF		
NOMINAL DIMS.		TYPE 'F' & 'G'
D.L.O. WIDTH	D.L.O. HEIGHT	EXT.(+) & INT.(–)
24"	79"	70.0
30"		70.0
36"		70.0
42"		70.0
48"		70.0
54"		70.0
60"		70.0
66"		70.0
72"		70.0
24"	85"	70.0
30"		70.0
36"		70.0
42"		70.0
48"		70.0
54"		70.0
60"		70.0
66"		70.0
24"	91"	70.0
30"		70.0
36"		70.0
42"		70.0
48"		70.0
54"		70.0
60"		70.0
24"	97"	70.0
30"		70.0
36"		70.0
42"		70.0
48"		70.0
54"		70.0
60"		70.0
24"	103"	70.0
30"		70.0
36"		70.0
42"		70.0
48"		70.0
54"		70.0
24"	109"	70.0
30"		70.0
36"		70.0
42"		70.0
48"		70.0
54"		70.0
24"	115"	70.0
30"		70.0
36"		70.0
42"		70.0
48"		70.0

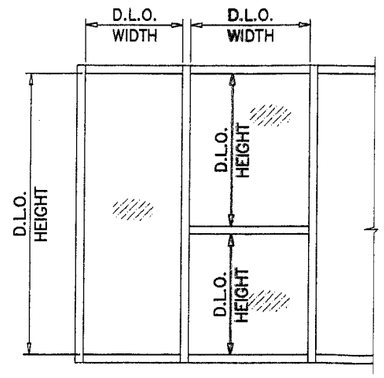

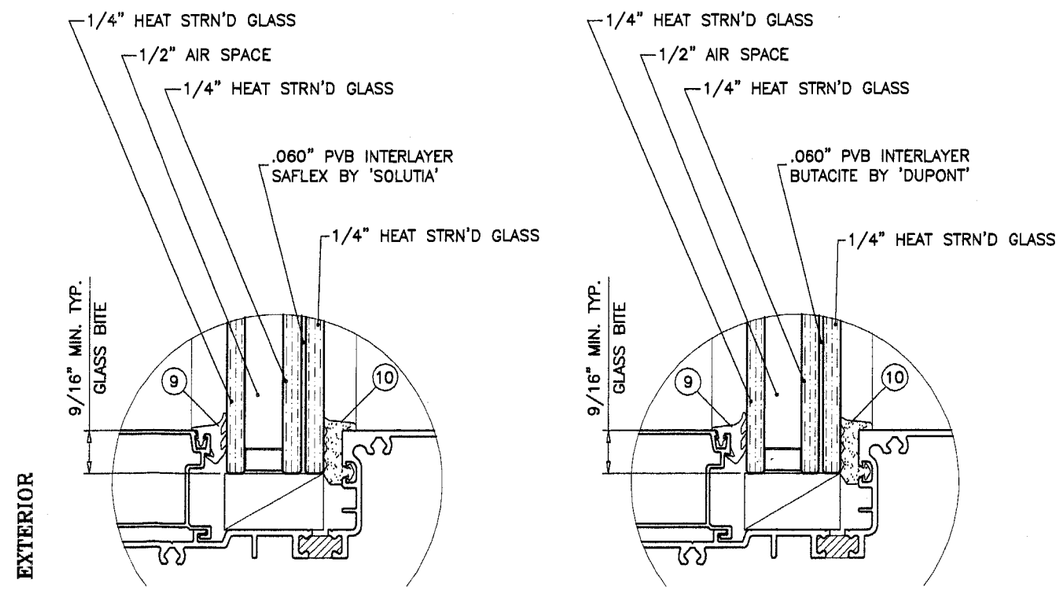

GLASS TYPE 'F'

GLASS TYPE 'G'

GLAZING OPTIONS

Approved as complying with the Florida Building Code
Date 03/12/05
NOA# 05-0317.04
Miami-Dade Product Control Division
By

Engr: DR. HUMAYOUN FAROOQ
STRUCTURES
FLA. PE # 16557
C.A.N. 3538

MAR 09 2005

AL-FAROOQ CORPORATION
ENGINEERS, PLANNERS & PRODUCT DESIGN
1235 SW 87 AVE
MIAMI, FLORIDA 33174
TEL. (305) 264-8100 FAX. (305) 262-6978
STORE\W05-01YKK

YHS 50 TU ALUM STOREFRONT SYSTEM (S.M.I.)

YKK AP AMERICA INC.
332 FIRETOWER ROAD
DUBLIN, GEORGIA 31021
TEL(478) 277-1955 FAX(478) 277-1978

revisions:			
no	date	by	description

date: 01-10-05
scale:
dr. by: HAMID
chk. by:

drawing no. W05-01

sheet 2 of 8

JAMB/MULLION LOAD CAPACITY – PSF
WITHOUT INTERMEDIATE HORIZONTALS

NOMINAL DIMS.		STANDARD CONFIG.	HEAVY CONFIG.
WIDTH (W)	FRAME HEIGHT	EXT.(+) & INT.(–)	EXT.(+) & INT.(–)
24"	72"	70.0	70.0
30"		70.0	70.0
36"		70.0	70.0
42"		70.0	70.0
48"		70.0	70.0
54"		70.0	70.0
60"		70.0	70.0
66"		50.0	70.0
72"		50.0	70.0
24"	78"	70.0	70.0
30"		70.0	70.0
36"		70.0	70.0
42"		70.0	70.0
48"		70.0	70.0
54"		70.0	70.0
60"		50.0	70.0
66"		50.0	70.0
72"		–	70.0
24"	84"	70.0	70.0
30"		70.0	70.0
36"		70.0	70.0
42"		70.0	70.0
48"		70.0	70.0
54"		70.0	70.0
60"		50.0	70.0
66"		–	70.0
72"		–	70.0
24"	90"	70.0	70.0
30"		70.0	70.0
36"		70.0	70.0
42"		70.0	70.0
48"		70.0	70.0
54"		50.0	70.0
60"		–	70.0
66"		–	70.0
72"		–	70.0
24"	96"	70.0	70.0
30"		70.0	70.0
36"		70.0	70.0
42"		70.0	70.0
48"		70.0	70.0
54"		50.0	70.0
60"		–	70.0
66"		–	70.0
24"	102"	70.0	70.0
30"		70.0	70.0
36"		70.0	70.0
42"		64.4	70.0
48"		50.0	70.0
54"		–	70.0
60"		–	70.0
24"	108"	70.0	70.0
30"		70.0	70.0
36"		61.8	70.0
42"		53.9	70.0
48"		50.0	70.0
54"		–	70.0
60"		–	70.0

JAMB/MULLION LOAD CAPACITY – PSF
WITHOUT INTERMEDIATE HORIZONTALS

NOMINAL DIMS.		STANDARD CONFIG.	HEAVY CONFIG.
WIDTH (W)	FRAME HEIGHT	EXT.(+) & INT.(–)	EXT.(+) & INT.(–)
24"	114"	70.0	70.0
30"		62.0	70.0
36"		52.3	70.0
42"		47.3	70.0
48"		–	70.0
54"		–	63.8
24"	120"	65.7	70.0
30"		53.0	70.0
36"		44.7	70.0
42"		40.4	67.3
48"		–	59.8
54"		–	54.2

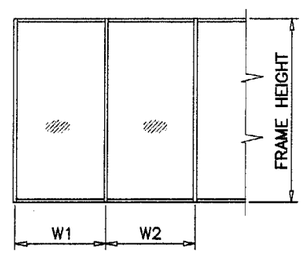

WIDTH (W) = $\frac{W1 + W2}{2}$
AT FRAME MULLION

WIDTH (W) = W1
AT FRAME JAMB

JAMB/MULLION LOAD CAPACITY – PSF
WITH INTERMEDIATE HORIZONTALS

NOMINAL DIMS.		STANDARD CONFIG.	HEAVY CONFIG.
WIDTH (W)	FRAME HEIGHT	EXT.(+) & INT.(–)	EXT.(+) & INT.(–)
24"	78"	70.0	70.0
30"		70.0	70.0
36"		70.0	70.0
42"		70.0	70.0
48"		70.0	70.0
54"		70.0	70.0
60"		50.0	70.0
24"	84"	70.0	70.0
30"		70.0	70.0
36"		70.0	70.0
42"		70.0	70.0
48"		70.0	70.0
54"		70.0	70.0
60"		50.0	70.0
24"	90"	70.0	70.0
30"		70.0	70.0
36"		70.0	70.0
42"		70.0	70.0
48"		70.0	70.0
54"		50.0	70.0
60"		–	70.0
24"	96"	70.0	70.0
30"		70.0	70.0
36"		70.0	70.0
42"		70.0	70.0
48"		63.3	70.0
54"		50.0	70.0
60"		–	70.0
24"	102"	70.0	70.0
30"		70.0	70.0
36"		70.0	70.0
42"		60.3	70.0
48"		50.0	70.0
54"		–	70.0
60"		–	70.0
24"	108"	70.0	70.0
30"		70.0	70.0
36"		59.3	70.0
42"		50.8	70.0
48"		46.2	70.0
54"		–	68.5
60"		–	61.7

JAMB/MULLION LOAD CAPACITY – PSF
WITH INTERMEDIATE HORIZONTALS

NOMINAL DIMS.		STANDARD CONFIG.	HEAVY CONFIG.
WIDTH (W)	FRAME HEIGHT	EXT.(+) & INT.(–)	EXT.(+) & INT.(–)
24"	114"	70.0	70.0
30"		60.5	70.0
36"		50.4	70.0
42"		44.9	70.0
48"		–	65.6
54"		–	58.3
24"	120"	64.8	70.0
30"		51.8	70.0
36"		44.9	70.0
42"		38.5	64.2
48"		–	56.2
54"		–	50.0

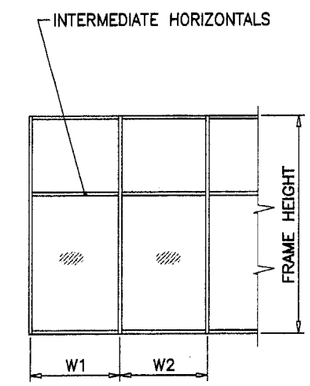

WIDTH (W) = $\frac{W1 + W2}{2}$
AT FRAME MULLION

WIDTH (W) = W1
AT FRAME JAMB

Approved as complying with the Florida Building Code
Date 05/12/05
NOA# 05-0317.04
Miami-Dade Product Control Division
By

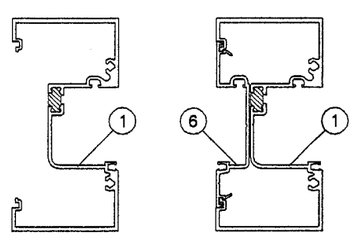

JAMB MULLION

STD. CONFIGURATION

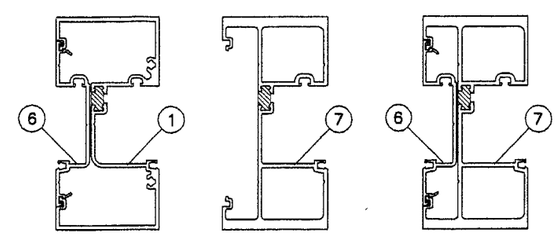

JAMB JAMB MULLION

HEAVY CONFIGURATION

Engr: DR. HUMAYOUN FAROOQ
STRUCTURES
FLA. PE # 16557
C.A.N. 3538

MAR 0 9 2005

AL-FAROOQ CORPORATION
ENGINEERS, PLANNERS & PRODUCT DESIGN
1235 SW 87 AVE
MIAMI, FLORIDA 33174
TEL. (305) 264-8100 FAX. (305) 262-6978
STORE\W05-01YKK

YHS 50 TU ALUM STOREFRONT SYSTEM (S.M.I.)

YKK AP AMERICA INC.
332 FIRETOWER ROAD
DUBLIN, GEORGIA 31021
TEL.(478) 277-1955 FAX(478) 277-1978

revisions:			
no	date	by	description

date: 01-10-05
scale:
dr. by: HAMID
chk. by:

drawing no. W05-01

ANCHOR LOAD CAPACITY – PSF EXT.(+) & INT.(–)				
NOMINAL DIMS.		ANCHORS TYPE		TYPE
WIDTH (W)	FRAME HEIGHT	A2	A3	B2
24"	60"	70.0	70.0	70.0
30"		70.0	70.0	70.0
36"		70.0	70.0	70.0
42"		70.0	70.0	70.0
48"		70.0	70.0	70.0
54"		70.0	70.0	70.0
60"		70.0	70.0	70.0
66"		70.0	70.0	70.0
72"		68.8	70.0	70.0
24"	66"	70.0	70.0	70.0
30"		70.0	70.0	70.0
36"		70.0	70.0	70.0
42"		70.0	70.0	70.0
48"		70.0	70.0	70.0
54"		70.0	70.0	70.0
60"		70.0	70.0	70.0
66"		68.2	70.0	70.0
72"		62.5	70.0	70.0
24"	72"	70.0	70.0	70.0
30"		70.0	70.0	70.0
36"		70.0	70.0	70.0
42"		70.0	70.0	70.0
48"		70.0	70.0	70.0
54"		70.0	70.0	70.0
60"		68.8	70.0	70.0
66"		62.5	70.0	70.0
72"		57.3	70.0	70.0
24"	78"	70.0	70.0	70.0
30"		70.0	70.0	70.0
36"		70.0	70.0	70.0
42"		70.0	70.0	70.0
48"		70.0	70.0	70.0
54"		70.0	70.0	70.0
60"		63.5	70.0	70.0
66"		57.7	70.0	70.0
72"		52.9	70.0	70.0
24"	84"	70.0	70.0	70.0
30"		70.0	70.0	70.0
36"		70.0	70.0	70.0
42"		70.0	70.0	70.0
48"		70.0	70.0	70.0
54"		65.5	70.0	70.0
60"		59.0	70.0	70.0
66"		53.6	70.0	70.0
72"		49.1	70.0	70.0

ANCHOR LOAD CAPACITY – PSF EXT.(+) & INT.(–)				
NOMINAL DIMS.		ANCHORS TYPE		TYPE
WIDTH (W)	FRAME HEIGHT	A2	A3	B2
24"	90"	70.0	70.0	70.0
30"		70.0	70.0	70.0
36"		70.0	70.0	70.0
42"		70.0	70.0	70.0
48"		68.8	70.0	70.0
54"		61.2	70.0	70.0
60"		55.0	70.0	70.0
66"		50.0	70.0	70.0
72"		45.9	68.8	70.0
24"	96"	70.0	70.0	70.0
30"		70.0	70.0	70.0
36"		70.0	70.0	70.0
42"		70.0	70.0	70.0
48"		64.5	70.0	70.0
54"		57.3	70.0	70.0
60"		51.6	70.0	70.0
66"		46.9	70.0	70.0
24"	102"	70.0	70.0	70.0
30"		70.0	70.0	70.0
36"		70.0	70.0	70.0
42"		69.4	70.0	70.0
48"		60.7	70.0	70.0
54"		54.0	70.0	70.0
60"		48.6	70.0	70.0
24"	108"	70.0	70.0	70.0
30"		70.0	70.0	70.0
36"		70.0	70.0	70.0
42"		65.5	70.0	70.0
48"		57.3	70.0	70.0
54"		51.0	70.0	70.0
60"		45.9	68.8	70.0
24"	114"	70.0	70.0	70.0
30"		70.0	70.0	70.0
36"		70.0	70.0	70.0
42"		62.1	70.0	70.0
48"		54.3	70.0	70.0
54"		48.3	70.0	70.0
24"	120"	70.0	70.0	70.0
30"		70.0	70.0	70.0
36"		68.8	70.0	70.0
42"		59.0	70.0	70.0
48"		51.6	70.0	70.0
54"		45.9	68.8	70.0

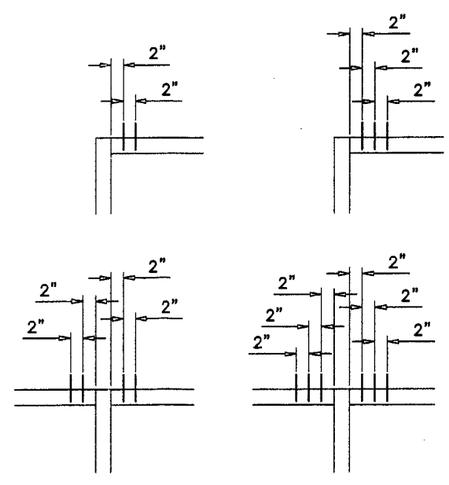

A2, B2, A3

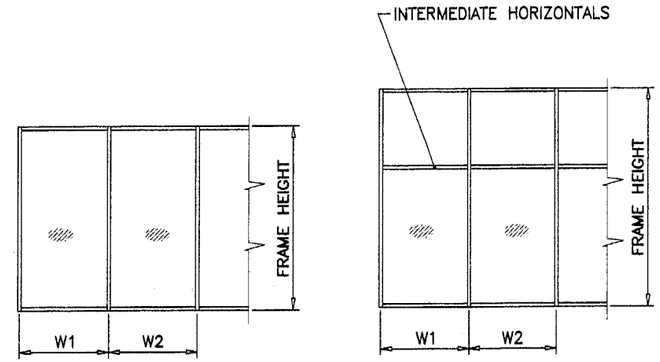

WIDTH (W) = $\frac{W1 + W2}{2}$
AT FRAME MULLION

WIDTH (W) = W1
AT FRAME JAMB

ANCHORS TYPES: SEE SHEET 5 FOR DESCRIPTION

A2 = (2) ANCHORS TYPE 'A' AT EACH SIDE OF JAMB/MULLION
A3 = (3) ANCHORS TYPE 'A' AT EACH SIDE OF JAMB/MULLION

B2 = (2) ANCHORS TYPE 'B' AT EACH SIDE OF JAMB/MULLION

ALL OTHER ANCHORS TO BE SPACED AS PER ELEVATION.

Approved as complying with the Florida Building Code
Date 05/12/05
NOA# 05-0317.04
Miami-Dade Product Control Division
By

Engr: DR. HUMAYOUN FAROOQ
STRUCTURES
FLA. PE # 16557
C.A.N. 3538

MAR 09 2005

AL-FAROOQ CORPORATION
ENGINEERS, PLANNERS & PRODUCT DESIGN
1235 SW 87 AVE
MIAMI, FLORIDA 33174
TEL (305) 264-8100 FAX. (305) 262-6978
STORE\W05-01YKK

YHS 50 TU ALUM STOREFRONT SYSTEM (S.M.I.)

YKK AP AMERICA INC.
332 FIRETOWER ROAD
DUBLIN, GEORGIA 31021
TEL(478) 277-1955 FAX(478) 277-1978

revisions:

no	date	by	description

date: 01-10-05
scale:
dr. by: HAMID
chk. by:

drawing no. W05-01

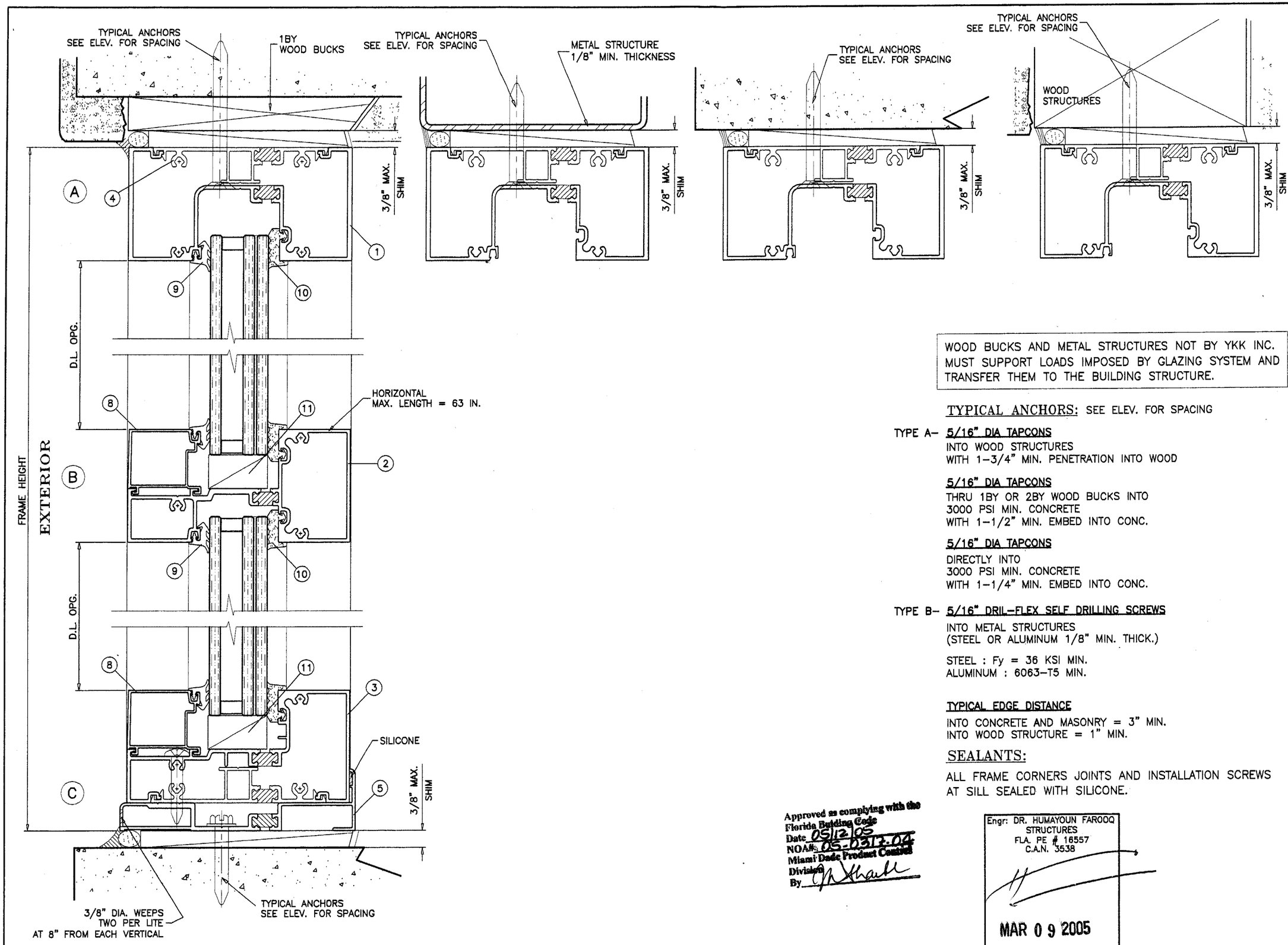

WOOD BUCKS AND METAL STRUCTURES NOT BY YKK INC. MUST SUPPORT LOADS IMPOSED BY GLAZING SYSTEM AND TRANSFER THEM TO THE BUILDING STRUCTURE.

TYPICAL ANCHORS: SEE ELEV. FOR SPACING

TYPE A– **5/16" DIA TAPCONS**
INTO WOOD STRUCTURES
WITH 1–3/4" MIN. PENETRATION INTO WOOD

5/16" DIA TAPCONS
THRU 1BY OR 2BY WOOD BUCKS INTO
3000 PSI MIN. CONCRETE
WITH 1–1/2" MIN. EMBED INTO CONC.

5/16" DIA TAPCONS
DIRECTLY INTO
3000 PSI MIN. CONCRETE
WITH 1–1/4" MIN. EMBED INTO CONC.

TYPE B– **5/16" DRIL–FLEX SELF DRILLING SCREWS**
INTO METAL STRUCTURES
(STEEL OR ALUMINUM 1/8" MIN. THICK.)

STEEL : Fy = 36 KSI MIN.
ALUMINUM : 6063–T5 MIN.

TYPICAL EDGE DISTANCE
INTO CONCRETE AND MASONRY = 3" MIN.
INTO WOOD STRUCTURE = 1" MIN.

SEALANTS:

ALL FRAME CORNERS JOINTS AND INSTALLATION SCREWS AT SILL SEALED WITH SILICONE.

Approved as complying with the Florida Building Code
Date 05/12/05
NOA# 05-0317.04
Miami-Dade Product Control Division
By

Engr: DR. HUMAYOUN FAROOQ
STRUCTURES
FLA. PE # 16557
C.A.N. 3538

MAR 0 9 2005

AL–FAROOQ CORPORATION
ENGINEERS, PLANNERS & PRODUCT DESIGN
1235 SW 87 AVE
MIAMI, FLORIDA 33174
TEL (305) 264–8100 FAX. (305) 262–6978

STORE\W05–01YKK

YHS 50 TU ALUM STOREFRONT SYSTEM (S.M.I.)

YKK AP AMERICA INC.
332 FIRETOWER ROAD
DUBLIN, GEORGIA 31021
TEL(478) 277–1955 FAX(478) 277–1978

revisions:			
no	date	by	description

date: 01–10–05
scale: 1/2" = 1"
dr. by: HAMID
chk. by:

drawing no.
W05–01

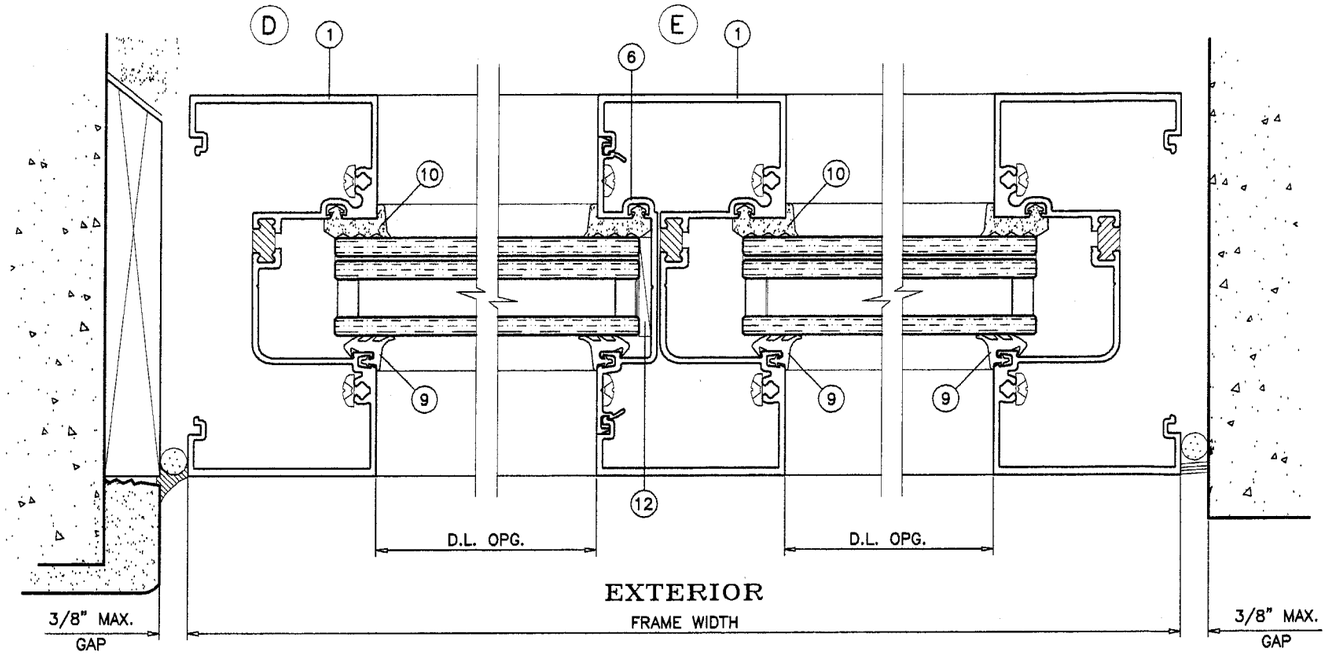

STD. CONFIGURATION

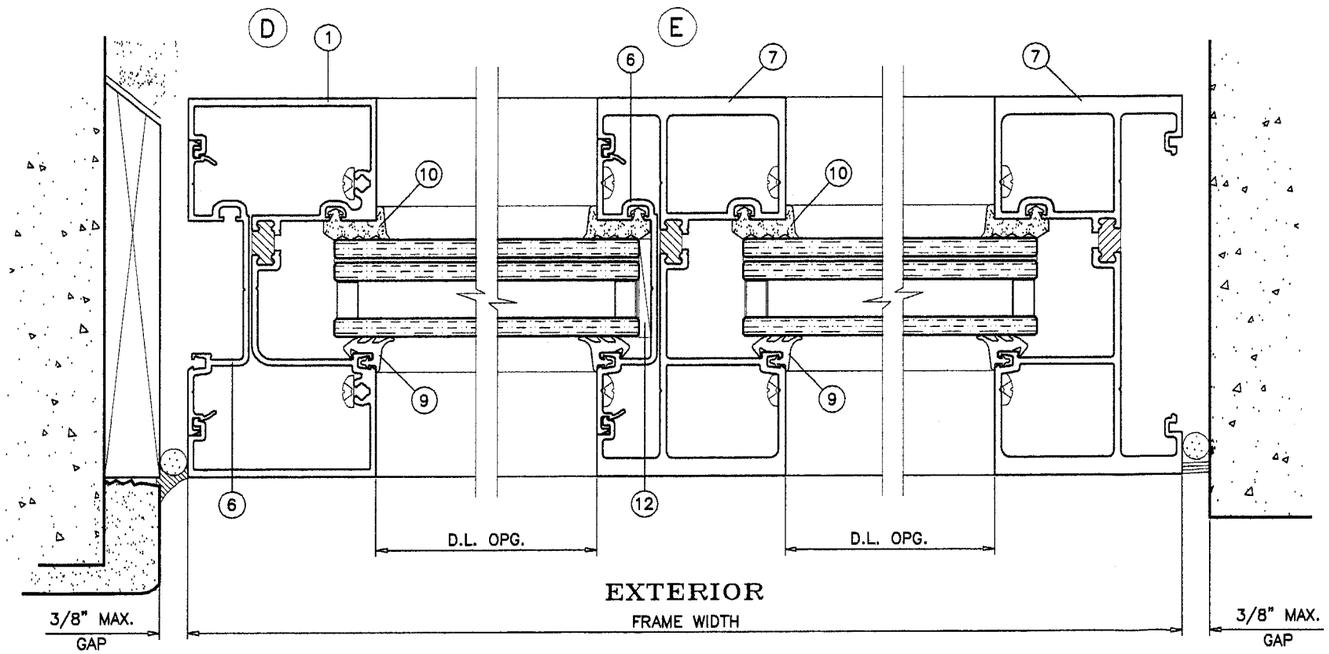

HEAVY CONFIGURATION

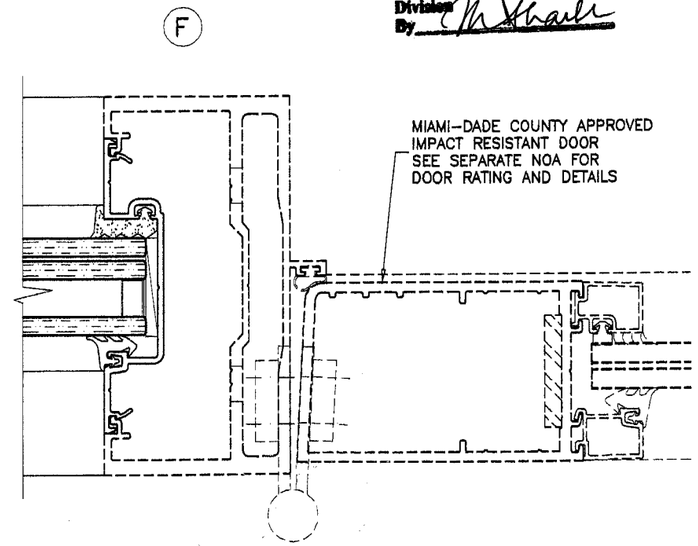

Approved as complying with the Florida Building Code
Date 05/12/05
NOA# 05-0317.04
Miami Dade Product Control Division
By

Engr: D.R. HUMAYOUN FAROOQ
STRUCTURES
FLA. PE # 16557
C.A.N. 3538

MAR 0 9 2005

AL-FAROOQ CORPORATION
ENGINEERS, PLANNERS & PRODUCT DESIGN
1235 SW 87 AVE
MIAMI, FLORIDA 33174
TEL. (305) 264-8100 FAX. (305) 262-6978
STORE\W05-01YKK

YHS 50 TU ALUM STOREFRONT SYSTEM (S.M.I.)

YKK AP AMERICA INC.
332 FIRETOWER ROAD
DUBLIN, GEORGIA 31021
TEL(478) 277-1955 FAX(478) 277-1978

revisions:

no	date	by	description

date: 01-10-05
scale: 1/2" = 1"
dr. by: HAMID
chk. by:

drawing no.
W05-01

sheet 6 of 8

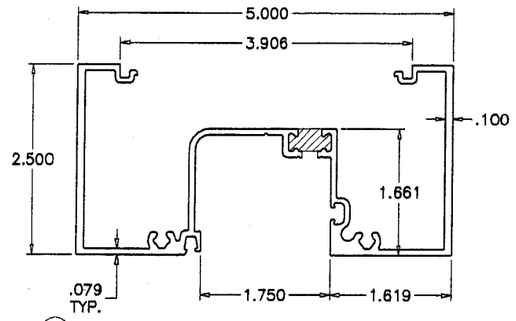

1 FRAME HEAD/SILL/JAMB

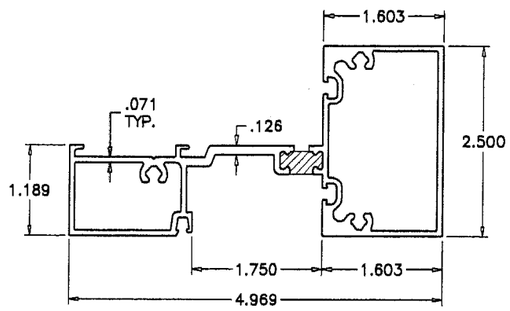

2 FRAME HORIZONTAL

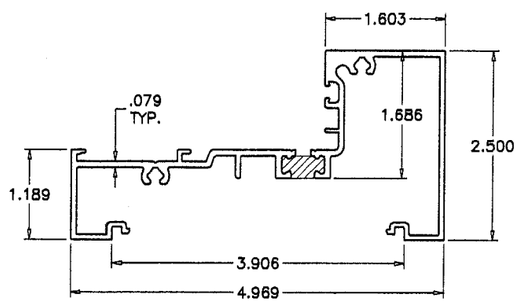

3 FRAME SILL

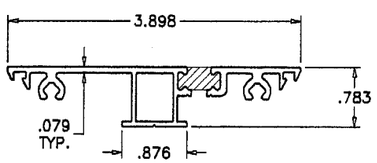

4 FLAT FILLER

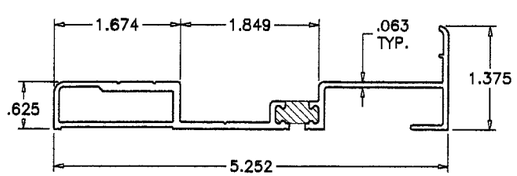

5 SILL FLASHING

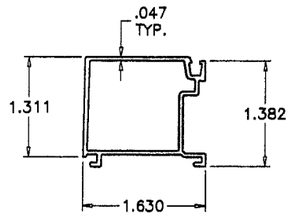

8 GLAZING STOP

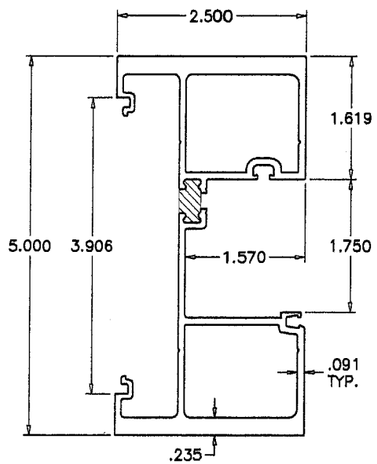

7 HEAVY DUTY MULLION

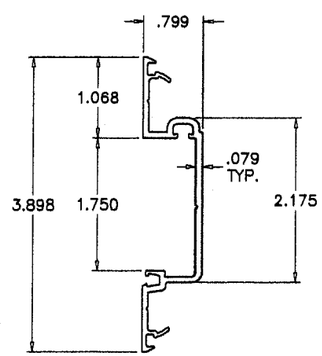

6 SHALLOW POCKET FILLER

ITEM NO.	PART NUMBER	QUANTITY	DESCRIPTION	MATERIAL	MANF./SUPPLIER/REMARKS
1	BE9-0681	AS NEEDED	FRAME HEAD/SILL/JAMB	6063-T5	–
2	BE9-0683	AS NEEDED	FRAME HORIZONTAL	6063-T5	–
3	BE9-0682	AS NEEDED	FRAME SILL	6063-T5	–
4	E1-1060	AS NEEDED	FLAT FILLER	6063-T5	–
5	BE9-0686	AS NEEDED	SILL FLASHING	6063-T5	–
6	BE9-0655	AS NEEDED	SHALLOW POCKET FILLER	6063-T5	–
7	BE9-0684	AS NEEDED	HEAVY DUTY MULLION	6063-T5	–
8	E9-0658	AS NEEDED	GLAZING STOP	EPDM	–
9	E2-0083	AS NEEDED	EXTERIOR GLAZING GASKET	EPDM	–
10	E2-0088	AS NEEDED	INTERIOR GLAZING GASKET	EPDM SPONGE	–
11	E2-0095	AS NEEDED	SETTING BLOCK	EPDM	–
12	E2-0096	AS NEEDED	SIDE BLOCK	EPDM	–
13	PC-1220	AS NEEDED	ASSEMBLY SCREWS PHSMS	CRS	#12 X 1-1/4" PPH SMS
14	PC-1424	AS NEEDED	FOR SILL	CRS	#14 X 1-1/2" PPH SMS

Approved as complying with the Florida Building Code
Date 05/12/05
NOA# 05-0317.04
Miami-Dade Product Control Division
By

Engr: DR. HUMAYOUN FAROOQ
STRUCTURES
FLA. PE # 16557
C.A.N. 3538

MAY 0 9 2005

AL-FAROOQ CORPORATION
ENGINEERS, PLANNERS & PRODUCT DESIGN
1235 SW 87 AVE
MIAMI, FLORIDA 33174
TEL (305) 264-8100 FAX. (305) 262-6978
STORE\W05-01YKK

YHS 50 TU ALUM STOREFRONT SYSTEM (S.M.I.)

YKK AP AMERICA INC.
332 FIRETOWER ROAD
DUBLIN, GEORGIA 31021
TEL(478) 277-1955 FAX(478) 277-1978

revisions:

no	date	by	description

date: 01-10-05
scale: 1/2" = 1"
dr. by: HAMID
chk. by:

drawing no.
W05-01

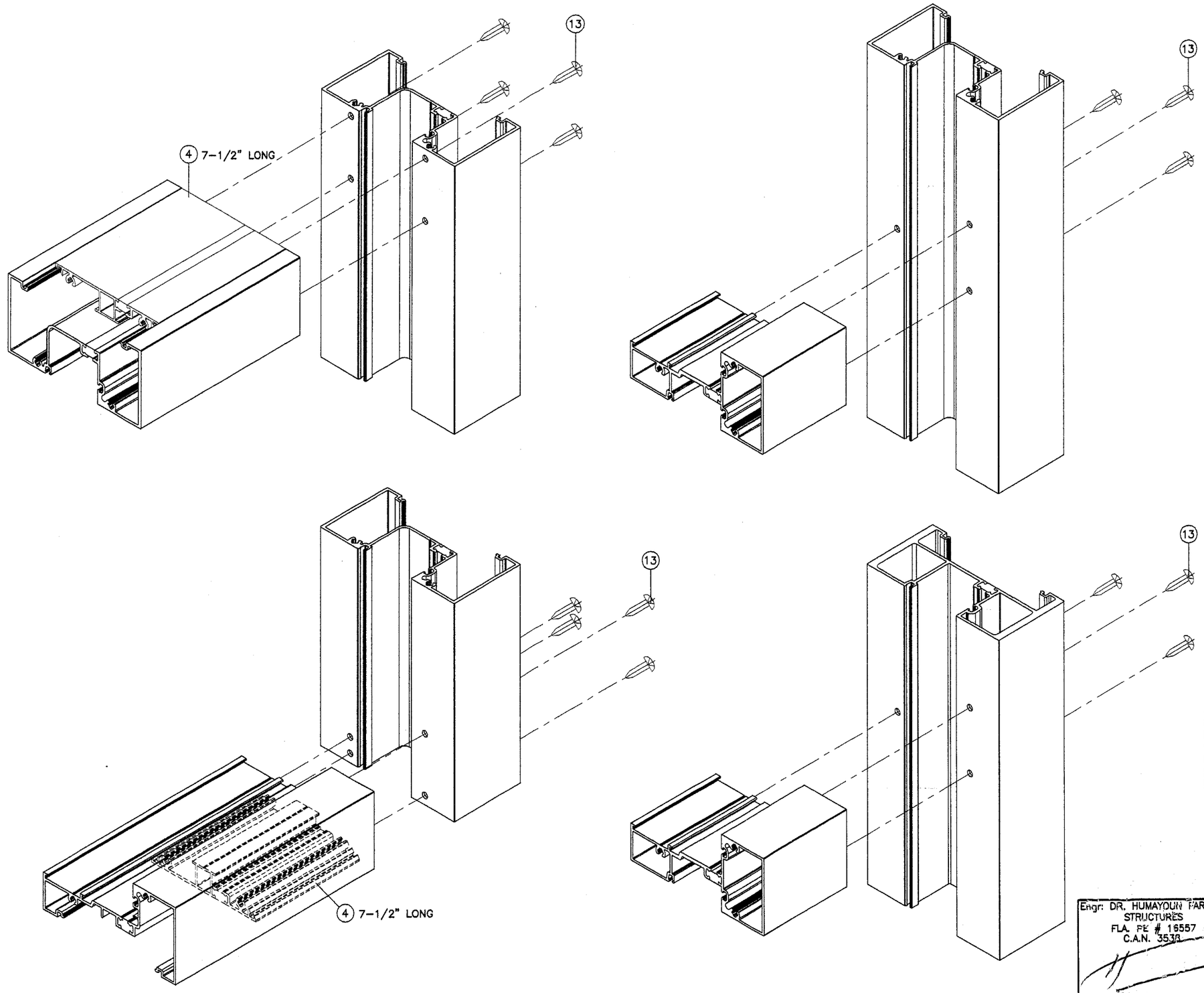

FRAME CORNERS

Approved as complying with the Florida Building Code
Date 05/12/05
NOA# 05-0317.02
Miami-Dade Product Control Division
By

Engr: DR. HUMAYOUN FAROOQ
STRUCTURES
FLA. PE # 16557
C.A.N. 3538

MAR 0 9 2005

YHS 50 TU ALUM STOREFRONT SYSTEM (S.M.I.)

YKK ap™

YKK AP AMERICA INC.
332 FIRETOWER ROAD
DUBLIN, GEORGIA 31021
TEL(478) 277-1955 FAX(478) 277-1978

AL-FAROOQ CORPORATION
ENGINEERS, PLANNERS & PRODUCT DESIGN
1235 SW 87 AVE
MIAMI, FLORIDA 33174
TEL. (305) 264-8100 FAX. (305) 262-6978

STORE\W05-01YKK

revisions:

no	date	by	description

date: 01-10-05
scale: 1/2" = 1"
dr. by: HAMID
chk. by:

drawing no.
W05-01

sheet 8 of 8