L MIAMI-DADE
BUILDING CODE COMPLIANCE OFFICE (BCCO)
PRODUCT CONTROL DIVISION

MIAMI-DADE COUNTY, FLORIDA
METRO-DADE FLAGLER BUILDING
140 WEST FLAGLER STREET, SUITE 1603
MIAMI, FLORIDA 33130-1563
(305) 375-2901 FAX (305) 375-2908

NOTICE OF ACCEPTANCE (NOA)

Premix Marbletite Mfg, Co. Inc.
1259 NW 21 Street.
Pompano Beach FL 33069

SCOPE: This NOA is being issued under the applicable rules and regulations governing the use of construction materials. The documentation submitted has been reviewed by Miami-Dade County Product Control Division and accepted by the Board of Rules and Appeals (BORA) to be used in Miami Dade County and other areas where allowed by the Authority Having Jurisdiction (AHJ).

This NOA shall not be valid after the expiration date stated below. The Miami-Dade County Product Control Division (In Miami Dade County) and/or the AHJ (in areas other than Miami Dade County) reserve the right to have this product or material tested for quality assurance purposes. If this product or material fails to perform in the accepted manner, the manufacturer will incur the expense of such testing and the AHJ may immediately revoke, modify, or suspend the use of such product or material within their jurisdiction. BORA reserves the right to revoke this acceptance, if it is determined by Miami Dade County Product Control Division that this product or material fails to meet the requirements of the applicable building code.

This product is approved as described herein, and has been designed to comply with the Florida Building Code including the High Velocity Hurricane Zone.

DESCRIPTION: Premix Marbletite Concentrate over 1/2" Gypsum Sheathing

APPROVAL DOCUMENT: Drawing No.1364, Sheets 1 through 4 of 4, titled "P. M. Concentrate Single Coat Stucco System over 1/2" Gypsum Sheathing" dated 10/19/05, with no revisions, prepared by W.W. Schaefer Engineering & Consulting PA. signed and sealed by W.W. Schaefer PE., bearing the Miami-Dade County Product Control Approval stamp with the NOA number and approval date by the Miami-Dade County Product Control Division.

MISSILE IMPACT RATING: Small Missile.

LABELING: Each component shall bear a permanent label with the manufacturer's name or logo, city, state and following statement: "Miami-Dade County Product Control Approved or MDCPCA", unless otherwise noted herein.

RENEWAL of this NOA shall be considered after a renewal application has been filed and there has been no change in the applicable building code negatively affecting the performance of this product.

TERMINATION of this NOA will occur after the expiration date or if there has been a revision or change in the materials, use and/or manufacture of the product or process. Misuse of this NOA as an endorsement of any product, for sales, advertising or any other purposes shall automatically terminate this NOA. Failure to comply with any section of this NOA shall be cause for its termination and removal.

ADVERTISEMENT: The NOA number preceded by the words Miami-Dade County, Florida, and followed by the expiration date may be displayed in advertising literature. If any portion of the NOA is displayed, then it shall be done in its entirety.

INSPECTION: A copy of this entire NOA shall be provided to the user by the manufacturer or its distributors and shall be available for inspection at the job site at the request of the Building Official.

This NOA consists of this page, evidence page as well as the approval document mentioned above.

The submitted documentation was reviewed by **Candido F. Font PE.**

12/08/05

PRODUCT CONTROL ACCEPTED

Premix Marbletite Mfg. Co. Inc.

NOTICE OF ACCEPTANCE: EVIDENCE SUBMITTED

A. DRAWINGS

1. Drawing No. **1364**, Sheets 1 through 4 of 4, titled "P. M. Concentrate Single Coat Stucco System Over 1/2" Gypsum Sheathing" dated 10/19/05, with no revisions, prepared by W. W. Schaefer Engineering & Consulting PA signed and sealed by W. W. Schaefer, PE.

B. TESTS

1. Test report on Uniform Static Air Pressure Test per TAS 202, Small Missile Impact Test per TAS 201 and Cyclic Load Pressure Test Per PA 203, of "Stucco Wall Panels " prepared by Hurricane Test Laboratory, LLC., report No. 0235-0508-04 specimen # S1-1, S 1-2, S2-1 & S4-1, signed and sealed by V. J. Abraham, PE, on 10/28/04
2. Test report on Uniform Static Load Test per TAS 202, Small Missile Impact Test per TAS 201 and Cyclic Load Pressure per TAS 203 of "Stucco Wall Panels", prepared by Hurricane Test Laboratory, LLC., report No. 0235-0508-04 specimen# S2-2, S2-3, S3-1 & S3-2, signed and sealed by V. J. Abraham, PE, on 12/23/04

C. QUALITY ASSURANCE

1. Building Code Compliance Office.

D. MATERIAL CERTIFICATIONS

1. ICC ES Legacy Report No. 9915C issued on 03/01/04, interim revised on 10/01/04 by ICC Evaluation Service Inc.

E. STATEMENTS

1. Code compliance letter prepared by W.W. Schaefer Engineering & Consulting, PA, signed and sealed by W. W. Schaefer PE. on 01/19/05.
2. No financial interest letter prepared by W. W. Schaefer Engineering & Consulting PA signed and sealed by W. W. Schaefer PE, on 01/19/05.

12/08/05

Candido F. Font PE.
Sr. Product Control Examiner
NOA No: 05-0324.05
Expiration Date: December 8, 2010
Approval Date: December 8, 2005

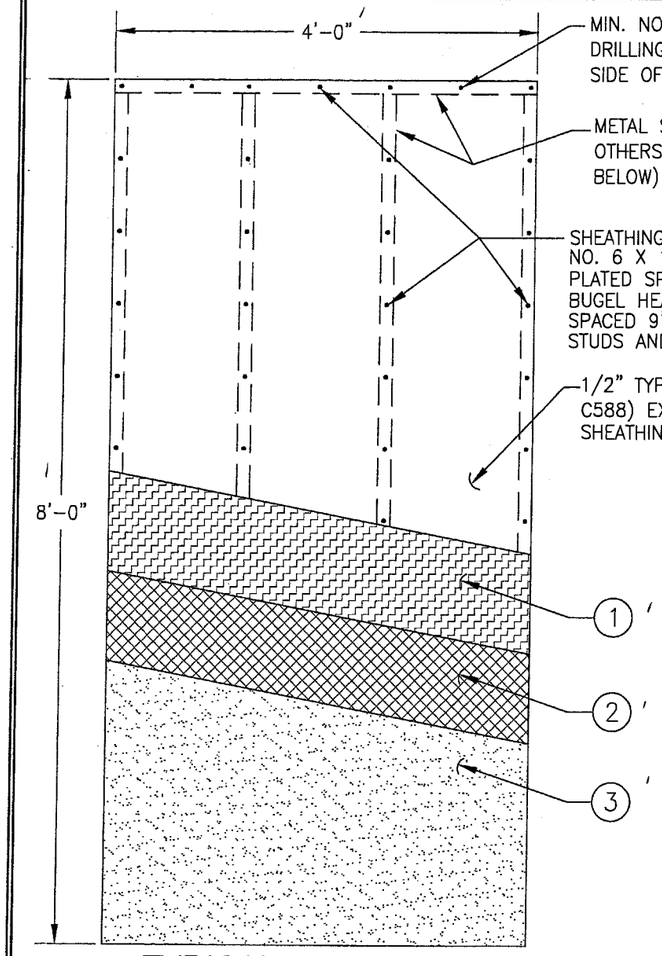

TYPICAL ELEVATION

DIMENSIONS SHOWN ARE TESTED DIMENSIONS

Approved as complying with the Florida Building Code
Date 12/08/05
NOA# 05-0324.05
Miami Dade Product Control Division
By

ALLOWABLE DESIGN PRESSURE	
POSITIVE	NEGATIVE
80 PSF	80 PSF
SMALL MISSILE IMPACT APPROVED	

GENERAL NOTES:

1. THIS SYSTEM HAS BEEN DESIGNED IN ACCORDANCE WITH THE FLORIDA BUILDING CODE (FBC) 2004 FOR USE IN HIGH VELOCITY HURRICANE ZONES (HVHZ)
2. THIS SYSTEM HAS BEEN TESTED IN ACCORDANCE WITH PROTOCALS TAS 201. TAS 202 & TAS 203 FOR SMALL MISSLE IMPACT, AIR, WATER, STRUCTURAL & CYCLIC LOAD TESTING.
3. THIS SYSTEM SHALL BE APPLIED BY A LICENSED PLASTERING CONTRACTOR FOLLOWING THIS NOTICE OF ACCEPTANCE, THE RECOMMENDATIONS OF PREMIX MARBLETITE, AND SECTION 2512 OF THE 2004 FLORIDA BUILDING CODE.
4. THE ENGINEER AND/OR ARCHITECT OF RECORD FOR EACH PROJECT USING THIS SYSTEM SHALL DESIGN THE SUPPORTING STUD FRAMING, SHEATHING & THEIR ATTACHMENTS AS REQUIRED TO MEET CODE AND SUPPORT REQUIRED DESIGN PRESSURES AND TO INSURE CONFORMANCE WITH ALL REQUIRED STUD DEFLECTION & STRESS LIMITATIONS AS REQUIRED BY ALL GOVERNING CODES & THIS DOCUMENT.
5. MAXIMUM ALLOWABLE DEFLECTION FOR THIS ASSEMBLY SHALL BE LIMITED BY THE LESSOR OF L/240 OR AS REQUIRED BY CODE.
6. THIS SYSTEM IS A SMALL MISSILE IMPACT APPROVED SYSTEM PROVIDING IT IS INSTALLED OVER THE 1/2" GYPSUM SHEATHING SPECIFIED.
7. THIS STUCCO SYSTEM SHALL NOT BE CONSIDERED TO OR BE USED FOR TRANSFER OF DIAPHRAM ACTION OF WALL TO STRUCTURE.
8. DETAILS ON SHEETS 2 & 3 ARE TYPICAL AND SHOW INTENT TO PREVENT WATER INFILTRATION INTO AND BEHIND THIS SYSTEM. ALTERNATE DETAILING AND SPECIFIC CONDITIONS NOT COVERED BY THE TYPICAL DETAILS ARE THE RESPONSIBILITY OF THE LICENSED DESIGN PROFESSIONAL IN CONSULTATION WITH PREMIX-MARBLETITE.
9. THIS APPROVAL DOES NOT INCLUDE HORIZONTAL USE OF THIS SYSTEM. IT ONLY INCLUDES WALL APPLICATION.
10. INCREASE OF STRESSES AND/OR ALLOWABLE ANCHOR LOADS DUE TO WIND PRESSURE HAVE NOT BEEN USED WITH THIS APPROVAL EXCEPT FOR WOOD FASTENERS.

MATERIAL LIST

NUMBER	ITEM	SUPPLIER	NOTES
1	MOISTURE BARRIER (ASTM D226)	N/A	STANDARD 15 LB. ASPHALT ROOFING FELT SECURED TO GYPSUM BOARDS WITH 1 1/4" STAPLES AT 16" O.C. IN BOTH DIRECTIONS. OVERLAP SHALL BE MINIMUM OF 2".
2	METAL LATH (ASTM C847)	N/A	GALVANIZED 2.5 LB/SQ. YD. METAL LATH IN ACCORDANCE WITH 2004 FLORIDA BUILDING CODE SECTION 2510. FASTEN TO SHEATHING & STUDS WITH #6 x 1 1/4" ZINK PLATED SPACED THREADED SCREWS SPACED MAX. 6" O.C. ALONG EACH STUD & PERIMETER FRAMING MEMBER.
3	MIN. 1/2" THICK P.M. CONCENTRATE FIBER REINFORCED STUCCO APPLIED WITH TROWEL	PREMIX MARBLETITE	STUCCO IN ACCORDANCE WITH FLORIDA BUILDING CODE SECTION 2512 & ASTM C926 PREMIXED & FACTORY BLENDED COMPOUND WITH CHOPPED TYPE "E" GLASS OR POLYPROPYLENE FIBERS. COMPOUND IS MIXED WITH WATER & SAND ON THE JOB SITE AT A RATIO OF ONE(1) 80 LB. BAG OF COMPOUND TO 240 LBS OF SAND AND 5 TO 6 GALLONS OF WATER.

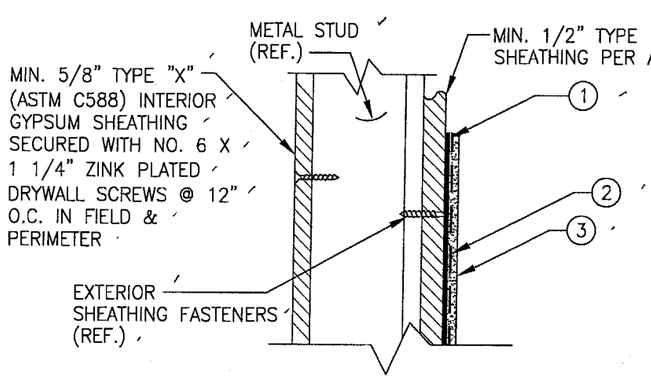

METAL STUD

TYPICAL SECTION

FRAMING NOTES:

1. STEEL STUD (ASTM C955) FRAMING SHALL BE MIN. 3 5/8" X 20 GA. STUDS WITH 1 1/2" FLANGES AND 1/2" RETURNS (Fy = 33 KSI MIN.).
2. ALL STEEL TRACK (ASTM C955) SHALL BE MIN. 3 5/8" X 20 GA. (Fy = 33 KSI MIN.) WITH MIN. 1 1/4" FLANGES.
3. ALL STUD FRAMING SHALL BE AT MAX. 16" O.C.

DRAWN BY: W.R.M.	CHECKED BY: W.W.S.
PLOT: 1=16	DATE: 10/19/05

NO.	REVISION DESCRIPTION	BY	DATE

DRAWING TITLE
P.M. CONCENTRATE SINGLE COAT STUCCO SYSTEM OVER 1/2" GYPSUM SHEATHING

MANUFACTURER
PREMIX MARBLETITE MFG. CO
ARCHITECTURAL FINISHING SYSTEMS
1259 N.W. 21ST STREET
POMPANO BEACH, FL 33069
800-432-5097

CONSULTANTS
W. W. SCHAEFER ENGINEERING & CONSULTING, P.A.
600 SANDTREE DRIVE; SUITE 203B
PALM BEACH GARDENS, FL 33403
PHONE: 561-775-4902 FAX: 561-775-4903

CERTIFICATION
OCT 31 2005
WARREN W. SCHAEFER, P.E.
P.E. NO. 44135

DRAWING NO. 1364
REV.
SHEET NO. 1 OF 4

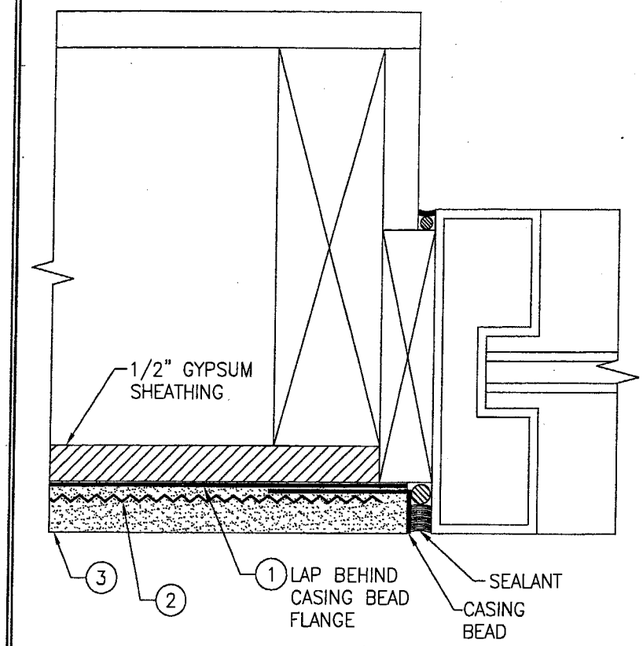

TYPICAL WINDOW/DOOR JAMB & SILL FLUSH MOUNT DETAIL WITHOUT NAIL FIN

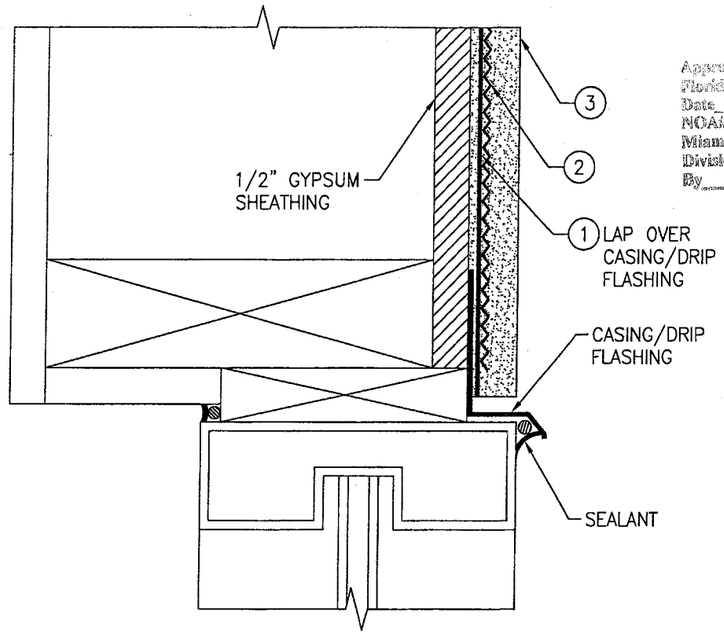

TYPICAL WINDOW/DOOR HEAD FLUSH MOUNT DETAIL WITHOUT NAIL FIN

Approved as complying with the Florida Building Code
Date 12/08/05
NOA# 05-0324.05
Miami Dade Permit Control Division
By

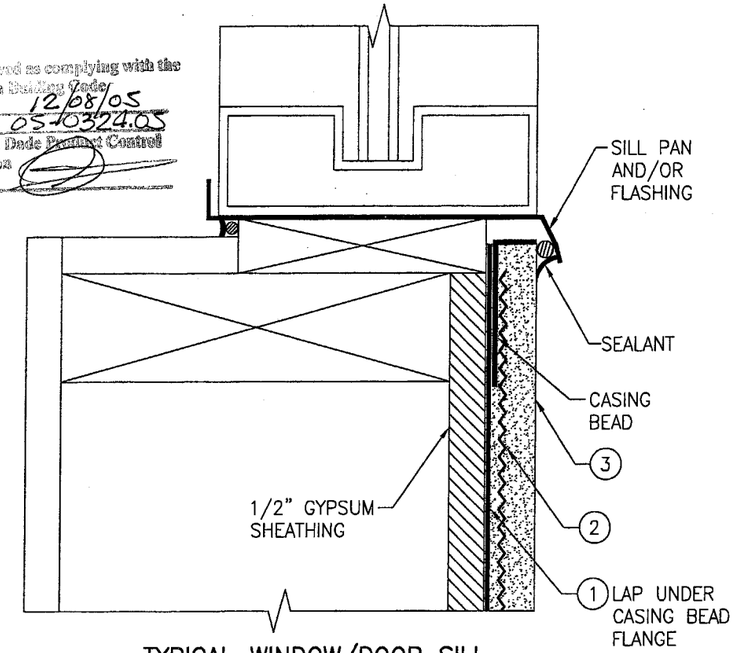

TYPICAL WINDOW/DOOR SILL FLUSH MOUNT DETAIL WITHOUT NAIL FIN

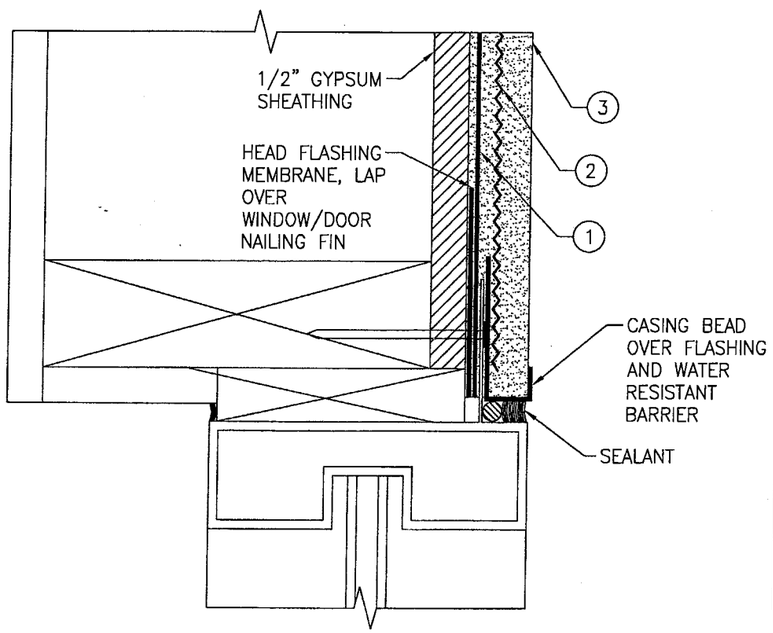

TYPICAL WINDOW/DOOR HEAD & JAMB FLUSH MOUNT DETAIL WITHT NAIL FIN

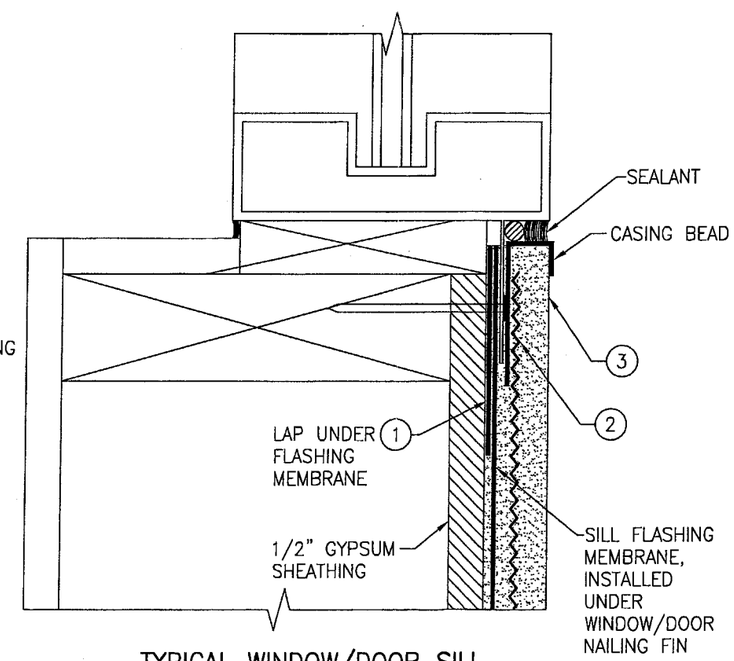

TYPICAL WINDOW/DOOR SILL FLUSH MOUNT DETAIL WITH NAIL FIN

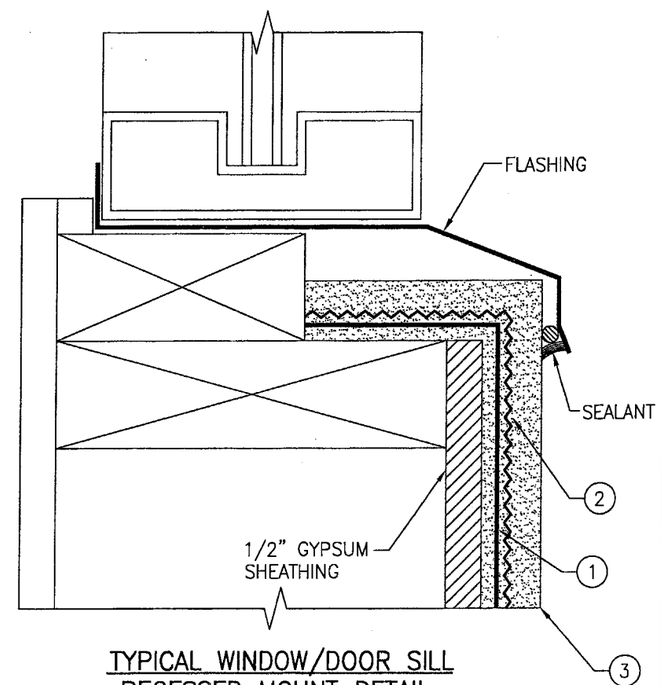

TYPICAL WINDOW/DOOR SILL RECESSED MOUNT DETAIL WITHOUT NAIL FIN

DRAWN BY: W.R.M.	CHECKED BY: W.W.S.
PLOT: 1=16	DATE: 10/19/05

NO.	REVISION DESCRIPTION	BY	DATE

DRAWING TITLE
P.M. CONCENTRATE SINGLE COAT STUCCO SYSTEM OVER 1/2" GYPSUM SHEATHING

MANUFACTURER
PREMIX MARBLETITE MFG. CO
ARCHITECTURAL FINISHING SYSTEMS
1259 N.W. 21ST STREET
POMPANO BEACH, FL 33069
800-432-5097

CONSULTANTS
W. W. SCHAEFER ENGINEERING & CONSULTING, P.A.
600 SANDTREE DRIVE; SUITE 203B
PALM BEACH GARDENS, FL 33403
PHONE: 561-775-4902 FAX: 561-775-4903

CERTIFICATION
OCT 31 2005
WARREN W. SCHAEFER, P.E.
P.E. NO. 44135

DRAWING NO. 1364 REV.

SHEET NO. 2 OF 4

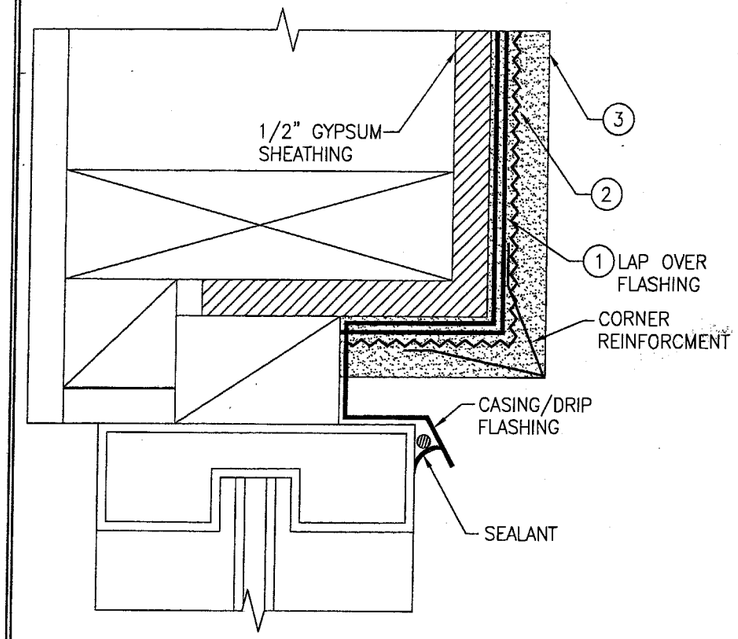

TYPICAL WINDOW/DOOR HEAD & JAMB RECESSED MOUNT DETAIL WITHOUT NAIL FIN

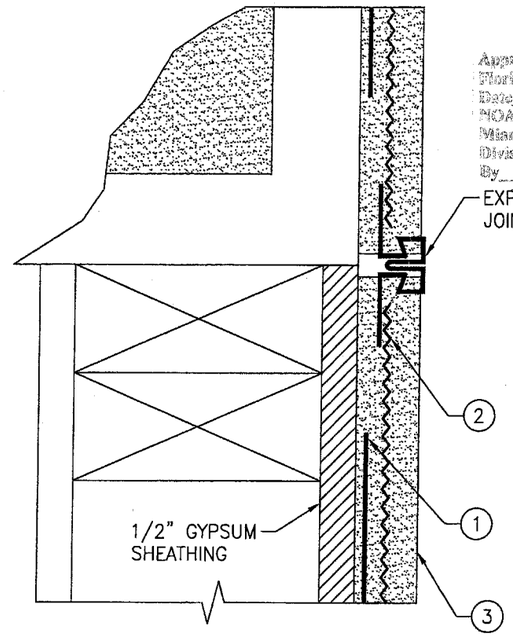

TYPICAL VERTICAL EXPANSION JOINT

Approved as complying with the Florida Building Code
Date 12/08/05
NOA# 05-0324.05
Miami Dade Product Control Division
By

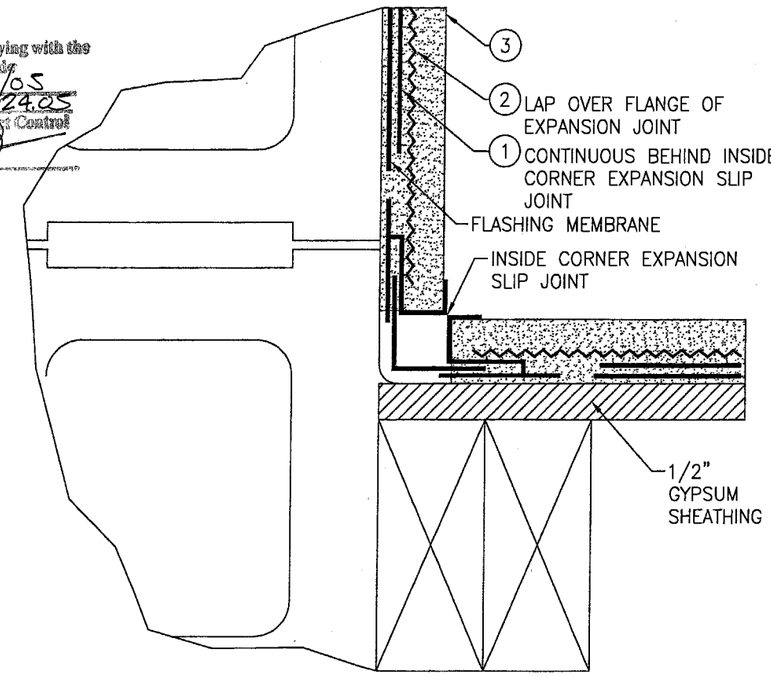

TYPICAL INSIDE CORNER EXPANSION JOINT DETAIL 1

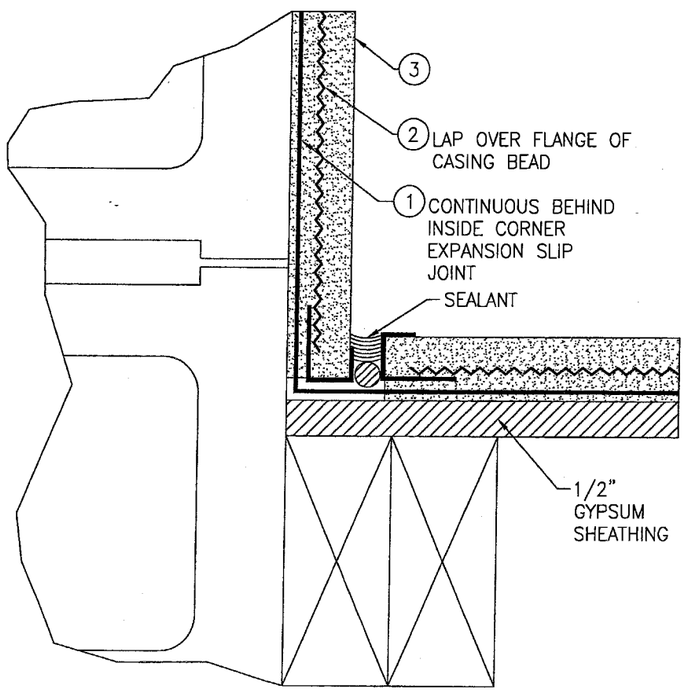

TYPICAL INSIDE CORNER EXPANSION JOINT DETAIL 2

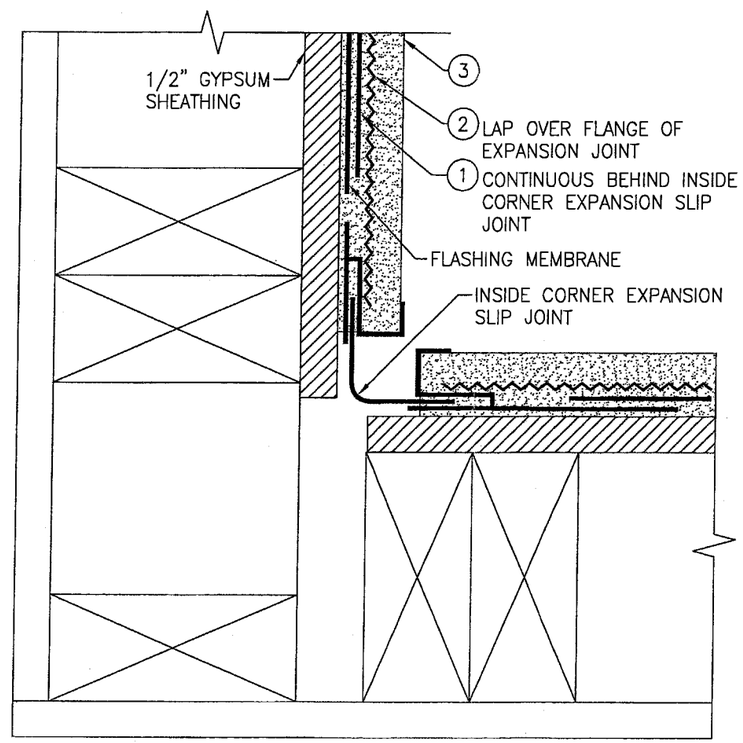

TYPICAL INSIDE CORNER EXPANSION JOINT DETAIL 3

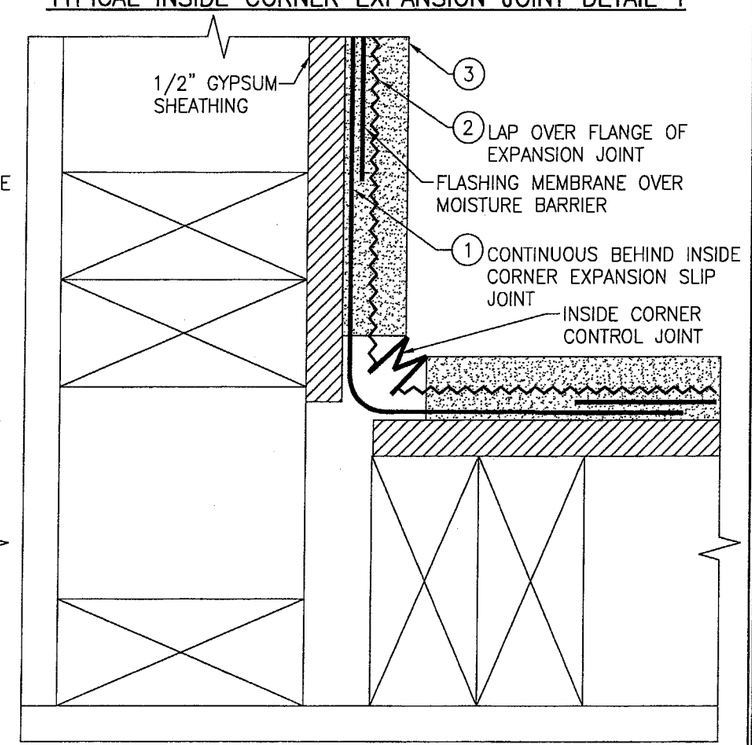

TYPICAL INSIDE CORNER CONTROL JOINT

DRAWN BY: W.R.M.	CHECKED BY: W.W.S.
PLOT: 1=16	DATE: 10/19/05

NO.	REVISION DESCRIPTION	BY	DATE

DRAWING TITLE
P.M. CONCENTRATE SINGLE COAT STUCCO SYSTEM OVER 1/2" GYPSUM SHEATHING

MANUFACTURER
PREMIX MARBLETITE MFG. CO
ARCHITECTURAL FINISHING SYSTEMS
1259 N.W. 21ST STREET
POMPANO BEACH, FL 33069
800-432-5097

CONSULTANTS
W. W. SCHAEFER ENGINEERING & CONSULTING, P.A.
600 SANDTREE DRIVE; SUITE 203B
PALM BEACH GARDENS, FL 33403
PHONE: 561-775-4902 FAX: 561-775-4903

CERTIFICATION
OCT 31 2005
WARREN W. SCHAEFER, P.E.
P.E. NO. 44135

DRAWING NO. 1364 | REV.

SHEET NO. 3 OF 4

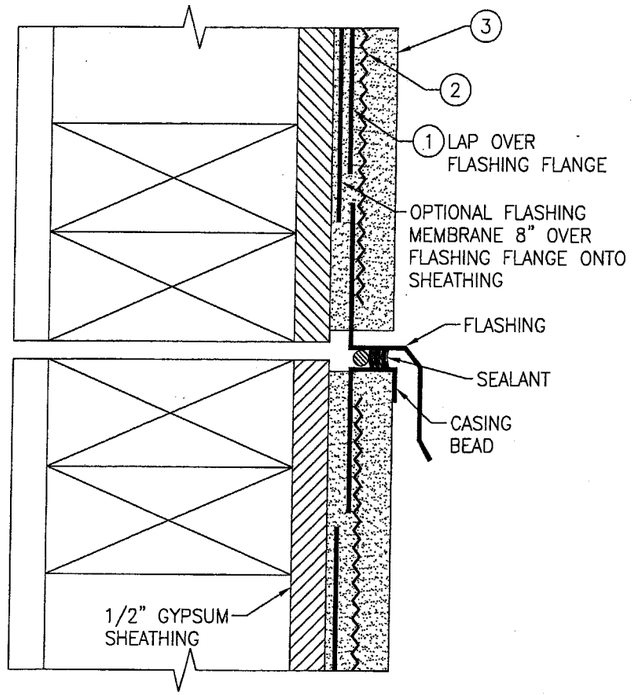

TYPICAL HORIZONTAL EXPANSION JOINT

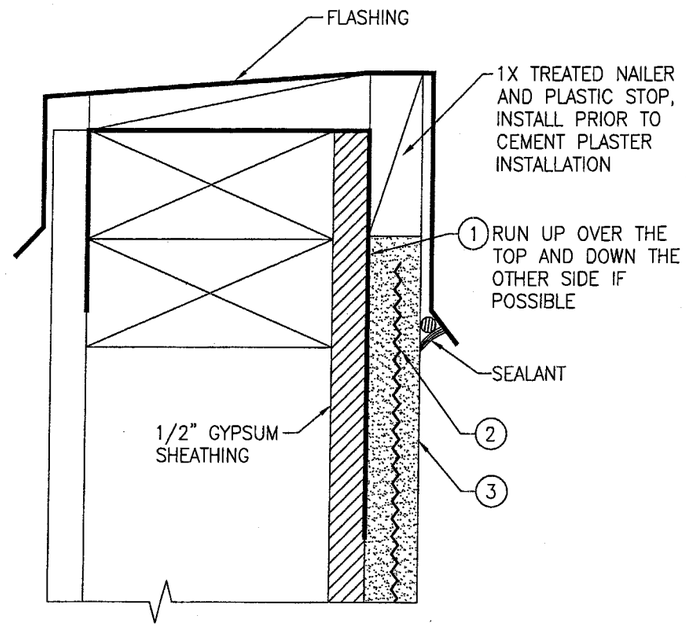

TYPICAL PARAPET COPING DETAIL

Approved as complying with the Florida Building Code
Date 12/08/05
NOA# 05-0324.05
Miami Dade Product Control Division
By

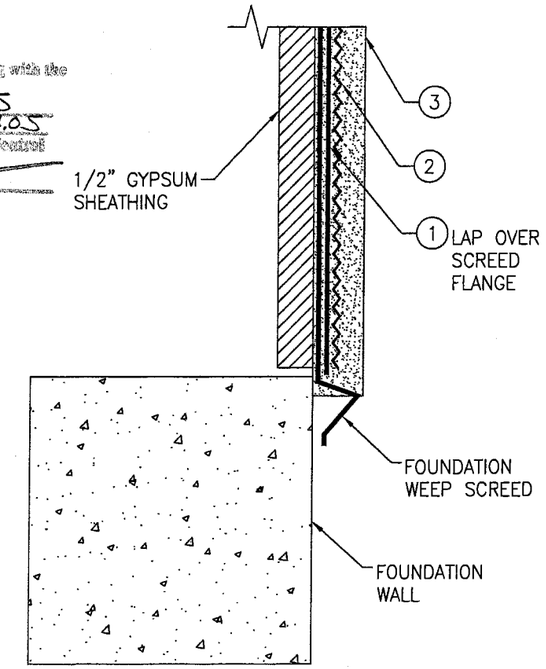

TYPICAL WEEP SCREED FOUNDATION AT CONCRETE

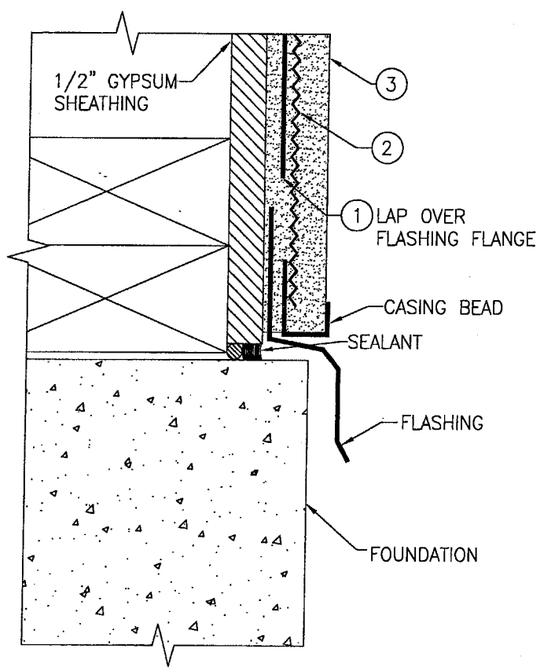

TYPICAL TERMINATION AT FOUNDATION

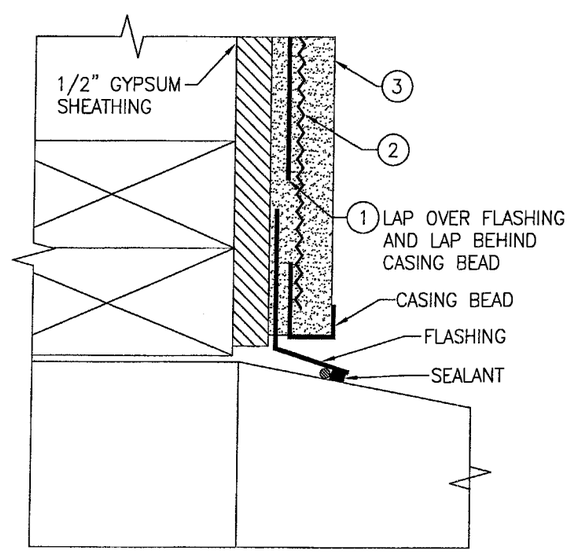

TYPICAL TERMINATION AT SLAB/SIDEWALK

DRAWN BY: W.R.M.	CHECKED BY: W.W.S.
PLOT: 1=16	DATE: 10/19/05

NO.	REVISION DESCRIPTION	BY	DATE

DRAWING TITLE
P.M. CONCENTRATE SINGLE COAT STUCCO SYSTEM OVER 1/2" GYPSUM SHEATHING

MANUFACTURER
PREMIX MARBLETITE MFG. CO
ARCHITECTURAL FINISHING SYSTEMS
1259 N.W. 21ST STREET
POMPANO BEACH, FL 33069
800-432-5097

CONSULTANTS
W. W. SCHAEFER ENGINEERING & CONSULTING, P.A.
600 SANDTREE DRIVE; SUITE 203B
PALM BEACH GARDENS, FL 33403
PHONE: 561-775-4902 FAX: 561-775-4903

CERTIFICATION
OCT 31 2005
WARREN W. SCHAEFER, P.E.
P.E. NO. 44135

DRAWING NO. 1364
REV.
SHEET NO. 4 OF 4