MIAMI-DADE COUNTY

BUILDING CODE COMPLIANCE OFFICE (BCCO)
PRODUCT CONTROL DIVISION

MIAMI-DADE COUNTY, FLORIDA
METRO-DADE FLAGLER BUILDING
140 WEST FLAGLER STREET, SUITE 1603
MIAMI, FLORIDA 33130-1563
(305) 375-2901 FAX (305) 375-2908
www.buildingcodeonline.com

NOTICE OF ACCEPTANCE (NOA)

Lawson Industries Inc.
8501 N. W. 90 Street
Medley, FL 33166

SCOPE:

This NOA is being issued under the applicable rules and regulations governing the use of construction materials. The documentation submitted has been reviewed by Miami-Dade County Product Control Division and accepted by the Board of Rules and Appeals (BORA) to be used in Miami Dade County and other areas where allowed by the Authority Having Jurisdiction (AHJ).

This NOA shall not be valid after the expiration date stated below. The Miami-Dade County Product Control Division (In Miami Dade County) and/or the AHJ (in areas other than Miami Dade County) reserve the right to have this product or material tested for quality assurance purposes. If this product or material fails to perform in the accepted manner, the manufacturer will incur the expense of such testing and the AHJ may immediately revoke, modify, or suspend the use of such product or material within their jurisdiction. BORA reserves the right to revoke this acceptance, if it is determined by Miami-Dade County Product Control Division that this product or material fails to meet the requirements of the applicable building code.

This product is approved as described herein, and has been designed to comply with the Florida Building Code, including High Velocity Hurricane Zone of the Florida Building Code.

DESCRIPTION: Series SH-7500 Aluminum Single Hung Windows (Flange-mounted)

APPROVAL DOCUMENT: Drawing No. **L7500-0401**, titled "Series SH-7500 Single Hung Flanged Window", dated 09/20/04 last revised on August 11, 2005, sheets 1 through 5 of 5, prepared by manufacturer, signed and sealed by Thomas J. Sotos, P.E., bearing the Miami-Dade County Product Control Approval stamp with the Notice of Acceptance number and approval date by the Miami-Dade County Product Control Division.

MISSILE IMPACT RATING: None, Approved Hurricane Protection System, complying with FBC as applicable zone is required for installation of the units.

LABELING: Each unit shall bear a permanent label with the manufacturer's name or logo, city, state and following statement: "Miami-Dade County Product Control Approved", unless otherwise noted herein.

RENEWAL of this NOA shall be considered after a renewal application has been filed and there has been no change in the applicable building code negatively affecting the performance of this product.

TERMINATION of this NOA will occur after the expiration date or if there has been a revision or change in the materials, use, and/or manufacture of the product or process. Misuse of this NOA as an endorsement of any product, for sales, advertising or any other purposes shall automatically terminate this NOA. Failure to comply with any section of this NOA shall be cause for termination and removal of NOA.

ADVERTISEMENT: The NOA number preceded by the words Miami-Dade County, Florida, and followed by the expiration date may be displayed in advertising literature. If any portion of the NOA is displayed, then it shall be done in its entirety.

INSPECTION: A copy of this entire NOA shall be provided to the user by the manufacturer or its distributors and shall be available for inspection at the job site at the request of the Building Official.
This NOA, consists of this page 1 and evidence pages E-1, as well as, approval document mentioned above.
The submitted documentation was reviewed by **Ishaq I. Chanda, P. E.**

PRODUCT CONTROL ACCEPTED

NOA No 05-0324.07
Expiration Date: September 01, 2010
Approval Date: September 01, 2005

8/12/15

Lawson Industries Industries.

NOTICE OF ACCEPTANCE: EVIDENCE SUBMITTED

A. DRAWINGS

1. Manufacturer's die drawings and sections.
2. Drawing No. **L7500-0401**, titled "Series SH-7500 Single Hung Flanged Window", dated 09/20/04 last revised on August 11, 2005, sheets 1 through 5 of 5, prepared by manufacturer, signed and sealed by Thomas J. Sotos, P.E

B. TESTS

1. Test reports on 1) Air Infiltration Test, per FBC, TAS 202-94
2) Uniform Static Air Pressure Test, Loading per FBC TAS 202-94
3) Water Resistance Test, per FBC, TAS 202-94
4) Large Missile Impact Test per FBC, TAS 201-94
5) Cyclic Wind Pressure Loading per FBC, TAS 203-94
6) Forced Entry Resistant test per TAS202-94 & AAMA 1302.5

Along with marked-up drawings and installation diagram of aluminum single hung windows (Fin/Flange mounted), prepared by Fenestration Testing Laboratory, Inc., Test Report No. **FTL-4324 (04112), 4350 (04117), 4346 (04116), 4363 (04120), 4323 (04111), 4406 (04189 all dated November 08, 2004 and 4405 (04190)** dated November 12 2004, signed and sealed by Edmundo Largaespada, P.E.

C. CALCULATIONS

1. Anchor Calculations and structural analysis, prepared by Lawson Industries, Inc., dated March 11, 2005 and last revised on July 21, 2005, signed and sealed by Thomas J. Sotos, P.E.

D. MATERIAL CERTIFICATIONS

1. None

E. STATEMENTS

1. Statement letter of conformance and "No financial interest", dated 01-15-2005 and 11-15-2004 respectively, signed and sealed by Thomas J. Sotos, P.E.
2. Laboratory compliance letter, as part of the above referenced test reports, issued by Fenestration Testing lab.

F. OTHER

1. Test proposal submitted by Lawson Industries dated February, 11, 2003, approved by BCCO on February 13, 2003.
2. Product complies with FBC-2004.

Ishaq I. Chanda

Ishaq I. Chanda, P.E.
Product Control Examiner
NOA No 05-0324.07
Expiration Date: September 01, 2010
Approval Date: September 01, 2005

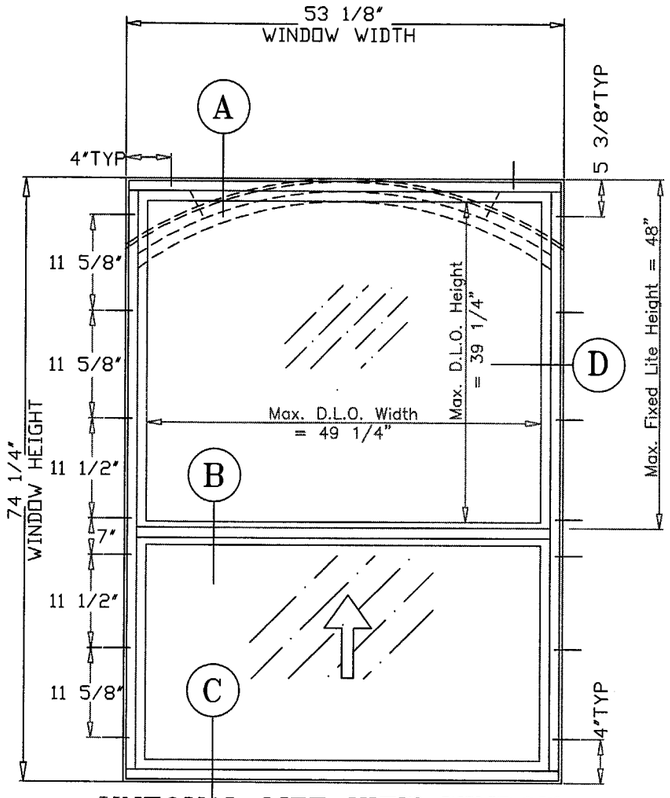

UNEQUAL LITE VIEW WINDOW ELEVATION

(SEE TABLE V-1 & V-2 FOR DESIGN PRESSURE)

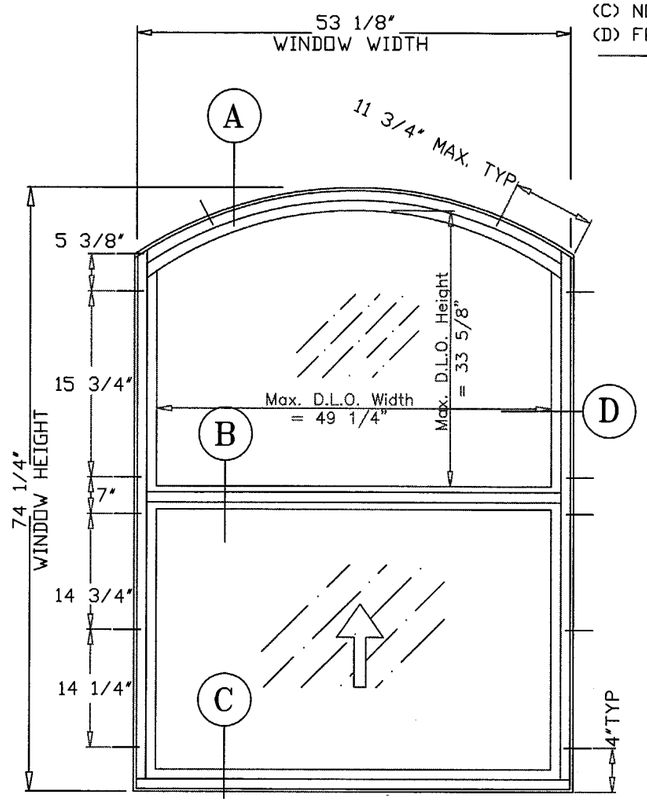

RADIUS HEAD EQUAL LITE WINDOW ELEVATION

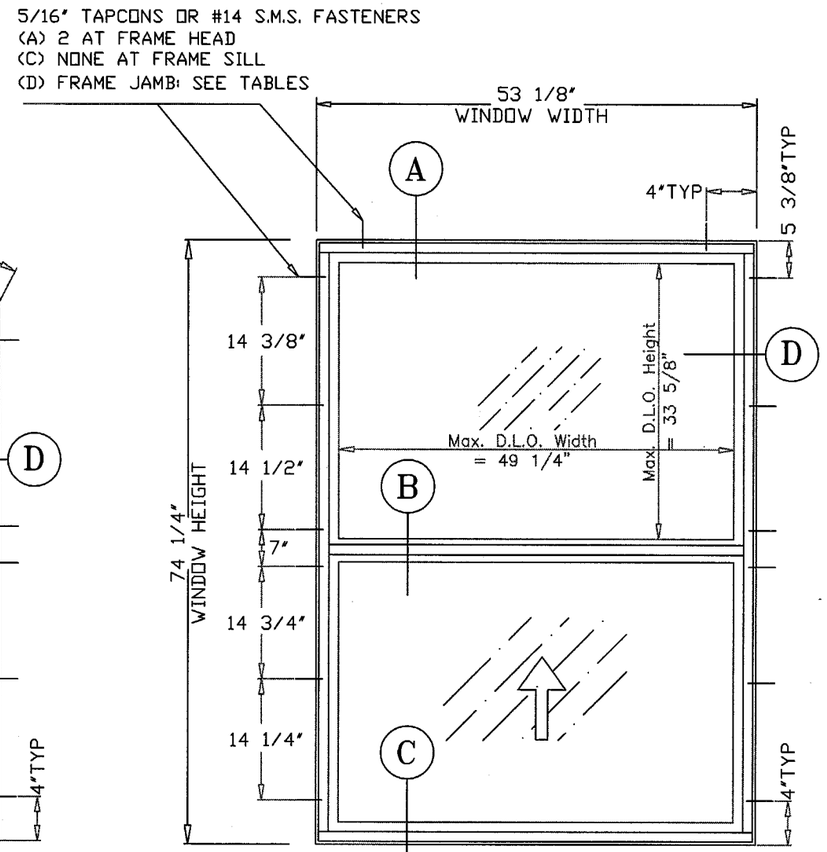

EQUAL LITE WINDOW ELEVATION

SERIES-7500 SINGLE HUNG WINDOW - FLANGE FRAME - NON-IMPACT

Notes

1.) THIS WINDOW SYSTEM IS DESIGNED AND TESTED TO COMPLY WITH THE REQUIREMENTS OF THE 2004 FLORIDA BUILDING CODE AND ASTM 1300-94. THIS PRODUCT IS NOT IMPACT RESISTANT. WINDOWS ARE TO BE PROTECTED WITH MIAMI-DADE COUNTY APPROVED IMPACT RESISTANT SHUTTERS.

2.) 1 X OR 2 X WOOD BUCKS SHALL BE INSTALLED AND ANCHORED SO THAT THE BUILDING RESISTS THE SUPERIMPOSED LOADS IN ACCORDANCE WITH REQUIREMENTS OF 2004 F.B.C. & TO BE REVIEWED BY BUILDING OFFICIAL.

3.) ANCHORS SHOWN ABOVE ARE AS PER TEST UNITS. INTERIOR ANCHOR SPACINGS WILL VARY WITH UNIT DIMENSIONS, AND THE NUMBER OF ANCHORS REQUIRED, AS SPECIFIED ON THE LOAD TABLES.

4.) ANCHOR CONDITIONS NOT DESCRIBED IN THESE DRAWING'S ARE TO BE ENGINEERED ON A SITE SPECIFIC BASIS, UNDER SEPARATE APPROVAL AND TO BE REVIEWED BY BUILDING OFFICIAL.

5.) RADIUS HEAD WINDOWS ARE QUALIFIED FOR USE WITH ALL GLASS TYPES TABULATED HEREIN.

6.) VIEW WINDOWS ARE QUALIFIED FOR USE WITH 3/16" ANNEALED & 3/16" TEMPERED GLASS USING THE HEAVY DUTY MEETING RAIL ONLY.

7.) SEE PAGE 4 FOR LOCK OPTIONS.

WINDOWS ARE TO BE PROTECTED WITH MIAMI-DADE COUNTY APPROVED IMPACT RESISTANT SHUTTERS

Approved as complying with the Florida Building Code
Date September 01, 2005
NOA# 05-0324.07
Miami Dade Product Control Division
By Ishag I. Chanda

LAWSON INDUSTRIES, INC.
8501 N.W. 90 ST.
MEDLEY, FLORIDA 33166
PH No. (305) 696-8660

MANUFACTURER OF QUALITY ALUMINUM WINDOWS AND GLASS DOORS

SH-7500 SINGLE HUNG FLANGE WINDOW

APPROVED ELEVATIONS, CONFIGURATIONS AND NOTES

Product Reference Number: | Drawing Number: L7500-0401 | Sheet: 1 OF 5 | Revision #:

Revision Notes:

Drawn By: N. ERAZO | Date Drawn: 09/20/04

Revised By: | Date Revised:

Revision Level: | Scale:

THOMAS J. SOTOS
PROFESSIONAL ENGINEER
FL LIC. # 55225

DATE

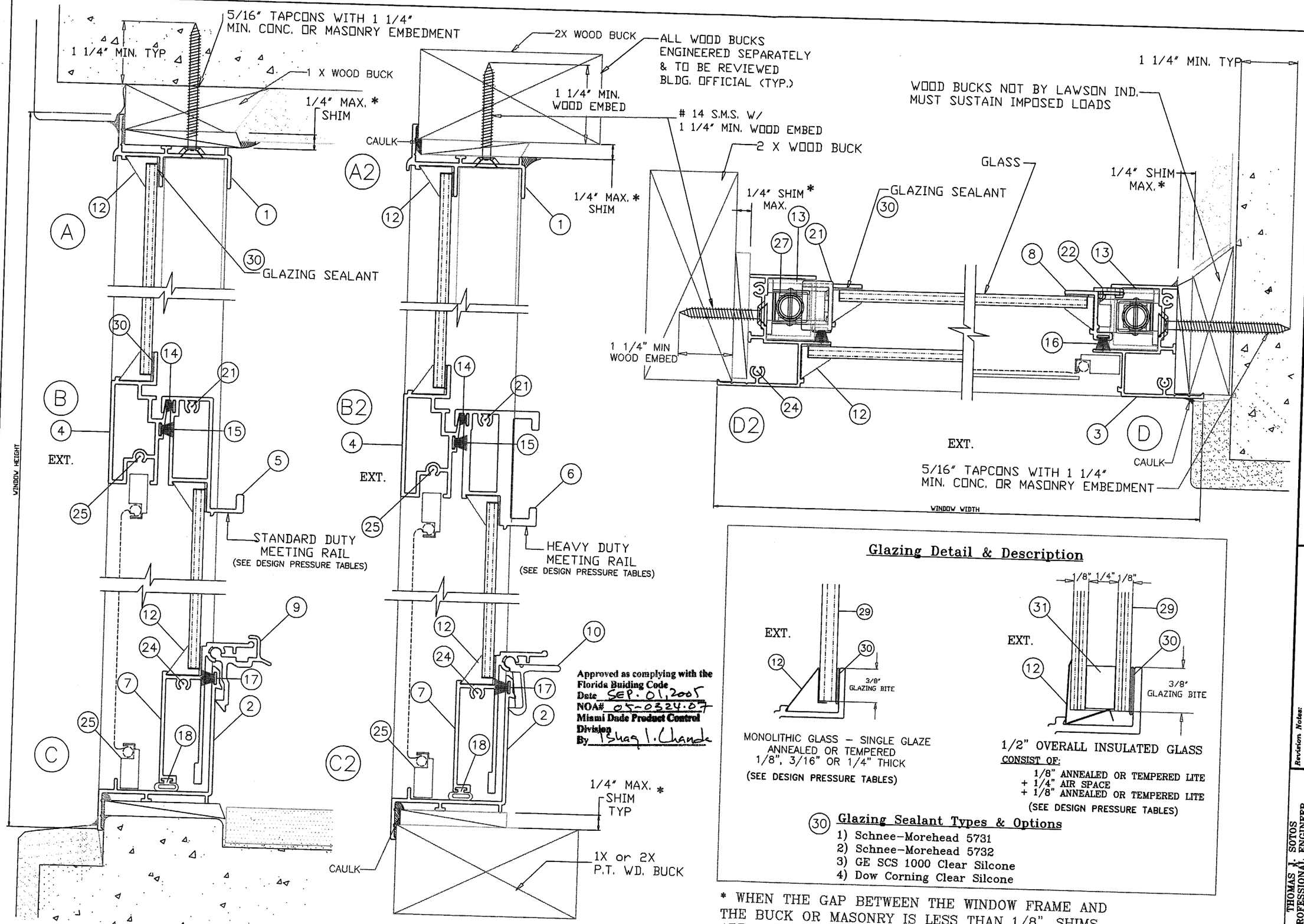

Approved as complying with the Florida Buiding Code
Date SEP. 01, 2005
NOA# 05-0324.07
Miami Dade Product Control Division
By Bhag I. Chanda

Glazing Detail & Description

MONOLITHIC GLASS – SINGLE GLAZE
ANNEALED OR TEMPERED
1/8", 3/16" OR 1/4" THICK
(SEE DESIGN PRESSURE TABLES)

1/2" OVERALL INSULATED GLASS
CONSIST OF:
1/8" ANNEALED OR TEMPERED LITE
+ 1/4" AIR SPACE
+ 1/8" ANNEALED OR TEMPERED LITE
(SEE DESIGN PRESSURE TABLES)

(30) Glazing Sealant Types & Options

1) Schnee-Morehead 5731
2) Schnee-Morehead 5732
3) GE SCS 1000 Clear Silcone
4) Dow Corning Clear Silcone

* WHEN THE GAP BETWEEN THE WINDOW FRAME AND THE BUCK OR MASONRY IS LESS THAN 1/8", SHIMS ARE NOT REQUIRED.

LAWSON INDUSTRIES, INC.
8501 N.W. 90 ST.
MEDLEY, FLORIDA 33166
PH No. (305) 696-8660

MANUFACTURER OF QUALITY ALUMINUM WINDOWS AND GLASS DOORS

SH-7500 SINGLE HUNG FLANGE WINDOW

CROSS SECTIONAL DETAILS FOR STD/HVY DUTY MEETING RAIL

Product Reference Number:	Drawing Number: L7500-0401
Sheet: 2 OF 5	Revision #:
Date Drawn: 09/20/04	Drawn By: N. ERAZO
Date Revised:	Revised By:
Scale:	Revision Level:
Revision Notes:	

THOMAS J. SOTOS
PROFESSIONAL ENGINEER
FL LIC. # 55225

DATE

7500 Non Impact Single Hung Window
Test # FTL 4346 - 1/8" Annealed

Flange Frame w/ Standard Duty Rail

Width (in)	Height (in)	P(+) psf	P(-) psf	Each Jamb Anchors	Head Anchors
19.125	26	70.0	204.4	4	2
26.5	26	70.0	137.7	4	2
37	26	70.0	90.3	4	2
53.125	26	59.0	59.0	4	2
19.125	38.375	70.0	141.0	4	2
26.5	38.375	70.0	95.0	4	2
37	38.375	62.2	62.2	4	2
53.125	38.375	42.8	42.8	4	2
19.125	50.625	70.0	100.0	5	2
26.5	50.625	70.0	77.9	5	2
37	50.625	52.5	52.5	5	2
53.125	50.625	31.4	31.4	5	2
19.125	58	70.0	85.3	5	2
26.5	58	67.4	67.4	5	2
37	58	49.9	49.9	5	2
53.125	58	31.0	31.0	5	2
19.125	63	70.0	78.5	5	2
26.5	63	61.4	61.4	5	2
37	63	47.4	47.4	5	2
53.125	63	30.4	30.4	5	2

7500 Non Impact Single Hung Window
Test # FTL 4344 - 1/4" Annealed

Pressure limited to Negative 100psf.

Flange Frame w/ Heavy Duty Rail

Width (in)	Height (in)	P(+) psf	P(-) psf	Each Jamb Anchors	Head Anchors
19.125	26	70.0	100.0	4	2
26.5	26	70.0	100.0	4	2
37	26	70.0	100.0	4	2
53.125	26	70.0	100.0	4	2
19.125	38.375	70.0	100.0	4	2
26.5	38.375	70.0	100.0	4	2
37	38.375	70.0	100.0	4	2
53.125	38.375	70.0	88.6	4	2
19.125	50.625	70.0	100.0	5	2
26.5	50.625	70.0	100.0	5	2
37	50.625	70.0	100.0	5	2
53.125	50.625	70.0	72.3	5	2
19.125	58	70.0	100.0	5	2
26.5	58	70.0	100.0	5	2
37	58	70.0	100.0	5	2
53.125	58	66.1	66.1	5	2
19.125	63	70.0	100.0	5	2
26.5	63	70.0	100.0	5	2
37	63	70.0	100.0	5	2
53.125	63	62.9	62.9	5	2
19.125	74.25	70.0	100.0	6	2
26.5	74.25	70.0	100.0	6	2
37	74.25	70.0	86.0	6	2
53.125	74.25	57.7	57.7	6	2

7500 Non Impact Single Hung View Window
Test # FTL 4363 - 3/16" Annealed View

Flange Frame w/ Heavy Duty Rail

TABLE V-1

CODE SIZE	Width (in)	Height (in)	P(+) psf	P(-) psf	Each Jamb Anchors	Head Anchors
14 - 2	19.125	50.625	70.00	131.00	4	2
14 - 3	19.125	50.625	70.00	131.00	4	2
15 - 3	19.125	63	70.00	130.00	6	2
15 - 4	19.125	63	70.00	131.00	6	2
16 - 4	19.125	74.25	70.00	123.00	7	2
16 - 45	19.125	74.25	70.00	128.00	7	2
16 - 5	19.125	74.25	70.00	131.00	7	2
H34 - 2	26.5	50.625	70.00	77.30	4	2
H34 - 3	26.5	50.625	70.00	77.30	4	2
H35 - 3	26.5	63	70.00	72.40	6	2
H35 - 4	26.5	63	70.00	77.30	6	2
H36 - 4	26.5	74.25	64.40	64.40	7	2
H36 - 45	26.5	74.25	64.40	64.40	7	2
H36 - 5	26.5	74.25	64.40	64.40	7	2
24 - 2	37	50.625	56.60	56.60	4	2
24 - 3	37	50.625	56.60	56.60	4	2
25 - 3	37	63	55.20	55.20	6	2
25 - 4	37	63	56.60	56.60	6	2
26 - 4	37	74.25	49.10	49.10	7	2
26 - 45	37	74.25	53.30	53.30	7	2
26 - 5	37	74.25	56.60	56.60	7	2
34 - 2	53.125	50.625	42.20	42.20	5	2
34 - 3	53.125	50.625	42.20	42.20	5	2
35 - 3	53.125	63	41.50	41.50	6	2
35 - 4	53.125	63	42.20	42.20	6	2
36 - 4	53.125	74.25	39.00	39.00	7	2
36 - 45	53.125	74.25	38.00	38.00	7	2
36 - 5	53.125	74.25	38.00	38.00	7	2

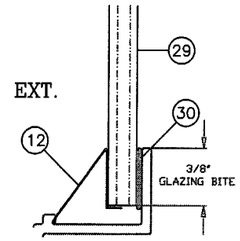

MONOLITHIC GLASS – SINGLE GLAZE
ANNEALED OR TEMPERED
1/8", 3/16" OR 1/4" THICK

(SEE DESIGN PRESSURE TABLES)

GLAZING DETAIL & DESCRIPTION

7500 Non Impact Single Hung Window
Test # FTL 4505 - 3/16" Annealed

Pressure limited to Negative 100psf.

Flange Frame w/ Standard Meeting Rail.

Width (in)	Height (in)	P(+) psf	P(-) psf	Each Jamb Anchors	Head Anchors
19.125	26	70.0	100.0	4	2
26.5	26	70.0	100.0	4	2
37	26	70.0	100.0	4	2
53.125	26	70.0	100.0	4	2
19.125	38.375	70.0	100.0	4	2
26.5	38.375	70.0	100.0	4	2
37	38.375	70.0	100.0	4	2
53.125	38.375	70.0	76.8	4	2
19.125	50.625	70.0	100.0	5	2
26.5	50.625	70.0	100.0	5	2
37	50.625	70.0	93.3	5	2
53.125	50.625	62.6	62.6	5	2
19.125	58	70.0	100.0	5	2
26.5	58	70.0	100.0	5	2
37	58	70.0	82.0	5	2
53.125	58	52.7	52.7	5	2
19.125	63	70.0	100.0	5	2
26.5	63	70.0	100.0	5	2
37	63	70.0	77.2	5	2
53.125	63	49.9	49.9	5	2
19.125	74.25	70.0	100.0	6	2
26.5	74.25	70.0	89.8	6	2
37	74.25	66.8	66.8	6	2
53.125	74.25	45.8	45.8	6	2

7500 Non Impact Single Hung Window
Test # FTL 4323 - 3/16" Tempered

Pressure Limited to Negative 100psf.

Flange Frame w/ Heavy Duty Frame

Width (in)	Height (in)	P(+) psf	P(-) psf	Each Jamb Anchors	Head Anchors
19.125	26	70.0	100.0	4	2
26.5	26	70.0	100.0	4	2
37	26	70.0	100.0	4	2
53.125	26	70.0	100.0	4	2
19.125	38.375	70.0	100.0	4	2
26.5	38.375	70.0	100.0	4	2
37	38.375	70.0	100.0	4	2
53.125	38.375	70.0	100.0	4	2
19.125	50.625	70.0	100.0	5	2
26.5	50.625	70.0	100.0	5	2
37	50.625	70.0	100.0	5	2
53.125	50.625	70.0	100.0	5	2
19.125	58	70.0	100.0	5	2
26.5	58	70.0	100.0	5	2
37	58	70.0	100.0	5	2
53.125	58	70.0	91.6	5	2
19.125	63	70.0	100.0	5	2
26.5	63	70.0	100.0	5	2
37	63	70.0	100.0	5	2
53.125	63	70.0	87.2	7	3
19.125	74.25	70.0	100.0	6	2
26.5	74.25	70.0	100.0	6	2
37	74.25	70.0	100.0	6	2
53.125	74.25	70.0	80.0	7	3

7500 Non Impact Single Hung View Window
Test # FTL 4345 - 3/16" Tempered View

Pressure Limited to Negative100psf.

Flange Frame w/ Heavy Duty Rail - TABLE V-2

CODE SIZE	Width (in)	Height (in)	P(+) psf	P(-) psf	Each Jamb Anchors	Head Anchors
14 - 2	19.125	50.625	70.0	100.0	4	2
14 - 3	19.125	50.625	70.0	100.0	4	2
15 - 3	19.125	63	70.0	100.0	6	2
15 - 4	19.125	63	70.0	100.0	6	2
16 - 4	19.125	74.25	70.0	100.0	7	2
16 - 45	19.125	74.25	70.0	100.0	7	2
16 - 5	19.125	74.25	70.0	100.0	7	2
H34 - 2	26.5	50.625	70.0	100.0	4	2
H34 - 3	26.5	50.625	70.0	100.0	4	2
H35 - 3	26.5	63	70.0	100.0	6	2
H35 - 4	26.5	63	70.0	100.0	6	2
H36 - 4	26.5	74.25	70.0	100.0	7	2
H36 - 45	26.5	74.25	70.0	100.0	7	2
H36 - 5	26.5	74.25	70.0	100.0	7	2
24 - 2	37	50.625	70.0	100.0	4	2
24 - 3	37	50.625	70.0	100.0	4	2
25 - 3	37	63	70.0	100.0	6	2
25 - 4	37	63	70.0	100.0	6	2
26 - 4	37	74.25	70.0	100.0	7	2
26 - 45	37	74.25	70.0	100.0	7	2
26 - 5	37	74.25	70.0	100.0	7	2
34 - 2	53.125	50.625	70.0	100.0	5	2
34 - 3	53.125	50.625	70.0	100.0	5	2
35 - 3	53.125	63	70.0	93.0	7	3
35 - 4	53.125	63	70.0	87.6	6	2
36 - 4	53.125	74.25	70.0	84.1	7	2
36 - 45	53.125	74.25	70.0	81.3	7	2
36 - 5	53.125	74.25	70.0	80.0	7	3

Approved as complying with the Florida Buiding Code
Date SEP 01 2005
NOA# 05-0324.07
Miami Dade Product Control Division
By Shaq L. Chanda

LAWSON INDUSTRIES, INC.
8501 N.W. 90 ST.
MEDLEY, FLORIDA 33166
PH No. (305) 696-8660

MANUFACTURER OF QUALITY ALUMINUM WINDOWS AND GLASS DOORS

SH-7500 SINGLE HUNG FLANGE WINDOW

GLASS LOAD CHARTS & MONOLITHIC GLAZING DETAIL

Revision Notes:

Drawn By: N. ERAZO
Date Drawn: 09/20/04
Revised By:
Date Revised:
Revision Level:
Scale:

Product Reference Number:
Drawing Number: L7500-0401
Sheet: 3 OF 5
Revision #:

THOMAS J. SOTOS
PROFESSIONAL ENGINEER
FL LIC. # 55225

DATE

7500 Non Impact Single Hung Window
Test # FTL 4343 - 3/16" Annealed
Pressure Limited to Negative 100psf.
Flange Frame w/ Heavy Duty Rail

Width (in)	Height (in)	P(+) psf	P(-) psf	Each Jamb Anchors	Head Anchors
19.125	26	70.0	100.0	4	2
26.5	26	70.0	100.0	4	2
37	26	70.0	100.0	4	2
53.125	26	70.0	100.0	4	2
19.125	38.375	70.0	100.0	4	2
26.5	38.375	70.0	100.0	4	2
37	38.375	70.0	100.0	4	2
53.125	38.375	70.0	92.2	4	2
19.125	50.625	70.0	100.0	5	2
26.5	50.625	70.0	100.0	5	2
37	50.625	70.0	93.3	5	2
53.125	50.625	64.5	64.5	5	2
19.125	58	70.0	100.0	5	2
26.5	58	70.0	100.0	5	2
37	58	70.0	82.0	5	2
53.125	58	52.7	52.7	5	2
19.125	63	70.0	100.0	5	2
26.5	63	70.0	100.0	5	2
37	63	70.0	77.2	5	2
53.125	63	49.9	49.9	5	2
19.125	74.25	70.0	100.0	6	2
26.5	74.25	70.0	89.8	6	2
37	74.25	66.8	66.8	6	2
53.125	74.25	45.8	45.8	6	2

7500 Non Impact Single Hung Window
Test # FTL 4350 - 1/2" Overall Insulated w/ 1/8" Annealed
Flange Frame w/ Heavy Duty Rail

Width (in)	Height (in)	P(+) psf	P(-) psf	Each Jamb Anchors	Head Anchors
19.125	26	70.0	210.0	4	2
26.5	26	70.0	210.0	4	2
37	26	70.0	169.9	4	2
53.125	26	70.0	111.1	4	2
19.125	38.375	70.0	210.0	4	2
26.5	38.375	70.0	171.0	4	2
37	38.375	70.0	112.0	4	2
53.125	38.375	70.0	80.7	4	2
19.125	50.625	70.0	181.0	5	2
26.5	50.625	70.0	140.0	5	2
37	50.625	70.0	94.5	5	2
53.125	50.625	56.5	56.5	5	2
19.125	58	70.0	153.0	5	2
26.5	58	70.0	121.0	5	2
37	58	70.0	89.8	5	2
53.125	58	55.9	55.9	5	2
19.125	63	70.0	141.0	5	2
26.5	63	70.0	110.0	5	2
37	63	70.0	85.3	5	2
53.125	63	55.5	55.5	5	2
19.125	74.25	70.0	120.0	6	2
26.5	74.25	70.0	90.8	6	2
37	74.25	70.0	74.5	6	2
53.125	74.25	52.5	52.5	6	2

7500 Non Impact Single Hung Window
Test # FTL 4351 - 1/2" Overall Insulated w/ 1/8" Tempered
Pressure limited to Negative 100psf.
Flange Frame w/ Heavy Duty Rail

Width (in)	Height (in)	P(+) psf	P(-) psf	Each Jamb Anchors	Head Anchors
19.125	26	70.0	100.0	4	2
26.5	26	70.0	100.0	4	2
37	26	70.0	100.0	4	2
53.125	26	70.0	100.0	4	2
19.125	38.375	70.0	100.0	4	2
26.5	38.375	70.0	100.0	4	2
37	38.375	70.0	100.0	4	2
53.125	38.375	70.0	100.0	4	2
19.125	50.625	70.0	100.0	5	2
26.5	50.625	70.0	100.0	5	2
37	50.625	70.0	100.0	5	2
53.125	50.625	70.0	100.0	5	2
19.125	58	70.0	100.0	5	2
26.5	58	70.0	100.0	5	2
37	58	70.0	100.0	5	2
53.125	58	70.0	91.6	5	2
19.125	63	70.0	100.0	5	2
26.5	63	70.0	100.0	5	2
37	63	70.0	100.0	5	2
53.125	63	70.0	87.2	7	2
19.125	74.25	70.0	100.0	6	2
26.5	74.25	70.0	100.0	6	2
37	74.25	70.0	100.0	6	2
53.125	74.25	70.0	80.0	7	3

Notes

1. BOTH EXTRUDED ALUMINUM AND PLASTIC LIFT HANDLE LOCKS ARE QUALIFIED FOR USE ON ALL WINDOWS.
2. THE CAM LOCK IS QUALIFIED FOR USE ON THE 3/16" ANNEALED VIEW AND DSB ANNEALED EQUAL LITE WINDOWS ONLY.

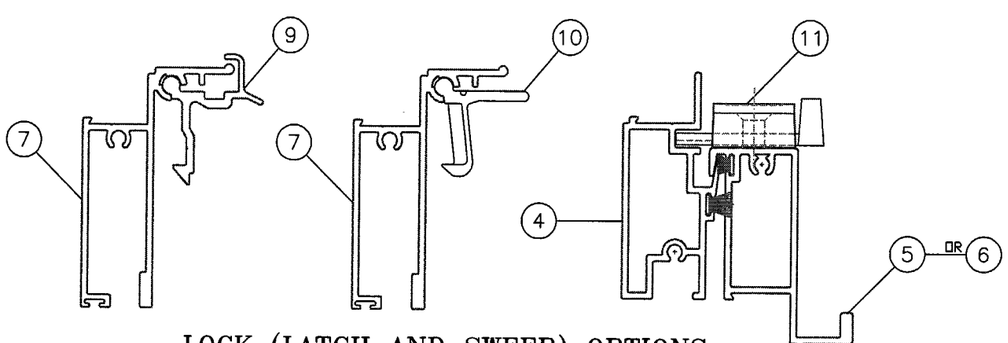

LOCK (LATCH AND SWEEP) OPTIONS

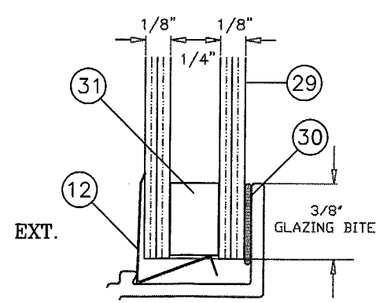

1/2" OVERALL INSULATED GLASS

CONSIST OF:
1/8" ANNEALED OR TEMPERED LITE
+ 1/4" AIR SPACE
+ 1/8" ANNEALED OR TEMPERED LITE
(SEE CORRESPONDING DESIGN PRESSURE CHARTS)

GLAZING DETAIL & DESCRIPTION

Approved as complying with the Florida Buiding Code
Date SEP 01, 2005
NOA# 05-0324.07
Miami Dade Product Control Division
By Ishaq I. Chanda

LAWSON INDUSTRIES, INC.
8501 N.W. 90 ST.
MEDLEY, FLORIDA 33166
PH No. (305) 696-8660

MANUFACTURER OF QUALITY ALUMINUM WINDOWS AND GLASS DOORS

SH-7500 SINGLE HUNG FLANGE WINDOW

GLASS LOAD CHARTS, INSULATED GLAZING DETAIL & LOCK OPTIONS

Revision Notes:

Drawn By: N. ERAZO
Date Drawn: 09/20/04
Revised By:
Date Revised:
Revision Level:
Scale:
Product Reference Number:
Drawing Number: L7500-0401
Sheet: 4 OF 5
Revision #:

THOMAS J. SOTOS
PROFESSIONAL ENGINEER
FL LIC. # 55225

DATE

FRAME HEAD
L-7501

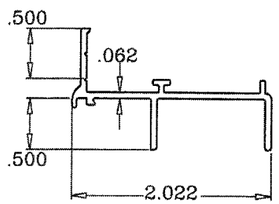

VENT TOP RAIL (Heavy Duty)
L-7506

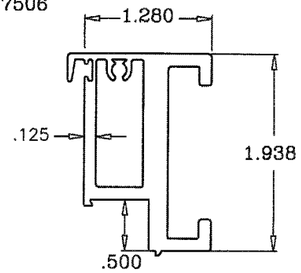

SASH STOP

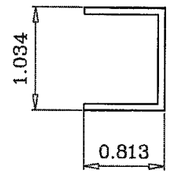

GLAZING BEAD
L-7516

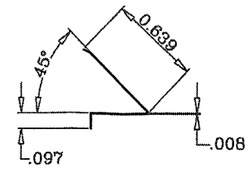

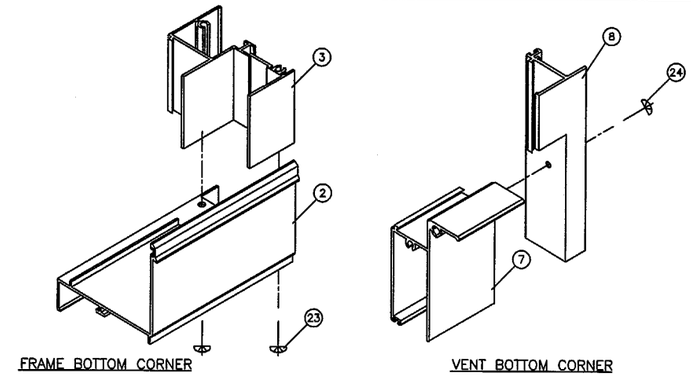

FRAME & SASH CORNER DETAILS

FIXED MEETING RAIL
L-7504

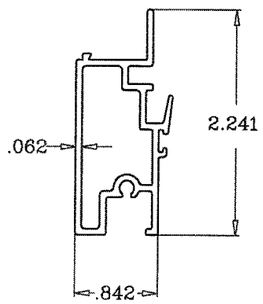

VENT TOP RAIL (Standard Duty)
L-7505

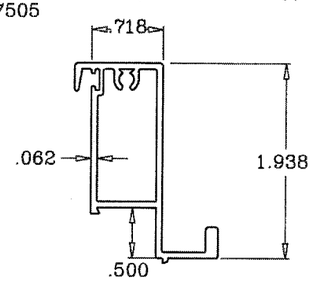

VENT BOTTOM RAIL
L-7507

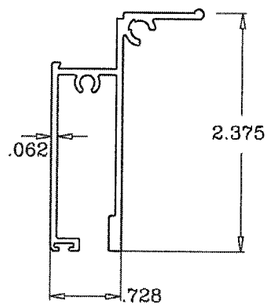

FRAME JAMB
L-7503

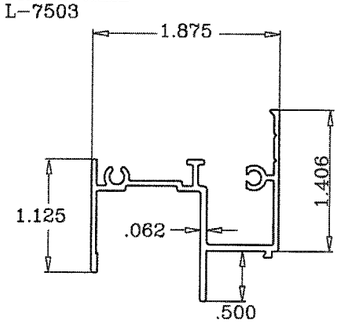

FRAME SILL
L-7502

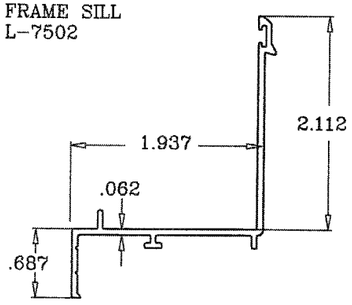

VENT JAMB
L-7508

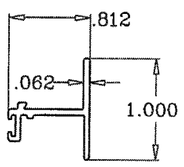

SH7500 FLANGE WINDOW BILL OF MATERIALS

ITEM #	PART #	DRWG. #	REQD.	DESCRIPTION	REMARKS
1	L-7501	LII-121	1	FRAME HEAD	6063-T6 ALUMINUM
2	L-7502	LII-120	1	FRAME SILL	6063-T6 ALUMINUM
3	L-7503	LII-127	2	FRAME JAMB	6063-T6 ALUMINUM
4	L-7504	LII-129	1	FIXED MEETING RAIL	6005-T5 ALUMINUM
5	L-7505	LII-125	1	VENT TOP RAIL STD. DUTY	6005-T5 ALUMINUM
6	L-7506	LII-126	1	VENT TOP RAIL HVY DUTY	6005-T5 ALUMINUM
7	L-7507	LII-136	1	VENT BOTTOM RAIL	6005-T5 ALUMINUM
8	L-7508	LII-124	1	VENT JAMB	6063-T5 ALUMINUM
9	*	*	2	VENT LATCH / LIFT LOCK	6063-T6 ALUMINUM
10	*	*	2	VENT LATCH / LIFT LOCK	INJECTED MOLDED
11	*	*	2	VENT LATCH / SWEEP	DIE CAST
12	L-7516	*	AS REQD.	GLAZING BEAD	ROLL FORMED ALUMINUM
13	*	*	2	VENT/SASH STOP	1 PER REQ'D JAMB
14	*	SCHLEGEL	AS REQD.	TOP RAIL WEATHERSTRIP	.187" X 150" PILE
15	*	ULTRAFAB	AS REQD.	FXD. RAIL WEATHERSTRIP	.187" X 250" FIN SEAL
16	*	ULTRAFAB	AS REQD.	VENT JAMB WEATHERSTRIP	.187" X .280" FIN SEAL
17	*	ULTRAFAB	AS REQD.	FRAME SILL WEATHERSTRIP	.187" X .250" FIN SEAL
18	*	*	AS REQ'D.	BOTT. RAIL WEATHERSTRIP	3/8" DIA. BULB
19	*	*	2	VENT/SILL OPEN CELL PAD	1"x1"x1/2" FOAM PAD
20	*	*	2	SILL/JAMB JOINT GASKET	1/16" CLOSED CELL FOAM
21	L-7523	*	2	VENT TOP GUIDE / CAM	1 AT EACH END OF RAIL
22	L-7524	*	4	VENT JAMB FACE GUIDE	2 PER VENT JAMB
23	*	*	8	FRAME ASSEMBLY SCREWS	# 8 X 3/4" P.H. PHIL.
24	*	*	4	VENT ASSEMBLY SCREWS	# 8 X 1" P.H. PHILLIPS
25	*	*	2	FXD. MTG. RAIL SCREW	# 8 X 1" P.H. PHILLIPS
26	*	*	16 max.	2X FRAME INSTALL'N SCREW	#14 SMS F.H./PHI.
26	*	*	16 max.	CONC. INSTALL'N SCREW	5/16" TAPCON F.H./PHI.
27	L-7527	*	2	BLOCK & TACKLE BALANCE	1 PER JAMB
28	*	*	1	INSECT SCREEN	*
29	*	*	2	GLASS @ TOP & BOTTOM	See Detail @ sheet 2 of 5
30	*	*	AS REQ'D	GLAZING SILICONE	See Detail @ sheet 2 of 5
31	*	774-25B-767	AS REQ'D	"TruSeal" Swiggle Seal	Black -1/4" air space

Approved as complying with the Florida Building Code
Date SEP 01, 2005
NOA# 05-0324.07
Miami Dade Product Control Division
By Ishaq I. Chanda

LAMSON INDUSTRIES, INC.
8501 N.W. 90 ST.
MEDLEY, FLORIDA 33166
PH No. (305) 696-8660

MANUFACTURER OF QUALITY ALUMINUM WINDOWS AND GLASS DOORS

SH-7500 SINGLE HUNG FLANGE WINDOW

BILL OF MATERIALS, EXTRUSION DETAILS & CORNER ASSEMBLY DETAILS

Revision Notes:

Drawn By: N. ERAZO
Date Drawn: 09/20/04
Revised By:
Date Revised:
Revision Level:
Scale:
Drawing Number: L7500-0401
Sheet: 5 OF 5
Revision #:
Product Reference Number:

THOMAS A. SOTOS
PROFESSIONAL ENGINEER
FL LIC. # 55225

DATE

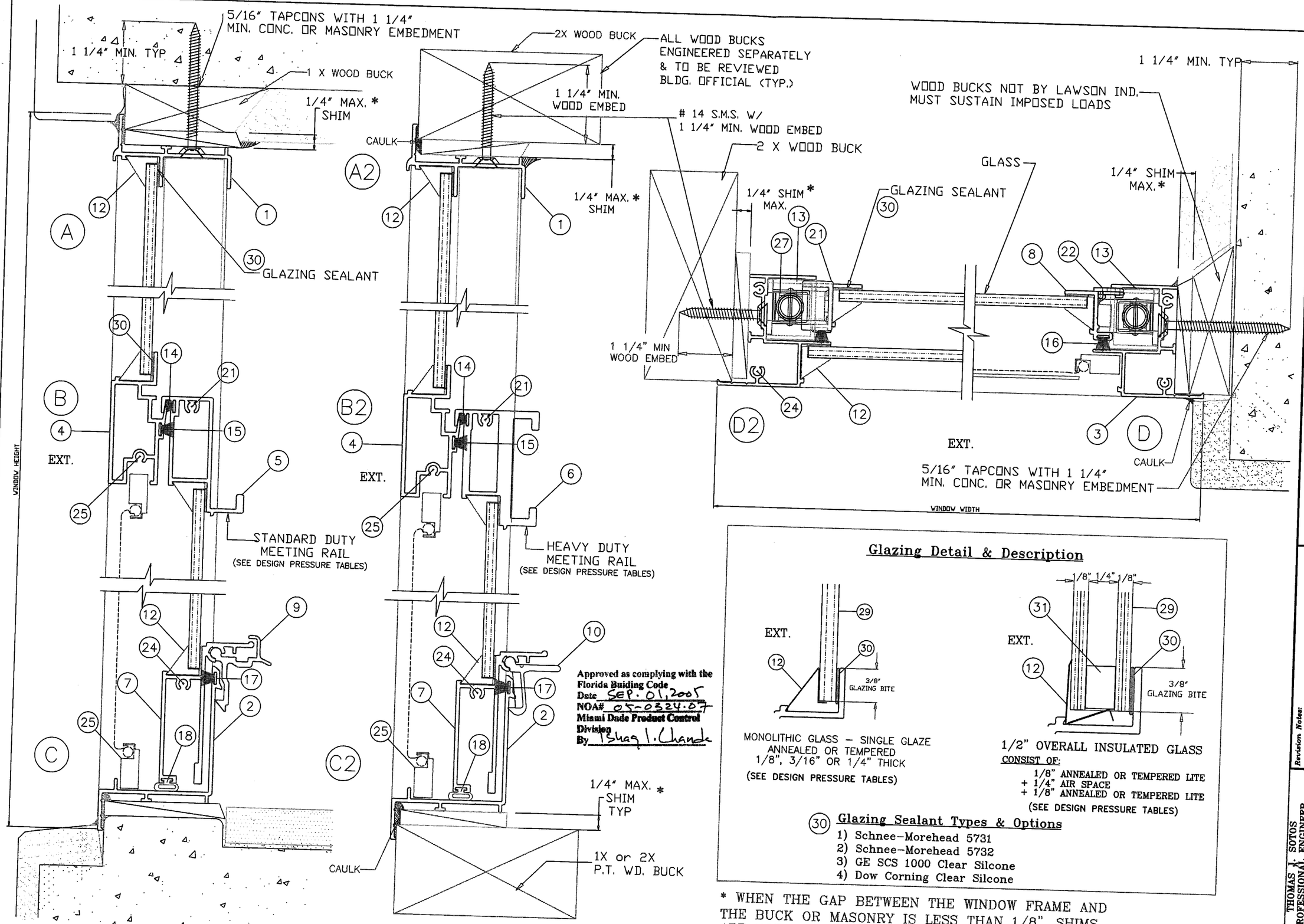

Approved as complying with the Florida Buiding Code
Date SEP. 01, 2005
NOA# 05-0324.07
Miami Dade Product Control Division
By Bhag I. Chanda

Glazing Detail & Description

MONOLITHIC GLASS – SINGLE GLAZE
ANNEALED OR TEMPERED
1/8", 3/16" OR 1/4" THICK
(SEE DESIGN PRESSURE TABLES)

1/2" OVERALL INSULATED GLASS
CONSIST OF:
1/8" ANNEALED OR TEMPERED LITE
+ 1/4" AIR SPACE
+ 1/8" ANNEALED OR TEMPERED LITE
(SEE DESIGN PRESSURE TABLES)

(30) Glazing Sealant Types & Options

1) Schnee-Morehead 5731
2) Schnee-Morehead 5732
3) GE SCS 1000 Clear Silcone
4) Dow Corning Clear Silcone

* WHEN THE GAP BETWEEN THE WINDOW FRAME AND THE BUCK OR MASONRY IS LESS THAN 1/8", SHIMS ARE NOT REQUIRED.

LAWSON INDUSTRIES, INC.
8501 N.W. 90 ST.
MEDLEY, FLORIDA 33166
PH No. (305) 696-8660

MANUFACTURER OF QUALITY ALUMINUM WINDOWS AND GLASS DOORS

SH-7500 SINGLE HUNG FLANGE WINDOW

CROSS SECTIONAL DETAILS FOR STD/HVY DUTY MEETING RAIL

Product Reference Number:	Drawing Number: L7500-0401
Sheet: 2 OF 5	Revision #:
Date Drawn: 09/20/04	Drawn By: N. ERAZO
Date Revised:	Revised By:
Scale:	Revision Level:
Revision Notes:	

THOMAS J. SOTOS
PROFESSIONAL ENGINEER
FL LIC. # 55225

DATE