MIAMI-DADE

BUILDING CODE COMPLIANCE OFFICE (BCCO)
PRODUCT CONTROL DIVISION

MIAMI-DADE COUNTY, FLORIDA
METRO-DADE FLAGLER BUILDING
140 WEST FLAGLER STREET, SUITE 1603
MIAMI, FLORIDA 33130-1563
(305) 375-2901 FAX (305) 375-2908

NOTICE OF ACCEPTANCE (NOA)

American Warming & Ventilating.
7301 International Drive.
Holland, Ohio 43258

SCOPE: This NOA is being issued under the applicable rules and regulations governing the use of construction materials. The documentation submitted has been reviewed by Miami-Dade County Product Control Division and accepted by the Board of Rules and Appeals (BORA) to be used in Miami Dade County and other areas where allowed by the Authority Having Jurisdiction (AHJ).

This NOA shall not be valid after the expiration date stated below. The Miami Dade County Product Control Division (in Miami-Dade County) and/or the AHJ (in areas other than Miami Dade County) reserve the right to have this product or material tested for quality assurance purposes. If this product or material fails to perform in the accepted manner, the manufacturer will incur the expense of such testing and the AHJ may immediately revoke, modify, or suspend the use of such product or material within their jurisdiction. BORA reserves the right to revoke this acceptance, if it is determined by Miami-Dade county Product Control Division that this product or material fails to meet the requirements of the applicable building code.

This product is approved as described herein, and has been designed to comply with the Florida Building Code including the High Velocity Hurricane Zone.

DESCRIPTION: 6"Louver System Model LE-32.

APPROVAL DOCUMENT: Drawing No.**1217**, titled "LE-32 Louver System" dated 04/03/03 with last revision on 08/22/05, prepared by W.W. Schaefer Engineering & consulting, PA., signed and sealed by W. W. Schaefer, P.E., bearing the Miami-Dade County Product Control Revision stamp with the NOA number and expiration date by the Miami-Dade County Product Control Division.

MISSILE IMPACT RATING: Large and Small Missile Impact Resistant.

LABELING: Each unit shall bear a permanent label with the manufacturer's name or logo, city, state and following statement: "Miami-Dade County Product Control Approved or MDCPCA", unless otherwise noted herein.

RENEWAL of this NOA shall be considered after a renewal application has been filed and there has been no change in the applicable building code negatively affecting the performance of this product.

TERMINATION of this NOA will occur after the expiration date or if there has been a revision or change in the materials, use, and/or manufacture of the product or process. Misuse of this NOA as an endorsement of any product, for sales, advertising or any other purposes shall automatically terminate this NOA. Failure to comply with any section of this NOA shall be cause for termination and removal of NOA.

ADVERTISEMENT: The NOA number preceded by the words Miami-Dade County, Florida, and followed by the expiration date may be displayed in advertising literature. If any portion of the NOA is displayed, then it shall be done in its entirety.

INSPECTION: A copy of this entire NOA shall be provided to the user by the manufacturer or its distributors and shall be available for inspection at the job site at the request of the Building Official.

This NOA revises NOA # 03-1001.01 consists of this page, evidence page as well as approval document mentioned above.

The submitted documentation was reviewed by **Candido E. Font PE.**

12/08/05

PRODUCT CONTROL ACCEPTED

NOA No: 05-0328.01
Expiration Date: April 22, 2009
Approval Date: December 8, 2005

American Warming & Ventilating.

NOTICE OF ACCEPTANCE: EVIDENCE SUBMITTED

A. DRAWINGS.

1. Drawing prepared by W.W. Schaefer Engineering & consulting P.A., titled "LE-32 Louver System" Drawing No. 1217, dated 04/03/03, revised on 08/22/05, signed and sealed by W. W. Schaefer, PE.

B. TESTS.

	Test Report	Test Standard	Test Date	Test Witness
1.	HTL 0198-0508-03	TAS 201,202 & 203	05/15-10/03	V.J.Abraham PE.
2.	HTL.0198-0618-03	TAS 201, 202 & 203	06/06-25/03	V.J.Abraham PE.
3.	HTL 0198-0804-03	TAS 201, 202 & 203	08/06-08/03	V.J.Abraham PE
4.	HTL 0198-0508-03	TAS 201, 202 & 203	05/08-13/03	V.J.Abraham PE
5.	HTL 0198-0804-03	TAS 201, 202 & 203	08/08-11/03	V.J.Abraham PE
6.	HTL 0198-0324-03	TAS 201, 202 & 203	03/24-26/03	V.J.Abraham PE
7.	HTL 0198-0324-03	TAS 201, 202 & 203	03/24-04/16	V.J.Abraham PE
8.	HTL 0198-0324-03	TAS 201, 202 & 203	03/24-24/03	V.J.Abraham PE
9.	HTL 0198-0324-03	TAS 201, 202 & 203	03/25-04/21	V.J.Abraham PE
10.	HTL 0198-0128-03	TAS 201, 202 & 203	02/10-04/21	V.J.Abraham PE
11.	HTL 0198-0508-03	TAS 202	05/13-13/03	V.J.Abraham PE
12.	HTL 0198-0324-03	TAS 202	03/27-27/03	V.J.Abraham PE
13.	HTL 0198-0324-03	TAS 201 & 203	03/24-04/21	V.J.Abraham PE.
14.	AT 01-45720.01	TAS100(A)-95	06/16/03	J.A. Reed PE.

C. CALCULATIONS.

1. Allowable Load Calculations, dated 09/04/03 pages 1 through 11 of 11 prepared by W.W. Schaefer Engineering and Consulting PA, signed and sealed by W.W. Schaefer, PE.
2. Allowable Load Calculations, dated 03/04/04, pages 1 through 6 prepared by W.W. Schaefer Engineering & Consulting PA, signed and sealed by W.W. Schaefer PE.
3. Revised Allowable Load Calculations dated 09/04/03 and revised on 08/22/05,page 1 through 11 prepared by W.W. Schaefer Engineering & Consulting PA, signed and sealed by W.W. Schaefer PE.

D. QUALITY ASSURANCE.

1. Miami-Dade Product Control Division

E. STATEMENTS

1. No financial interest letter issued by W.W. Schaefer Engineering & Consulting PA on 09/22/03 signed and sealed by W. W. Schaefer, PE.
2. Code compliance letter issued by W.W. Schaefer Engineering & Consulting PA on 09/22/03 signed and sealed by W. W. Scheafer PE.
3. Test compliance letter issued by Hurricane Test Laboratory on 09/09/03, signed and sealed by V.J. Abraham, PE.

12/08/05

Candido F. Font PE.
Sr. Product Control Examiner
NOA No 05-0328.01
Expiration Date: April 22, 2009
Approval: Date: December 8, 2005

FASTENER SCHEDULE

ANCHOR TYPE	(5) SUBSTRATE	MINIMUM EMBEDMENT	MINIMUM EDGE DIST.
(3) NO. 10 S.S. SCREW	WOOD	1 3/8"	3/4"
(6) NO. 10 SELF TAP SCREW	METAL STUD OR STEEL	FULL	3/4"
(1) 1/4" CONCRETE SCREW	C90 CONCR. BLOCK	1 1/4"	2 1/2"
(1) 1/4" CONCRETE SCREW	CONCRETE	1 1/4"	2"
(2) 1/4" BOLT	STEEL OR METAL STUD	FULL	3/4"
(4) 3/8" SLEEVE ANCHOR	CONCRETE	2 1/2"	2"
(2) 3/8" BOLT	STEEL	FULL	3/4"

(1) CONCRETE SCREWS SHALL BE ELCO TAPCONS OR HILTI KWIK-CON II. (HARDENED STEEL OR S.S. PER AISI 1021 & 410)
(2) BOLT SHALL BE MIN. A307 GALVANIZED OR 304 S.S. (Fv = 10,000 PSI MIN.)
(3) WOOD SCREWS SHALL HAVE MIN. YIELD STRENGTH OF Fyb = 80,000 PSI
(4) SLEEVE ANCHORS MAY BE GALVANIZED OR S.S. RAMSET RED HEAD DYNABOLTS OR POWERS RAWL POWER BOLT.
(5) SEE GENERAL NOTES FOR SUBSTRATE REQUIREMENTS.
(6) SELF TAPPING SCREWS SHALL BE CORROSION RESISTANT MIN. SAE GRADE 2 STEEL OR MIN. ALLOY GROUP 1, 2 & 3 CONDITION "A" STAINLESS STEEL.

CORNER & BLADE END CONSTRUCTION

BLADE TO JAMB:
WELDED CONDITION: BLADE END BUTTS TO JAMB, IS WELDED WITH ONE 1/8" X 5" WELD AND SCREWED TO JAMB WITH WITH 2 NO. 8 X 3/4" S.S. SMS SCREWS THROUGH JAMB AND INTO BLADE SCREW SPLINES.
SCREWED CONDITION: BLADE END BUTTS TO JAMB & IS SCREWED TO JAMB WITH TWO (2) 1/4-20 X 1 1/2" TYPE "F" SCREWS THROUGH JAMB AND INTO BLADE SCREW SPLINES.
HEAD TO JAMB: HEAD FRAME IS SQUARE CUT, BUTTED AND JOINED TO JAMB WITH ONE 1/8" X 5" WELD AND 2 NO. 8 X 3/4" S.S. SMS SCREWS THROUGH JAMB AND INTO HEADER SCREW SPLINES.
SILL TO JAMB: SIDE JAMB BUTTS TO SILL AND IS JOINED TO SILL WITH THREE(3) 1/8" X 1" WELDS AND 2 NO. 8 X 3/4" S.S. SMS SCREWS THROUGH SILL AND INTO JAMB SCREW SPLINES.

GENERAL NOTES:

1. IT SHALL BE THE RESPONSIBILITY OF THE PERMIT HOLDER TO VERIFY THE STRUCTURAL INTEGRITY OF THE EXISTING STRUCTURE TO SUPPORT THE LOADS SUPERIMPOSED BY THE LOUVERS.
2. THESE LOUVER SYSTEMS HAVE BEEN DESIGNED & TESTED IN ACCORDANCE WITH THE 2004 FLORIDA BUILDING CODE (FBC) AND PROTOCOLS TAS-100, 201, 202 & 203 INCLUDING HIGH VELOCITY HURRICANE ZONES (HVHZ).
3. EACH LOUVER ASSEMBLY SHALL BE PERMANENTLY LABELED AS FOLLOWS: AMERICAN WARMING AND VENTILATING, HOLLAND, OH MIAMI-DADE COUNTY PRODUCT CONTROL APPROVED
4. ALL CONCRETE SUBSTRATE SHALL BE MIN. 3000 PSI.
5. ALL WOOD SUBSTRATE SHALL BE MIN. G = 0.55 DENSITY.
6. ALL METAL STUD SUBSTRATE SHALL BE MIN. 16 GA. Fy = 33 ksi.
7. ALL STRUCTURAL STEEL SUBSTRATE SHALL BE MIN. 12 GA. Fy = 36 ksi.
8. PANEL WIDTHS & HEIGHTS ARE LIMITED AS SHOWN IN ELEVATIONS.
9. MULLED PANELS MAY BE HORIZONTALLY INSTALLED TO AN UNLIMITED NUMBER. VERTICAL STACKING OF MULLED PANELS MAY OCCUR PROVIDING A STRUCTURAL SUPPORT IS DESIGNED & INSTALLED BY OTHERS TO SUPPORT ALL LOADS TRANSFERED FROM THE LOUVER ASSEMBLY (SINGLE PANELS MAY RUN TO UNLIMITED HEIGHT PER ELEVATION IF NO MULLION EXISTS).
10. SEPARATION OF DISSIMILAR MATERIALS MUST BE MAINTAINED PER ALL APPLICABLE CODES & SECTION 2003.8.4 OF FBC 2004.
11. THIS SYSTEM HAS BEEN TESTED FOR WATER INFILTRATION RESISTANCE AND IS A WATER RESISTANT SYSTEM WHEN THE LOUVER BLADE ENDS ARE SCREWED & WELDED AND THE DAMPER BLADE IS ATTACHED TO THE LOUVER BLADES AS SHOWN IN SECTION "A2/4". (NOT RATED FOR WATER RESISTANCE WHEN LOUVER BLADE ENDS ARE SCREW CONNECTED ONLY)
12. UNLESS THE DAMPER BLADE IS ATTACHED TO THE LOUVER BLADES, THE LOUVER IS TO BE INSTALLED IN A LOCATION WHERE THE ROOM BEHIND THE LOUVER IS DESIGNED TO DRAIN WATER PENETRATING INTO THE ROOM, AND THE ROOM WILL HOUSE WATER RESISTANT/WATER PROOF EQUIPMENT, COMPONENTS OR SUPPLIES.
13. ALL DETAILS OF SHEETS 8 THRU 11 MUST COMPLY WITH THE LOUVER DETAILS SHOWN ON SHEETS 1 THRU 7. ANY DISCREPANCY IS CONTROLLED BY THE DETAILS ON SHEETS 1 THRU 7.

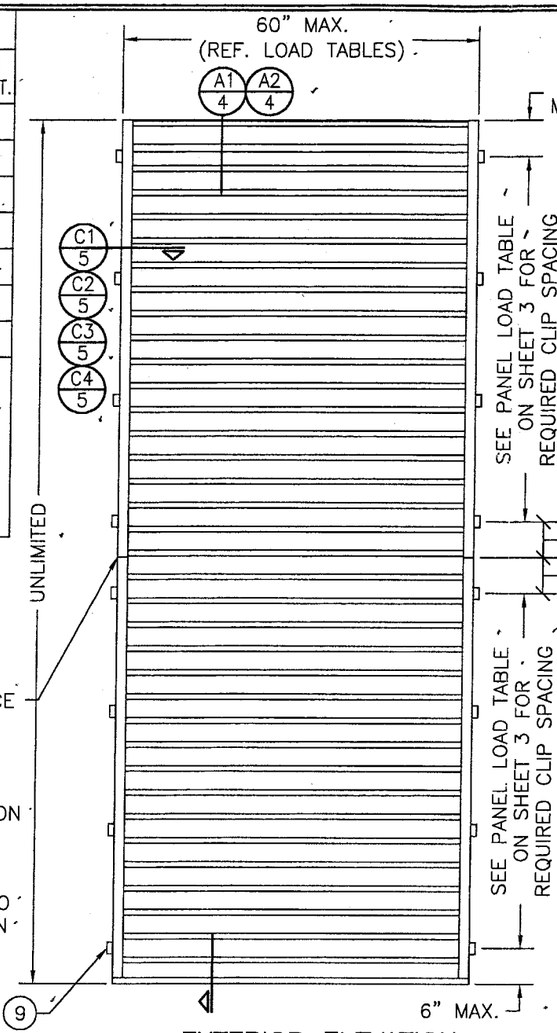

INSTALLATION CLIP (AT SIDES ONLY)

EXTERIOR ELEVATION
SINGLE LOUVER PANEL WITHOUT BLADE SUPPORT ANGLE

NOTE: LOUVER PANELS MAY BE STACKED/SPLICED VERTICALLY OR THE LOUVER PANEL MAY RUN VERTICALLY TO INFINITE HEIGHT PROVIDING OPENING IS PROPERLY DESIGNED BY OTHERS TO SUPPORT THE LOUVER PANELS.

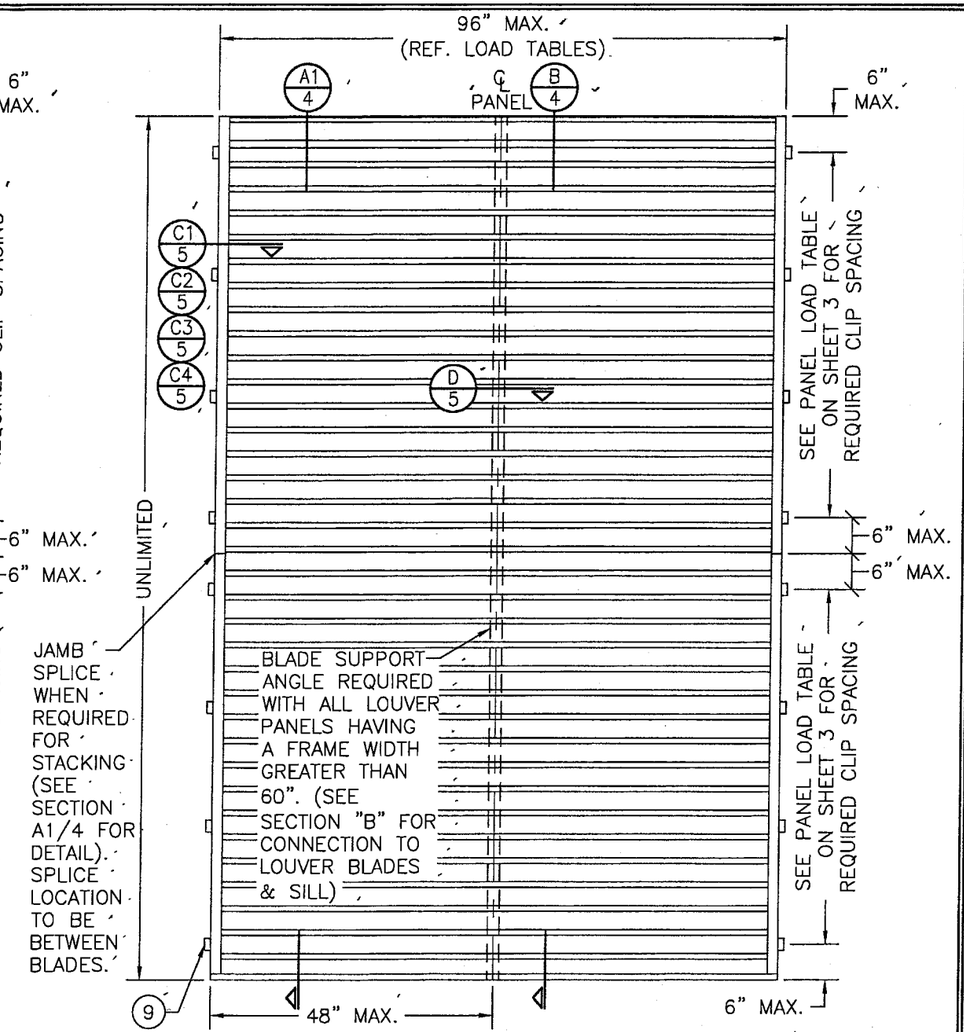

INSTALLATION CLIP (AT SIDES ONLY)

EXTERIOR ELEVATION
SINGLE LOUVER PANEL WITH BLADE SUPPORT ANGLE

NOTE: LOUVER PANELS MAY BE STACKED/SPLICED VERTICALLY OR THE LOUVER PANEL MAY RUN VERTICALLY TO INFINITE HEIGHT PROVIDING OPENING IS PROPERLY DESIGNED BY OTHERS TO SUPPORT THE LOUVER PANELS. BLADE SUPPORT ANGLE IS CONTINUOUS FROM HEAD TO SILL AND SPLICING OF THIS ANGLE IS NOT PART OF THIS APPROVAL.

ALLOWABLE PRESSURES

PRESSURES VARY WITH PANEL SIZE, CLIP SPACING & MULLION CONDITIONS & SHALL BE CONTROLLED BY THE LESSER OF THE ALLOWABLE PRESSURE FOR EACH OF THOSE APPLICABLE CONDITIONS. SEE LOAD TABLES ON SHEET 3 FOR ALLOWABLE PRESSURES.

PRODUCT REVISED
as complying with the Florida Building Code
Acceptance No. 05-0328.01
Expiration Date 04/22/09
By
Miami Dade Product Control Division

NO.	REVISION DESCRIPTION	BY	DATE
A1	ADDED BLADE SCREWED CONSTRUCTION OPTION	S.T.R.	03/23/05
A2	UPDATE TO 2004 CODE COMPLIANT	W.W.S.	08/22/05

DRAWN BY: K.P.S. | CHECKED BY: W.W.S.
PLOT: 1=24 | DATE: 04/03/03

DRAWING TITLE: LE-32 LOUVER SYSTEM

MANUFACTURER
AMERICAN WARMING & VENTILATING
7301 INTERNATIONAL DRIVE
HOLLAND, OHIO 43528
419-865-5000

CONSULTANTS
W. W. SCHAEFER ENGINEERING & CONSULTING, P.A.
8895 N. MILITARY TRAIL; SUITE C-204
PALM BEACH GARDENS, FL 33410
PHONE: 561-775-4902 FAX: 561-775-4903

CERTIFICATION
AUG 22 2005
WARREN W. SCHAEFER, P.E.
P.E. NO. 44135

DRAWING NO. 1217 | REV. A
SHEET NO. 1 OF 12

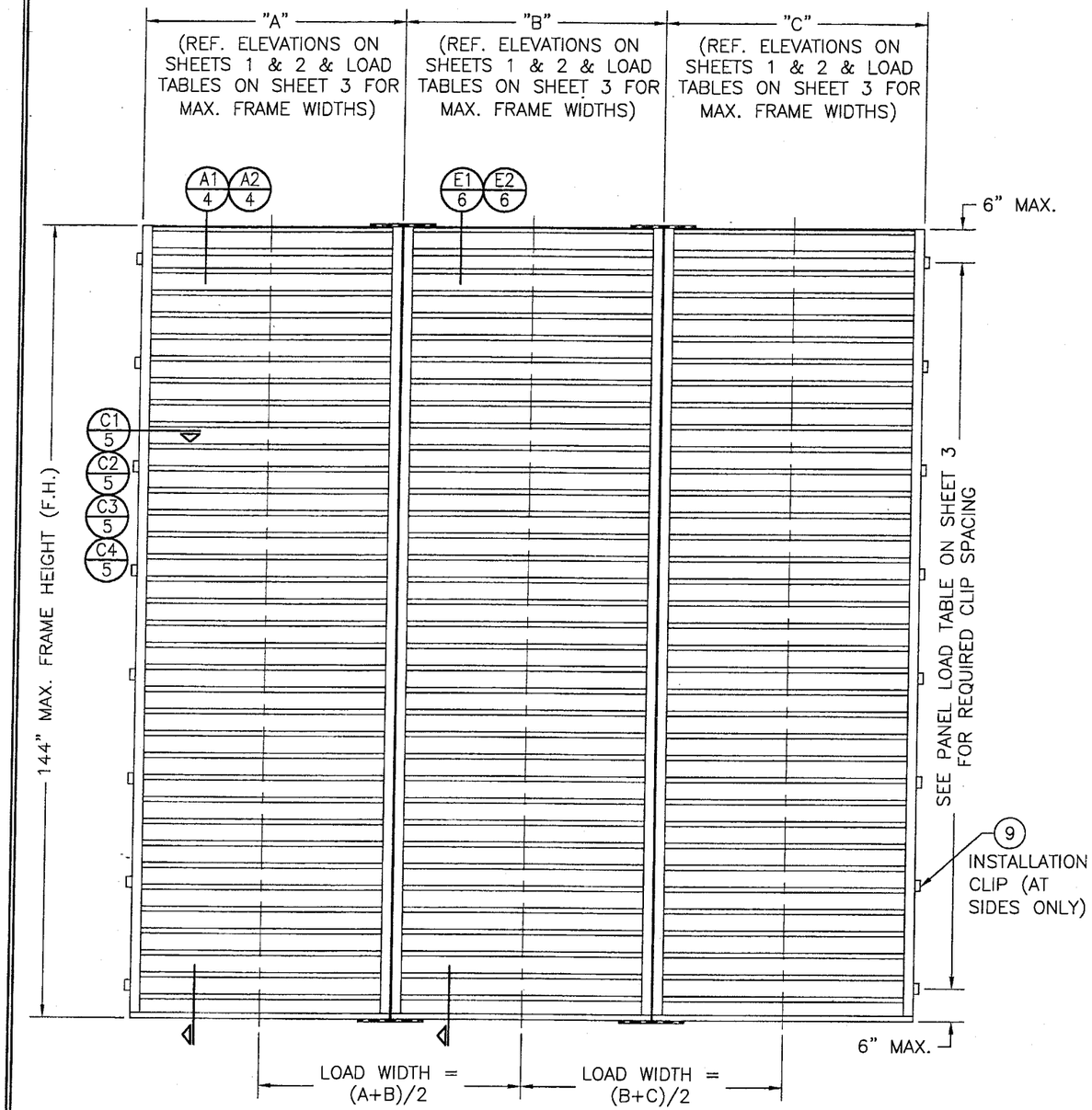

EXTERIOR ELEVATION
MULLED UNITS

(3 PANEL UNIT SHOWN; MORE THAN 3 PANELS MAY BE MULLED/STACKED HORIZONTALLY)

RECTANGULAR PANELS SHOWN; SHAPED PANELS MAY ALSO BE MULLED PROVIDING THE MULLION END CONNECTIONS ARE AS DETAILED WITH THE ABOVE RECTANGULAR ELEVATION.

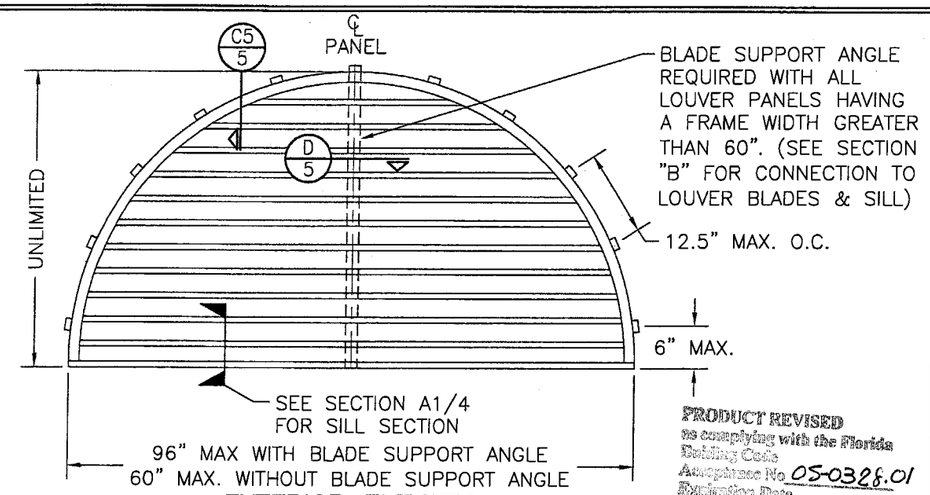

EXTERIOR ELEVATION
HALF ROUND LOUVER PANEL

(OTHER SHAPES APPLICABLE PER APPROVED SHAPE TABLE)

PRODUCT REVISED
in complying with the Florida Building Code
Acceptance No. 05-0328.01
Expiration Date
By
Miami Dade Product Control Division

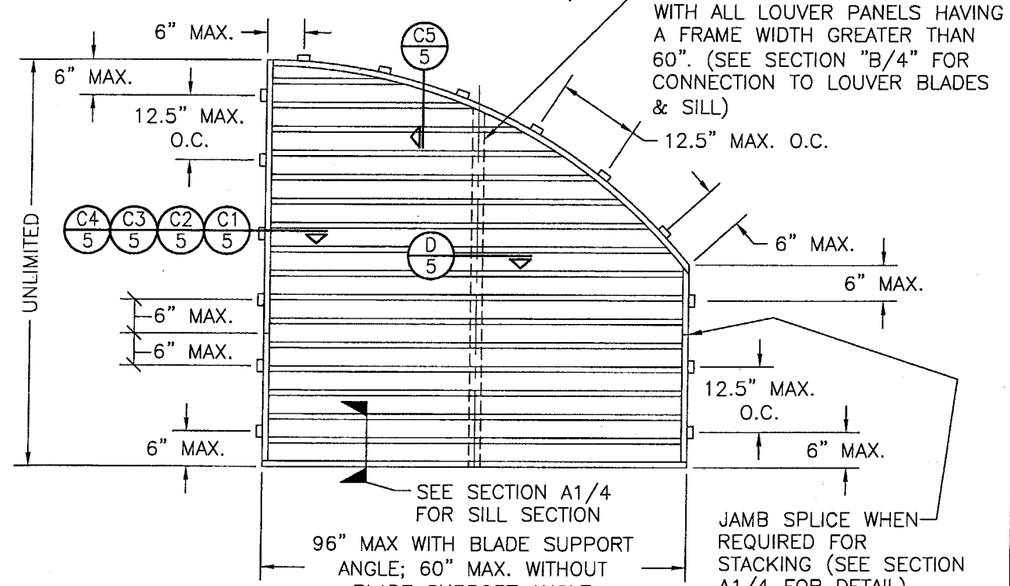

EXTERIOR ELEVATION
PARTIAL ARCH TOP PANEL

(OTHER SHAPES APPLICABLE PER APPROVED SHAPE TABLE)

APPROVED SHAPES

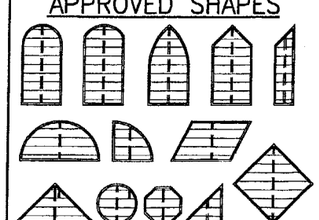

NOTES:

1. OTHER SHAPES MAY APPLY PROVIDING THEY ARE SIMILAR TO THOSE SHOWN & HAVE CORNER CONSTRUCTION AS DESCRIBED ON ALL SHEETS.
2. ALL SHAPED LOUVER PANELS ARE RESTRICTED TO THE SAME PANEL WIDTHS & PRESSURE AS THE RECTANGULAR LOUVER PANELS & MAY BE STACKED VERTICALLY & HORIZONTALLY THE SAME AS THE RECTANGULAR PANELS.
3. CLIP SPACING IS RESTRICTED TO 6" FROM ENDS & 12.5" MAX. O.C. FOR ALL SHAPED LOUVER PANELS.
4. WHEN BLADES EXCEED 60" IN LENGTH (UP TO 96"), BLADE SUPPORT ANGLE AND BRACKETS ARE REQUIRED AT A MAXIMUM OF 48" FROM BLADE ENDS.
5. ALL OTHER SHAPES, EXCEPT SQUARE & RECTANGULAR, MUST HAVE BLADE SUPPORT ANGLE AND BRACKETS AT CENTER OF SPAN REGARDLESS OF BLADE LENGTH.
6. SPLICES MAYNOT EXIST ON BENT OR SLOPED JAMBS. ONLY STRAIGHT VERTICAL JAMBS MAY BE SPLICED.

DRAWN BY: K.P.S.	CHECKED BY: W.W.S.
PLOT: 1=24	DATE: 04/03/03

NO.	REVISION DESCRIPTION	BY	DATE
A3	REDUCED CLIP SPACING	W.W.S.	08/22/05

DRAWING TITLE: LE-32 LOUVER SYSTEM

MANUFACTURER: AMERICAN WARMING & VENTILATING
7301 INTERNATIONAL DRIVE
HOLLAND, OHIO 43528
419-865-5000

CONSULTANTS: W. W. SCHAEFER ENGINEERING & CONSULTING, P.A.
8895 N. MILITARY TRAIL; SUITE C-204
PALM BEACH GARDENS, FL 33410
PHONE: 561-775-4902 FAX: 561-775-4903

CERTIFICATION
AUG 22 2005
WARREN W. SCHAEFER, P.E.
P.E. NO. 44135

DRAWING NO. 1217 REV. A

SHEET NO. 2 OF 12

MULLION LOAD TABLE (SEE INSTRUCTIONS BELOW)

MULLION SPAN (IN.)	LOAD WIDTH (IN.)	(1) ALLOWABLE (2) PRESSURE (PSF)
18"	96"	180.0
24"	96"	164.3
	90"	175.3
	84"	180.0
30"	96"	131.5
	90"	140.2
	84"	150.2
	78"	161.8
	72"	175.3
	66"	180.0
36"	96"	109.6
	90"	116.9
	84"	125.2
	78"	134.8
	72"	146.1
	66"	159.3
	60"	175.3
	54"	180.0
42"	96"	93.9
	90"	100.2
	84"	107.3
	78"	115.6
	72"	125.2
	66"	136.6
	60"	150.2
	54"	166.9
	48"	180.0
48"	96"	82.2
	90"	87.6
	84"	93.9
	78"	101.1
	72"	109.6
	66"	119.5
	60"	131.5
	54"	146.1
	48"	164.3
	42"	180.0

MULLION SPAN (IN.)	LOAD WIDTH (IN.)	(1) ALLOWABLE (2) PRESSURE (PSF)
60"	96"	65.7
	90"	70.1
	84"	75.1
	78"	80.9
	72"	87.6
	66"	95.6
	60"	105.2
	54"	116.9
	48"	131.5
	42"	150.2
	36"	175.3
	30"	180.0
66"	96"	59.8
	90"	63.7
	84"	68.3
	78"	73.5
	72"	79.7
	66"	86.9
	60"	95.6
	54"	106.2
	48"	119.5
	42"	136.6
	36"	159.3
	30"	180.0
72"	96"	54.8
	90"	58.4
	84"	62.6
	78"	67.4
	72"	73.0
	66"	79.7
	60"	87.6
	54"	97.4
	48"	109.6
	42"	125.2
	36"	146.1
	30"	175.3
	24"	180.0

MULLION SPAN (IN.)	LOAD WIDTH (IN.)	(1) ALLOWABLE (2) PRESSURE (PSF)
84"	96"	47.0
	90"	50.1
	84"	53.7
	78"	57.8
	72"	62.6
	66"	68.3
	60"	75.1
	54"	83.5
	48"	93.9
	42"	107.3
	36"	125.2
	30"	150.2
	24"	180.0
96"	96"	41.1
	90"	43.8
	84"	47.0
	78"	50.6
	72"	54.8
	66"	59.8
	60"	65.7
	54"	73.0
	48"	82.2
	42"	93.9
	36"	109.6
	30"	131.5
	24"	164.3
	18"	180.0
108"	96"	36.5
	90"	39.0
	84"	41.7
	78"	44.9
	72"	48.7
	66"	53.1
	60"	58.4
	54"	64.9
	48"	73.0
	42"	83.5
	36"	97.4
	30"	116.9
	24"	146.1
	18"	180.0

MULLION SPAN (IN.)	LOAD WIDTH (IN.)	(1) ALLOWABLE (2) PRESSURE (PSF)
120"	96"	32.9
	90"	35.1
	84"	37.6
	78"	40.4
	72"	43.8
	66"	47.8
	60"	52.6
	54"	58.4
	48"	65.7
	42"	75.1
	36"	87.6
	30"	105.2
	24"	131.5
	18"	175.3
132"	96"	27.2
	90"	29.0
	84"	31.1
	78"	33.5
	72"	36.3
	66"	39.6
	60"	43.6
	54"	48.4
	48"	54.4
	42"	62.2
	36"	72.6
	30"	87.1
	24"	108.9
	18"	145.2
144"	72"	28.0
	66"	30.5
	60"	33.5
	54"	37.3
	48"	41.9
	42"	47.9
	36"	55.9
	30"	67.1
	24"	83.9
	18"	111.8

PANEL LOAD TABLE

PANEL WIDTH (IN.)	(3) CLIP SPACING (IN.)	(1) ALLOWABLE (2) PRESSURE (PSF)
36"	12.5"	180.0
	20"	127.3
42"	12.5"	154.3
	20"	109.1
48"	12.5"	120.0
	20"	95.5
54"	12.5"	106.7
	20"	84.8
60"	12.5"	90.0
	20"	76.4
66"	12.5"	109.1
	20"	69.4

PANEL WIDTH (IN.)	(3) CLIP SPACING (IN.)	(1) ALLOWABLE (2) PRESSURE (PSF)
72"	12.5"	100.0
	20"	63.6
78"	12.5"	92.3
	20"	58.7
84"	12.5"	85.0
	20"	54.5
90"	12.5"	80.0
	20"	50.9
96"	12.5"	75.0
	20"	47.7

NOTE: ALL SHAPED LOUVER PANELS ARE RESTRICTED TO A FRAME CLIP SPACING OF 12.5" O.C. 20" CLIP SPACING IS ONLY ALLOWED ON RECTANGULAR & SQUARE SHAPE LOUVERS.

LOAD TABLE NOTES
(APPLICABLE TO MULLION & PANEL LOAD TABLES):

1) ALLOWABLE PRESSURE IS BOTH POSITIVE & NEGATIVE.
2) THE LESSER LOAD FROM THE MULLION LOAD TABLE & THE PANEL LOAD TABLE SHALL CONTROL AS THE ALLOWABLE FOR THE ENTIRE MULLED UNIT.

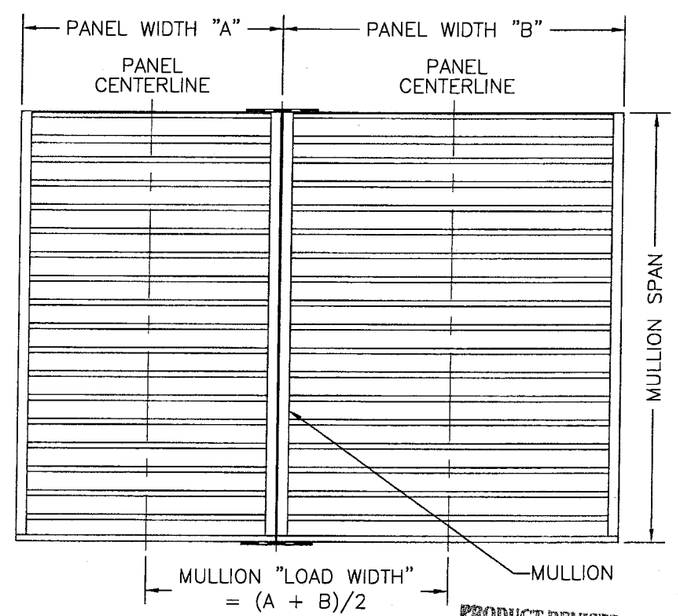

LOUVER ASSEMBLY

MULLION LOAD TABLE INSTRUCTIONS:

1. DETERMINE REQUIRED DESIGN PRESSURE OF THE LOUVER ASSEMBLY.
2. DETERMINE THE REQUIRED MULLION SPAN OF THE LOUVER ASSEMBLY.
3. DETERMINE THE PANEL WIDTH "A" & "B" AND THE MULLION LOAD WIDTH.
4. GO TO THE MULLION LOAD TABLE AND CHECK THE ALLOWABLE PRESSURE FOR THE RESPECTIVE MULLION SPAN/LOAD WIDTH.
5. GO TO THE PANEL LOAD TABLE AND CHECK THE ALLOWABLE PRESSURE FOR EACH PANEL WIDTH.
6. IF ALL THE ALLOWABLE PRESSURES OF INSTRUCTIONS 4 & 5 ARE GREATER THAN THE REQUIRED DESIGN PRESSURE, THE ASSEMBLY IS ACCEPTABLE.
7. IF ANY ALLOWABLE PRESSURE OF INSTRUCTIONS 4 & 5 ARE LESS THAN THE REQUIRED DESIGN PRESSURE, THE ASSEMBLY IS NOT ACCEPTABLE UNLESS THE ASSEMBLY SIZE OR PRESSURE IS REDUCED AND INSTRUCTIONS FROM 1 TO 7 ARE FOLLOWED AGAIN.

PRODUCT REVISED
as complying with the Florida Building Code
Acceptance No. 05-0326.01
Expiration Date 04/22/07
By
Miami Dade Product Control Division

DRAWN BY: K.P.S.	CHECKED BY: W.W.S.
PLOT: 1=24	DATE: 04/03/03

NO.	REVISION DESCRIPTION	BY	DATE
A3	REDUCED CLIP SPACING	W.W.S.	08/22/05

DRAWING TITLE
LE-32 LOUVER SYSTEM

MANUFACTURER
AMERICAN WARMING & VENTILATING
7301 INTERNATIONAL DRIVE
HOLLAND, OHIO 43528
419-865-5000

CONSULTANTS
W. W. SCHAEFER ENGINEERING & CONSULTING, P.A.
8895 N. MILITARY TRAIL, SUITE C-204
PALM BEACH GARDENS, FL 33410
PHONE: 561-775-4902 FAX: 561-775-4903

CERTIFICATION
AUG 22 2005
WARREN W. SCHAEFER, P.E.
P.E. NO. 44135

DRAWING NO. 1217 REV. A

SHEET NO. 3 OF 12

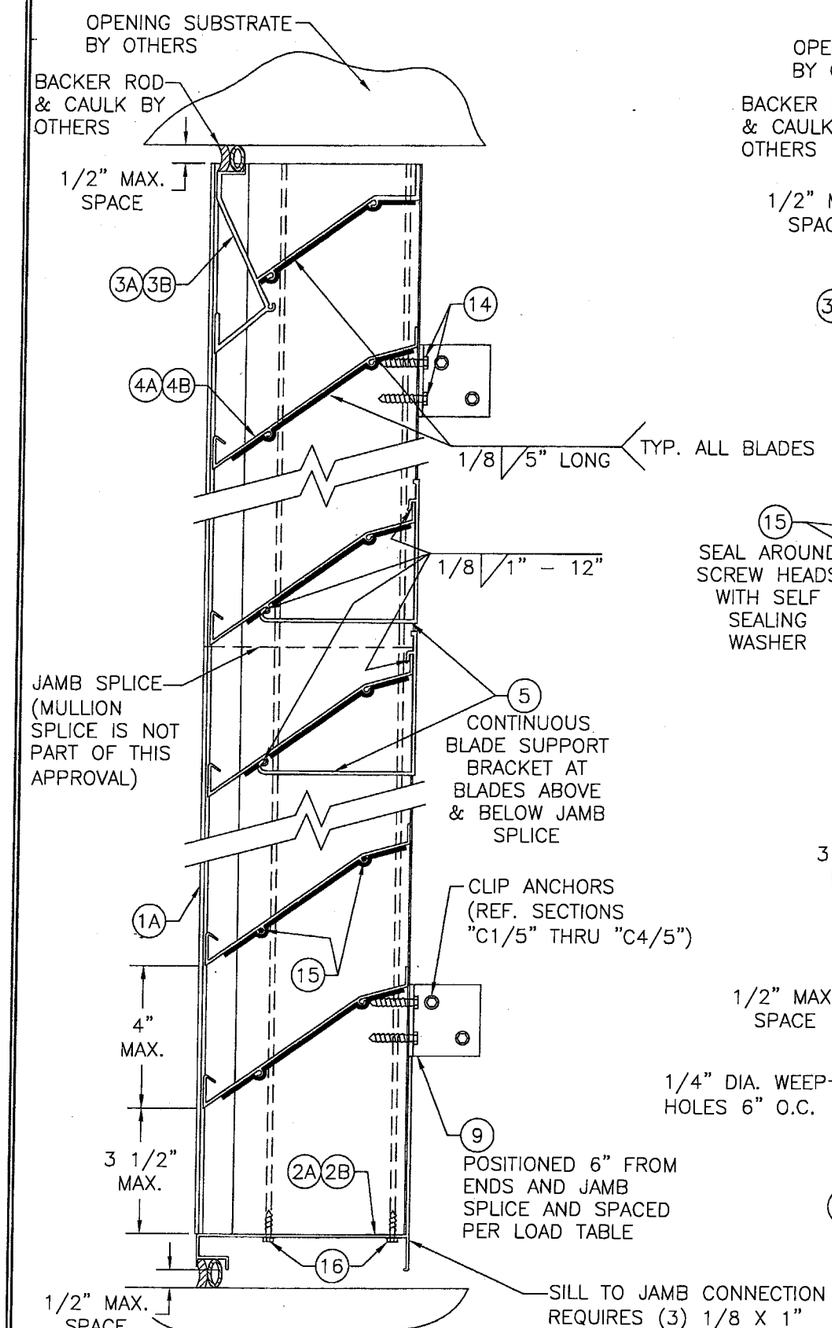

SECTION A1/4
SCALE: 3"=1'-0"
(STANDARD LOUVER)

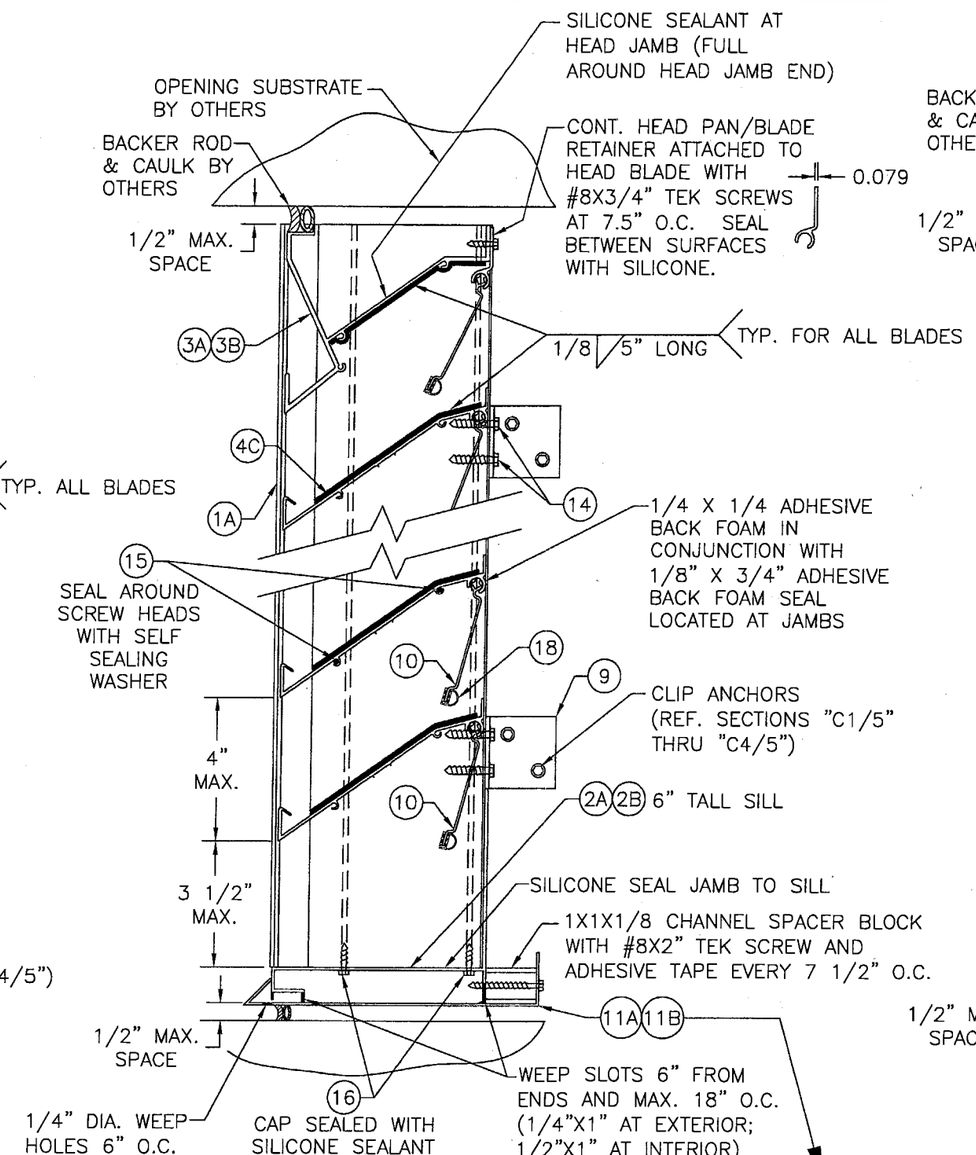

SECTION A2/4
SCALE: 3"=1'-0"
(WATER RESISTANT LOUVER)

1) MANUAL ROTO-OPERATOR SHOWN ON SHEET 9 OF 11 IS PART OF THIS SECTION.
2) INSTALLATIONS OF WATER RESISTANT LOUVERS ARE LIMITED TO 33 FT. ELEVATION
3) ALL OUTSIDE CORNERS ARE TO BE SEALED WITH SILICONE SEALANT.

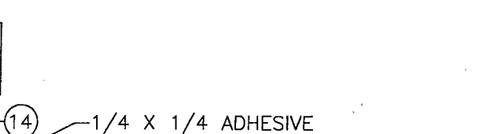

11A SILL PAN

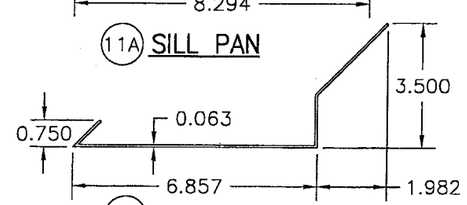

11B SILL PAN

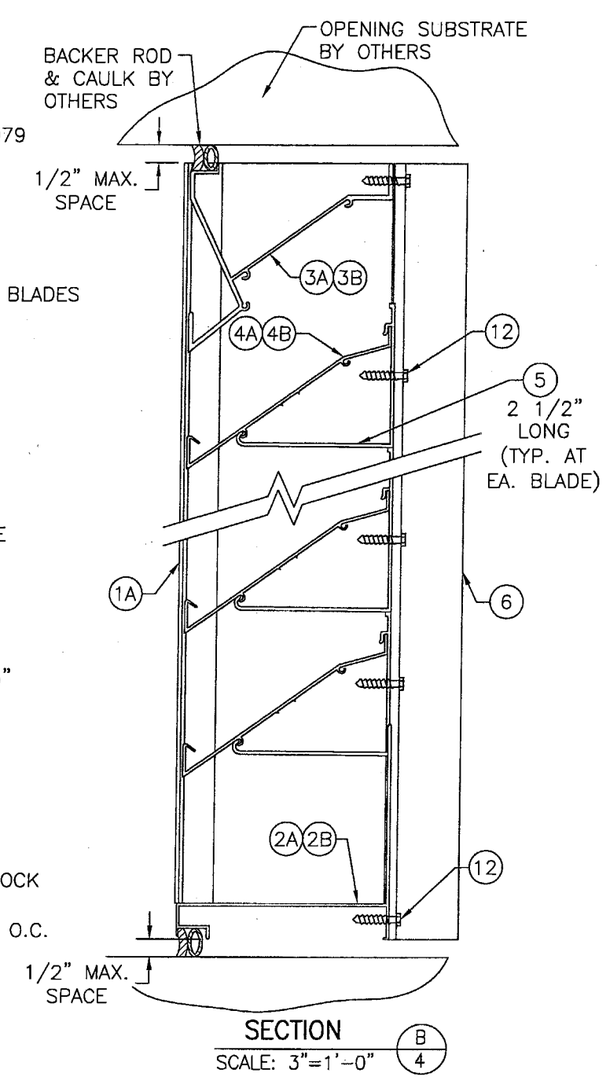

SECTION B/4
SCALE: 3"=1'-0"

NOTE: ALL SECTIONS ON THIS SHEET SHOW THE COMBINATION OF SCREWED & WELDED BLADE END CONSTRUCTION. FOR SCREWED ONLY END CONSTRUCTION, SEE DETAILS ON SHEET 7.

DETAILS ON SHEET 7 OF 12 ARE NOT RATED FOR WATER RESISTANCE AS STATED IN GENERAL NOTE NO. 11

PRODUCT REVISED
as complying with the Florida Building Code
Acceptance No. 05-0328.01
Expiration Date 04/22/09
By
Miami-Dade Product Control Division

DRAWN BY: K.P.S.	CHECKED BY: W.W.S.
PLOT: 1=4	DATE: 04/03/03

NO.	REVISION DESCRIPTION	BY	DATE

DRAWING TITLE
LE-32 LOUVER SYSTEM

MANUFACTURER
AMERICAN WARMING & VENTILATING
7301 INTERNATIONAL DRIVE
HOLLAND, OHIO 43528
419-865-5000

CONSULTANTS
W. W. SCHAEFER ENGINEERING & CONSULTING, P.A.
8895 N. MILITARY TRAIL; SUITE C-204
PALM BEACH GARDENS, FL 33410
PHONE: 561-775-4902 FAX: 561-775-4903

CERTIFICATION
AUG 22 2005
WARREN W. SCHAEFER, P.E.
P.E. NO. 44135

DRAWING NO. 1217 REV. A

SHEET NO. 4 OF 12

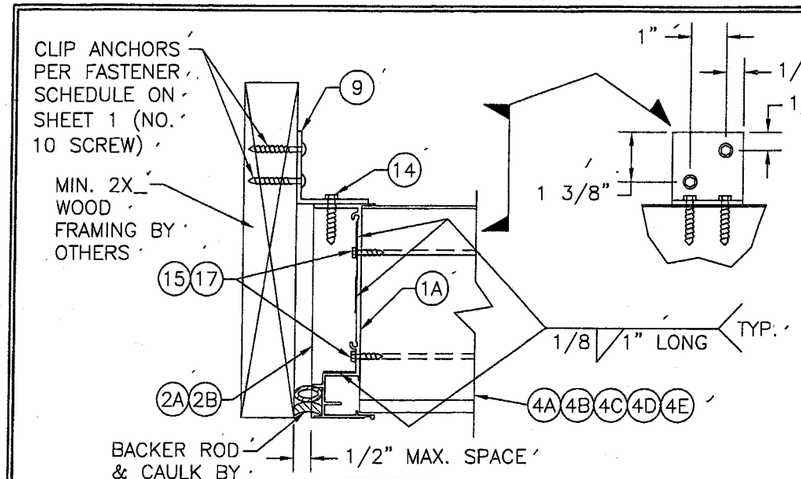

SECTION C1/5
SCALE: 3"=1'-0"
(TO WOOD)

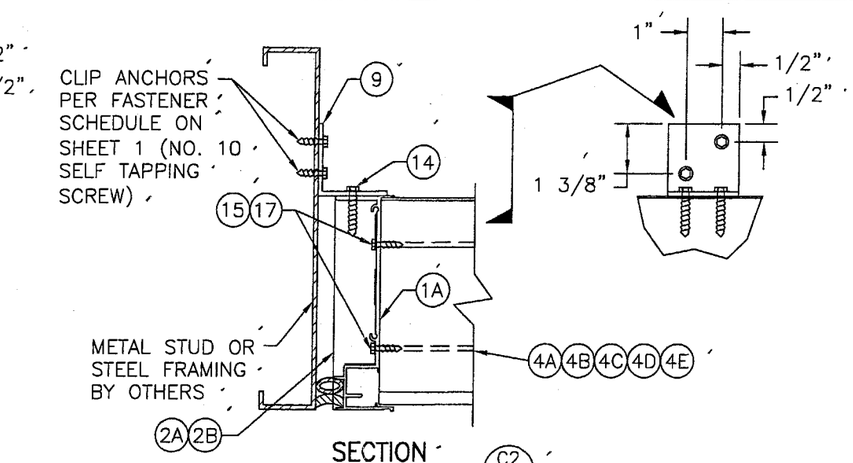

SECTION C2/5
SCALE: 3"=1'-0"
(OPTION 1 TO METAL STUD OR STEEL)
(SEE SECTION "C1" FOR DETAIL NOT SHOWN)

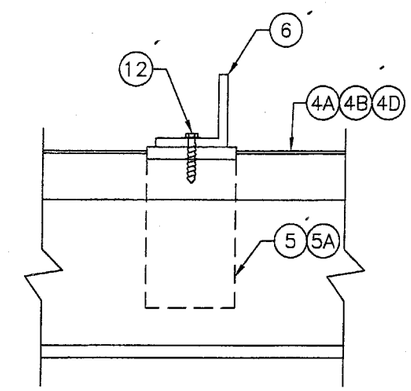

SECTION D/5
SCALE: 3"=1'-0"

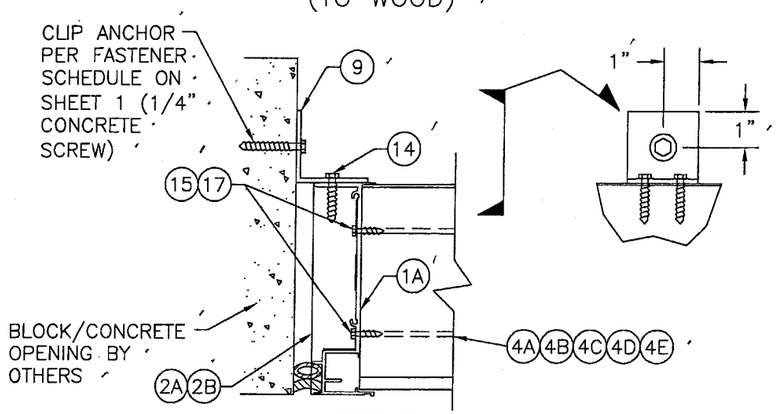

SECTION C3/5
SCALE: 3"=1'-0"
(TO BLOCK/CONCRETE)
(SEE SECTION "C1" FOR DETAIL NOT SHOWN)

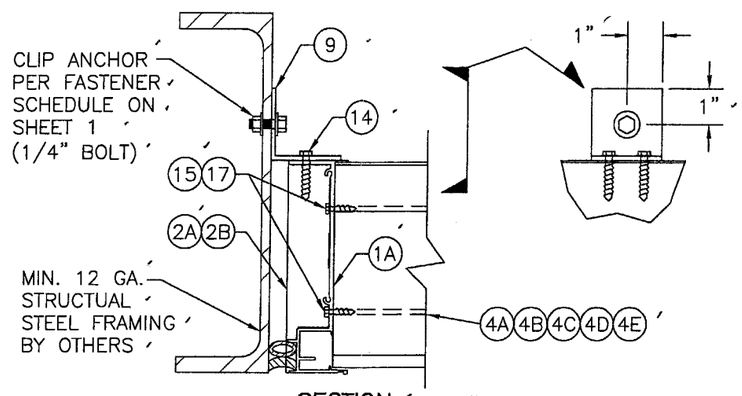

SECTION C4/5
SCALE: 3"=1'-0"
(OPTION 2 TO METAL STUD OR STEEL)
(SEE SECTION "C1" FOR DETAIL NOT SHOWN)

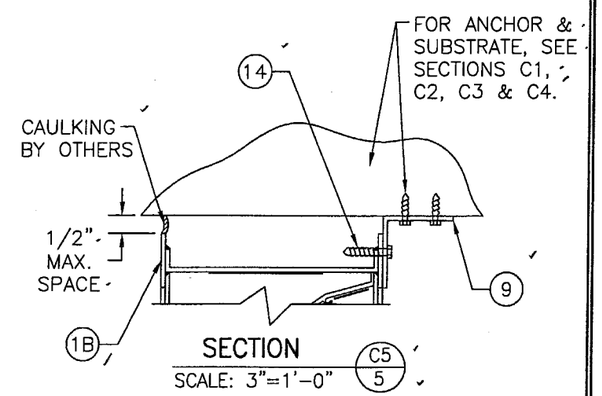

SECTION C5/5
SCALE: 3"=1'-0"

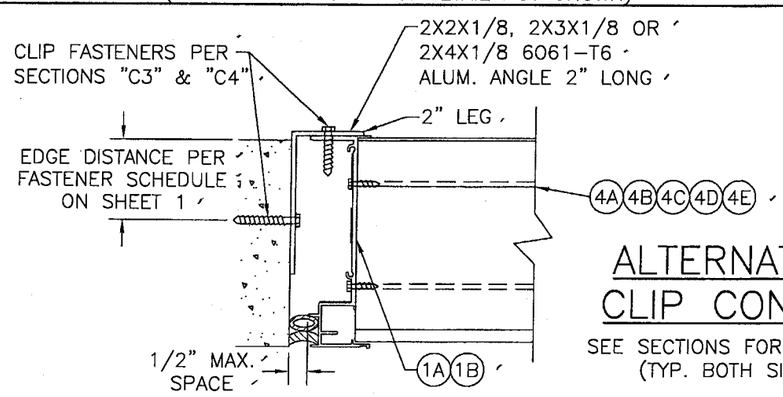

TO CONCRETE/BLOCK OR STEEL

ALTERNATE PANEL CLIP CONNECTIONS

SEE SECTIONS FOR DETAIL NOT SHOWN
(TYP. BOTH SIDES OF OPENING)

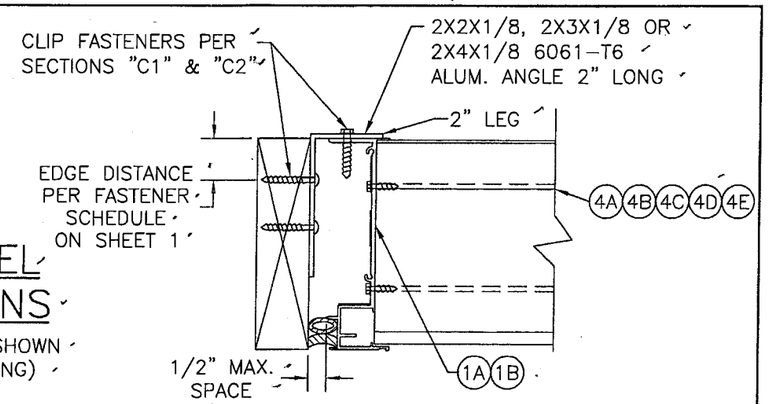

TO WOOD/METAL FRAMING, BUCK OR STEEL

PRODUCT REVISED
as complying with the Florida Building Code
Acceptance No. 05-0328.01
Expiration Date 04/22/09
By
Miami-Dade Product Control Division

DRAWN BY: K.P.S.	CHECKED BY: W.W.S.
PLOT: 1=4	DATE: 04/03/03

NO.	REVISION DESCRIPTION	BY	DATE

DRAWING TITLE
LE-32 LOUVER SYSTEM

MANUFACTURER
AMERICAN WARMING & VENTILATING
7301 INTERNATIONAL DRIVE
HOLLAND, OHIO 43528
419-865-5000

CONSULTANTS
W. W. SCHAEFER ENGINEERING & CONSULTING, P.A.
8895 N. MILITARY TRAIL; SUITE C-204
PALM BEACH GARDENS, FL 33410
PHONE: 561-775-4902 FAX: 561-775-4903

CERTIFICATION
AUG 22 2005
WARREN W. SCHAEFER, P.E.
P.E. NO. 44135

DRAWING NO. 1217
REV. A
SHEET NO. 5 OF 12

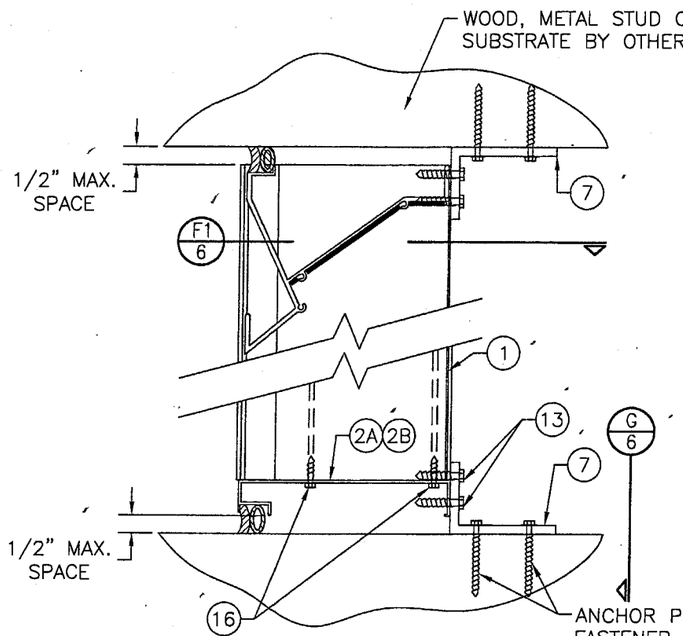

SECTION E1 6
SCALE: 3"=1'-0"
(INTO WOOD, METAL STUD OR STEEL OPENING)

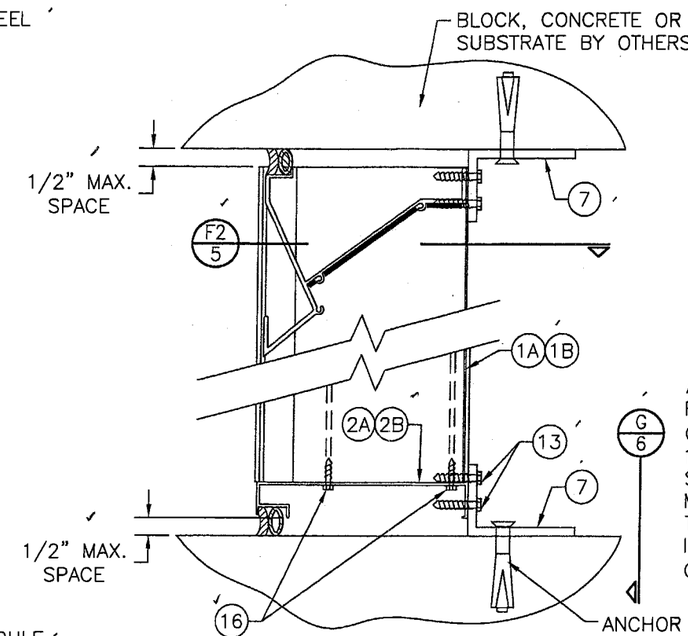

SECTION E2 6
SCALE: 3"=1'-0"
(INTO CONCRETE OR STRUCTURAL STEEL OPENING)

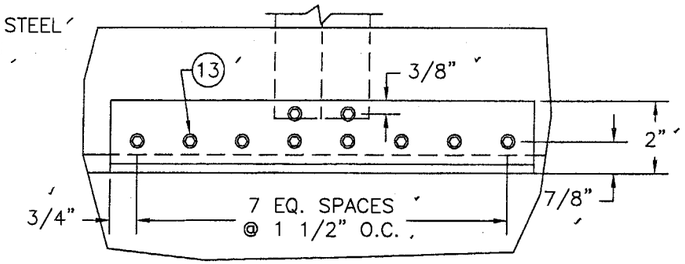

VIEW G 6
SCALE: 3"=1'-0"
(SEE SECTIONS "E1" & "E2" FOR ANCHORS TO OPENING)

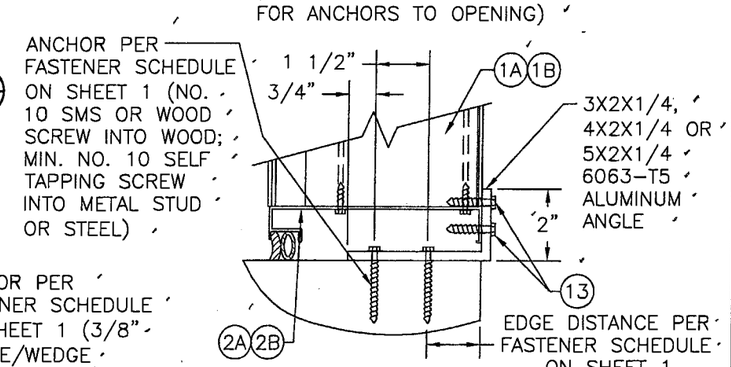

OPTIONAL SECTION E1 6
SCALE: 3"=1'-0"
SILL SHOWN; HEAD SIMILAR

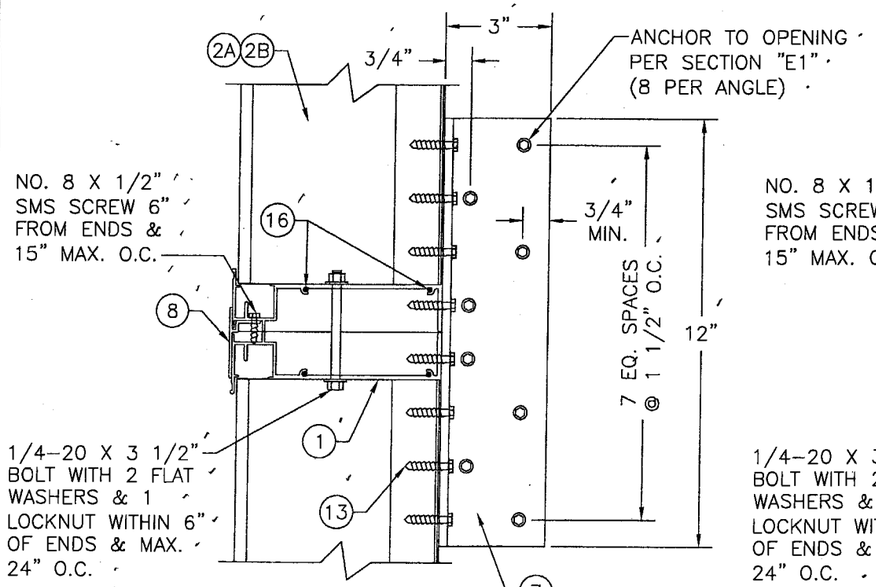

SECTION F1 6
SCALE: 3"=1'-0"

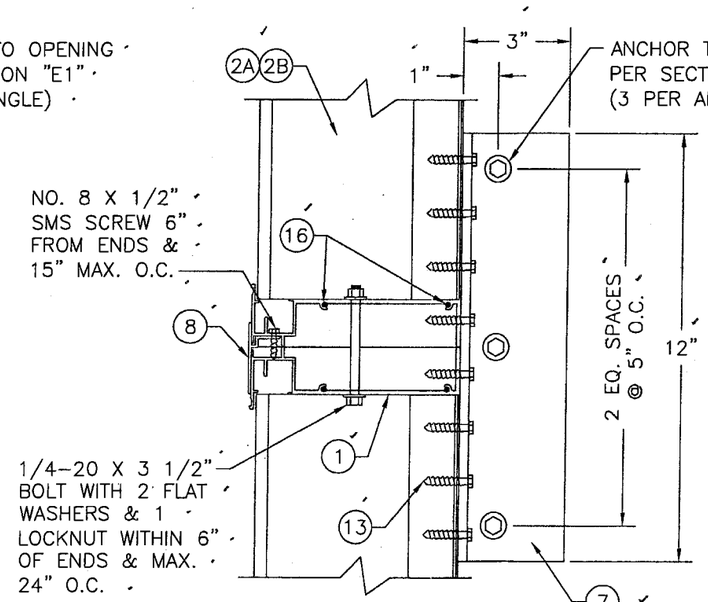

SECTION F2 6
SCALE: 3"=1'-0"

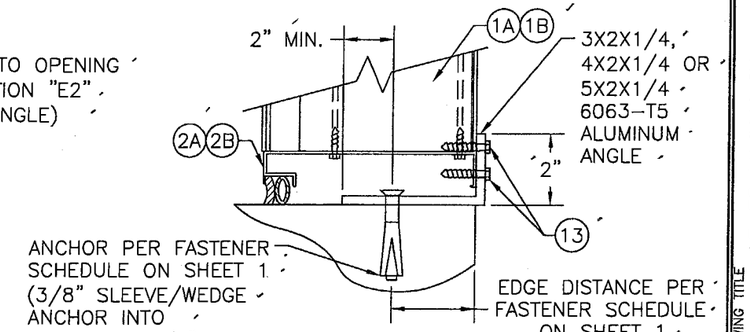

OPTIONAL SECTION E2 6
SCALE: 3"=1'-0"
SILL SHOWN; HEAD SIMILAR

PRODUCT REVISED
as complying with the Florida Building Code
Acceptance No. 05-0328.01
Expiration Date 04/22/09
By
Miami-Dade Product Control Division

DRAWN BY: K.P.S.	CHECKED BY: W.W.S.
PLOT: 1=4	DATE: 04/03/03

NO.	REVISION DESCRIPTION	BY	DATE

DRAWING TITLE
LE-32 LOUVER SYSTEM

MANUFACTURER
AMERICAN WARMING & VENTILATING
7301 INTERNATIONAL DRIVE
HOLLAND, OHIO 43528
419-865-5000

CONSULTANTS
W. W. SCHAEFER ENGINEERING & CONSULTING, P.A.
8895 N. MILITARY TRAIL; SUITE C-204
PALM BEACH GARDENS, FL 33410
PHONE: 561-775-4902 FAX: 561-775-4903

CERTIFICATION
AUG 22 2005
WARREN W. SCHAEFER, P.E.
P.E. NO. 44135

DRAWING NO.	REV.
1217	A

SHEET NO. 6 OF 12

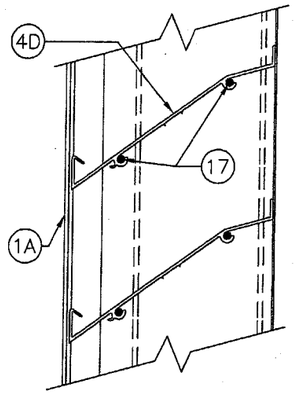

OPTIONAL BLADE DETAIL
WITH SCREWED END CONSTRUCTION
(STANDARD LOUVER)

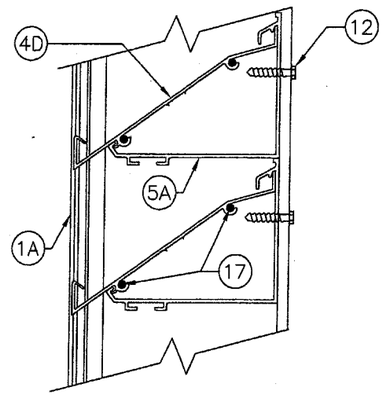

OPTIONAL BLADE SUPPORT BRACKET
DETAIL WITH SCREWED END CONSTRUCTION

DETAILS SHOWN ON THIS SHEET ARE NOT WATER RESISTANT UNLESS ALL BLADE END CONNECTIONS ARE SCREWED & WELDED AS SHOWN ON SHEET 4 OF 12.

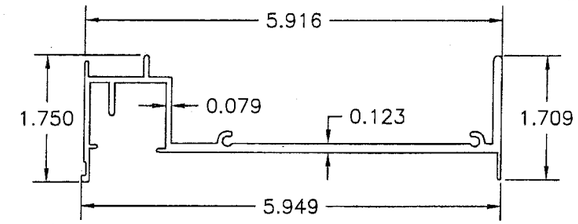

1A STANDARD
STRAIGHT JAMB

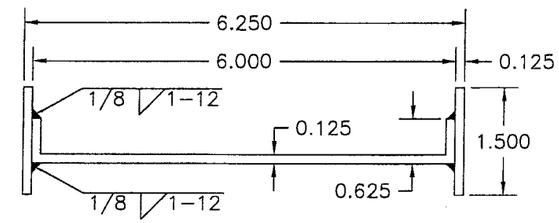

1B RADIUS JAMB

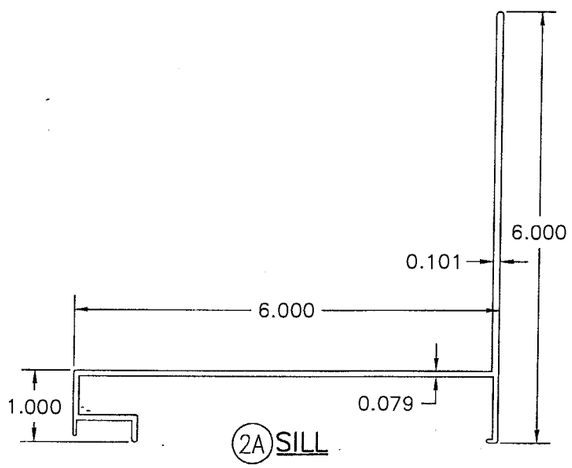

2A SILL

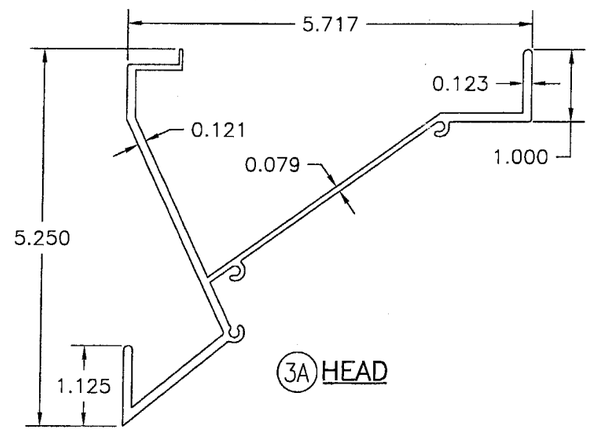

3A HEAD

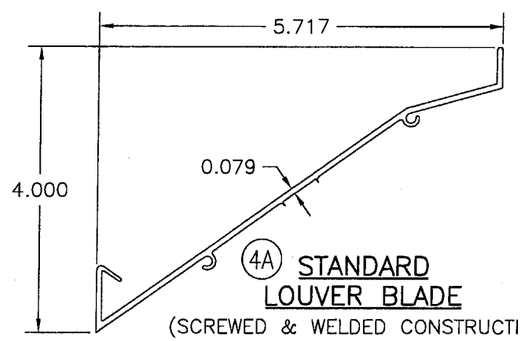

4A STANDARD
LOUVER BLADE
(SCREWED & WELDED CONSTRUCTION)

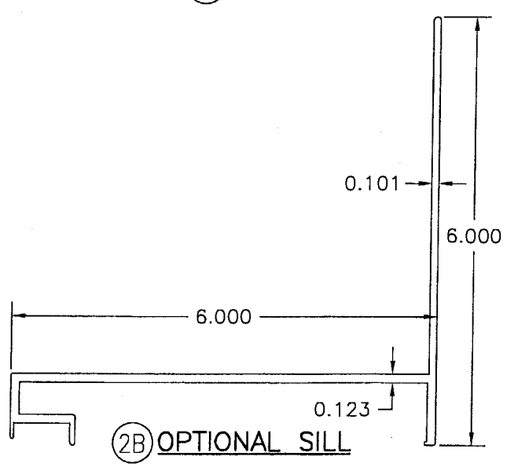

2B OPTIONAL SILL

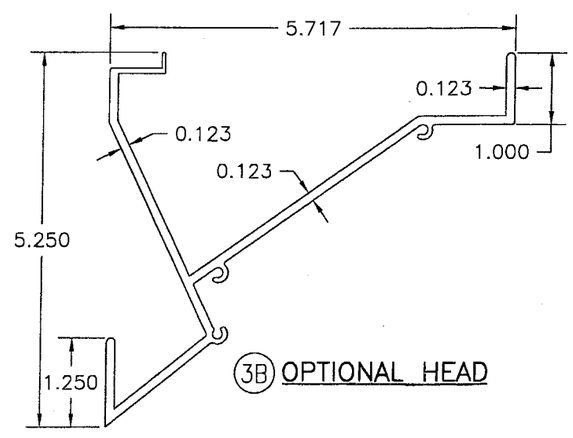

3B OPTIONAL HEAD

PRODUCT REVISED
as complying with the Florida
Building Code
Acceptance No. 05-0326.01
Expiration Date 04/22/09
By
Miami Dade Product Control
Division

DRAWN BY: K.P.S.	CHECKED BY: W.W.S.
PLOT: 1=4	DATE: 04/03/03

NO.	REVISION DESCRIPTION	BY	DATE

DRAWING TITLE
LE-32 LOUVER SYSTEM

MANUFACTURER
AMERICAN WARMING & VENTILATING
7301 INTERNATIONAL DRIVE
HOLLAND, OHIO 43528
419-865-5000

CONSULTANTS
W. W. SCHAEFER ENGINEERING & CONSULTING, P.A.
8895 N. MILITARY TRAIL; SUITE C-204
PALM BEACH GARDENS, FL 33410
PHONE: 561-775-4902 FAX: 561-775-4903

CERTIFICATION
AUG 22 2005
WARREN W. SCHAEFER, P.E.
P.E. NO. 44135

DRAWING NO. 1217
REV. A
SHEET NO. 7 OF 12

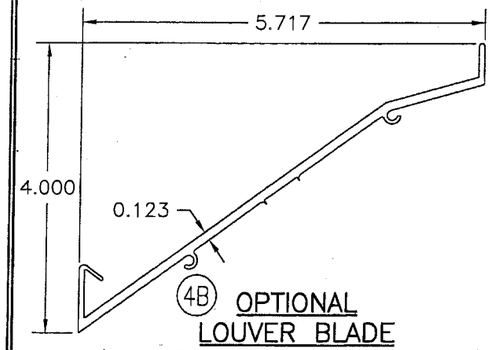

(4B) OPTIONAL LOUVER BLADE
(SCREWED & WELDED CONSTRUCTION)

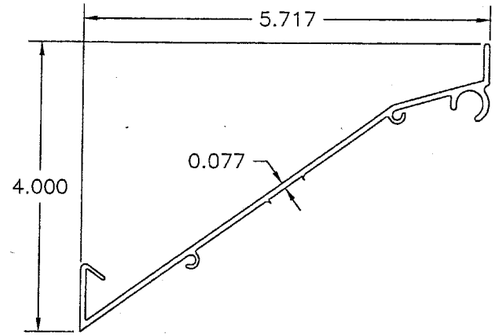

(4C) WATER RESISTANT LOUVER BLADE
(SCREWED & WELDED CONSTRUCTION)

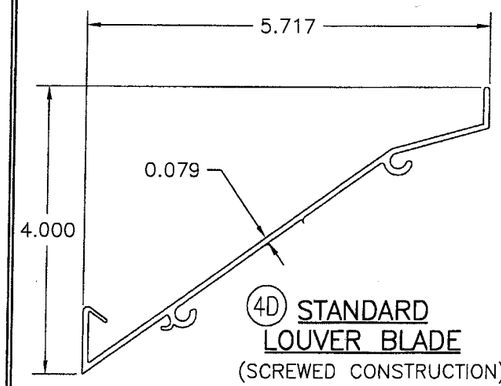

(4D) STANDARD LOUVER BLADE
(SCREWED CONSTRUCTION)

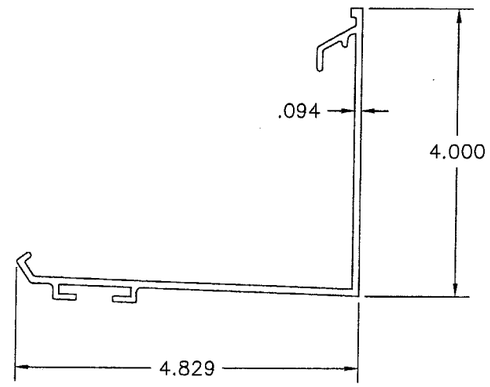

(5A) BLADE SUPPORT BRACKET
(SCREWED CONSTRUCTION)

ITEM #		ITEM DESCRIPTION	MANUFACTURER/NOTES
		PARTS	
1A	STANDARD STRAIGHT JAMB		6063–T6 ALUMINUM
1B	RADIUS JAMB		5052–H32 ALUMINUM
2A	SILL		6063–T6 ALUMINUM
2B	OPTIONAL SILL		6063–T5 ALUMINUM
3A	HEAD		6063–T5 ALUMINUM
3B	OPTIONAL HEAD		6063–T5 ALUMINUM
4A	STANDARD LOUVER BLADE (SCREWED & WELDED ENDS)		6063–T5 ALUMINUM
4B	OPTIONAL LOUVER BLADE (SCREWED & WELDED ENDS)		6063–T5 ALUMINUM
4C	(1) WATER RESISTANT LOUVER BLADE (SCREWED & WELDED ENDS)		6063–T5 ALUMINUM
4D	SCREWED END LOUVER BLADE		6063–T5 ALUMINUM
5A	BLADE SUPPORT BRACKET		6063–T5 ALUMINUM (USED WITH BLADE 4D)
5	BLADE SUPPORT BRACKET		6063–T5 ALUMINUM (USED WITH BLADES 4A, 4B & 4C)
6	BLADE SUPPORT ANGLE		6063–T5 ALUMINUM
7	MULLION END SUPPORT ANGLE		6061–T6 ALUMINUM
8	MULLION COVER		6063–T6 ALUMINUM
9	SIDE JAMB CLIP ANGLE		6061–T6 ALUMINUM
10	DAMPER BLADE		6063–T5 ALUMINUM (USED WITH PART 4B)
11A	STANDARD SILL PAN		16 GA. 5052–H32 ALUMINUM
11B	OPTIONAL SILL PAN		16 GA. 5052–H32 ALUMINUM
		FASTENERS	
12	1/4–14 X 1 1/4" HILTI TEK SCREW OR		1 THROUGH SUPPORT ANGLE AT EACH SUPPORT BRACKET AND AT HEAD & SILL
13	1/4–14 X 1 1/4" HILTI TEK SCREW		10 PER MULLION SUPPORT ANGLE INTO FRAME
14	1/4–14 X 1 1/4" HILTI TEK SCREW		2 PER EACH CLIP ANGLE INTO JAMB
15	NO. 8 X 3/4" S.S. SMS		2 THROUGH JAMB INTO EACH LOUVER BLADE
16	NO. 8 X 3/4" S.S. SMS		2 THROUGH SILL INTO EACH SIDE & MULLION JAMB
17	1/4–20 X 1 1/2" TYPE "F" SCREW		2 THROUGH JAMB INTO EACH BLADE LOUVER
		SEALS & SEALANTS	
18		BULB SEAL	MCL 743091

(1) PARTS 4C & 10 SHALL BE USED IN PLACE OF PART 4A OR 4B WHEN LOUVER IS REQUIRED TO RESIST WATER PENETRATION.

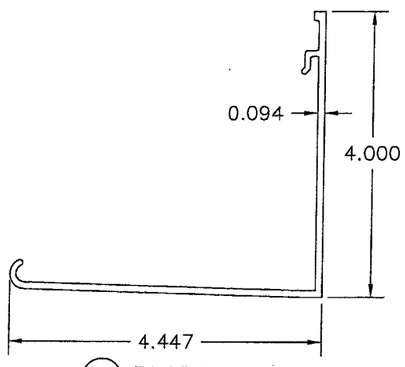

(5) BLADE SUPPORT BRACKET
(SCREWED & WELDED CONSTRUCTION)

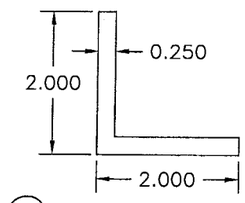

(6) BLADE SUPPORT ANGLE

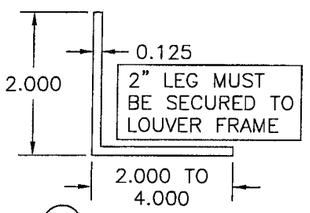

(9) SIDE JAMB CLIP ANGLE
LENGTH = 2"

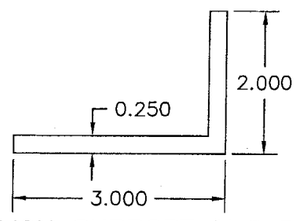

(7) MULLION SUPPORT ANGLE
LENGTH = 12"

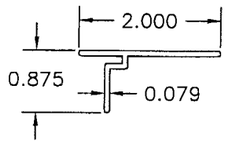

(8) MULLION COVER

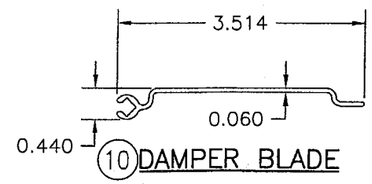

(10) DAMPER BLADE

PRODUCT REVISED
as complying with the Florida Building Code
Acceptance No. 05-0328.01
Expiration Date 09/22/09
By
Miami Dade Product Control Division

DRAWN BY: K.P.S.	CHECKED BY: W.W.S.
PLOT: 1=2	DATE: 04/03/03

NO.	REVISION DESCRIPTION	BY	DATE

DRAWING TITLE
LE-32 LOUVER SYSTEM

MANUFACTURER
AMERICAN WARMING & VENTILATING
7301 INTERNATIONAL DRIVE
HOLLAND, OHIO 43528
419-865-5000

CONSULTANTS
W. W. SCHAEFER ENGINEERING & CONSULTING, P.A.
8895 N. MILITARY TRAIL; SUITE C-204
PALM BEACH GARDENS, FL 33410
PHONE: 561-775-4902 FAX: 561-775-4903

CERTIFICATION
AUG 22 2005
WARREN W. SCHAEFER, P.E.
P.E. NO. 44135

DRAWING NO.	REV.
1217	A

SHEET NO. 8 OF 12

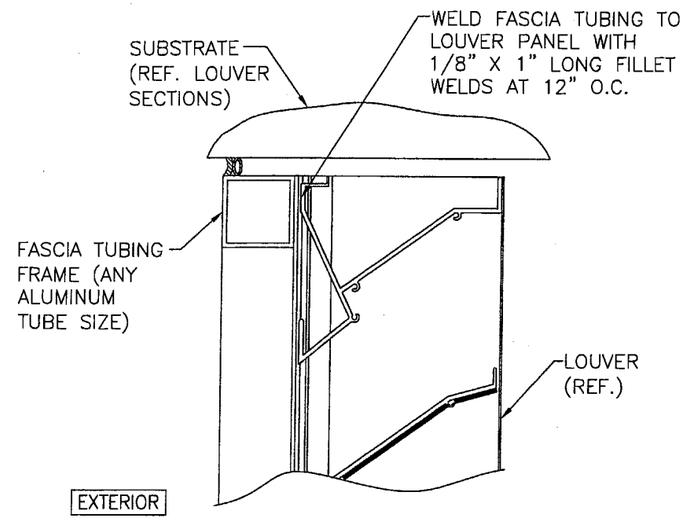

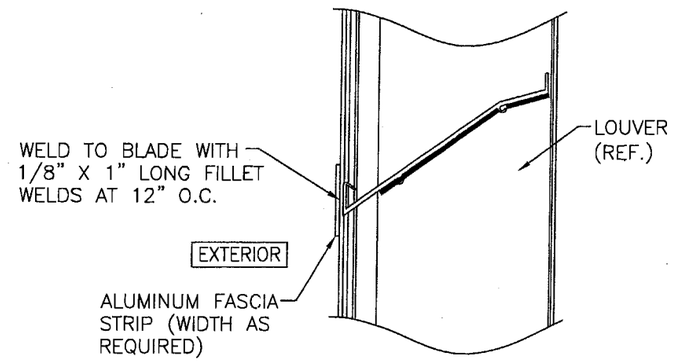

OPTIONAL FASCIA STRIP DETAIL

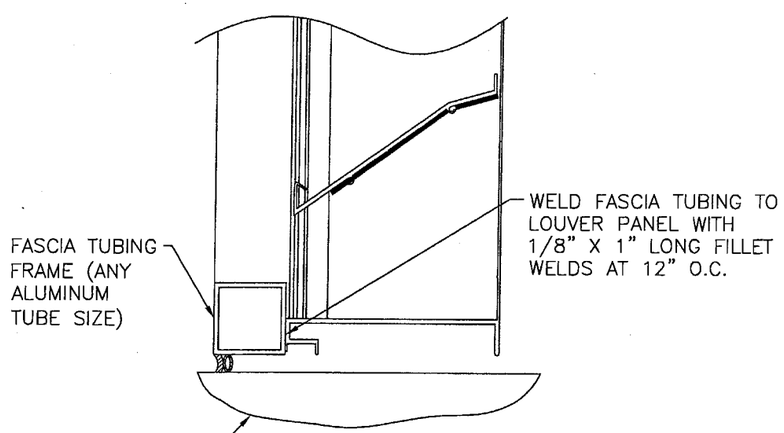

OPTIONAL FASCIA TUBING DETAIL

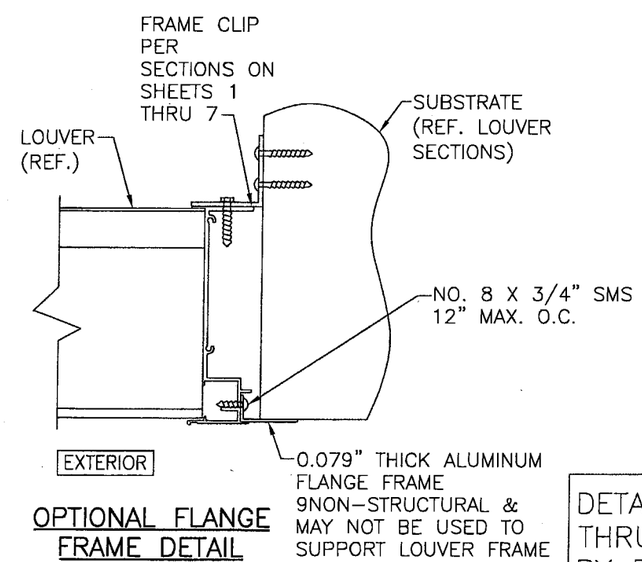

OPTIONAL FLANGE FRAME DETAIL

PRODUCT REVISED
as complying with the Florida Building Code
Acceptance No. 05-0328.01
Expiration Date 04/22/09
By
Miami Dade Product Control Division

DETAILS ON SHEETS 8 THRU 11 ARE GOVERNED BY DETAILS SHOWN ON SHEET 1 THRU 7.

DRAWN BY: K.P.S.	CHECKED BY: W.W.S.
PLOT: 1=4	DATE: 04/03/03

NO.	REVISION DESCRIPTION	BY	DATE

DRAWING TITLE
LE-32 LOUVER SYSTEM

MANUFACTURER
AMERICAN WARMING & VENTILATING
7301 INTERNATIONAL DRIVE
HOLLAND, OHIO 43528
419-865-5000

CONSULTANTS
W. W. SCHAEFER ENGINEERING & CONSULTING, P.A.
8895 N. MILITARY TRAIL; SUITE C-204
PALM BEACH GARDENS, FL 33410
PHONE: 561-775-4902 FAX: 561-775-4903

CERTIFICATION
AUG 22 2005
WARREN W. SCHAEFER, P.E.
P.E. NO. 44135

DRAWING NO. 1217
REV. A
SHEET NO. 9 OF 12

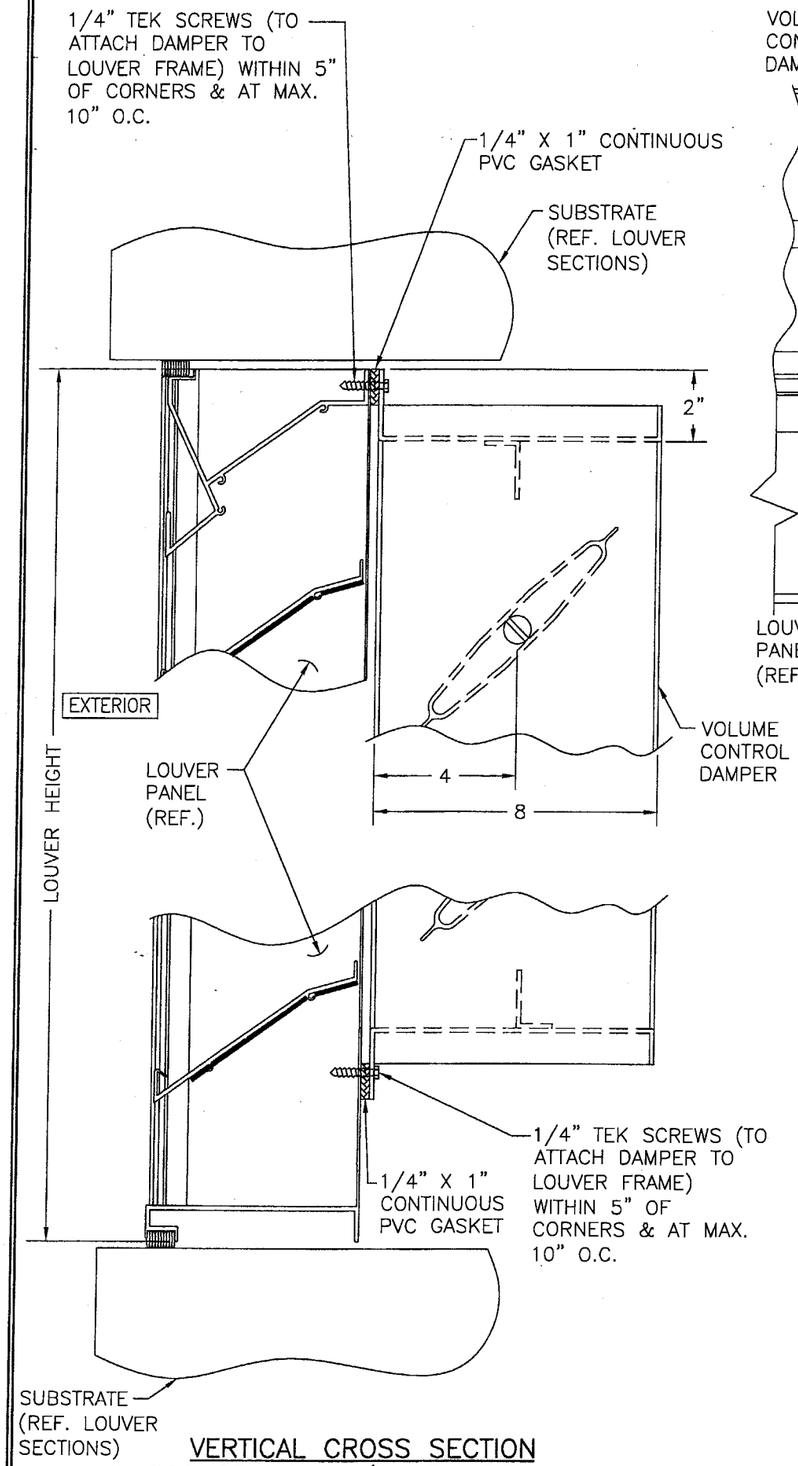

VERTICAL CROSS SECTION
VC-822 OR VC-28/29 DAMPER DETAIL

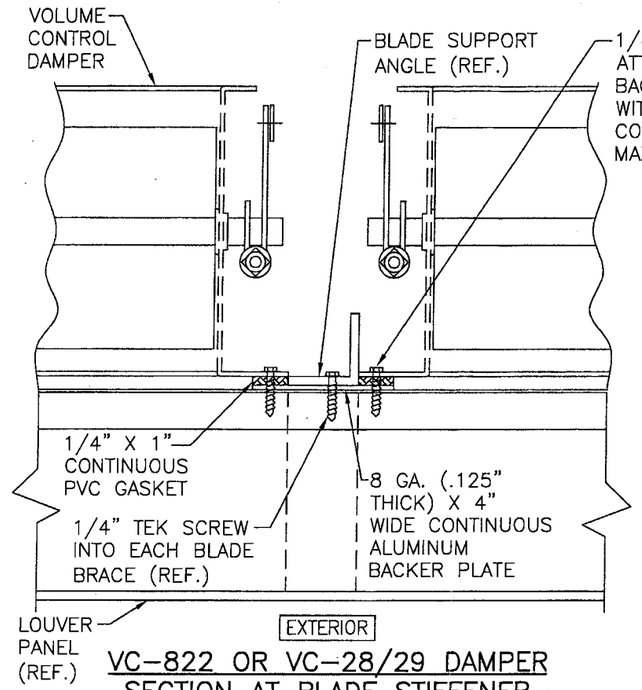

VC-822 OR VC-28/29 DAMPER
SECTION AT BLADE STIFFENER

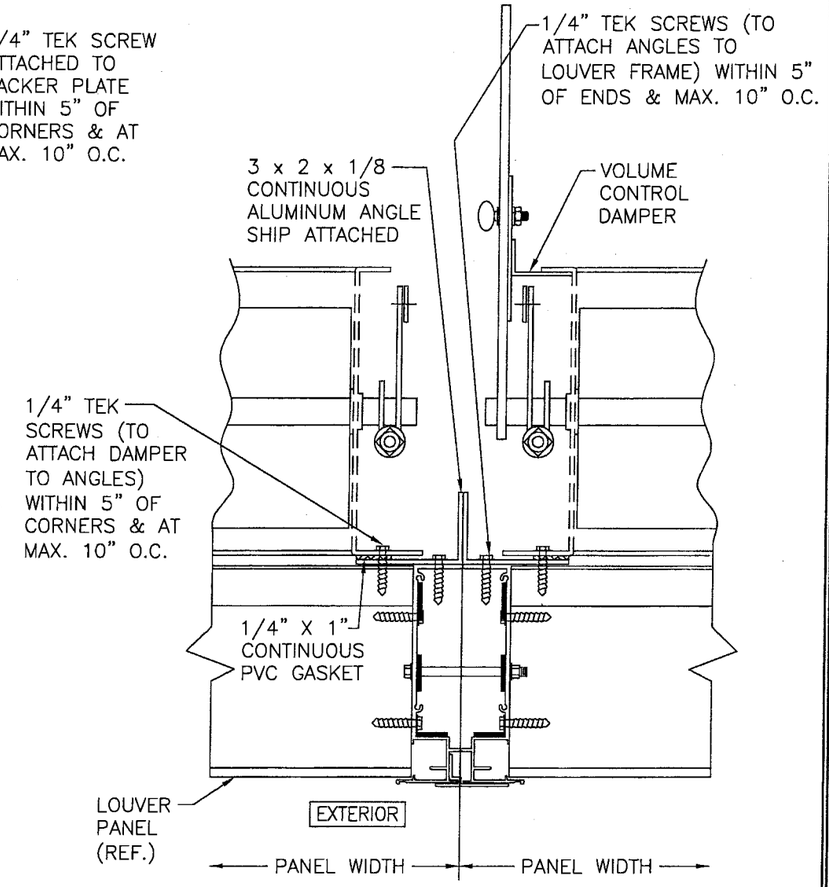

VC-822 OR VC-28/29 DAMPER
SECTION AT MULLION

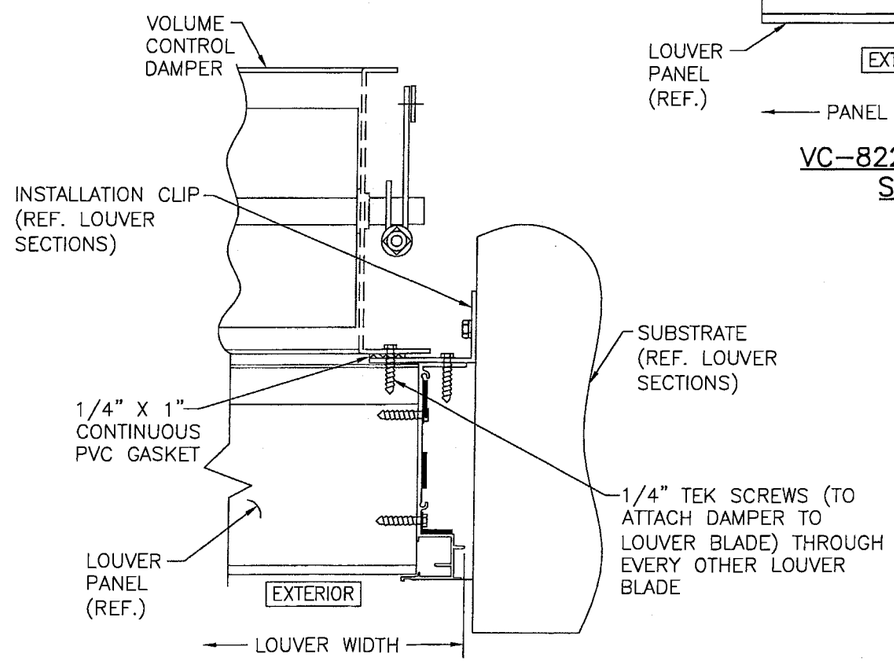

VC-822 OR VC-28/29
DAMPER JAMB DETAIL

PRODUCT REVISED
as complying with the Florida Building Code
Acceptance No. 05-0328.01
Expiration Date 04/22/09
By
Miami Dade Product Control Division

DETAILS ON SHEETS 8 THRU 11 ARE GOVERNED BY DETAILS SHOWN ON SHEET 1 THRU 7.

DRAWN BY: K.P.S.	CHECKED BY: W.W.S.
PLOT: 1=4	DATE: 04/03/03

NO.	REVISION DESCRIPTION	BY	DATE
A4	REDUCED INSTALLATION SCREW SPACING	W.W.S.	08/22/05

DRAWING TITLE
LE-32 LOUVER SYSTEM

MANUFACTURER
AMERICAN WARMING & VENTILATING
7301 INTERNATIONAL DRIVE
HOLLAND, OHIO 43528
419-865-5000

CONSULTANTS
W. W. SCHAEFER ENGINEERING & CONSULTING, P.A.
8895 N. MILITARY TRAIL; SUITE C-204
PALM BEACH GARDENS, FL 33410
PHONE: 561-775-4902 FAX: 561-775-4903

CERTIFICATION
AUG 22 2005
WARREN W. SCHAEFER, P.E.
P.E. NO. 44135

DRAWING NO. 1217 REV. A
SHEET NO. 10 OF 12

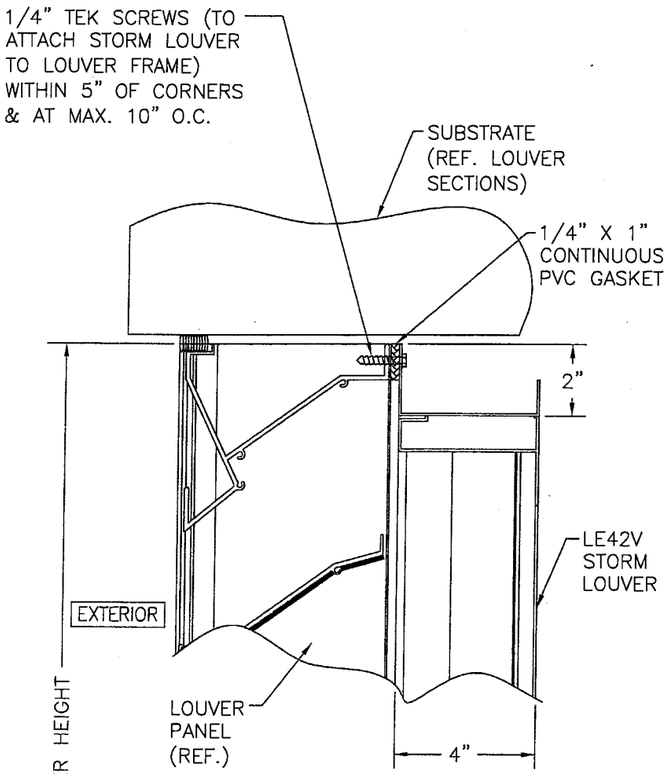

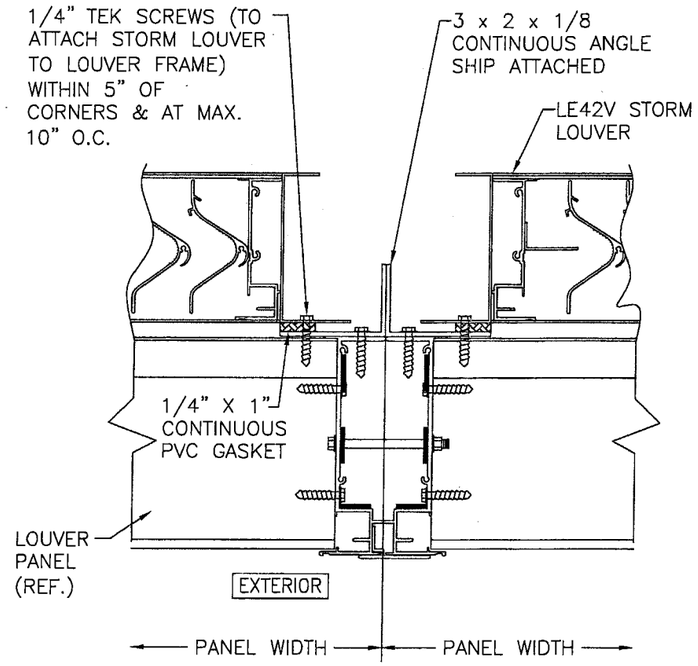

LE42V STORM LOUVER
SECTION AT MULLION

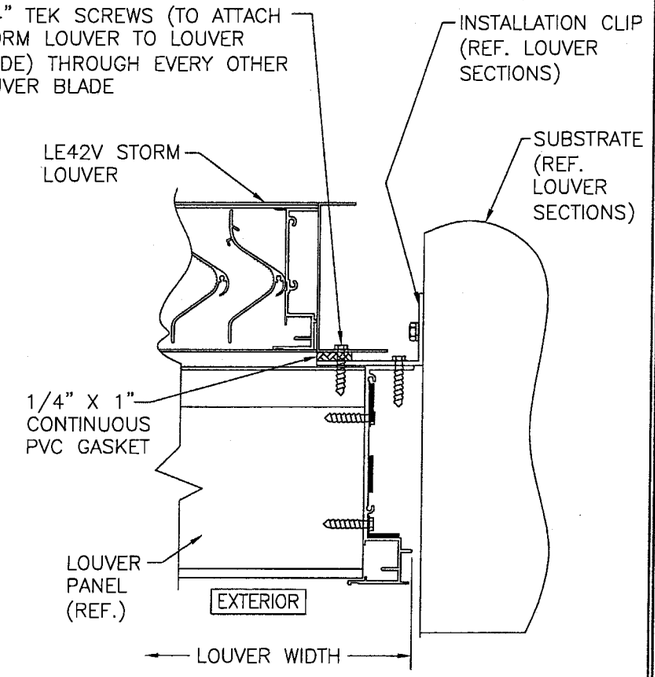

LE42V STORM LOUVER
JAMB DETAIL

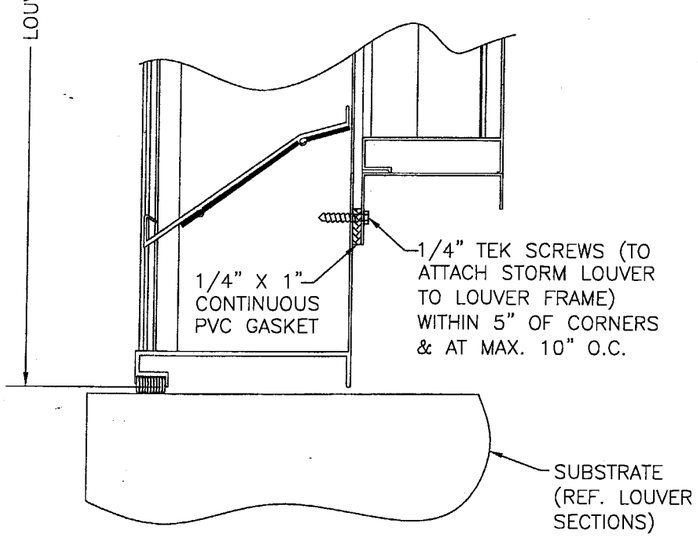

VERTICAL CROSS SECTION
LE42V STORM LOUVER DETAIL

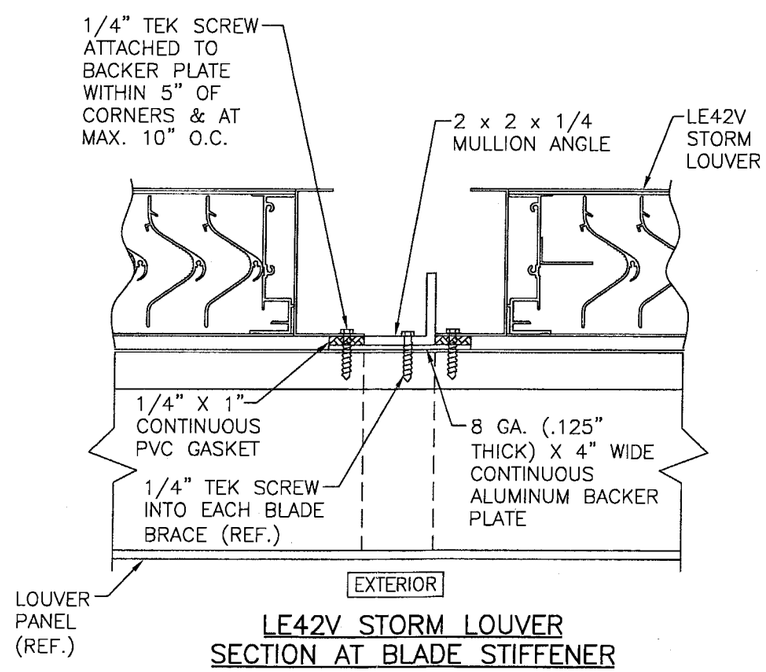

LE42V STORM LOUVER
SECTION AT BLADE STIFFENER

PRODUCT REVISED
as complying with the Florida Building Code
Acceptance No. 05-0328.01
Expiration Date 04/22/09
By
Miami Dade Product Control Division

DETAILS ON SHEETS 8 THRU 11 ARE GOVERNED BY DETAILS SHOWN ON SHEET 1 THRU 7.

DRAWN BY: K.P.S.	CHECKED BY: W.W.S.
PLOT: 1=4	DATE: 04/03/03

NO.	REVISION DESCRIPTION	BY	DATE
A4	REDUCED INSTALLATION SCREW SPACING	W.W.S.	08/22/05

DRAWING TITLE
LE-32 LOUVER SYSTEM

MANUFACTURER
AMERICAN WARMING & VENTILATING
7301 INTERNATIONAL DRIVE
HOLLAND, OHIO 43528
419-865-5000

CONSULTANTS
W. W. SCHAEFER ENGINEERING & CONSULTING, P.A.
8895 N. MILITARY TRAIL; SUITE C-204
PALM BEACH GARDENS, FL 33410
PHONE: 561-775-4902 FAX: 561-775-4903

CERTIFICATION
AUG 22 2005
WARREN W. SCHAEFER, P.E.
P.E. NO. 44135

DRAWING NO. 1217 | REV. A

SHEET NO. 11 OF 12

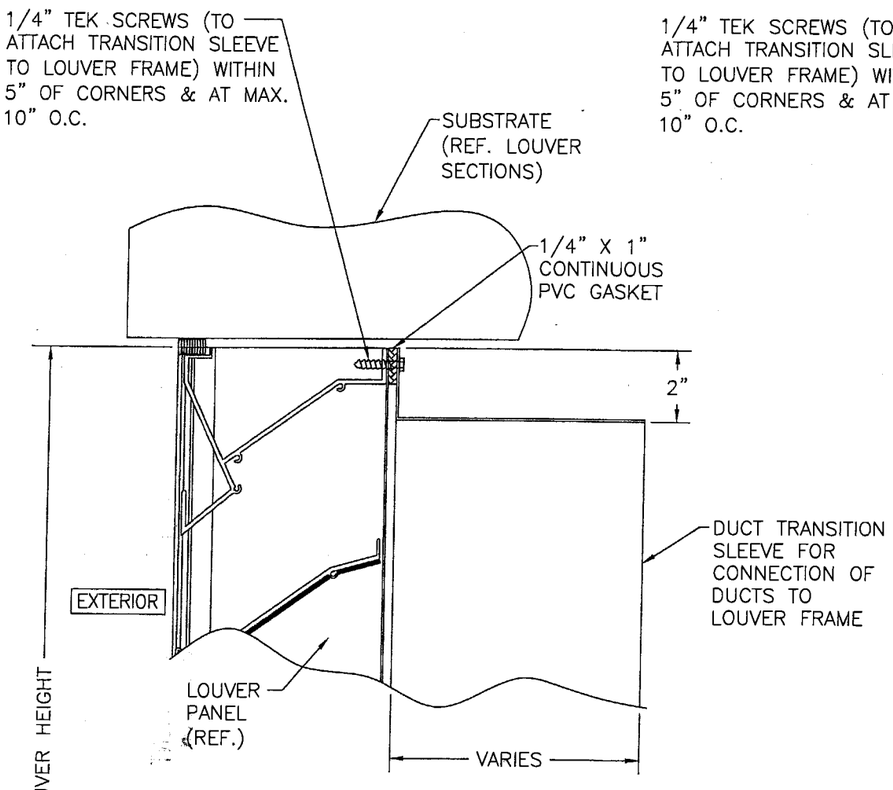

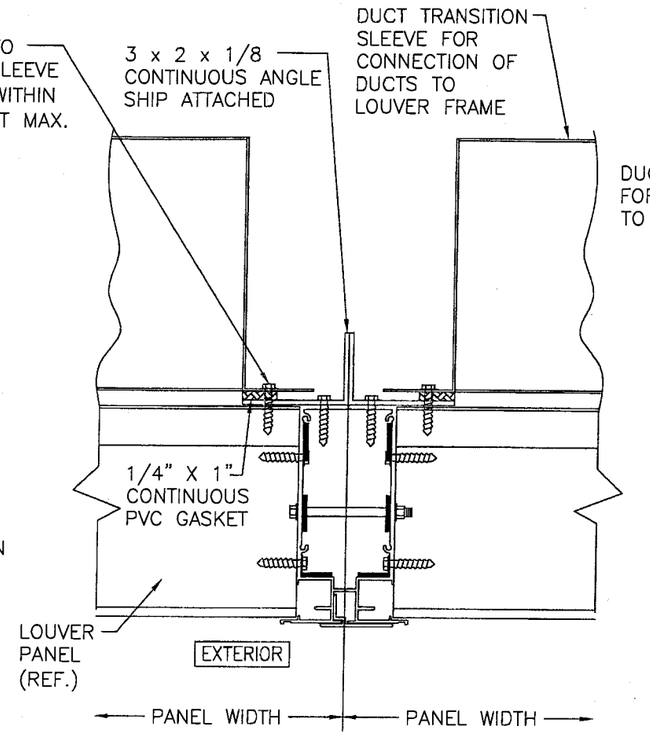

DUCT TRANSITION SLEEVE SECTION AT MULLION

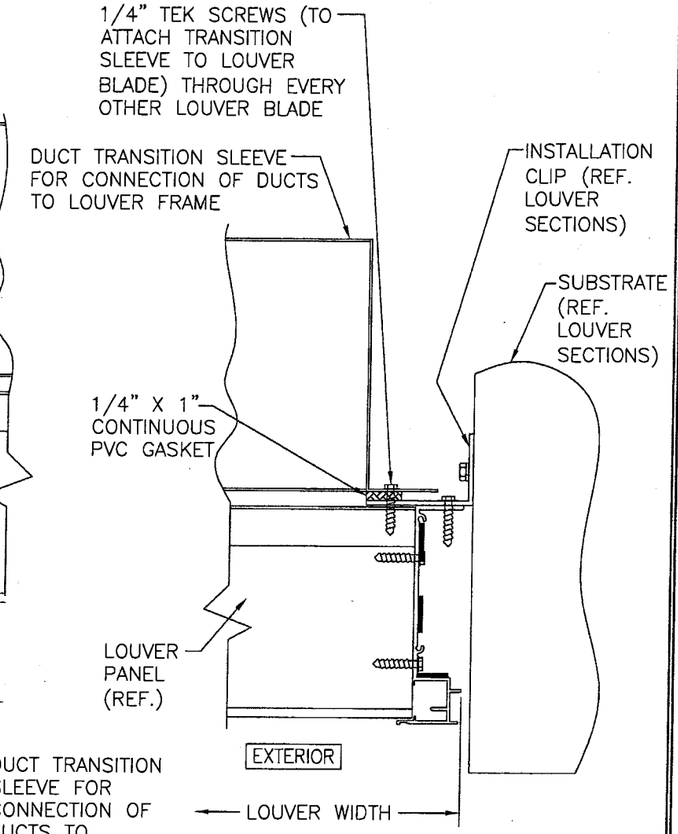

DUCT TRANSTION SLEEVE JAMB DETAIL

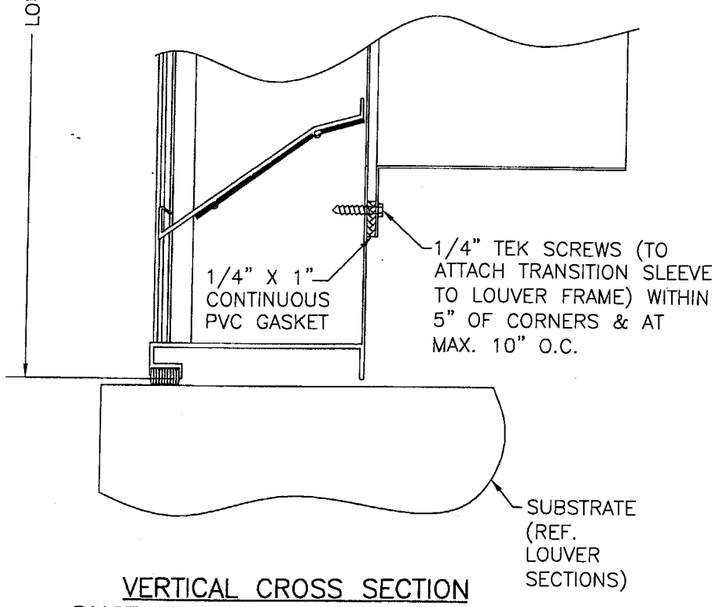

VERTICAL CROSS SECTION
DUCT TRANSITION SLEEVE DETAIL

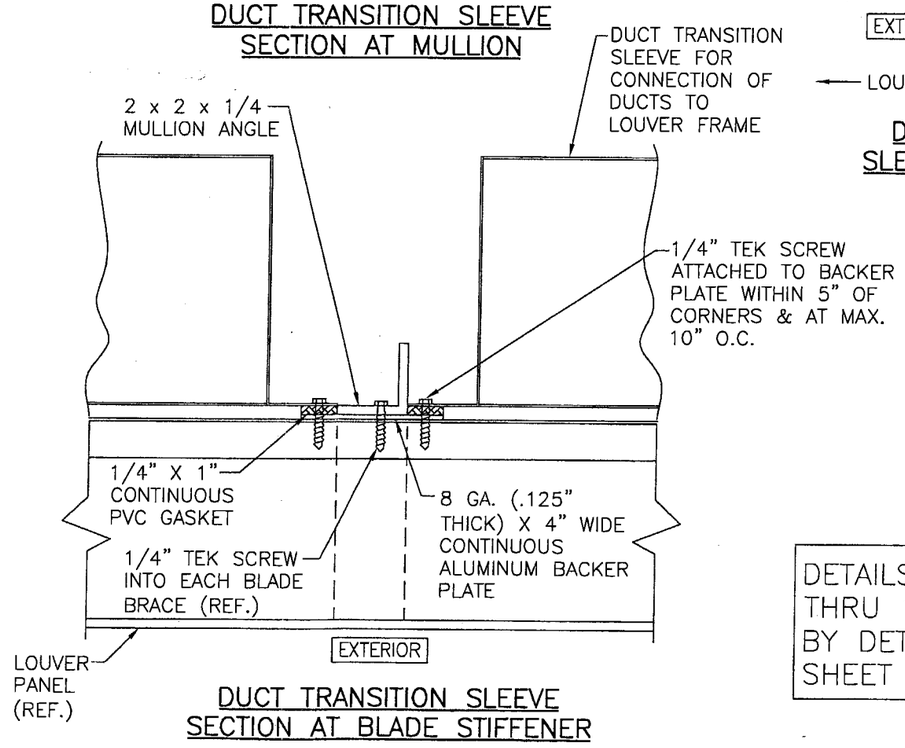

DUCT TRANSITION SLEEVE
SECTION AT BLADE STIFFENER

PRODUCT REVISED
as complying with the Florida Building Code
Approval No. 05-0326.01
Expiration Date 04/22/09
By
Miami Dade Product Control Division

DETAILS ON SHEETS 8 THRU 11 ARE GOVERNED BY DETAILS SHOWN ON SHEET 1 THRU 7.

DRAWN BY: K.P.S.	CHECKED BY: W.W.S.
PLOT: 1=4	DATE: 04/03/03

NO.	REVISION DESCRIPTION	BY	DATE
A4	REDUCED INSTALLATION SCREW SPACING	W.W.S.	08/22/05

DRAWING TITLE
LE-32 LOUVER SYSTEM

MANUFACTURER
AMERICAN WARMING & VENTILATING
7301 INTERNATIONAL DRIVE
HOLLAND, OHIO 43528
419-865-5000

CONSULTANTS
W. W. SCHAEFER ENGINEERING & CONSULTING, P.A.
8895 N. MILITARY TRAIL; SUITE C-204
PALM BEACH GARDENS, FL 33410
PHONE: 561-775-4902 FAX: 561-775-4903

CERTIFICATION
AUG 22 2005
WARREN W. SCHAEFER, P.E.
P.E. NO. 44135

DRAWING NO. 1217
REV. A
SHEET NO. 12 OF 12