MIAMI-DADE

BUILDING CODE COMPLIANCE OFFICE (BCCO)
PRODUCT CONTROL DIVISION

MIAMI-DADE COUNTY, FLORIDA
METRO-DADE FLAGLER BUILDING
140 WEST FLAGLER STREET, SUITE 1603
MIAMI, FLORIDA 33130-1563
(305) 375-2901 FAX (305) 375-2908

NOTICE OF ACCEPTANCE (NOA)

Parex Lahabra, Inc.
P. O. Box 189.
Redan, GA 30074

SCOPE: This NOA is being issued under the applicable rules and regulations governing the use of construction materials. The documentation submitted has been reviewed by Miami-Dade County Product Control Division and accepted by the Board of Rules and Appeals (BORA) to be used in Miami Dade County and other areas where allowed by the Authority Having Jurisdiction (AHJ).

This NOA shall not be valid after the expiration date stated below. The Miami-Dade County Product Control Division (In Miami Dade County) and/or the AHJ (in areas other than Miami Dade County) reserve the right to have this product or material tested for quality assurance purposes. If this product or material fails to perform in the accepted manner, the manufacturer will incur the expense of such testing and the AHJ may immediately revoke, modify, or suspend the use of such product or material within their jurisdiction. BORA reserves the right to revoke this acceptance, if it is determined by Miami Dade County Product Control Division that this product or material fails to meet the requirements of the applicable building code.

This product is approved as described herein, and has been designed to comply with the High Velocity Hurricane Zone of the Florida Building Code.

DESCRIPTION: Parex R/DGG EIFS

APPROVAL DOCUMENT: Drawing No.1366, Sheets 1 through 5 of 5, titled "EIFS Standard System – R/DGG" dated 12/01/04, with no revisions, prepared by W.W. Schaefer Engineering & Consulting PA. signed and sealed by W.W. Schaefer PE., bearing the Miami-Dade County Product Control Approval stamp with the NOA number and approval date by the Miami-Dade County Product Control Division.

MISSILE IMPACT RATING: Large and Small Missile.

LABELING: Each component shall bear a permanent label with the manufacturer's name or logo, city, state and following statement: "Miami-Dade County Product Control Approved or MDCPCA", unless otherwise noted herein.

RENEWAL of this NOA shall be considered after a renewal application has been filed and there has been no change in the applicable building code negatively affecting the performance of this product.

TERMINATION of this NOA will occur after the expiration date or if there has been a revision or change in the materials, use and/or manufacture of the product or process. Misuse of this NOA as an endorsement of any product, for sales, advertising or any other purposes shall automatically terminate this NOA. Failure to comply with any section of this NOA shall be cause for its termination and removal.

ADVERTISEMENT: The NOA number preceded by the words Miami-Dade County, Florida, and followed by the expiration date may be displayed in advertising literature. If any portion of the NOA is displayed, then it shall be done in its entirety.

INSPECTION: A copy of this entire NOA shall be provided to the user by the manufacturer or its distributors and shall be available for inspection at the job site at the request of the Building Official.

This NOA consists of this page, evidence page as well as the approval document mentioned above.

The submitted documentation was reviewed by **Candido F. Font PE.**

09/10/05

PRODUCT CONTROL ACCEPTED

NOA No: 05-0505.01
Expiration Date: September 10, 2010
Approval Date: September 10, 2005

Parex Lahabra, Inc.

NOTICE OF ACCEPTANCE: EVIDENCE SUBMITTED

A. DRAWINGS

1. Drawing No. **1366**, Sheets 1 through 5 of 5, titled "EIFS Standard System – R/DGG" dated 12/01/04, with no revisions, prepared by W. W. Schaefer Engineering & Consulting PA signed and sealed by W. W. Schaefer, PE.

B. TESTS

1. Test report on Uniform Static Air Pressure Test per TAS 202, Large Missile Impact Test per TAS 201 and Cyclic Load Pressure Test Per PA 203, of " EIFS" prepared by Hurricane Test Laboratory, Inc., report No. G153-1005-04 specimen # 1-4, dated 10/25-28/04, signed and sealed by V. J. Abraham, PE.
2. Test report on Uniform Static Load Test per TAS 202, Large Missile Impact Test per TAS 201 and Cyclic Load Pressure per TAS 203 of "EIFS", prepared by Hurricane Test Laboratory, Inc., report No. G153-0301-05 specimen# 1-2, dated 03/1-4/05, signed and sealed by V. J. Abraham, PE.

C. QUALITY ASSURANCE

1. Building Code Compliance Office.

D. MATERIAL CERTIFICATIONS

1. Product Control Notice of Acceptance No. 03-1209.11, issued to Dyplast Products LLC on 06/10/04 and expiring on 01/11/2007.

E. STATEMENTS

1. Code compliance letter prepared by W.W. Schaefer Engineering & Consulting, PA dated 04/20/05 and signed and sealed by W. W. Schaefer PE.
2. No financial interest letter prepared by W. W. Schaefer Engineering & Consulting PA dated 04/20/05 and signed and sealed by W. W. Schaefer PE.
3. Agreement and Plan of Merger between Pare Incorporated and Alhambra Products Inc. dated 12/31/04and signed by J. Chomsky (Parex) and K. Cummins (La Habra).

09/10/05

Candido F. Font PE.
Sr. Product Control Examiner
NOA No: 05-0505.01
Expiration Date: September 10, 2010
Approval Date: September 10, 2005

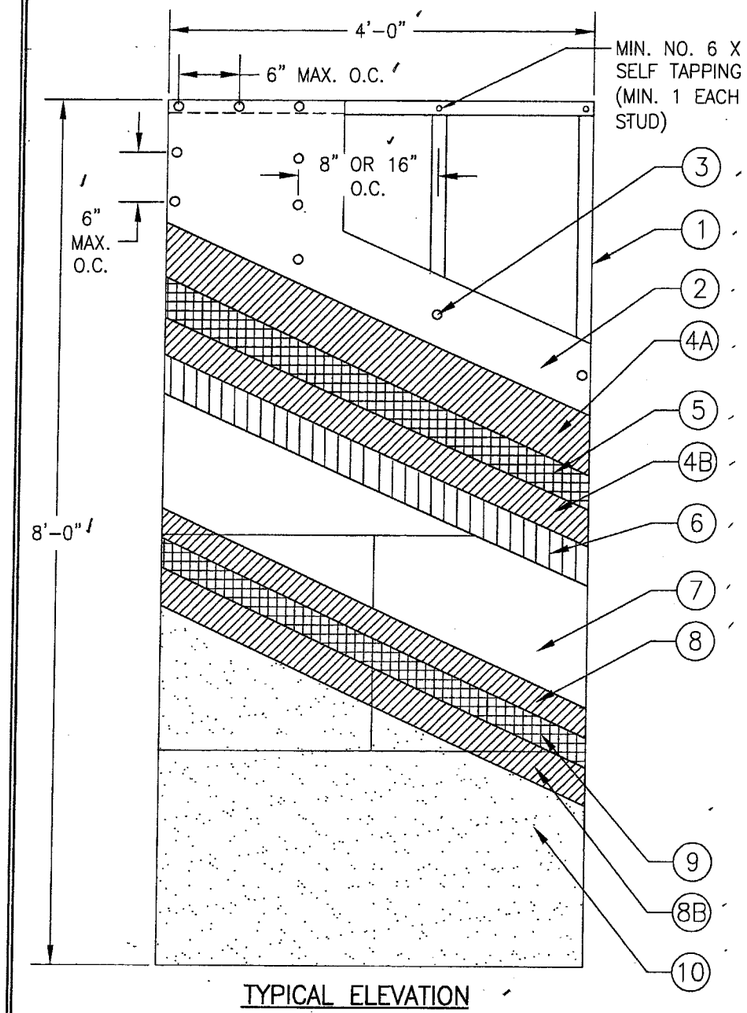

TYPICAL ELEVATION

DIMENSIONS SHOWN ARE TESTED DIMENSIONS

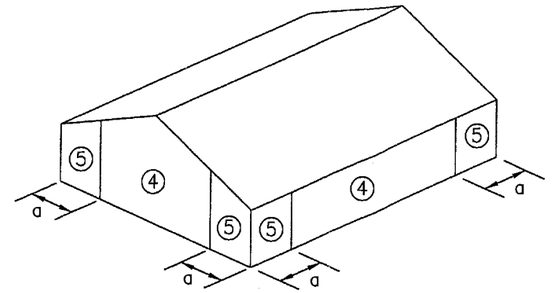

SEE ASCE 7-98 FOR ZONE (4) & (5) REQUIREMENTS

ALLOWABLE DESIGN PRESSURE		
STUD SPACING	POSITIVE	NEGATIVE
16" O.C.	80 PSF	80 PSF
(1) 8" O.C.	130 PSF	130 PSF
LARGE MISSILE IMPACT APPROVED		

(1) EXCLUSIVELY USED FOR ZONE (5) AS SHOWN IN BUILDING PROFILE AND DETERMINED BY ASCE 7-98 WHEN PRESSURE ON ZONE (4) DOES NOT EXCEED 80 PSF AND PRESSURE ON ZONE (5) DOES NOT EXCEED 130 PSF. THIS NOA DOES NOT APPROVE THE USE OF ZONE (4) PRESSURES ABOVE 80 PSF AT ANY TIME.

GENERAL DETAIL NOTES

1. THIS SYSTEM HAS BEEN DESIGNED IN ACCORDANCE WITH THE FLORIDA BUILDING CODE 2004 EDITION AND ITS LATEST REVISIONS FOR USE IN THE HIGH VELOCITY HURRICANE ZONES (HVHZ).
2. THIS SYSTEM HAS BEEN TESTED IN ACCORDANCE WITH FLORIDA PROTOCOLS TAS-201, TAS-202, AND TAS-203 LARGE MISSLE IMPACT, AIR, WATER, STRUCTURAL AND CYCLIC TESTING.
3. THIS SYSTEM SHALL BE APPLIED BY A LICENSED PLASTERING CONTRACTOR, FOLLOWING THIS NOTICE OF ACCEPTANCE, THE RECOMMENDATIONS OF PAREXLAHABRA INC., AND THE APPLICABLE SECTIONS OF THE FLORIDA BUILDING CODE.
4. THE ENGINEER AND/OR ARCHITECT OF RECORD FOR EACH PROJECT USING THIS SYSTEM SHALL SIZE ALL STUD FRAMING & DESIGN THE METHOD OF FASTENING THE FRAMING TO THE STRUCTURE TO ENSURE CONFORMANCE WITH STUD DEFLECTION AND STRESS LIMITATIONS AS REQUIRED BY ALL GOVERNING CODES AND THIS DOCUMENT. STUD DESIGN DEFLECTION SHALL BE LIMITED TO NO GREATER THAN L/240.
5. INSULATION BOARDS SHALL BE POSITIONED IN A RUNNING BOND PATTERN.
6. ALL STUDS USED WITH THIS SYSTEM SHALL BE COMPLETELY SHEATHED AT THE INTERIOR FLANGE OR BRIDGED AT A MAXIMUM EVERY 5' OF STUD LENGTH OR AS SPECIFIED BY THE STUD MANUFACTURER.
7. ALL STEEL STUDS SHALL BE MIN. 18 GA. STRUCTURAL WITH 3 5/8" MIN. DEPTH, 1 5/8" MIN. FLANGE WIDTH AND HAVE A MIN. YEILD STRENGTH OF 33,000 PSI.
8. DETAILS ON SHEETS 2 THROUGH 5 OF 5 ARE TYPICAL AND SHOW INTENT TO PREVENT WATER INFILTRATION INTO AND BEHIND THE SYSTEM. ALTERNATE DETAILS AND SPECIFIC CONDITIONS NOT COVERED BY THE TYPICAL DETAILS ARE THE RESPONSIBILITY OF THE LICENSED DESIGN PROFESSIONAL IN CONSULTATION WITH PAREX, INC.
9. THIS WALL SYSTEM SHALL NOT BE CONSIDERED TO RESIST DIAPRAM ACTION FROM THE BUILDING ONTO WHICH IT IS INSTALLED.

MATERIAL LIST

NUMBER	ITEM	NOTES
1	MIN. 3 5/8" X 1 5/8" X 18 GA. STEEL STUDS (ALL DIMENSIONS ARE MINIMUM REQUIRED)	8" OR 16" O.C. AS REQUIRED FOR THE ALLOWABLE DESIGN PRESSURE (DESIGN OF STUD FRAMING SYSTEM IS NOT PART OF THIS APPROVAL.)
2	SHEATHING	1/2" THICK DENS GLASS GOLD
3	NO. 6 X 1 1/4" WAFER HEAD SCREWS WITH MIN. 7/16" HEAD DIAMETER	MIN. 6" O.C. ALONG ALL STUDS & PERIMETER TRACKS
4	PAREX BASE COAT & ADHESIVE 121	APPLY 1/16" TOTAL THICKNESS TO EXPOSED SURFACE OF SHEATHING WITH MESH EMBEDDED
5	ULTRA HIGH IMPACT 20 OZ/SQ. YARD MESH	358.20 OPEN WEAVE FIBERGLASS REINFORCING FABRIC EMBEDDED IN THE WET BASE COAT. MESH EDGES ARE BUTTED TIGHT.
6	PAREX BASE COAT & ADHESIVE 121 DRY	APPLY WITH NOTCHED TROWEL PARALLEL TO SHORT DIMENSION OF INSULATION BOARD. TROWEL HAS 5/16" X 5/16" U-NOTCHES W/ 3/4" FLAT SEGMENT BETWEEN NOTCHES.
7	PAREX EPS MIN. 1" THICK INSULATION BOARD BY DYPLAST PRODUCTS LLC (NOA #03-1209.11)	NOMINAL DENSITY OF 1 LB. PER CUBIC FT., CONFORMING TO ASTM C578 TYPE I. AFTER COATING WITH 121 ADHESIVE, APPLY W/ PRESSURE TO SHEATHING BOARD. OFFSET EPS AND SHEATHING JOINTS MIN. 6"
8	PAREX BASE COAT & ADHESIVE 121	APPLY 1/16" TOTAL THICKNESS TO EXPOSED SURFACE OF EPS BOARD WITH MESH EMBEDDED (MESH NOT TO BE VISIBLE)
9	PAREX STANDARD 4.5 OZ / SQ. YARD MESH	355 OPEN WEAVE FIBERGLASS REINFORCING FABRIC EMBEDDED IN THE WET BASE COAT. MESH JOINTS ARE OVERLAPPED 2 1/2" MIN.
10	PAREX ACRYLIC BASED TEXTURED FINISH	APPLY AT A NOMINAL THICKNESS OF ITS LARGEST AGGREGATE SIZE AFTER THE BASE COAT IS DRY

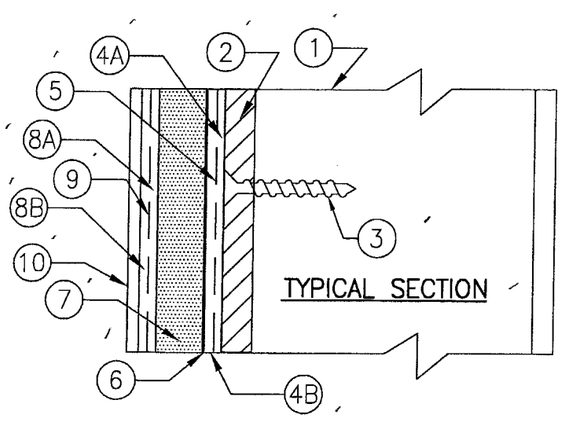

TYPICAL SECTION

Approved as complying with the Florida Building Code
Date 9/10/5
NOA# 05-0505.01
Miami Dade Building Control Division
By

NO.	REVISION DESCRIPTION	BY	DATE

DRAWN BY: S.T.R. | CHECKED BY: W.W.S.
PLOT: 1=16 | DATE: 12/1/04

DRAWING TITLE: EIFS STANDARD SYSTEM - R/DGG

MANUFACTURER: PAREXLAHABRA, INC.
1870 STONE MOUNTAIN/LITHONIA RD
P.O. BOX 189 REDAN, GA 30074
770-482-6878

CONSULTANTS: W. W. SCHAEFER ENGINEERING & CONSULTING, P.A.
8895 N. MILITARY TRAIL, SUITE C-204
PALM BEACH GARDENS, FL 33410
PHONE: 561-775-4902 FAX: 561-775-4903

CERTIFICATION
APR 20 2005
WARREN W. SCHAEFER, P.E.
P.E. NO. 44135

DRAWING NO. 1366 | REV.

SHEET NO. 1 OF 5

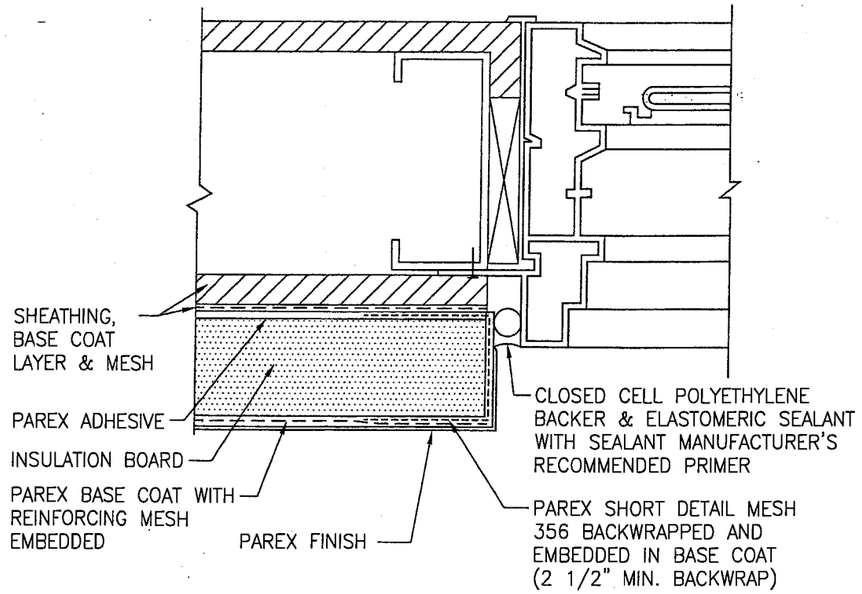

TERMINATION AT FIN MOUNTED WINDOW/DOOR JAMB

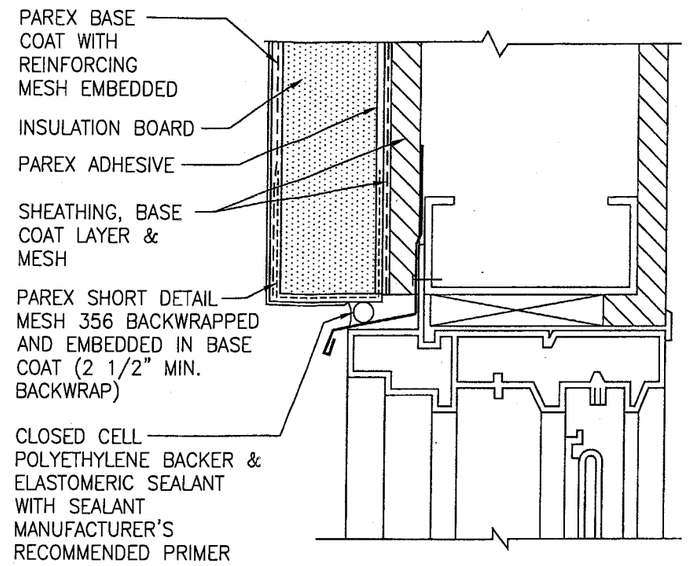

TERMINATION AT FIN MOUNTED WINDOW/DOOR HEAD

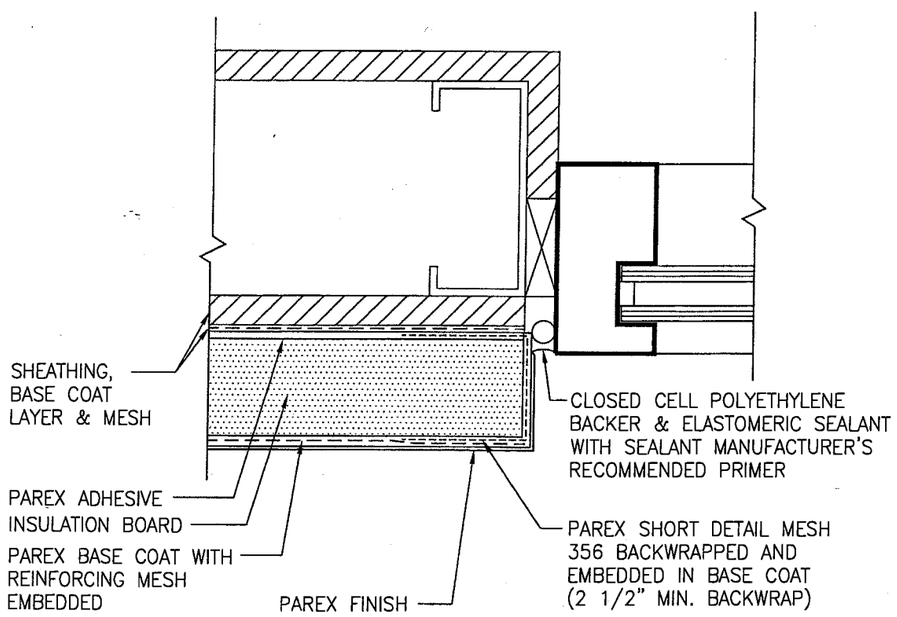

TERMINATION AT DIRECT MOUNTED WINDOW/DOOR JAMB

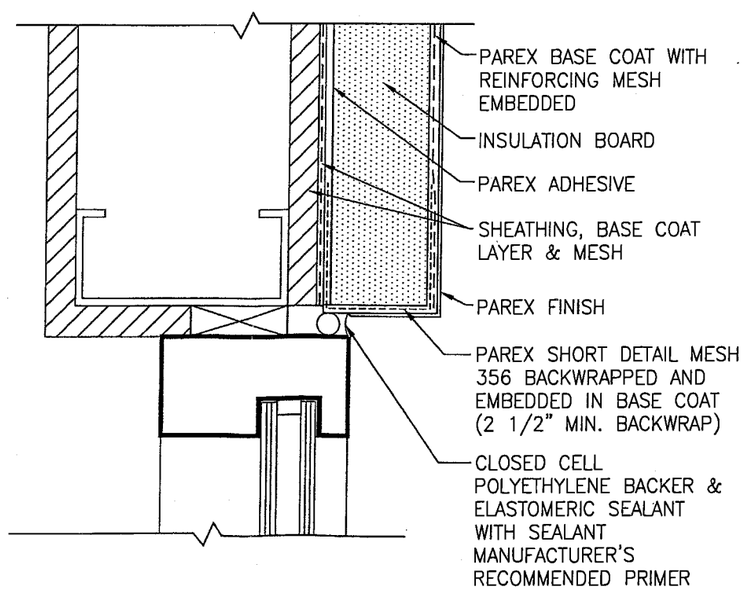

TERMINATION AT DIRECT MOUNTED WINDOW/DOOR HEAD

GENERAL DETAIL NOTES

1. PROVIDE FLASHING AND/OR SEALANT AT ALL TERMINATIONS OF THE PAREX EIF SYSTEM SO AS TO PREVENT WATER INTRUSION BETWEEN THE SYSTEM AND ADJACENT CONSTRUCTION.
2. WINDOWS AND DOORS SHALL CONFORM TO THE F.B.C.
3. FLASHING MATERIALS SHALL CONFORM TO THE F.B.C.
4. PAN FLASHINGS AT SILLS SHALL HAVE UP–TURNED END DAMS WITH WATERTIGHT SEAMS.
5. FLASHING SECTIONS SHALL BE JOINED WITH WATERTIGHT SEAMS.
6. BACKER ROD AND SEALANT JOINTS AT EIF SYSTEM TERMINATIONS SHALL BE CAULKED WITH SEALANT CAPABLE OF 100% ELONGATION AND 50% COMPRESSION OF INSTALLED WIDTH OF NOT LESS THA N 3/4"
7. BACKER ROD AND SEALANT JOINTS AT EXPANSION JOINTS IN THE EIF SYSTEM SHALL BE CAULKED WITH SEALANT CAPABLE OF 100% ELONGATION AND 50% COMPRESSION OF INSTALLED WIDTH OF NOT LESS THAN 3/4"
8. BACKER ROD SHALL BE CLOSED–CELL POLYETHYLENE.
9. APPLY SEALANTS TO DRY EIF SYSTEM BASE COAT.
10. FOLLOW SEALANT MANUFACTURER'S INSTALLATION INSTRUCTIONS.
11. ALL EIF SYSTEM EDGES SHALL BE TERMINATED BY BACK–WRAPPED FIBERGLASS MESH AND BASE COAT OR TO EXTERIOR GRADE RIGID PVC EXTRUSIONS TO PROVIDE A SUBSTRATE FOR SEALANT.
12. BASE COAT APPLICATION ON EIF SYSTEM EDGES SHALL PROVIDE A SMOOTH UNIFORM SURFACE FOR THE APPLICATION OF SEALANT.
13. COUNTER–FLASHING INSTALLED OVER UPPER HORIZONTAL TERMINATIONS OF THE EIF SYSTEM SHALL LAP THE SYSTEM SUFFICIENTLY TO PREVENT UPWARD ENTRY OF WIND–DRIVEN RAIN OR SHALL BE SEALED AT ITS LOWER EDGE.
14. PRIMER APPLIED TO THE BASE COAT SHALL BE DRY AT THE TIME THE SEALANT IS APPLIED.
15. MINIMUM LENGTH OF BACKWRAP MESH ATTACHMENT TO THE SUBSTRATE IS 2 1/2"(38mm).

Approved as complying with the Florida Building Code
Date 9/16/5
NOA# 05-0505.01
Miami Dade Product Control Division
By

DRAWN BY: S.T.R.	CHECKED BY: W.W.S.
PLOT: 1=2	DATE: 12/1/04

NO.	REVISION DESCRIPTION	BY	DATE

DRAWING TITLE: EIFS STANDARD SYSTEM – R/DGG

MANUFACTURER: PAREXLAHABRA, INC.
1870 STONE MOUNTAIN/LITHONIA RD
P.O. BOX 189 REDAN, GA 30074
770–482–6878

CONSULTANTS: W. W. SCHAEFER ENGINEERING & CONSULTING, P.A.
8895 N. MILITARY TRAIL; SUITE C–204
PALM BEACH GARDENS, FL 33410
PHONE: 561–775–4902 FAX: 561–775–4903

CERTIFICATION
APR 20 2005
WARREN W. SCHAEFER, P.E.
P.E. NO. 44135

DRAWING NO. 1366 REV.

SHEET NO. 2 OF 5

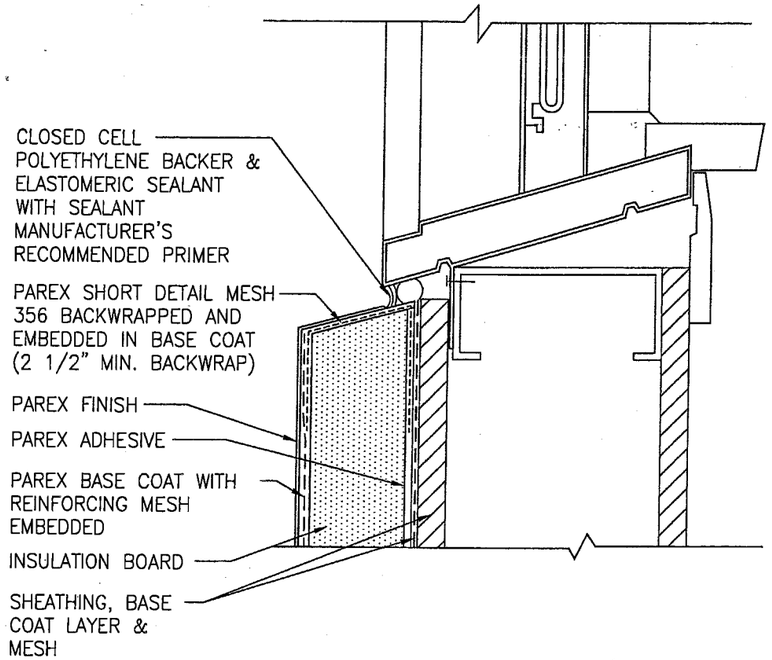

TERMINATION AT FIN MOUNTED WINDOW SILL

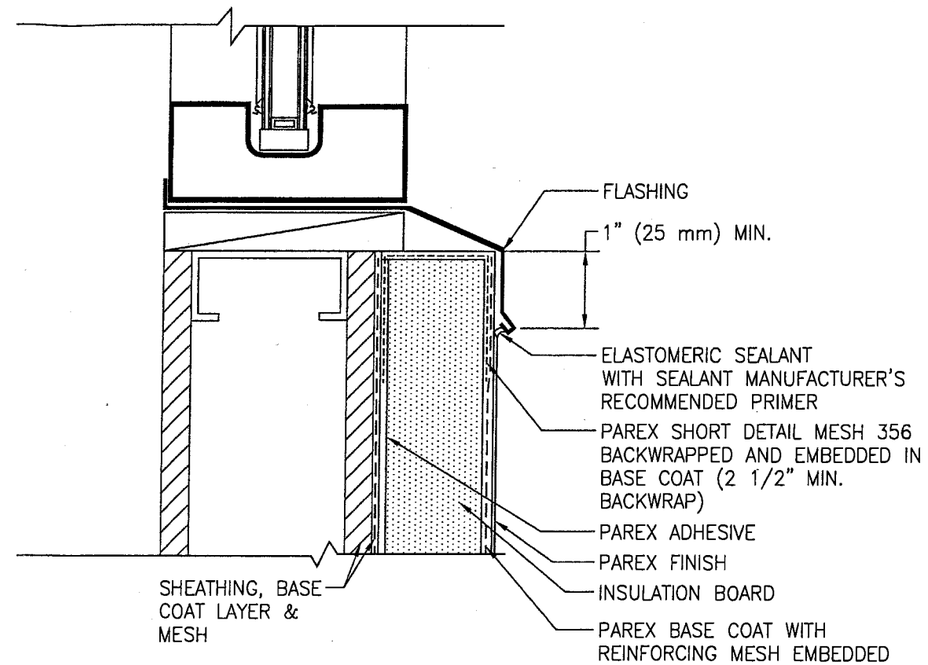

TERMINATION AT DIRECT MOUNTED WINDOW SILL

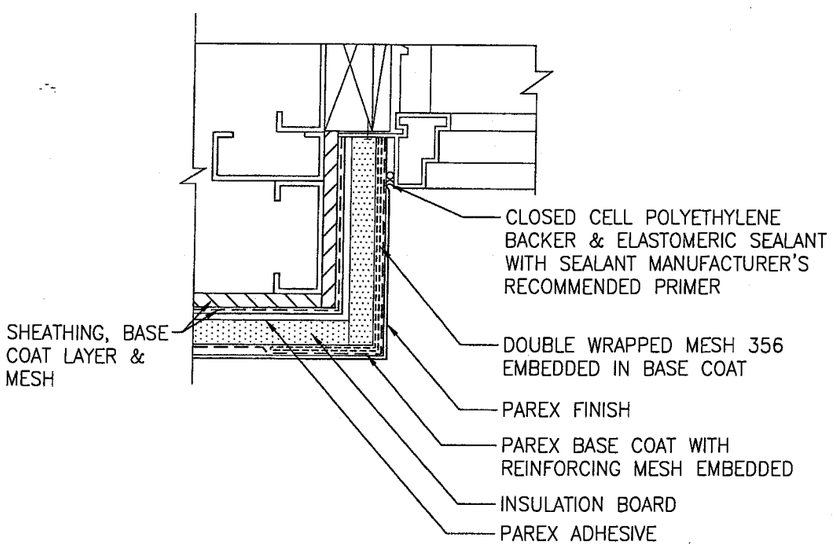

INSULATED WINDOW/DOOR JAMB RETURN

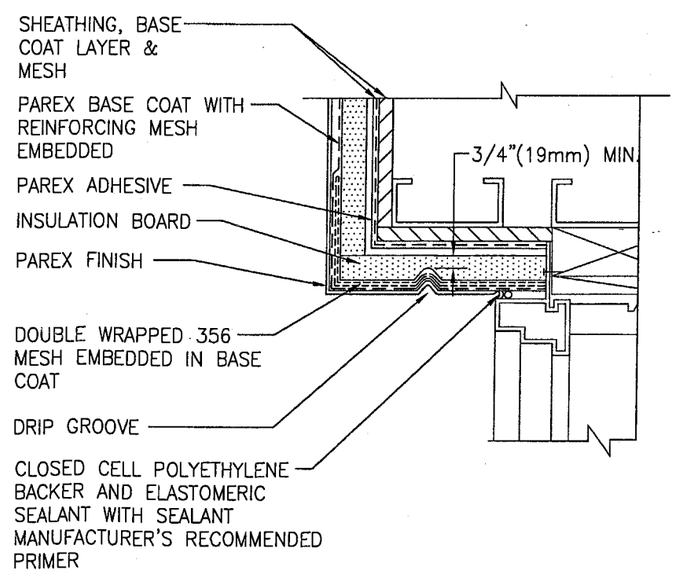

INSULATED WINDOW/DOOR HEAD RETURN

Approved as complying with the Florida Building Code
Date 9/10/5
NOA# 05-0505.01
Miami Dade Product Control Division
By

DRAWN BY: S.T.R.	CHECKED BY: W.W.S.
PLOT: 1=2	DATE: 12/1/04

NO.	REVISION DESCRIPTION	BY	DATE

DRAWING TITLE: EIFS STANDARD SYSTEM – R/DGG

MANUFACTURER
PAREXLAHABRA, INC.
1870 STONE MOUNTAIN/LITHONIA RD
P.O. BOX 189 REDAN, GA 30074
770-482-6878

CONSULTANTS
W. W. SCHAEFER ENGINEERING & CONSULTING, P.A.
8895 N. MILITARY TRAIL; SUITE C-204
PALM BEACH GARDENS, FL 33410
PHONE: 561-775-4902 FAX: 561-775-4903

CERTIFICATION
APR 20 2005
WARREN W. SCHAEFER, P.E.
P.E. NO. 44135

DRAWING NO. 1366 REV.

SHEET NO. 3 OF 5

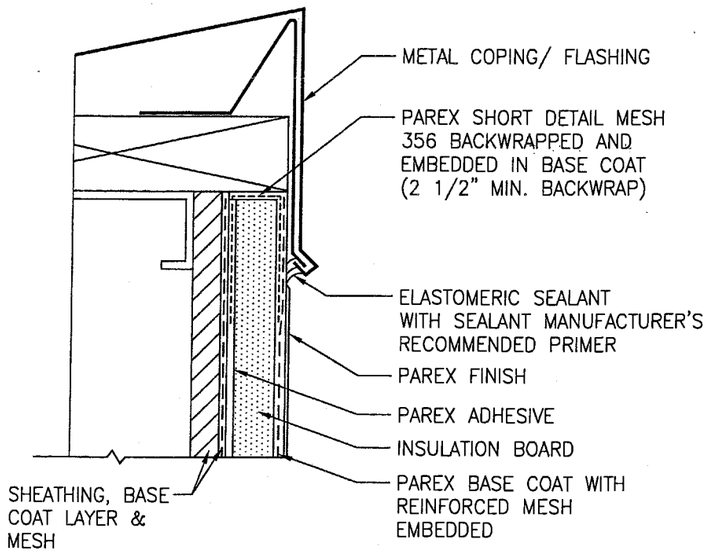

TERMINATION AT PARAPET

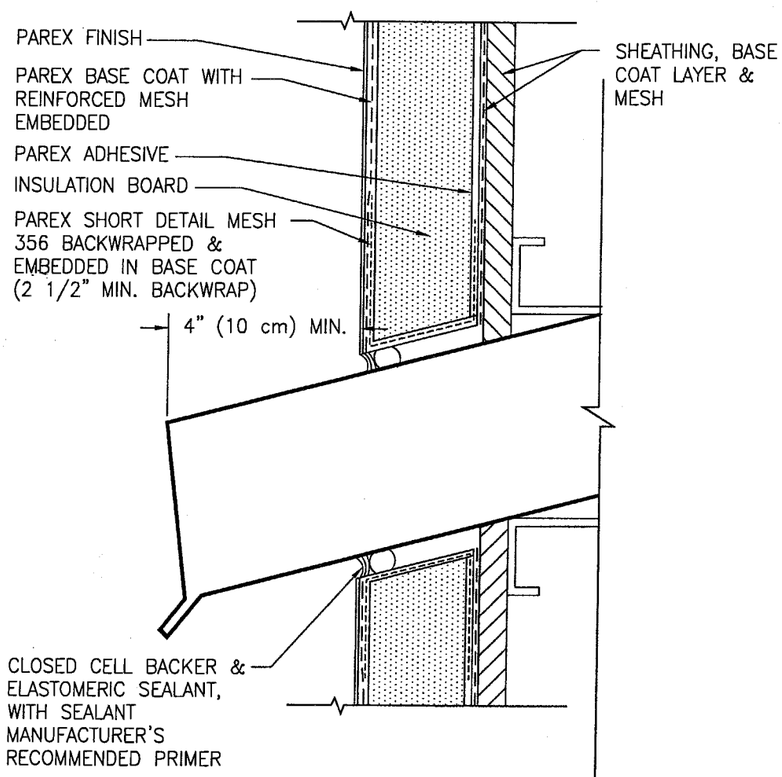

TERMINATION AT SCUPPER

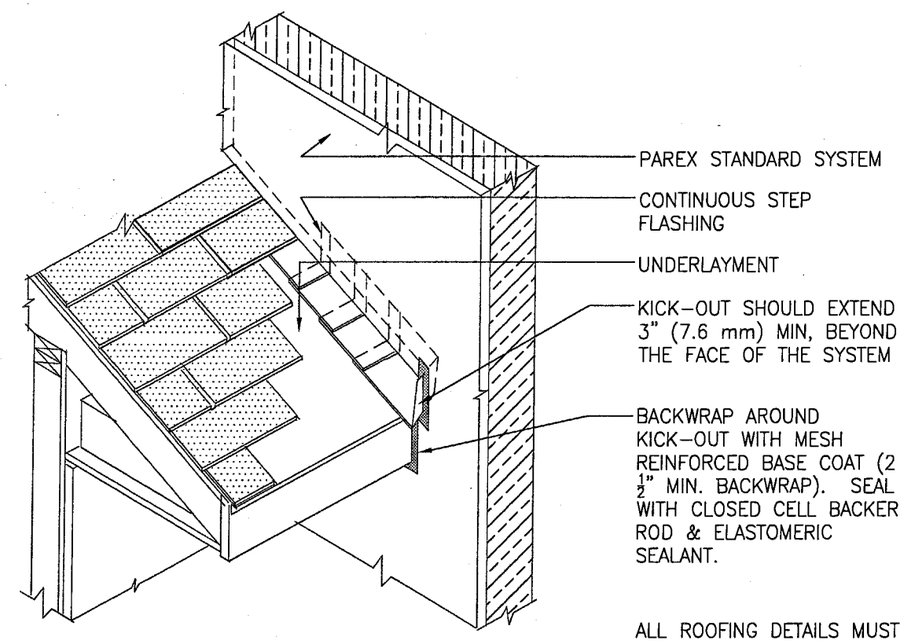

ALL ROOFING DETAILS MUST COMPLY WITH THE FLORIDA BUILDING CODE

INTERSECTION OF ROOF AT WALL

Approved as complying with the Florida Building Code
Date 9/10/05
NOA# 05-0505.01
Miami Dade Product Control Division
By

DRAWN BY: S.T.R.	CHECKED BY: W.W.S.
PLOT: 1=2	DATE: 12/1/04

NO.	REVISION DESCRIPTION	BY	DATE

DRAWING TITLE: EIFS STANDARD SYSTEM – R/DGG

MANUFACTURER: PAREXLAHABRA, INC.
1870 STONE MOUNTAIN/LITHONIA RD
P.O. BOX 189 REDAN, GA 30074
770-482-6878

CONSULTANTS: W. W. SCHAEFER ENGINEERING & CONSULTING, P.A.
8895 N. MILITARY TRAIL SUITE C-204
PALM BEACH GARDENS, FL 33410
PHONE: 561-775-4902 FAX: 561-775-4903

CERTIFICATION
APR 20 2005
WARREN W. SCHAEFER, P.E.
P.E. NO. 44135

DRAWING NO. 1366 REV.

SHEET NO. 4 OF 5

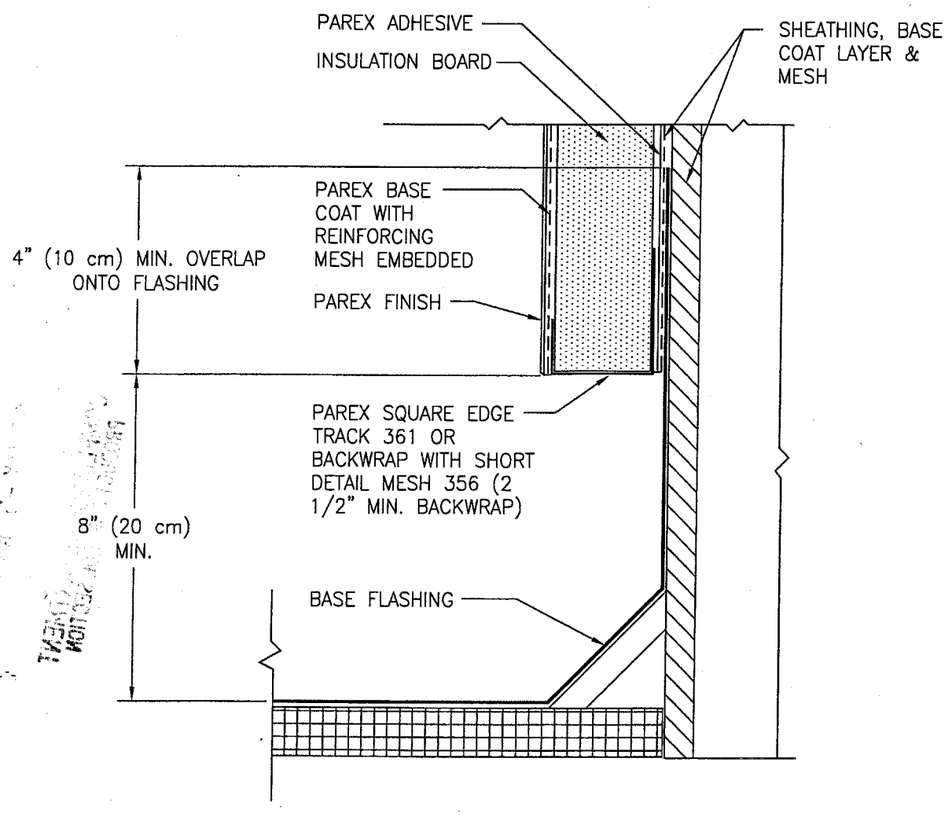

HIGH WALL AT LOW ROOF

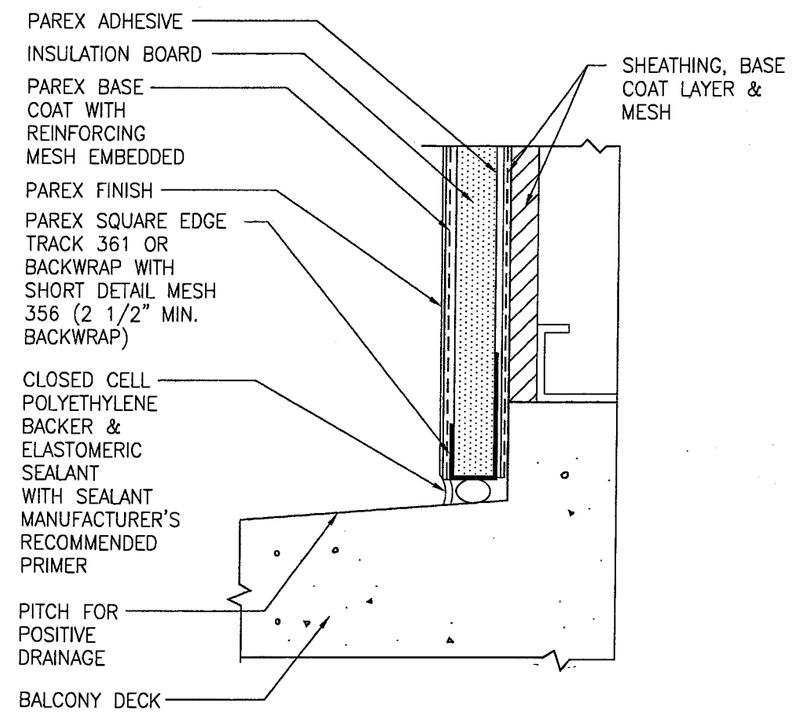

TERMINATION AT BALCONY DECK

Approved as complying with the Florida Building Code
Date 9/10/05
NOA# 05-0505.01
Miami Dade Product Control Division
By

DRAWN BY: S.T.R.	CHECKED BY: W.W.S.
PLOT: 1=2	DATE: 12/1/04

NO.	REVISION DESCRIPTION	BY	DATE

DRAWING TITLE
EIFS STANDARD SYSTEM – R/DGG

MANUFACTURER
PAREXLAHABRA, INC.
1870 STONE MOUNTAIN/LITHONIA RD
P.O. BOX 189 REDAN, GA 30074
770-482-6878

CONSULTANTS
W. W. SCHAEFER ENGINEERING & CONSULTING, P.A.
8895 N. MILITARY TRAIL; SUITE C-204
PALM BEACH GARDENS, FL 33410
PHONE: 561-775-4902 FAX: 561-775-4903

CERTIFICATION
APR 2 0 2005
WARREN W. SCHAEFER, P.E.
P.E. NO. 44135

DRAWING NO. 1366
REV.

SHEET NO. 5 OF 5