MIAMI-DADE COUNTY, FLORIDA

BUILDING CODE COMPLIANCE OFFICE (BCCO)
PRODUCT CONTROL DIVISION

METRO-DADE FLAGLER BUILDING
140 WEST FLAGLER STREET, SUITE 1603
MIAMI, FLORIDA 33130-1563
(305) 375-2901 FAX (305) 375-2908
www.buildingcodeonline.com

NOTICE OF ACCEPTANCE (NOA)

K. D. Windows, Inc.
3705 Shares Place
Riviera Beach, FL 33404

SCOPE:

This NOA is being issued under the applicable rules and regulations governing the use of construction materials. The documentation submitted has been reviewed by Miami-Dade County Product Control Division and accepted by the Board of Rules and Appeals (BORA) to be used in Miami Dade County and other areas where allowed by the Authority Having Jurisdiction (AHJ).

This NOA shall not be valid after the expiration date stated below. The Miami-Dade County Product Control Division (In Miami Dade County) and/or the AHJ (in areas other than Miami Dade County) reserve the right to have this product or material tested for quality assurance purposes. If this product or material fails to perform in the accepted manner, the manufacturer will incur the expense of such testing and the AHJ may immediately revoke, modify, or suspend the use of such product or material within their jurisdiction. BORA reserves the right to revoke this acceptance, if it is determined by Miami-Dade County Product Control Division that this product or material fails to meet the requirements of the applicable building code.

This product is approved as described herein, and has been designed to comply with the Florida Building Code, including the High Velocity Hurricane Zone.

DESCRIPTION: Aluminum Tube Mullion

APPROVAL DOCUMENT: Drawing No. **9607**, titled "Mullion Details", sheets 1 through 9 of 9, dated 01/21/97, revised on 10/12/01, prepared by Saul Perez, Structural Engineer, signed and sealed by Saul Perez, P.E., bearing the Miami-Dade County Product Control Renewal stamp with the Notice of Acceptance number and expiration date by the Miami-Dade County Product Control Division.

MISSILE IMPACT RATING: Large and Small Missile Impact Resistant

LABELING: Each unit shall bear a permanent label with the manufacturer's name or logo, city, state and following statement: "Miami-Dade County Product Control Approved", unless otherwise noted herein.

RENEWAL of this NOA shall be considered after a renewal application has been filed and there has been no change in the applicable building code negatively affecting the performance of this product.

TERMINATION of this NOA will occur after the expiration date or if there has been a revision or change in the materials, use, and/or manufacture of the product or process. Misuse of this NOA as an endorsement of any product, for sales, advertising or any other purposes shall automatically terminate this NOA. Failure to comply with any section of this NOA shall be cause for termination and removal of NOA.

ADVERTISEMENT: The NOA number preceded by the words Miami-Dade County, Florida, and followed by the expiration date may be displayed in advertising literature. If any portion of the NOA is displayed, then it shall be done in its entirety.

INSPECTION: A copy of this entire NOA shall be provided to the user by the manufacturer or its distributors and shall be available for inspection at the job site at the request of the Building Official.

This NOA **renews NOA # 01-0918.04** and consists of this page 1 and evidence page E-1, as well as approval document mentioned above.

The submitted documentation was reviewed by **Manuel Perez, P.E.**

PRODUCT CONTROL ACCEPTED

K. D. Windows, Inc.

NOTICE OF ACCEPTANCE: EVIDENCE SUBMITTED

A. DRAWINGS

1. Manufacturer's die drawings and sections.
2. Drawing No **9607**, Sheets 1 through 9 of 9, titled "Mullion Details", dated 01/21/97 with revision dated 10/12/01, prepared by Saul Perez, Structural Engineer, signed and sealed by Saul Perez, P.E. ***(Submitted under original NOA #95-0913.04)***

B. TESTS

1. Test reports on 1) Air Infiltration Test, per SFBC, PA 202-94
   2) Uniform Static Air Pressure Test, Loading per SFBC PA 202-94
   3) Water Resistance Test, per SFBC, PA 202-94
   along with marked-up drawings and installation diagram of two mulled single hung windows with a 1" x 2" aluminum tube mullion, prepared by Hurricane Engineering & Testing Inc., Test Report No. **HETI-96-526**, dated Feb. 14, 1996, signed and sealed by Hector M. Medina, P.E. ***(Submitted under original NOA #95-0913.04)***
2. Test reports on 1) Large Missile Impact Test per SFBC, PA 201-94
   along with marked-up drawings and installation diagram of a 1" x 2" aluminum tube mullion, prepared by Hurricane Engineering & Testing Inc., Test Report No. **HETI-96-559**, dated May 30, 1996, signed and sealed by Hector M. Medina, P.E.
   (Submitted under original NOA #95-0913.04)

C. CALCULATIONS

1. Anchor Calculations and structural analysis, prepared by Saul Perez Jr., P.E. Consulting Engineer, dated September 26, 1996, signed and sealed by Saul Perez, P.E.
   (Submitted under original NOA #95-0913.04)

D. QUALITY ASSURANCE

1. Miami Dade Building Code Compliance Office (BCCO).

E. MATERIAL CERTIFICATIONS

1. None.

F. STATEMENTS

1. Letter from manufacturer requesting renewal, dated 5/4/05, signed by Mr. Vince Conway.

G. OTHER

1. Notice of Acceptance No. **01-0918.04**, issued to K.D. Windows, Inc. for their Aluminum Tube Mullion, approved on 02/07/02 and expiring on 05/01/05.

Manuel Perez, P.E.
Product Control Examiner
NOA No. 05-0512.01
Expiration Date: May 01, 2006
Approval Date: June 02, 2005

GENERAL NOTES:

1. ARCHITECT OR ENGINEER OF RECORD SHALL CALCULATE DESIGN WIND LOADS IN ACCORDANCE WITH ASCE-7-88.
2. MUST SELECT DADE COUNTY APPROVED PRODUCT WHICH COMPLIES WITH THE DESIGN CRITERIA, AS NOTED ABOVE.
3. MUST SELECT FROM MULLION CHARTS AND ANCHOR LOAD TABLES ANGHOR TYPES WHICH MEET OR EXCEED ALL OF THE DESIGN LOADING CONDITIONS.
4. ALL ALUMINUM MULLIONS SHALL CONSIST OF 6063-T5 ALUMINUM ALLOY UNLESS OTHERWISE NOTED.
5. ALL GLAZING PRODUCTS SHALL HAVE METRO DADE PRODUCT CONTROL APPROVAL.
6. ANY ASSEMBLY CONDITION NOT DESCRIBED HEREIN SHALL REQUIRE SEPARATE ENGINEERING
7. ALL ALUMINUM INSERT ANGLES SHALL BE CUT TO FIT SNUGLY INTO THE ALUMINUN MULLIONS
8. ALL TAPCON ANCHORS SHALL DEVELOP A MINIMUM DESIGN SHEAR RESISTANCE OF 255 LBS. AND A MINIMUM DESIGN TENSION (PULL OUT) RESISTANCE OF 214 LBS

MULLION STRUCTURAL PROPERITIES WITHOUT WINDOW FRAMES

MULLION SIZE	I_x	S_x
1"X2"	.332 IN^4	.332 IN^3
1"X3"	.950 IN^4	.633 IN^3
1"X4"	2.037 IN^4	1.019 IN^3
2"X4"	2.976 IN^4	1.488 IN^3
2"X6"	8.276 IN^4	2.759 IN^3

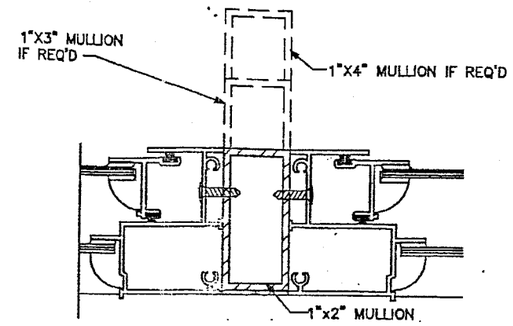

SECTION "A-A" TYPICAL FOR 1"X2", 1"X3" & 1"X4" MULLIONS

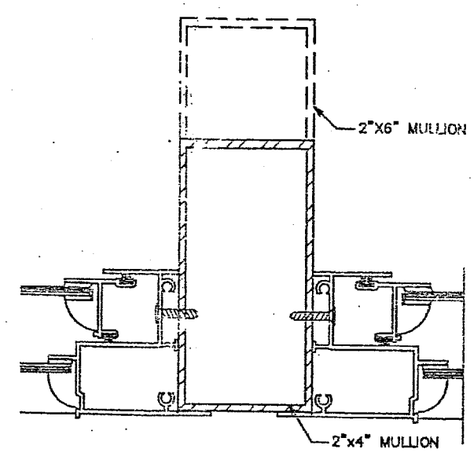

SECTION "A-A" TYPICAL FOR 2"X4" & 2"X6" MULLIONS

PRODUCT RENEWED
ACCEPTANCE No. 01-0918.04
EXPIRATION DATE May 1, 2005
By
PRODUCT CONTROL DIVISION
BUILDING CODE COMPLIANCE OFFICE

PRODUCT RENEWED
as complying with the Florida Building Code
Acceptance No 05-0512.01
Expiration Date MAY 1, 2006
By
Miami Dade Product Control Division

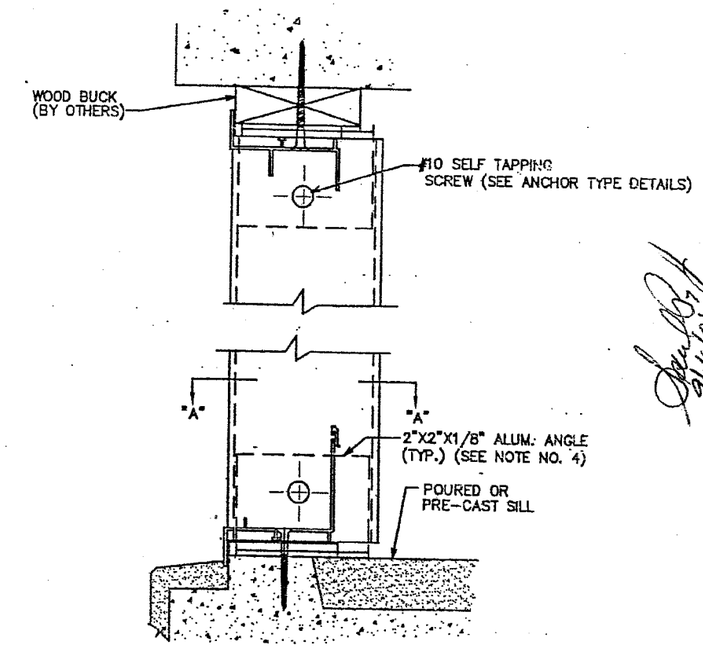

TYPICAL MULLION SECTION

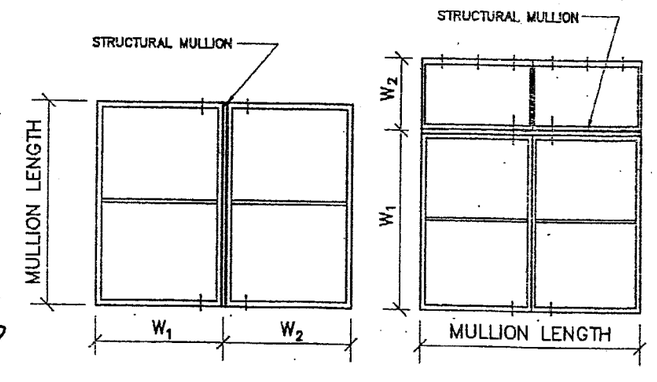

VERT. MULLIONS

HORIZ. MULLIONS

$$\text{TRIBUTARY WIDTH} = \frac{W_1 + W_2}{2}$$

TYPICAL MULLION ELEVATION

Florida P.E. No. 37337
SAUL PEREZ
STRUCTURAL ENGINEER
16461 NW 82nd Place,
MIAMI, FL. 33016 (305) 558-0582

REVISIONS
3/13/97
10/12/01

MULLION DETAILS
KD WINDOWS
3705 Shares Pl. ~ Riviera Beach, Fl. 33404

DATE 1/2/97
SCALE FULL
DRAWN MOB
PROJECT 9607
DRAWING NUMBER 1

Design Load Pressure (psf) 1"x2"x1/8" thick Aluminum Mullion					
Tributary Width (in.)	Mullion Length (in.)				
	38.375	50.625	58	63	74.25
20	164.30	78.54	52.23	40.75	24.89
23	142.87	68.29	45.41	35.44	21.65
26	126.38	60.41	40.17	31.35	19.15
29	113.31	54.16	36.02	28.11	17.17
32	102.69	49.09	32.64	25.47	15.56
35	93.88	44.88	29.84	23.29	14.22
38	86.47	41.34	27.49	21.45	13.10
41	80.15	38.31	25.48	19.88	12.14
44	74.68	35.70	23.74	18.52	11.32
47	69.91	33.42	22.22	17.34	10.59
50	65.72	31.42	20.89	16.30	9.96
53	62.00	29.64	19.71	15.38	9.39
56	58.68	28.05	18.65	14.55	8.89
59	55.69	26.62	17.70	13.81	8.44
62	53.00	25.33	16.85	13.15	8.03
65	50.55	24.17	16.07	12.54	7.66
68	48.32	23.10	15.36	11.99	7.32
71	46.28	22.12	14.71	11.48	7.01
74	44.40	21.23	14.12	11.01	6.73
77	42.67	20.40	13.57	10.59	6.47
80	41.07	19.63	13.06	10.19	6.22
83	39.59	18.92	12.58	9.82	6.00
86	38.21	18.26	12.15	9.48	5.79
89	36.92	17.65	11.74	9.16	5.59
92	35.72	17.07	11.35	8.86	5.41
95	34.59	16.53	11.00	8.58	5.24
98	33.53	16.03	10.66	8.32	5.08
101	32.53	15.55	10.34	8.07	4.93
104	31.60	15.10	10.04	7.84	4.79

Design Load Pressure (psf) 1"x3"x1/8" thick Aluminum Mullion					
Tributary Width (in.)	Mullion Length (in.)				
	38.375	50.625	58	63	74.25
20	300.00	180.29	137.35	116.42	71.31
23	272.84	156.77	119.44	101.23	62.01
26	241.36	138.68	105.66	89.55	54.85
29	216.39	124.34	94.73	80.29	49.18
32	196.10	112.68	85.85	72.76	44.57
35	179.29	103.02	78.49	66.52	40.75
38	165.14	94.89	72.29	61.27	37.53
41	153.05	87.95	67.00	56.79	34.78
44	142.62	81.95	62.43	52.92	32.41
47	133.52	76.72	58.45	49.54	30.34
50	125.51	72.12	54.94	46.57	28.52
53	118.40	68.03	51.83	43.93	26.91
56	112.06	64.39	49.06	41.58	25.47
59	106.36	61.11	46.56	39.46	24.17
62	101.21	58.16	44.31	37.55	23.00
65	96.54	55.47	42.26	35.82	21.94
68	92.28	53.03	40.40	34.24	20.97
71	88.38	50.79	38.69	32.79	20.09
74	84.80	48.73	37.12	31.46	19.27
77	81.50	46.83	35.68	30.24	18.52
80	78.44	45.07	34.34	29.10	17.83
83	75.61	43.44	33.10	28.05	17.18
86	72.97	41.93	31.94	27.07	16.58
89	70.51	40.51	30.87	26.16	16.02
92	68.21	39.19	29.86	25.31	15.50
95	66.06	37.96	28.92	24.51	15.01
98	64.03	36.79	28.03	23.76	14.55
101	62.13	35.70	27.20	23.05	14.12
104	60.34	34.67	26.41	22.39	13.71

Design Load Pressure (psf) 1"x4"x1/8" thick Aluminum Mullion					
Tributary Width (in.)	Mullion Length (in.)				
	38.375	50.625	58	63	74.25
20	300.00	289.93	220.89	187.22	134.78
23	300.00	252.12	192.08	162.80	117.20
26	300.00	223.03	169.91	144.01	103.68
29	300.00	199.95	152.34	129.12	92.95
32	300.00	181.21	138.06	117.01	84.24
35	288.33	165.68	126.22	106.98	77.02
38	265.57	152.60	116.26	98.54	70.94
41	246.14	141.43	107.75	91.33	65.75
44	229.36	131.79	100.40	85.10	61.27
47	214.72	123.38	94.00	79.67	57.35
50	201.83	115.97	88.36	74.89	53.91
53	190.41	109.41	83.35	70.65	50.86
56	180.21	103.55	78.89	66.86	48.14
59	171.05	98.28	74.88	63.46	45.69
62	162.77	93.53	71.25	60.39	43.48
65	155.26	89.21	67.97	57.61	41.47
68	148.41	85.27	64.97	55.06	39.64
71	142.14	81.67	62.22	52.74	37.97
74	136.37	78.36	59.70	50.60	36.43
77	131.06	75.31	57.37	48.63	35.01
80	126.15	72.48	55.22	46.80	33.70
83	121.59	69.86	53.23	45.11	32.48
86	117.35	67.43	51.37	43.54	31.35
89	113.39	65.15	49.64	42.07	30.29
92	109.69	63.03	48.02	40.70	29.30
95	106.23	61.04	46.50	39.41	28.38
98	102.98	59.17	45.08	38.21	27.51
101	99.92	57.41	43.74	37.07	26.69
104	97.04	55.76	42.48	36.00	25.92

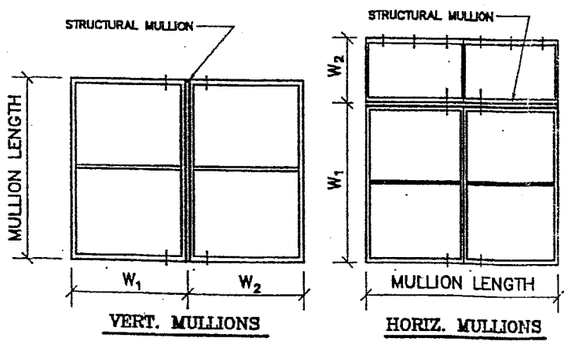

TRIBUTARY WIDTH = $\frac{W_1 + W_2}{2}$

TYPICAL MULLION ELEVATION

PRODUCT RENEWED
as complying with the Florida
Building Code
Acceptance No. 05-0512.01
Expiration Date MAY 1, 2006
By
Miami Dade Product Control
Division

PRODUCT RENEWED

ACCEPTANCE No. 01-0918.04

EXPIRATION DATE May 1, 2005

By

PRODUCT CONTROL DIVISION
BUILDING CODE COMPLIANCE OFFICE

9/16/01

Florida P.E. No. 37337
SAUL PEREZ
STRUCTURAL ENGINEER
16451 NW 52nd Place,
MIAMI, FL. 33016 (305) 625-0088

REVISIONS
3/13/97
10/12/01

MULLION DETAILS

KD WINDOWS
3705 Shores Pl. - Riviera Beach, Fl 33404

DATE 1/2/97
SCALE FULL
DRAWN MCB
PROJECT
9607
DRAWING NUMBER
2

Design Load Pressure (psf) 2"x6"x1/8" thick Aluminum Mullion									
Tributary Width (in.)	Mullion Length (in.)								
	38.375	50.625	58	63	74.25	96	108	120	146
20	300.00	300.00	300.00	300.00	300.00	218.33	172.51	139.73	81.69
23	300.00	300.00	300.00	300.00	300.00	189.85	150.01	121.51	71.03
26	300.00	300.00	300.00	300.00	280.75	167.95	132.70	107.49	62.84
29	300.00	300.00	300.00	300.00	251.71	150.57	118.97	96.37	56.34
32	300.00	300.00	300.00	300.00	228.11	136.46	107.82	87.33	51.06
35	300.00	300.00	300.00	289.70	208.56	124.76	98.58	79.85	46.68
38	300.00	300.00	300.00	266.82	192.09	114.91	90.79	73.54	42.99
41	300.00	300.00	291.78	247.30	178.04	106.50	84.15	68.16	39.85
44	300.00	300.00	271.88	230.44	165.90	99.24	78.41	63.51	37.13
47	300.00	300.00	254.53	215.73	155.31	92.91	73.41	59.46	34.76
50	300.00	300.00	239.26	202.79	145.99	87.33	69.00	55.89	32.68
53	300.00	296.27	225.71	191.31	137.73	82.39	65.10	52.73	30.83
56	300.00	280.40	213.62	181.06	130.35	77.98	61.61	49.90	29.17
59	300.00	266.14	202.76	171.85	123.72	74.01	58.48	47.37	27.69
62	300.00	253.26	192.95	163.54	117.74	70.43	55.65	45.08	26.35
65	300.00	241.57	184.04	155.99	112.30	67.18	53.08	42.99	25.14
68	300.00	230.91	175.92	149.11	107.35	64.22	50.74	41.10	24.03
71	300.00	221.16	168.49	142.81	102.81	61.50	48.59	39.36	23.01
74	300.00	212.19	161.66	137.02	98.64	59.01	46.62	37.77	22.08
77	300.00	203.92	155.36	131.68	94.80	56.71	44.81	36.29	21.22
80	300.00	196.28	149.54	126.74	91.24	54.58	43.13	34.93	20.42
83	300.00	189.18	144.13	122.16	87.95	52.61	41.57	33.67	19.68
86	300.00	182.58	139.10	117.90	84.88	50.77	40.12	32.50	19.00
89	300.00	176.43	134.41	113.93	82.02	49.06	38.77	31.40	18.36
92	297.03	170.68	130.03	110.21	79.34	47.46	37.50	30.38	17.76
95	287.65	165.29	125.92	106.73	76.84	45.96	36.32	29.42	17.20
98	278.85	160.23	122.07	103.46	74.49	44.56	35.21	28.52	16.67
101	270.57	155.47	118.44	100.39	72.27	43.23	34.16	27.67	16.18
104	262.76	150.98	115.03	97.49	70.19	41.99	33.17	26.87	15.71

Design Load Pressure (psf) 2"x4"x1/8" thick Aluminum Mullion									
Tributary Width (in.)	Mullion Length (in.)								
	38.375	50.625	58	63	74.25	96	108	120	146
20	300.00	300.00	300.00	273.48	196.89	103.34	72.58	52.91	29.38
23	300.00	300.00	280.58	237.81	171.21	89.86	63.11	46.01	25.55
26	300.00	300.00	248.21	210.37	151.45	79.49	55.83	40.70	22.60
29	300.00	292.09	222.53	188.61	135.79	71.27	50.06	36.49	20.26
32	300.00	264.71	201.67	170.93	123.06	64.59	45.36	33.07	18.36
35	300.00	242.02	184.38	156.28	112.51	59.05	41.47	30.23	16.79
38	300.00	222.91	169.83	143.94	103.63	54.39	38.20	27.85	15.46
41	300.00	206.60	157.40	133.41	96.04	50.41	35.40	25.81	14.33
44	300.00	192.51	146.67	124.31	89.49	46.97	32.99	24.05	13.35
47	300.00	180.23	137.31	116.38	83.78	43.98	30.89	22.52	12.50
50	294.83	169.41	129.07	109.39	78.76	41.34	29.03	21.16	11.75
53	278.14	159.82	121.76	103.20	74.30	39.00	27.39	19.97	11.09
56	263.24	151.26	115.24	97.67	70.32	36.91	25.92	18.90	10.49
59	249.86	143.57	109.38	92.71	66.74	35.03	24.60	17.94	9.96
62	237.77	136.62	104.09	88.22	63.51	33.34	23.41	17.07	9.48
65	226.80	130.32	99.28	84.15	60.58	31.80	22.33	16.28	9.04
68	216.79	124.57	94.90	80.44	57.91	30.39	21.35	15.56	8.64
71	207.63	119.30	90.89	77.04	55.46	29.11	20.45	14.90	8.28
74	199.21	114.47	87.21	73.91	53.21	27.93	19.62	14.30	7.94
77	191.45	110.01	83.81	71.03	51.14	26.84	18.85	13.74	7.63
80	184.27	105.88	80.67	68.37	49.22	25.84	18.15	13.23	7.34
83	177.61	102.06	77.75	65.90	47.44	24.90	17.49	12.75	7.08
86	171.41	98.50	75.04	63.60	45.79	24.03	16.88	12.30	6.83
89	165.64	95.18	72.51	61.46	44.24	23.22	16.31	11.89	6.60
92	160.24	92.07	70.15	59.45	42.80	22.47	15.78	11.50	6.39
95	155.18	89.16	67.93	57.58	41.45	21.76	15.28	11.14	6.18
98	150.43	86.43	65.85	55.81	40.18	21.09	14.81	10.80	6.00
101	145.96	83.87	63.89	54.16	38.99	20.46	14.37	10.48	5.82
104	141.75	81.45	62.05	52.59	37.86	19.87	13.96	10.18	5.65

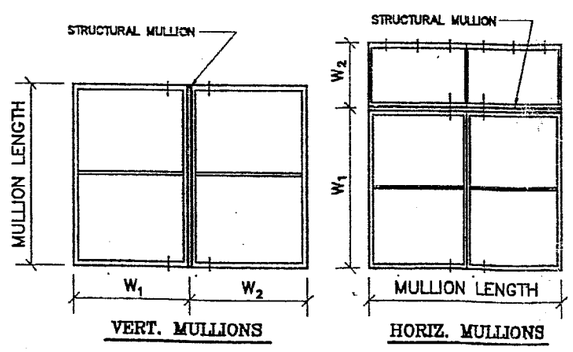

TYPICAL MULLION ELEVATION

$$\text{TRIBUTARY WIDTH} = \frac{W_1 + W_2}{2}$$

PRODUCT RENEWED
as complying with the Florida
Building Code
Acceptance No. 05-0512.01
Expiration Date MAY 1, 2006
By
Miami-Dade Product Control
Division

PRODUCT RENEWED

ACCEPTANCE No. 01-0918.04

EXPIRATION DATE May 1, 2005

By

PRODUCT CONTROL DIVISION
BUILDING CODE COMPLIANCE OFFICE

9/16/01

Florida P.E. No. 37337

SAUL PEREZ
STRUCTURAL ENGINEER
18451 NW 82nd Place,
MIAMI, FL. 33015 (305) 555-0528

REVISIONS
3/13/97
10/12/01

MULLION DETAILS

KD WINDOWS
3705 Shares Pl. ~ Riviera Beach, Fl. 33404

DATE 1/22/97
SCALE FULL
DRAWN MCB
PROJECT 9607
DRAWING NUMBER 3

TYPE "A" ANCHOR

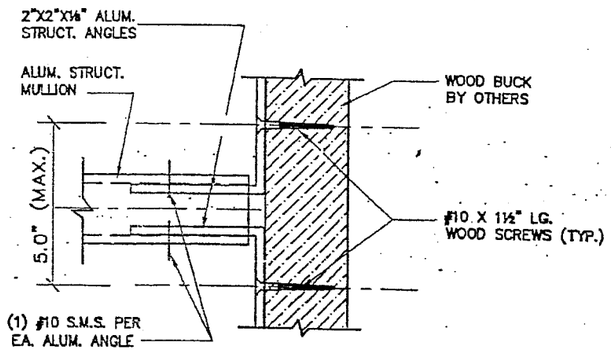

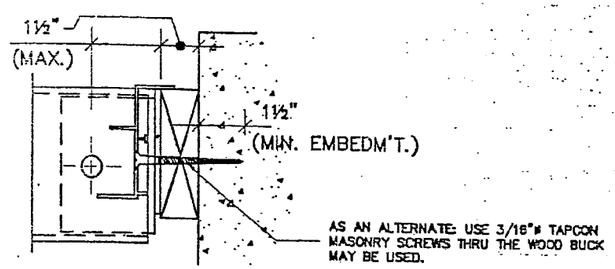

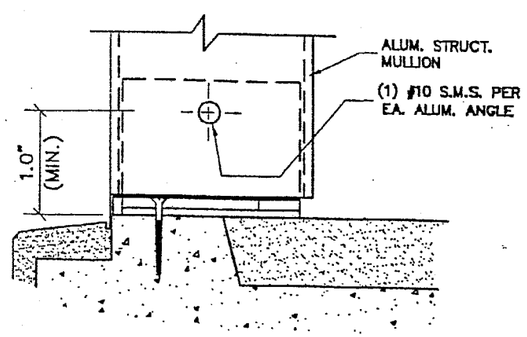

Anchor Design Load Pressure (psf)
Type A : 2 - 3/16" Wood Screws per End in wood buck
(2-3/16" Tap-Con Screws per end thru wood buck)

Tributary Width (in.)	Mullion Length (in.)								
	38.375	50.625	58	63	74.25	96	108	120	146
20	134.45	101.92	88.96	81.90	69.49	53.75	47.77	43.00	35.34
23	116.92	88.62	77.36	71.22	60.43	46.74	41.54	37.39	30.73
26	103.42	78.40	68.43	63.00	53.45	41.34	36.75	33.07	27.18
29	92.73	70.29	61.35	56.48	47.92	37.07	32.95	29.65	24.37
32	84.03	63.70	55.60	51.19	43.43	33.59	29.86	26.87	22.09
35	76.83	58.24	50.83	46.80	39.71	30.71	27.30	24.57	20.19
38	70.76	53.64	46.82	43.10	36.57	28.29	25.14	22.63	18.60
41	65.59	49.72	43.39	39.95	33.90	26.22	23.30	20.97	17.24
44	61.11	46.33	40.44	37.23	31.59	24.43	21.72	19.54	16.06
47	57.21	43.37	37.85	34.85	29.57	22.87	20.33	18.30	15.04
50	53.76	40.77	35.58	32.76	27.80	21.50	19.11	17.20	14.14
53	50.74	38.46	33.57	30.91	26.22	20.28	18.03	16.23	13.34
56	48.02	36.40	31.77	29.25	24.82	19.19	17.06	15.36	12.62
59	45.58	34.55	30.16	27.76	23.56	18.22	16.19	14.58	11.98
62	43.37	32.88	28.70	26.42	22.42	17.34	15.41	13.87	11.40
65	41.37	31.36	27.37	25.20	21.38	16.54	14.70	13.23	10.87
68	39.54	29.98	26.16	24.09	20.44	15.81	14.05	12.65	10.39
71	37.87	28.71	25.06	23.07	19.57	15.14	13.46	12.11	9.95
74	36.34	27.55	24.04	22.13	18.78	14.53	12.91	11.62	9.55
77	34.92	26.47	23.11	21.27	18.05	13.96	12.41	11.17	9.18
80	33.61	25.48	22.24	20.47	17.37	13.44	11.94	10.75	8.83
83	32.40	24.56	21.44	19.73	16.74	12.95	11.51	10.36	8.52
86	31.27	23.70	20.69	19.05	16.16	12.50	11.11	10.00	8.22
89	30.21	22.90	19.99	18.40	15.62	12.08	10.74	9.66	7.94
92	29.23	22.16	19.34	17.80	15.11	11.68	10.39	9.35	7.68
95	28.31	21.46	18.73	17.24	14.63	11.31	10.06	9.05	7.44
98	27.44	20.80	18.15	16.71	14.18	10.97	9.75	8.77	7.21
101	26.62	20.18	17.62	16.22	13.76	10.64	9.46	8.51	7.00
104	25.86	19.60	17.11	15.75	13.36	10.34	9.19	8.27	6.80

NOTE:

WOOD BUCK NOT INSTALLED BY AMERICAN WINDOWS CORP. ARCHIECT OR ENGINEER OF RECORD MUST VERIFY WOOD BUCK CAPACITY TO SUSTAIN LOADS BEING IMPOSED BY WINDOW AND MULLION SYSTEM.

PRODUCT RENEWED
as complying with the Florida Building Code
Acceptance No. 05-0512.01
Expiration Date MAY 1, 2006
By Miami Dade Product Control Division

PRODUCT RENEWED
ACCEPTANCE No. 01-0918.04
EXPIRATION DATE May 1, 2005
By
PRODUCT CONTROL DIVISION
BUILDING CODE COMPLIANCE OFFICE

9/16/01

Florida P.E. No. 37337
SAUL PEREZ
STRUCTURAL ENGINEER
10461 NW 82nd Place,
MIAMI, FL. 33016
(305) 885-0088

REVISIONS
5/13/97
10/12/01

MULLION DETAIL
KD WINDOWS
3705 Shares Pl. - Riviera Beach, Fl. 33404

DATE 1/23/
SCALE FUL
DRAWN MO
PROJECT
9507
DRAWING NUMBER
4

TYPE "B" ANCHOR

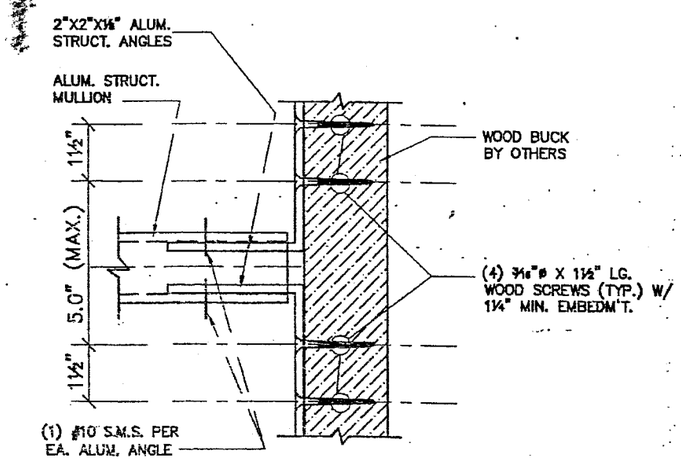

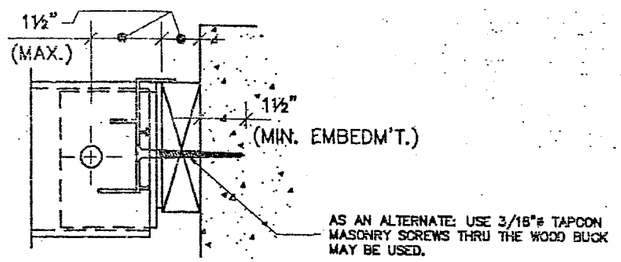

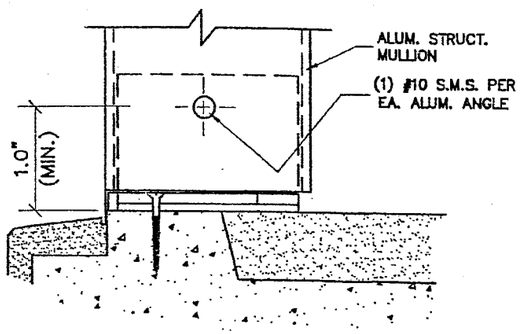

Anchor Design Load Pressure (psf)

Type B : 4 - 3/16" Wood Screws per End in wood buck
(4 - 3/16" Tap-Con Screws per End thru Wood Buck)

Tributary Width (in.)	Mullion Length (in.)								
	38.375	50.625	58	63	74.25	96	108	120	146
20	268.90	203.84	177.92	163.80	138.98	107.49	95.55	85.99	70.68
23	233.83	177.25	154.71	142.43	120.85	93.47	83.09	74.78	61.46
26	206.85	156.80	136.86	126.00	106.91	82.69	73.50	66.15	54.37
29	185.45	140.58	122.70	112.96	95.85	74.13	65.90	59.31	48.74
32	168.07	127.40	111.20	102.37	86.86	67.18	59.72	53.75	44.17
35	153.66	116.48	101.67	93.60	79.42	61.42	54.60	49.14	40.39
38	141.53	107.28	93.64	86.21	73.15	56.57	50.29	45.26	37.20
41	131.17	99.43	86.79	79.90	67.79	52.44	46.61	41.95	34.48
44	122.23	92.65	80.87	74.45	63.17	48.86	43.43	39.09	32.13
47	114.43	86.74	75.71	69.70	59.14	45.74	40.66	36.59	30.08
50	107.56	81.53	71.17	65.52	55.59	43.00	38.22	34.40	28.27
53	101.47	76.92	67.14	61.81	52.45	40.56	36.06	32.45	26.67
56	96.04	72.80	63.54	58.50	49.64	38.39	34.12	30.71	25.24
59	91.15	69.10	60.31	55.52	47.11	36.44	32.39	29.15	23.96
62	86.74	65.75	57.39	52.84	44.83	34.67	30.82	27.74	22.80
65	82.74	62.72	54.74	50.40	42.76	33.07	29.40	26.46	21.75
68	79.09	59.95	52.33	48.18	40.88	31.62	28.10	25.29	20.79
71	75.75	57.42	50.12	46.14	39.15	30.28	26.92	24.22	19.91
74	72.68	55.09	48.09	44.27	37.56	29.05	25.82	23.24	19.10
77	69.85	52.94	46.21	42.54	36.10	27.92	24.82	22.34	18.36
80	67.23	50.96	44.48	40.95	34.74	26.87	23.89	21.50	17.67
83	64.80	49.12	42.87	39.47	33.49	25.90	23.02	20.72	17.03
86	62.54	47.40	41.38	38.09	32.32	25.00	22.22	20.00	16.44
89	60.43	45.81	39.98	36.81	31.23	24.16	21.47	19.32	15.88
92	58.46	44.31	38.68	35.61	30.21	23.37	20.77	18.69	15.37
95	56.61	42.91	37.46	34.48	29.26	22.63	20.12	18.10	14.88
98	54.88	41.60	36.31	33.43	28.36	21.94	19.50	17.55	14.42
101	53.25	40.36	35.23	32.44	27.52	21.29	18.92	17.03	14.00
104	51.71	39.20	34.21	31.50	26.73	20.67	18.37	16.54	13.59

NOTE:

WOOD BUCK NOT INSTALLED BY AMERICAN WINDOWS CORP. ARCHIECT OR ENGINEER OF RECORD MUST VERIFY WOOD BUCK CAPACITY TO SUSTAIN LOADS BEING IMPOSED BY WINDOW AND MULLION SYSTEM.

PRODUCT RENEWED
as complying with the Florida
Building Code
Acceptance No. 05-0512.01
Expiration Date MAY 1, 2006
By
Miami-Dade Product Control
Division

PRODUCT RENEWED

ACCEPTANCE No. 01-0918.04

EXPIRATION DATE May 1, 2005

By

PRODUCT CONTROL DIVISION
BUILDING CODE COMPLIANCE OFFICE

9/16/01

Florida P.E. No. 37337
SAUL PEREZ
STRUCTURAL ENGINEER
16451 NW 88nd Place.
MIAMI, FL. 33018
(305) 555-0533

REVISIONS
3/13/97
10/12/01

MULLION DETAILS
KD WINDOWS
3705 Shores Pl. - Riviera Beach, Fl. 3404

DATE 1/2/97
SCALE FULL
DRAWN MCB
PROJECT 9607

DRAWING NUMBER
5

TYPE "C" ANCHOR

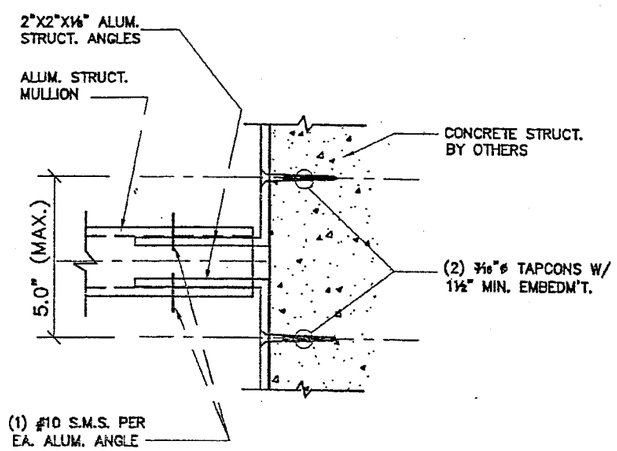

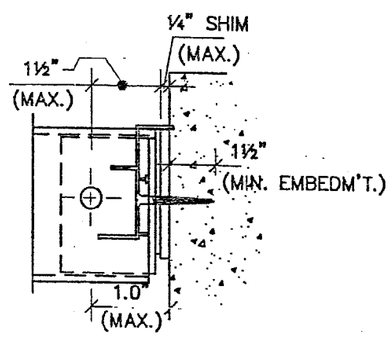

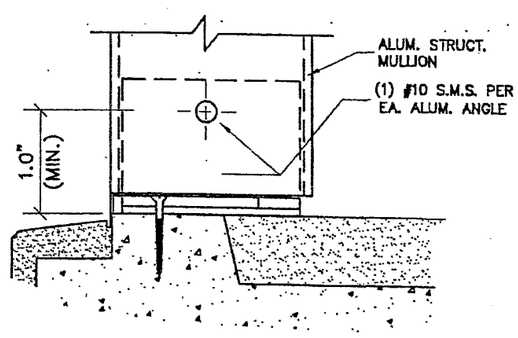

Anchor Design Load Pressure (psf)

Type C : 2 - 3/16" TAP-CON Screws per End in Concrete

Tributary Width (in.)	Mullion Length (in.)								
	38.375	50.625	58	63	74.25	96	108	120	146
20	136.05	103.13	90.02	82.87	70.32	54.39	48.34	43.51	35.76
23	118.31	89.68	78.28	72.06	61.15	47.29	42.04	37.83	31.10
26	104.66	79.33	69.25	63.75	54.09	41.84	37.19	33.47	27.51
29	93.83	71.13	62.08	57.15	48.50	37.51	33.34	30.01	24.66
32	85.03	64.46	56.26	51.80	43.95	33.99	30.21	27.19	22.35
35	77.75	58.93	51.44	47.36	40.18	31.08	27.62	24.86	20.43
38	71.61	54.28	47.38	43.62	37.01	28.62	25.44	22.90	18.82
41	66.37	50.31	43.91	40.43	34.30	26.53	23.58	21.22	17.44
44	61.84	46.88	40.92	37.67	31.96	24.72	21.97	19.78	16.25
47	57.90	43.89	38.31	35.27	29.92	23.14	20.57	18.51	15.22
50	54.42	41.25	36.01	33.15	28.13	21.75	19.34	17.40	14.30
53	51.34	38.92	33.97	31.27	26.54	20.52	18.24	16.42	13.49
56	48.59	36.83	32.15	29.60	25.11	19.42	17.27	15.54	12.77
59	46.12	34.96	30.51	28.09	23.84	18.44	16.39	14.75	12.12
62	43.89	33.27	29.04	26.73	22.68	17.54	15.59	14.04	11.54
65	41.86	31.73	27.70	25.50	21.64	16.73	14.87	13.39	11.00
68	40.02	30.33	26.48	24.37	20.68	16.00	14.22	12.80	10.52
71	38.33	29.05	25.36	23.34	19.81	15.32	13.62	12.26	10.07
74	36.77	27.87	24.33	22.40	19.00	14.70	13.07	11.76	9.67
77	35.34	26.79	23.38	21.53	18.26	14.13	12.56	11.30	9.29
80	34.01	25.78	22.50	20.72	17.58	13.60	12.09	10.88	8.94
83	32.78	24.85	21.69	19.97	16.94	13.11	11.65	10.48	8.62
86	31.64	23.98	20.93	19.27	16.35	12.65	11.24	10.12	8.32
89	30.57	23.18	20.23	18.62	15.80	12.22	10.86	9.78	8.04
92	29.58	22.42	19.57	18.02	15.29	11.82	10.51	9.46	7.77
95	28.64	21.71	18.95	17.45	14.80	11.45	10.18	9.16	7.53
98	27.77	21.05	18.37	16.91	14.35	11.10	9.87	8.88	7.30
101	26.94	20.42	17.83	16.41	13.92	10.77	9.57	8.62	7.08
104	26.16	19.83	17.31	15.94	13.52	10.46	9.30	8.37	6.88

NOTE:

WOOD BUCK NOT INSTALLED BY AMERICAN WINDOWS CORP. ARCHIECT OR ENGINEER OF RECORD MUST VERIFY WOOD BUCK CAPACITY TO SUSTAIN LOADS BEING IMPOSED BY WINDOW AND MULLION SYSTEM.

PRODUCT RENEWED
as complying with the Florida Building Code
Acceptance No. 05-0512.01
Expiration Date MAY 1, 2006
By Manuel Perez
Miami Dade Product Control Division

PRODUCT RENEWED

ACCEPTANCE No. 01-0918.04

EXPIRATION DATE MAY 1, 2005

By

PRODUCT CONTROL DIVISION
BUILDING CODE COMPLIANCE OFFICE

9/6/01

Florida P.E. No. 37337

SAUL PEREZ
STRUCTURAL ENGINEER
10451 NW 88nd Place.
MIAMI, FL. 33016 (305) 558-0058

REVISIONS
3/13/97
10/12/01

MULLION DETAILS
KD WINDOWS
3705 Shores Pl. ~ Riviera Beach, Fl 33404

DATE 1/21/97
SCALE FULL
DRAWN MOB
PROJECT 9607
DRAWING NUMBER 6

TYPE "D" ANCHOR

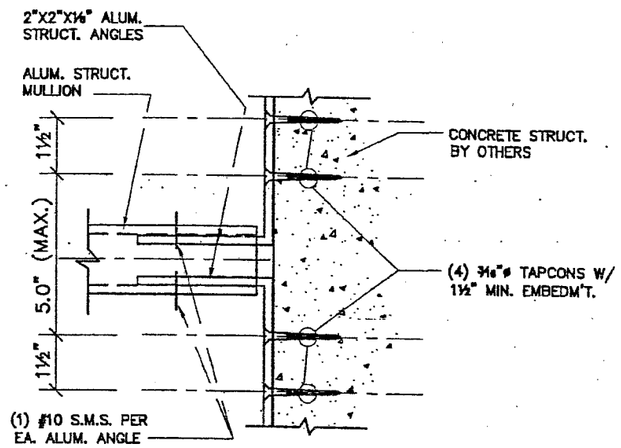

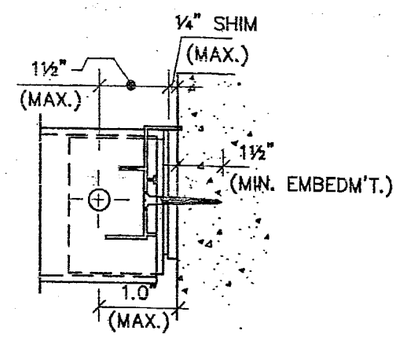

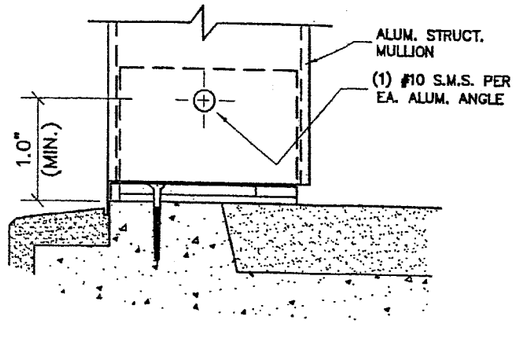

Anchor Design Load Pressure (psf)

Type D : 4 - 3/16" TAP-CON Screws per End in Concrete

Tributary Width (in.)	Mullion Length (in.)								
	38.375	50.625	58	63	74.25	96	108	120	146
20	272.11	206.27	180.04	165.75	140.64	108.77	96.69	87.02	71.52
23	236.62	179.36	156.55	144.13	122.29	94.59	84.08	75.67	62.19
26	209.31	158.67	138.49	127.50	108.18	83.67	74.37	66.94	55.02
29	187.66	142.25	124.16	114.31	96.99	75.02	66.68	60.01	49.33
32	170.07	128.92	112.52	103.59	87.90	67.98	60.43	54.39	44.70
35	155.49	117.87	102.88	94.71	80.36	62.16	55.25	49.72	40.87
38	143.22	108.56	94.76	87.24	74.02	57.25	50.89	45.80	37.64
41	132.74	100.62	87.82	80.85	68.60	53.06	47.16	42.45	34.89
44	123.69	93.76	81.84	75.34	63.93	49.44	43.95	39.55	32.51
47	115.79	87.77	76.61	70.53	59.84	46.29	41.14	37.03	30.43
50	108.84	82.51	72.02	66.30	56.25	43.51	38.67	34.81	28.61
53	102.68	77.84	67.94	62.55	53.07	41.05	36.49	32.84	26.99
56	97.18	73.67	64.30	59.20	50.23	38.85	34.53	31.08	25.54
59	92.24	69.92	61.03	56.19	47.67	36.87	32.78	29.50	24.24
62	87.78	66.54	58.08	53.47	45.37	35.09	31.19	28.07	23.07
65	83.73	63.47	55.40	51.00	43.27	33.47	29.75	26.77	22.01
68	80.03	60.67	52.95	48.75	41.36	31.99	28.44	25.59	21.04
71	76.65	58.10	50.71	46.69	39.62	30.64	27.24	24.51	20.15
74	73.54	55.75	48.66	44.80	38.01	29.40	26.13	23.52	19.33
77	70.68	53.58	46.76	43.05	36.53	28.25	25.11	22.60	18.58
80	68.03	51.57	45.01	41.44	35.16	27.19	24.17	21.75	17.88
83	65.57	49.70	43.38	39.94	33.89	26.21	23.30	20.97	17.23
86	63.28	47.97	41.87	38.55	32.71	25.30	22.49	20.24	16.63
89	61.15	46.35	40.46	37.25	31.60	24.44	21.73	19.55	16.07
92	59.15	44.84	39.14	36.03	30.57	23.65	21.02	18.92	15.55
95	57.29	43.42	37.90	34.89	29.61	22.90	20.36	18.32	15.06
98	55.53	42.09	36.74	33.83	28.70	22.20	19.73	17.76	14.60
101	53.88	40.84	35.65	32.82	27.85	21.54	19.15	17.23	14.16
104	52.33	39.67	34.62	31.87	27.05	20.92	18.59	16.73	13.75

NOTE:

WOOD BUCK NOT INSTALLED BY AMERICAN WINDOWS CORP. ARCHIECT OR ENGINEER OF RECORD MUST VERIFY WOOD BUCK CAPACITY TO SUSTAIN LOADS BEING IMPOSED BY WINDOW AND MULLION SYSTEM.

PRODUCT RENEWED
as complying with the Florida Building Code
Acceptance No. 05-0512.01
Expiration Date MAY 1, 2006
By Manuel Perez
Miami-Dade Product Control Division

PRODUCT RENEWED
ACCEPTANCE No. 01-0918.04
EXPIRATION DATE MAY 1, 2005
By
PRODUCT CONTROL DIVISION
BUILDING CODE COMPLIANCE OFFICE

9/16/04

Florida P.E. No. 37337
SAUL PEREZ
STRUCTURAL ENGINEER
10461 NW 88nd Place.
MIAMI, FL. 33016 (305) 558-0088

REVISIONS
3/13/9
10/12/0

MULLION DETAILS
KD WINDOWS
3705 Shares Pl. ~ Riviera Beach, Fl. 33404

DATE
SCALE
DRAWN
PROJECT
960
DRAWING NUMBER
7

TYPE "E" ANCHOR

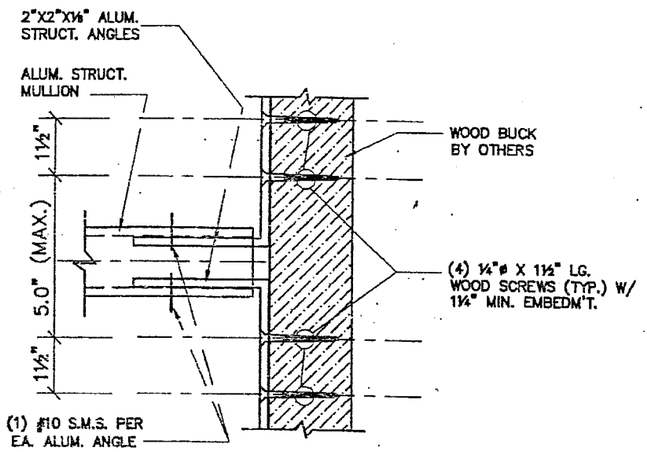

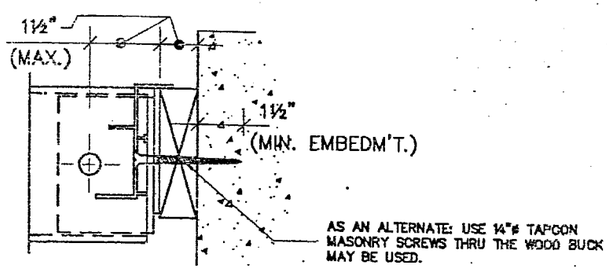

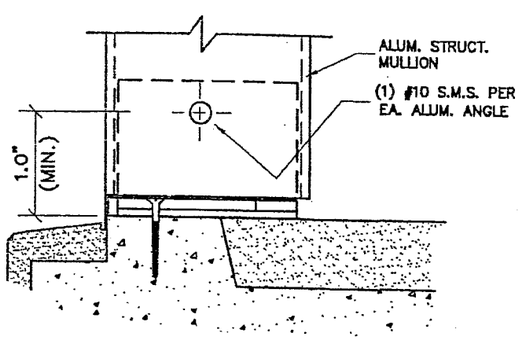

Anchor Design Load Pressure (psf)									
Type E : 4 - 1/4" Wood Screws per End in wood buck									
(4 - 1/4" Tap-Con Screws per End thru Wood Buck)									
Tributary	Mullion Length (in.)								
Width (in.)	38.375	50.625	58	63	74.25	96	108	120	146
20	342.52	259.64	226.63	208.64	177.03	136.92	121.71	109.54	90.03
23	297.85	225.77	197.07	181.43	153.94	119.06	105.83	95.25	78.29
26	263.48	199.72	174.33	160.49	136.18	105.32	93.62	84.26	69.25
29	236.22	179.06	156.29	143.89	122.09	94.43	83.94	75.54	62.09
32	214.08	162.28	141.64	130.40	110.64	85.58	76.07	68.46	56.27
35	195.73	148.37	129.50	119.22	101.16	78.24	69.55	62.59	51.45
38	180.28	136.65	119.28	109.81	93.17	72.06	64.06	57.65	47.38
41	167.08	126.65	110.55	101.78	86.36	66.79	59.37	53.43	43.92
44	155.69	118.02	103.01	94.84	80.47	62.24	55.32	49.79	40.92
47	145.75	110.49	96.44	88.78	75.33	58.26	51.79	46.61	38.31
50	137.01	103.86	90.55	83.46	70.81	54.77	48.68	43.81	36.01
53	129.25	97.98	85.52	78.73	66.80	51.67	45.93	41.33	33.97
56	122.33	92.73	80.94	74.51	63.22	48.90	43.47	39.12	32.15
59	116.11	88.01	76.82	70.73	60.01	46.41	41.26	37.13	30.52
62	110.49	83.76	73.11	67.30	57.11	44.17	39.26	35.33	29.04
65	105.39	79.89	69.73	64.20	54.47	42.13	37.45	33.70	27.70
68	100.74	76.36	66.65	61.36	52.07	40.27	35.80	32.22	26.48
71	96.49	73.14	63.84	58.77	49.87	38.57	34.28	30.86	25.36
74	92.57	70.17	61.25	56.39	47.85	37.01	32.89	29.60	24.33
77	88.97	67.44	58.86	54.19	45.98	35.56	31.61	28.45	23.38
80	85.63	64.91	56.66	52.16	44.26	34.23	30.43	27.38	22.51
83	82.54	62.56	54.61	50.27	42.66	32.99	29.33	26.39	21.69
86	79.66	60.38	52.70	48.52	41.17	31.84	28.30	25.47	20.94
89	76.97	58.35	50.93	46.89	39.78	30.77	27.35	24.61	20.23
92	74.46	56.44	49.27	45.36	38.48	29.77	26.46	23.81	19.57
95	72.11	54.66	47.71	43.92	37.27	28.83	25.62	23.06	18.95
98	69.90	52.99	46.25	42.58	36.13	27.94	24.84	22.35	18.37
101	67.83	51.41	44.88	41.31	35.06	27.11	24.10	21.69	17.83
104	65.87	49.93	43.58	40.12	34.04	26.33	23.41	21.06	17.31
107	64.02	48.53	42.36	39.00	33.09	25.59	22.75	20.47	16.83
110	62.28	47.21	41.20	37.93	32.19	24.89	22.13	19.92	16.37
113	60.62	45.95	40.11	36.93	31.33	24.23	21.54	19.39	15.93
116	59.06	44.77	39.07	35.97	30.52	23.61	20.98	18.89	15.52
119	57.57	43.64	38.09	35.07	29.75	23.01	20.45	18.41	15.13
122	56.15	42.56	37.15	34.20	29.02	22.45	19.95	17.96	14.76
125	54.80	41.54	36.26	33.38	28.32	21.91	19.47	17.53	14.40
128	53.52	40.57	35.41	32.60	27.66	21.39	19.02	17.12	14.07
131	52.29	39.64	34.60	31.85	27.03	20.90	18.58	16.72	13.74
134	51.12	38.75	33.82	31.14	26.42	20.44	18.17	16.35	13.44
137	50.00	37.90	33.08	30.46	25.84	19.99	17.77	15.99	13.14
140	48.93	37.09	32.38	29.81	25.29	19.56	17.39	15.65	12.86

NOTE:

WOOD BUCK NOT INSTALLED BY AMERICAN WINDOWS CORP. ARCHIECT OR ENGINEER OF RECORD MUST VERIFY WOOD BUCK CAPACITY TO SUSTAIN LOADS BEING IMPOSED BY WINDOW AND MULLION SYSTEM.

PRODUCT RENEWED

ACCEPTANCE No. 01-0918.04

EXPIRATION DATE May 1, 2005

By

PRODUCT CONTROL DIVISION
BUILDING CODE COMPLIANCE OFFICE

PRODUCT RENEWED
as complying with the Florida Building Code
Acceptance No 05-0512.01
Expiration Date MAY 1, 2006
By
Miami Dade Product Control Division

9/16/01

Florida P.E. No. 37337
SAUL PEREZ
STRUCTURAL ENGINEER
16461 NW 82nd Place.
MIAMI, FL. 33016 (305) 558-0588

REVISIONS
3/13/97
10/12/01

MULLION DETAILS
KD WINDOWS
3705 Shares Pl. - Riviera Beach, Fl. 33404

DATE 12/97
SCALE FLL
DRAWN MOS
PROJECT 9607
DRAWING NUMBER 8

TYPE "F" ANCHOR

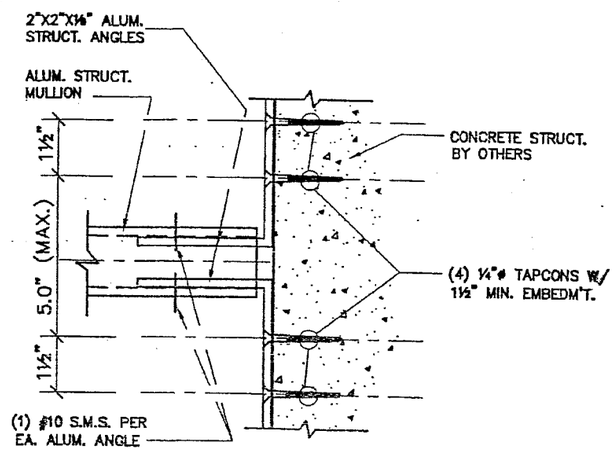

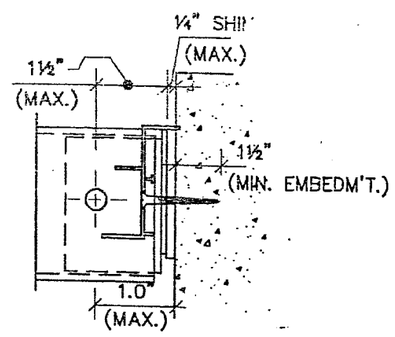

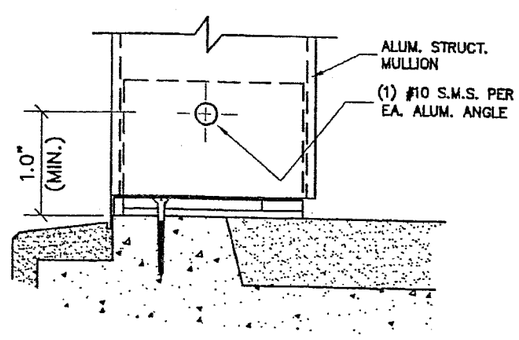

Anchor Design Load Pressure (psf)

Type F : 4 - 1/4" TAP-CON Screws per End in Concrete

Tributary Width (in.)	Mullion Length (in.)								
	38.375	50.625	58	63	74.25	96	108	120	146
20	370.15	280.58	244.90	225.47	191.31	147.96	131.52	118.37	97.29
23	321.87	243.98	212.96	196.06	166.35	128.66	114.37	102.93	84.60
26	284.73	215.83	188.39	173.44	147.16	113.82	101.17	91.05	74.84
29	255.27	193.50	168.90	155.49	131.93	102.04	90.71	81.63	67.10
32	231.34	175.36	153.07	140.92	119.57	92.48	82.20	73.98	60.81
35	211.51	160.33	139.95	128.84	109.32	84.55	75.16	67.64	55.59
38	194.81	147.67	128.90	118.67	100.69	77.88	69.22	62.30	51.21
41	180.56	136.87	119.47	109.98	93.32	72.18	64.16	57.74	47.46
44	168.25	127.54	111.32	102.49	86.96	67.26	59.78	53.80	44.22
47	157.51	119.40	104.21	95.94	81.41	62.96	55.97	50.37	41.40
50	148.06	112.23	97.96	90.19	76.52	59.19	52.61	47.35	38.92
53	139.68	105.88	92.42	85.08	72.19	55.84	49.63	44.67	36.71
56	132.20	100.21	87.47	80.52	68.32	52.84	46.97	42.28	34.75
59	125.47	95.11	83.02	76.43	64.85	50.16	44.58	40.13	32.98
62	119.40	90.51	79.00	72.73	61.71	47.73	42.43	38.18	31.38
65	113.89	86.33	75.36	69.37	58.86	45.53	40.47	36.42	29.94
68	108.87	82.52	72.03	66.31	56.27	43.52	38.68	34.81	28.61
71	104.27	79.04	68.99	63.51	53.89	41.68	37.05	33.34	27.41
74	100.04	75.83	66.19	60.94	51.70	39.99	35.55	31.99	26.29
77	96.14	72.88	63.61	58.56	49.69	38.43	34.16	30.75	25.27
80	92.54	70.15	61.23	56.37	47.83	36.99	32.88	29.59	24.32
83	89.19	67.61	59.01	54.33	46.10	35.65	31.69	28.52	23.44
86	86.08	65.25	56.95	52.43	44.49	34.41	30.59	27.53	22.63
89	83.18	63.05	55.03	50.67	42.99	33.25	29.56	26.60	21.86
92	80.47	61.00	53.24	49.01	41.59	32.17	28.59	25.73	21.15
95	77.93	59.07	51.56	47.47	40.27	31.15	27.69	24.92	20.48
98	75.54	57.26	49.98	46.01	39.04	30.20	26.84	24.16	19.86
101	73.30	55.56	48.50	44.65	37.88	29.30	26.04	23.44	19.27
104	71.18	53.96	47.10	43.36	36.79	28.45	25.29	22.76	18.71
107	69.19	52.45	45.78	42.14	35.76	27.66	24.58	22.13	18.19
110	67.30	51.01	44.53	40.99	34.78	26.90	23.91	21.52	17.69
113	65.51	49.66	43.35	39.91	33.86	26.19	23.28	20.95	17.22
116	63.82	48.38	42.22	38.87	32.98	25.51	22.68	20.41	16.77
119	62.21	47.16	41.16	37.89	32.15	24.87	22.10	19.89	16.35
122	60.68	46.00	40.15	36.96	31.36	24.26	21.56	19.40	15.95
125	59.22	44.89	39.18	36.07	30.61	23.67	21.04	18.94	15.57
128	57.84	43.84	38.27	35.23	29.89	23.12	20.55	18.50	15.20
131	56.51	42.84	37.39	34.42	29.21	22.59	20.08	18.07	14.85
134	55.25	41.88	36.55	33.65	28.55	22.08	19.63	17.67	14.52
137	54.04	40.96	35.75	32.91	27.93	21.60	19.20	17.28	14.20
140	52.88	40.08	34.99	32.21	27.33	21.14	18.79	16.91	13.90

NOTE:

WOOD BUCK NOT INSTALLED BY AMERICAN WINDOWS CORP. ARCHIECT OR ENGINEER OF RECORD MUST VERIFY WOOD BUCK CAPACITY TO SUSTAIN LOADS BEING IMPOSED BY WINDOW AND MULLION SYSTEM.

PRODUCT RENEWED

ACCEPTANCE No. 01-0918.04

EXPIRATION DATE May 1, 2005

By

PRODUCT CONTROL DIVISION
BUILDING CODE COMPLIANCE OFFICE

PRODUCT RENEWED
as complying with the Florida Building Code
Acceptance No. 05-0512.01
Expiration Date MAY 1, 2006
By
Miami-Dade Product Control Division

9/16/01

Florida P.E. No. 37337
SAUL PEREZ
STRUCTURAL ENGINEER
10461 NW 88nd Place,
MIAMI, FL. 33016
(305) 558-0588

REVISIONS
3/13/97
10/12/01

MULLION DETAILS

KD WINDOWS
3705 Shares Pl. ~ Riviera Beach, Fl. 33404

DATE 3/21/97
SCALE FULL
DRAWN MOB
PROJECT 9607

DRAWING NUMBER
9