MIAMI-DADE COUNTY

BUILDING CODE COMPLIANCE OFFICE (BCCO)
PRODUCT CONTROL DIVISION

MIAMI-DADE COUNTY, FLORIDA
METRO-DADE FLAGLER BUILDING
140 WEST FLAGLER STREET, SUITE 1603
MIAMI, FLORIDA 33130-1563
(305) 375-2901 FAX (305) 375-2908
www.buildingcodeonline.com

# NOTICE OF ACCEPTANCE (NOA)

**Peetz Windows and Doors, Inc.**
**5783 SW 40th Street PMB 220**
**Miami, FL 33155**

**SCOPE:**

This NOA is being issued under the applicable rules and regulations governing the use of construction materials. The documentation submitted has been reviewed by Miami-Dade County Product Control Division and accepted by the Board of Rules and Appeals (BORA) to be used in Miami Dade County and other areas where allowed by the Authority Having Jurisdiction (AHJ).

This NOA shall not be valid after the expiration date stated below. The Miami-Dade County Product Control Division (In Miami Dade County) and/or the AHJ (in areas other than Miami Dade County) reserve the right to have this product or material tested for quality assurance purposes. If this product or material fails to perform in the accepted manner, the manufacturer will incur the expense of such testing and the AHJ may immediately revoke, modify, or suspend the use of such product or material within their jurisdiction. BORA reserves the right to revoke this acceptance, if it is determined by Miami-Dade County Product Control Division that this product or material fails to meet the requirements of the applicable building code.

This product is approved as described herein, and has been designed to comply with the Florida Building Code, including the High Velocity Hurricane Zone.

**DESCRIPTION: "American Fixed Outswing Casement" Wood Fixed Windows -L.M.I.**

**APPROVAL DOCUMENT:** Drawing No. **1322**, titled "American Out-Swing Fixed Casement Impact Wood Windows", sheets 1 through 7 of 7, dated 03/15/05, prepared by W.W. Schaeffer Engineering & Consulting, P.A, signed and sealed by Warren W. Schaefer, P.E., bearing the Miami-Dade County Product Control Approval stamp with the Notice of Acceptance number and approval date by the Miami-Dade County Product Control Division.

**MISSILE IMPACT RATING: Large and Small Missile Impact**

**LABELING:** Each unit shall bear a permanent label with the manufacturer's name or logo, city, state and following statement: "Miami-Dade County Product Control Approved", unless otherwise noted herein.

**RENEWAL** of this NOA shall be considered after a renewal application has been filed and there has been no change in the applicable building code negatively affecting the performance of this product.

**TERMINATION** of this NOA will occur after the expiration date or if there has been a revision or change in the materials, use, and/or manufacture of the product or process. Misuse of this NOA as an endorsement of any product, for sales, advertising or any other purposes shall automatically terminate this NOA. Failure to comply with any section of this NOA shall be cause for termination and removal of NOA.

**ADVERTISEMENT:** The NOA number preceded by the words Miami-Dade County, Florida, and followed by the expiration date may be displayed in advertising literature. If any portion of the NOA is displayed, then it shall be done in its entirety.

**INSPECTION:** A copy of this entire NOA shall be provided to the user by the manufacturer or its distributors and shall be available for inspection at the job site at the request of the Building Official.

This NOA consists of this page 1 and evidence pages E-1 and E-2, as well as approval document mentioned above.

The submitted documentation was reviewed by **Herminio F. Gonzalez, P.E., Director, BCCO**

PRODUCT CONTROL ACCEPTED 8/28/05

**Peetz Windows and Doors, Inc.**

## NOTICE OF ACCEPTANCE: EVIDENCE SUBMITTED

**A. DRAWINGS**

1. Manufacturer's die drawings and sections.
2. Drawing No. **1322**, titled "American Outswing Fixed Casement Impact Wood Windows", sheets 1 through 7 of 7, dated 03/15/05, prepared by W.W. Schaeffer Engineering & Consulting, P.A, signed and sealed by Warren W. Schaefer, P.E.

**B. TESTS**

1. Test reports on 1) Air Infiltration Test, per FBC, TAS 202-94
   2) Uniform Static Air Pressure Test, Loading per FBC, TAS 202-94.
   3) Water Resistance Test, per FBC, TAS 202-94.
   4) Large Missile Impact Test per FBC, TAS 201-94
   5) Cyclic Wind Pressure Loading per FBC, TAS 203-94
   6) Forced Entry Test, per FBC 2411 3.2.1 and TAS 202-94

   along with the manufacturer's parts drawings, installation diagram and marked-up drawings of a wood casement window prepared by Hurricane Test Laboratory, Inc. Test Report No. **HTL-0284-1018-04**, dated 06/03/05, signed and sealed by Vinu J. Abraham, P.E.
2. Test reports on 1) Air Infiltration Test, per FBC, TAS 202-94
   2) Uniform Static Air Pressure Test, Loading per FBC, TAS 202-94.
   3) Water Resistance Test, per FBC, TAS 202-94.
   4) Large Missile Impact Test per FBC, TAS 201-94
   5) Cyclic Wind Pressure Loading per FBC, TAS 203-94
   6) Forced Entry Test, per FBC 2411 3.2.1 and TAS 202-94

   along with the manufacturer's parts drawings, installation diagram and marked-up drawings of a wood casement window prepared by Hurricane Test Laboratory, Inc. Test Report No. **HTL-0284-0115-05**, dated 06/03/05, signed and sealed by Vinu J. Abraham, P.E.
3. Test reports on 1) Air Infiltration Test, per FBC, TAS 202-94
   2) Uniform Static Air Pressure Test, Loading per FBC, TAS 202-94.
   3) Water Resistance Test, per FBC, TAS 202-94.
   4) Large Missile Impact Test per FBC, TAS 201-94
   5) Cyclic Wind Pressure Loading per FBC, TAS 203-94

   along with the manufacturer's parts drawings, installation diagram and marked-up drawings of a wood casement window prepared by Hurricane Test Laboratory, Inc. Test Report No. **HTL-0284-0116-05**, dated 06/03/05, signed and sealed by Vinu J. Abraham, P.E.

for

**Herminio F. Gonzalez, P.E.**
**Director, Building Code Compliance Office**
**NOA No 05-0622.04**
**Expiration Date: August 18, 2010**
**Approval Date: August 18, 2005**

## NOTICE OF ACCEPTANCE: EVIDENCE SUBMITTED

**C. CALCULATIONS**

1. Anchor calculations and structural analysis, dated 04/07/05, prepared by W.W. Schaeffer Engineering & Consulting, P.A., signed and sealed by Warren Schaeffer, P.E.

**D. QUALITY ASSURANCE**

1. Miami Dade Building Code Compliance Office (BCCO).

**E. MATERIAL CERTIFICATIONS**

1. Notice of Acceptance No. **01-0205.02** issued to Solutia Inc. for their "Saflex /Keepsafe Maximum" dated 05/17/01, expiring on 05/21/06.
2. Notice of Acceptance No. **03-0415.13** issued to Solutia Inc. for their "Vanceva Composites" dated 12/11/03, expiring on 12/11/08.

**F. STATEMENTS**

1. Statement letter of conformance and no financial interest, dated June 10, 2005, signed and sealed by Warren Schaeffer, P.E.

**G. OTHER**

1. Letter from consultant stating that the product is in compliance with the Florida Building Code (FBC).

for M Kimble

**Herminio F. Gonzalez, P.E.**
**Director, Building Code Compliance Office**
**NOA No 05-0622.04**
**Expiration Date: August 18, 2010**
**Approval Date: August 18, 2005**

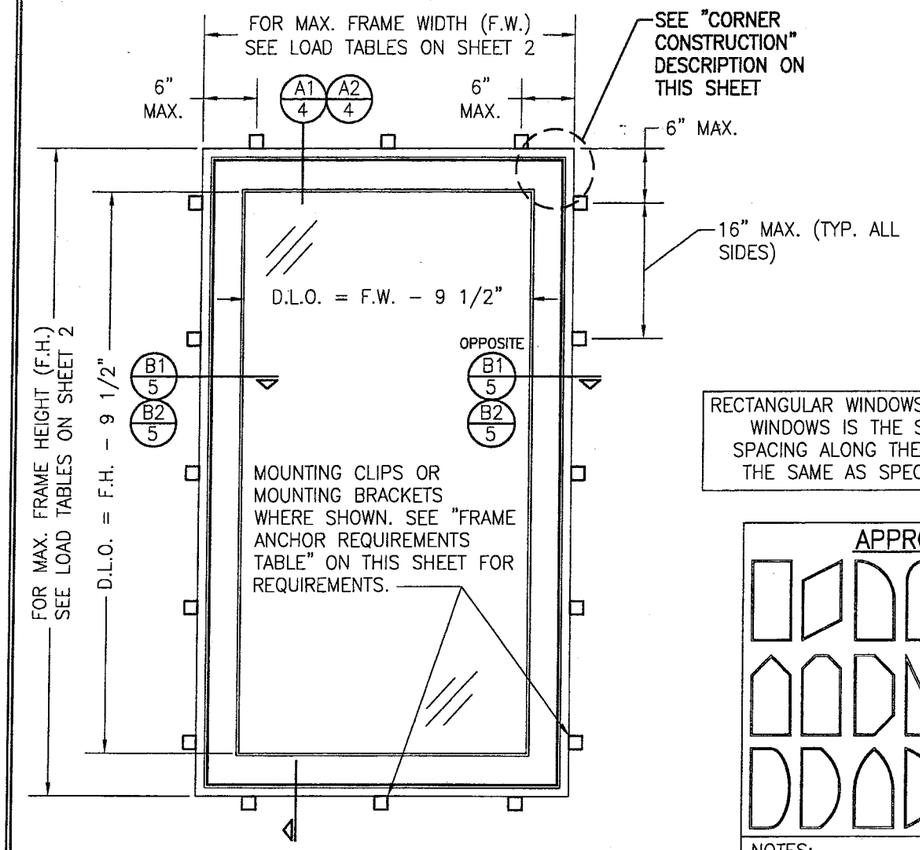


## EXTERIOR ELEVATION
## SINGLE FIXED WINDOW

SCALE: N.T.S.

LONG DIMENSION OF WINDOW MAY BE HORIZONTAL OR VERTICAL (HEIGHT & WIDTH MAY BE INTERCHANGED).

RECTANGULAR WINDOWS SHOWN. ANCHORING OF SHAPED WINDOWS IS THE SAME WITH REQUIRED ANCHOR SPACING ALONG THE FRAME CIRCUMFERENCE BEING THE SAME AS SPECIFIED FOR A STRAIGHT FRAME.

### APPROVED SHAPES

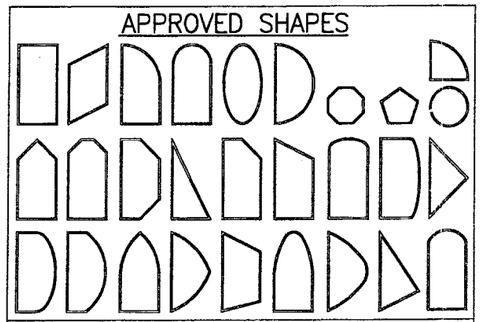

NOTES:

1. OTHER SHAPES MAY APPLY PROVIDING THEY ARE SIMILAR TO THOSE SHOWN & HAVE CORNER CONSTRUCTION AS DESCRIBED ON THIS SHEET.
2. ALL SHAPED UNITS MUST FIT INSCRIBED INTO THE ALLOWABLE RECTANGULAR UNITS & BE GOVERNED BY THE ALLOWABLE PRESSURE OF THE RESPECTIVE RECTANGULAR UNIT.

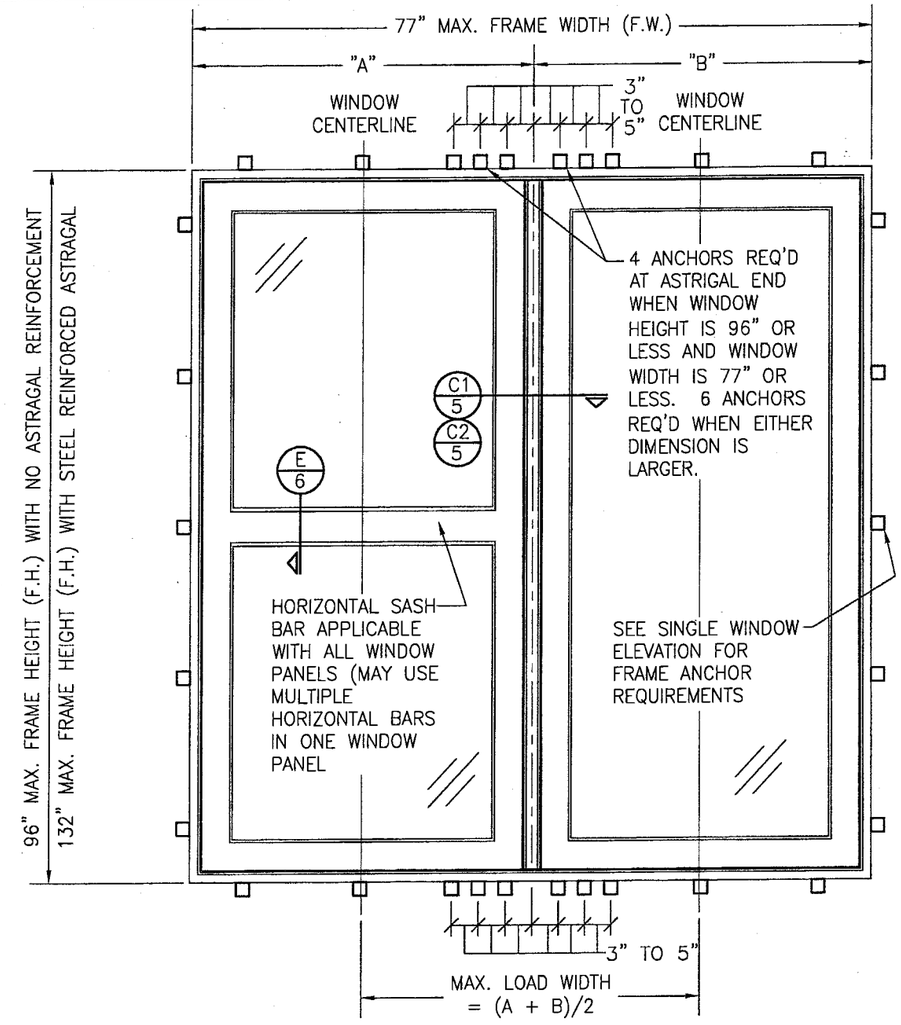


## EXTERIOR ELEVATION
## DOUBLE FIXED WINDOW WITH ASTRAGAL

SCALE: N.T.S.

SEE SINGLE WINDOW ELEVATION FOR WINDOW DETAIL NOT SHOWN

## GENERAL NOTES

1. THESE WINDOW SYSTEMS HAVE BEEN TESTED, ANALYZED AND APPROVED FOR DESIGN PRESSURES NOT TO EXCEED THOSE SHOWN IN THE "ALLOWABLE DESIGN LOADS" TABLE(S).
2. BUCKING, OPENINGS & BUCKING FASTENERS MUST BE PROPERLY DESIGNED & INSTALLED TO TRANSFER WIND LOADS TO THE STRUCTURE.
3. ALL HARDWARE & FASTENERS SHALL BE IN ACCORDANCE WITH THESE DRAWINGS & MAY NOT VARY UNLESS SPECIFICALLY MENTIONED ON THE DRAWINGS.
4. THE DETAILS & SPECIFICATIONS SHOWN HEREIN REPRESENT THE PRODUCTS TESTED & PROPOSED FOR WATER, AIR, IMPACT, CYCLIC & UNIFORM STATIC AIR PRESSURE TESTING IN CONFORMANCE WITH THE 2004 FLORIDA BUILDING CODE PROTOCOLS TAS-201, 202 & 203 FOR LARGE MISSILE IMPACT WINDOWS.
5. THESE WINDOW SYSTEMS HAVE BEEN DESIGNED IN ACCORDANCE WITH THE 2004 FLORIDA BUILDING CODE (FBC) INCLUDING HIGH VELOCITY HURRICANE ZONES (HVHZ).
6. IMPACT SHUTTERS ARE NOT REQUIRED WITH THESE WINDOWS.
7. ALL ANCHORS SHALL BE INSTALLED AS SPECIFIED ON THESE DRAWINGS. SPECIFIED EMBEDMENT TO BASE MATERIAL SHALL BE BEYOND WALL FINISH OR STUCCO.
8. ALL FRAME ANCHORS SECURING WINDOW FRAME TO PRESSURE TREATED BUCKS OR WOOD FRAMING SHALL BE CAPABLE OF RESISTING CORROSION CAUSED BY THE PRESSURE TREATING CHEMICALS IN THE WOOD.

## CORNER CONSTRUCTION:

JAMBS: COPED, BUTTED TOGETHER, JOINED WITH 3 NO. 10 X 3 1/8" SCREWS & GLUED WITH BINDAN D4 OR EQUAL.

SASH: MULTI-FORKED, BUTTED & GLUED WITH BINDAN D4 OR EQUAL.

### FRAME ANCHOR REQUIREMENTS TABLE

| OPENING TYPE (SUBSTRATE) | JAMB TO OPENING FASTENER TYPE | MINIMUM EMBED | MINIMUM EDGE DIST. |
|---|---|---|---|
| **MOUNTING CLIP SCREWS** | | | |
| 2X_ WOOD FRAME OR BUCK | NO. 8 X 1 1/2" SMS SCREWS | 1 3/8" | 1/2" |
| MIN. 1/8" THICK 36 KSI STEEL | NO. 8 SELF TAPPING SCREWS | FULL | 1/2" |
| **MOUNTING BRACKET SCREWS** | | | |
| 2X_ WOOD FRAME OR BUCK | NO. 8 X 1 1/2" SMS SCREWS | 1 3/8" | 1/2" |
| MIN. 18 GA. 33 KSI METAL STUD OR 36 KSI STRUCTURAL STEEL | NO. 8 SELF TAPPING SCREWS | FULL | 1/2" |

(1) CONCRETE SCREWS SHALL BE ELCO OR ITW RAMSET/RED HEAD TAPCONS OR HILTI KWIK-CON II (HARDENED STEEL OR S.S.).

| ALLOWABLE DESIGN PRESSURE (ALL CONDITIONS) |
|---|
| SEE LOAD TABLES ON SHEET 2 |

Approved as complying with the Florida Building Code
Date 06/16/05
NOA# 05-0622.04
Miami Dade Product Control Division
By

| DRAWN BY: S.T.R. | CHECKED BY: W.W.S. |
|---|---|
| PLOT: 1=16 | DATE: 3/15/05 |

| NO. | REVISION DESCRIPTION | BY | DATE |
|---|---|---|---|
| | | | |

DRAWING TITLE
AMERICAN OUT-SWING FIXED CASEMENT IMPACT WOOD WINDOWS

MANUFACTURER
PEETZ WINDOWS & DOORS
5783 S.W. 40TH STREET, PMB 220
MIAMI, FL 33155
305-665-0291

CONSULTANTS
W. W. SCHAEFER ENGINEERING & CONSULTING, P.A.
8895 N. MILITARY TRAIL; SUITE C-204
PALM BEACH GARDENS, FL 33410
PHONE: 561-775-4902 FAX: 561-775-4903

CERTIFICATION
JUL 14 2005
WARREN W. SCHAEFER, P.E.
P.E. NO. 44135

DRAWING NO. 1322
REV.
SHEET NO. 1 OF 7

## ALLOWABLE SINGLE WINDOW DESIGN PRESSURE

| MAXIMUM FRAME LONG DIMENSION (IN.) | MAXIMUM SHORT LONG DIMENSION (IN.) | ALLOWABLE PRESSURE (POS. & NEG. PSF) | | | |
|---|---|---|---|---|---|
| | | WITH I.G. GLAZING | | WITH NON-I.G. GLAZING | |
| | | OPTION 1 | OPTION 2 | OPTION 1 | OPTION 2 |
| 132 | 39 | 75.0 | 75.0 | 75.0 | 75.0 |
| 120 | 42 | 71.9 | 71.9 | 71.9 | 71.9 |
| | 36 | 75.0 | 75.0 | 75.0 | 75.0 |
| 108 | 48 | 66.8 | 66.8 | 65.2 | 65.2 |
| | 42 | 73.7 | 73.7 | 73.7 | 73.7 |
| | 36 | 75.0 | 75.0 | 75.0 | 75.0 |
| 96 | 54 | X | 64.2 | X | 64.2 |
| | 48 | 69.2 | 69.2 | 69.2 | 69.2 |
| | 42 | 75.0 | 75.0 | 75.0 | 75.0 |
| | 39 | 75.0 | 75.0 | 75.0 | 75.0 |
| 90 | 54 | X | 65.9 | X | 65.9 |
| | 48 | 72.8 | 72.8 | 72.8 | 72.8 |
| | 42 | 75.0 | 75.0 | 75.0 | 75.0 |
| 84 | 60 | X | 64.6 | X | 64.6 |
| | 54 | X | 68.0 | X | 68.0 |
| | 48 | 72.7 | 72.7 | 72.7 | 72.7 |
| | 44 | 75.0 | 75.0 | 75.0 | 75.0 |
| 78 | 66 | X | 65.5 | X | 65.5 |
| | 60 | X | 67.5 | X | 67.5 |
| | 54 | X | 70.6 | X | 70.6 |
| | 48 | 75.0 | 75.0 | 75.0 | 75.0 |
| 72 | 66 | X | 68.2 | X | 68.2 |
| | 60 | X | 71.2 | X | 71.2 |
| | 54 | 73.9 | 73.9 | 73.9 | 73.9 |
| | 52 | 75.0 | 75.0 | 75.0 | 75.0 |
| | 48 | 75.0 | 75.0 | 75.0 | 75.0 |
| 66 | 66 | X | 68.2 | X | 68.2 |
| | 60 | 75.0 | 75.0 | 75.0 | 75.0 |
| 60 | 60 | 75.0 | 75.0 | 75.0 | 75.0 |

NOTES:

1. SEE GLAZING DETAILS FOR GLAZING OPTIONS
2. CROSSED OUT BOXES DESIGNATE SIZES NOT ACCEPTABLE FOR THE RESPECTIVE GLASS OPTION.

## FIXED ASTRIGAL ALLOWABLE LOAD TABLE

| MAXIMUM ASTRIGAL SPAN (IN.) | MAXIMUM LOAD WIDTH (IN.) | ALLOWABLE PRESSURE (POS. & NEG. PSF) | |
|---|---|---|---|
| | | NON-REINFORCED ASTRIGAL | REINFORCED ASTRIGAL |
| 132 | 39 | N/A | 56.0 |
| | 36 | N/A | 59.9 |
| | 30 | N/A | 70.0 |
| | 24 | N/A | 75.0 |
| 120 | 42 | N/A | 59.1 |
| | 39 | N/A | 62.7 |
| | 36 | N/A | 66.9 |
| | 30 | N/A | 75.0 |
| 108 | 48 | N/A | 60.9 |
| | 42 | N/A | 67.2 |
| | 39 | N/A | 71.2 |
| | 36 | N/A | 75.0 |
| 96 | 54 | 46.8 | 65.9 |
| | 48 | 51.5 | 71.1 |
| | 42 | 57.7 | 75.0 |
| | 39 | 61.6 | 75.0 |
| | 36 | 66.0 | 75.0 |
| | 30 | 75.0 | 75.0 |
| 90 | 54 | 54.0 | 72.2 |
| | 48 | 59.2 | 75.0 |
| | 42 | 66.3 | 75.0 |
| | 39 | 71.3 | 75.0 |
| | 36 | 75.0 | 75.0 |
| 84 | 60 | 59.3 | 75.0 |
| | 54 | 63.3 | 75.0 |
| | 48 | 69.0 | 75.0 |
| | 42 | 75.0 | 75.0 |
| 78 | 66 | 68.1 | 75.0 |
| | 54 | 70.9 | 75.0 |
| | 48 | 75.0 | 75.0 |
| 72 | 66 | 75.0 | 75.0 |

NON-REINFORCE ASTRIGAL SPAN MAY NOT EXCEED 96".

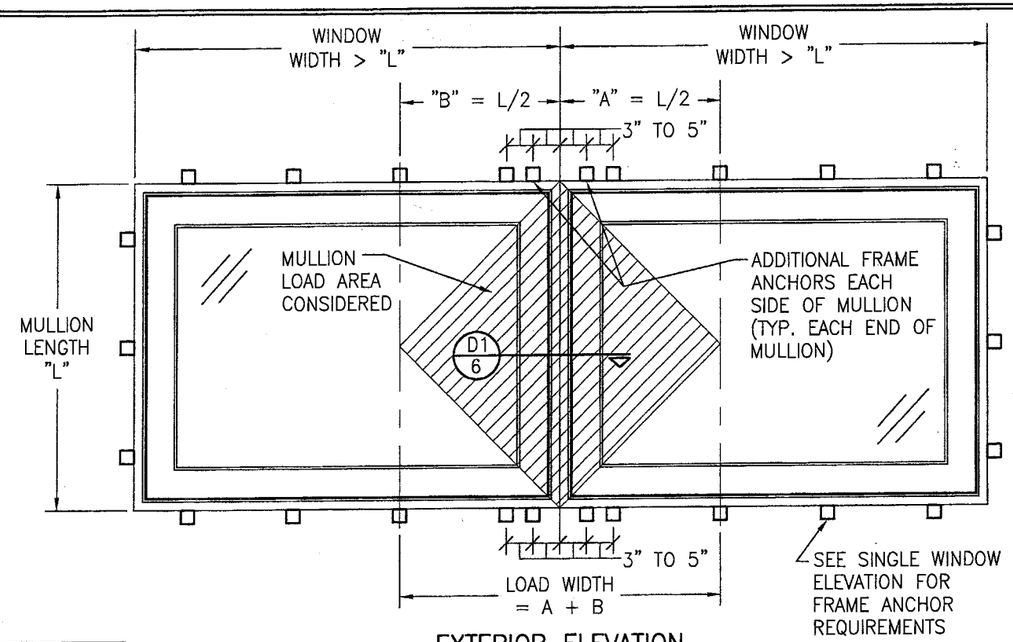


## EXTERIOR ELEVATION
## FIXED WINDOW MULLED TO FIXED WINDOW WITH NON-REINFORCED MULLION WHEN WINDOW WIDTHS ARE GREATER THAN THE MULLION LENGTH
## (SEE MULLION LOAD TABLE)

(MULTIPLE UNIT NOTES ON SHEET 3 SHALL APPLY)
SEE SINGLE WINDOW ELEVATION FOR WINDOW DETAIL NOT SHOWN

## MULLION ALLOWABLE LOAD TABLE

| MAXIMUM MULLION SPAN (IN.) | MAXIMUM LOAD WIDTH (IN.) | ALLOWABLE PRESSURE (POS. & NEG. PSF) | |
|---|---|---|---|
| | | NON-REINFORCED MULLION | REINFORCED MULLION |
| 132 | 39 | N/A | 75.0 |
| 120 | 42 | N/A | 75.0 |
| 108 | 48 | N/A | 75.0 |
| 96 | 54 | 53.2 | 75.0 |
| | 48 | 58.6 | 75.0 |
| | 42 | 65.5 | 75.0 |
| | 39 | 70.0 | 75.0 |
| | 36 | 75.0 | 75.0 |
| 90 | 54 | 61.3 | 75.0 |
| | 48 | 65.9 | 75.0 |
| | 42 | 72.1 | 75.0 |
| | 39 | 75.0 | 75.0 |
| 84 | 60 | 64.5 | 75.0 |
| | 54 | 67.9 | 75.0 |
| | 48 | 72.5 | 75.0 |
| | 42 | 75.0 | 75.0 |
| 78 | 66 | 70.3 | 75.0 |
| | 60 | 72.5 | 75.0 |
| | 54 | 75.0 | 75.0 |
| 72 | 66 | 75.0 | 75.0 |

LESSER OF THE PRESSURE SHOWN IN THIS TABLE & THAT ALLOWED FOR THE INDIVIDUAL WINDOW SHALL CONTROL AS ALLOWABLE FOR THE OVERALL UNIT.

NON-REINFORCE MULLION SPAN MAY NOT EXCEED 96".

Approved as complying with the Florida Building Code
Date 06/18/05
NOA# 05-0622.04
Miami-Dade Product Control Division
By

| DRAWN BY: S.T.R. | CHECKED BY: W.W.S. |
|---|---|
| PLOT: 1=16 | DATE: 3/15/05 |

| NO. | REVISION DESCRIPTION | BY | DATE |
|---|---|---|---|
| | | | |

DRAWING TITLE
AMERICAN OUT-SWING FIXED CASEMENT IMPACT WOOD WINDOWS

MANUFACTURER
PEETZ WINDOWS & DOORS
5783 S.W. 40TH STREET, PMB 220
MIAMI, FL 33155
305-665-0291

CONSULTANTS
W. W. SCHAEFER ENGINEERING & CONSULTING, P.A.
8895 N. MILITARY TRAIL; SUITE C-204
PALM BEACH GARDENS, FL 33410
PHONE: 561-775-4902 FAX: 561-775-4903

CERTIFICATION
JUL 14 2005
WARREN W. SCHAEFER, P.E.
P.E. NO. 44135

DRAWING NO. 1322
REV.
SHEET NO. 2 OF 7

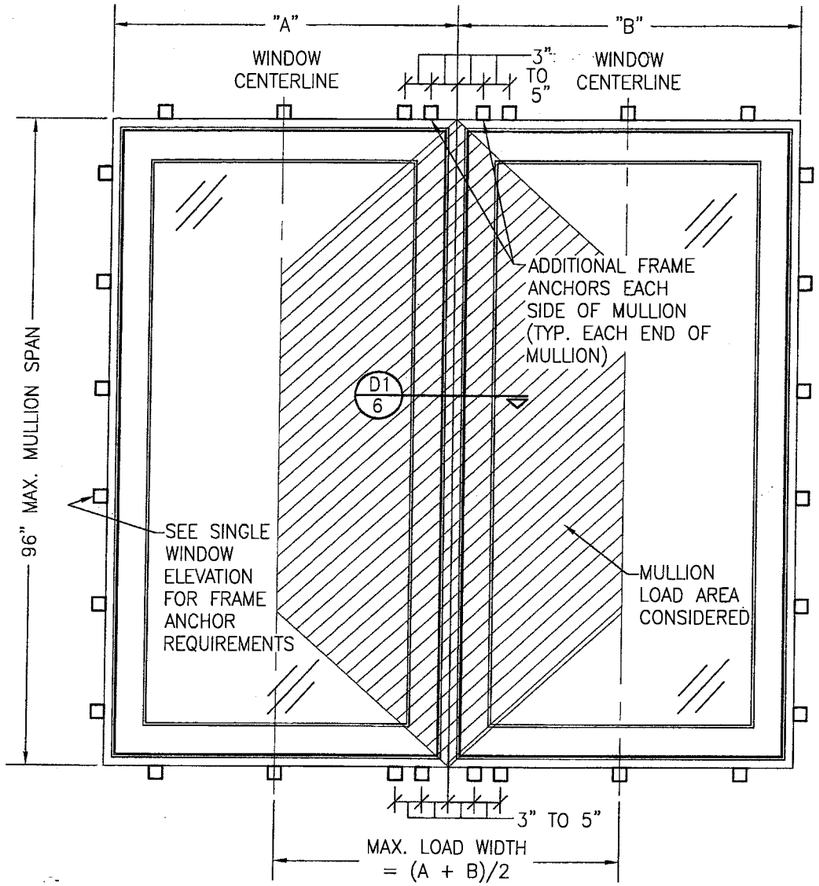


EXTERIOR ELEVATION
FIXED WINDOW MULLED TO FIXED WINDOW WITH NON-REINFORCED MULLION WHEN WINDOW WIDTHS ARE LESS THAN OR EQUAL TO THE MULLION LENGTH
(SEE MULLION LOAD TABLE)

SEE SINGLE WINDOW ELEVATION FOR WINDOW DETAIL NOT SHOWN

## MULTIPLE UNIT NOTES:

1. ALL WINDOWS ARE RESTRICTED BY THE DIMENSIONS SPECIFIED.
2. THE MAXIMUM ALLOWABLE PRESSURE FOR A COMBINED UNIT IS RESTRICTED BY THE LESSER OF THE INDIVIDUAL WINDOW ALLOWABLE PRESSURE OR THE ALLOWABLE MULLION PRESSURE. SEE LOAD TABLES ON SHEET 2.
3. WINDOWS MAY BE STACKED HORIZONTAL OR VERTICAL. (IF VERTICALLY STACKED, MANUFACTURER MUST INSURE THAT THE DEAD WEIGHT OF THE WINDOWS DOES NOT CAUSE ANY WINDOW FAILURES OR DEFORMATIONS)

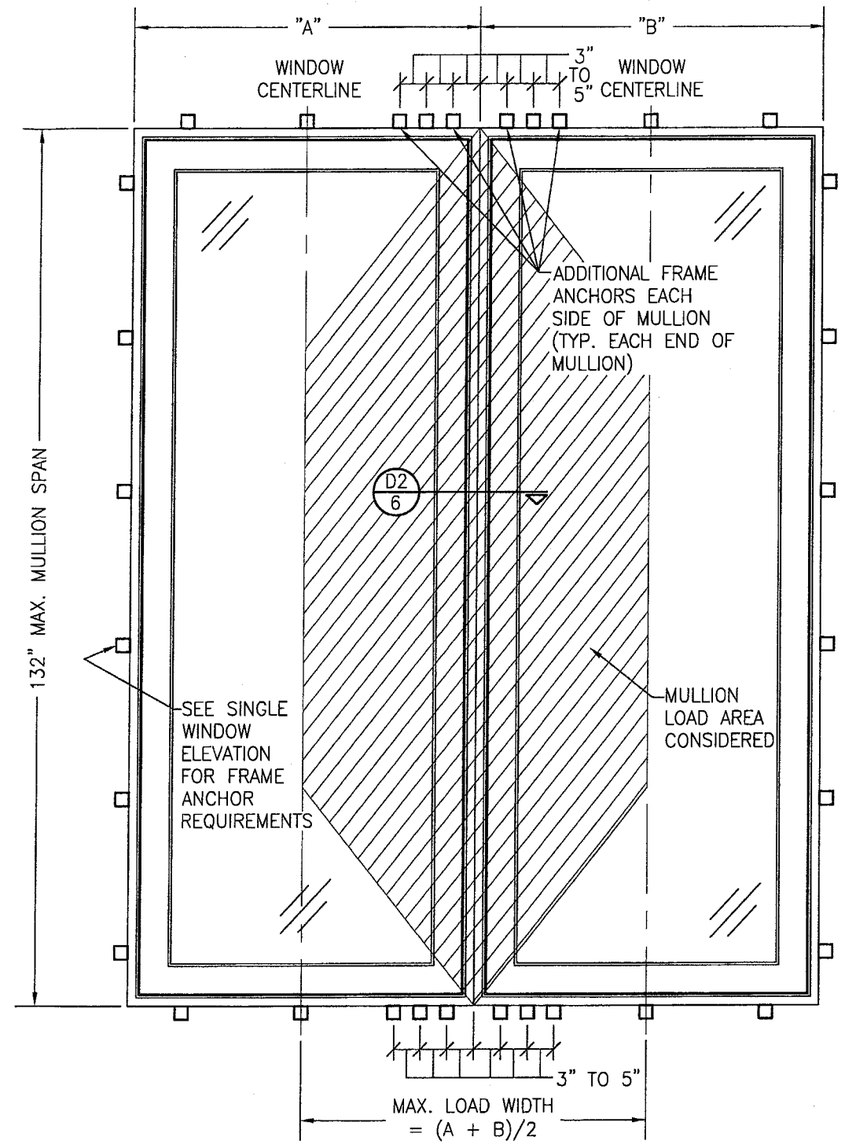


EXTERIOR ELEVATION
FIXED WINDOW MULLED TO FIXED WINDOW WITH REINFORCED MULLION
(SEE MULLION LOAD TABLE)

SEE SINGLE WINDOW ELEVATION FOR WINDOW DETAIL NOT SHOWN

Approved as complying with the Florida Building Code
Date 08/18/05
NOA# 05-0622.04
Miami-Dade Product Control Division
By

| DRAWN BY: S.T.R. | CHECKED BY: W.W.S. |
|---|---|
| PLOT: 1=16 | DATE: 3/15/05 |

| NO. | REVISION DESCRIPTION | BY | DATE |
|---|---|---|---|
| | | | |

DRAWING TITLE
AMERICAN OUT-SWING FIXED CASEMENT IMPACT WOOD WINDOWS

MANUFACTURER
PEETZ WINDOWS & DOORS
5783 S.W. 40TH STREET, PMB 220
MIAMI, FL 33155
305-665-0291

CONSULTANTS
W. W. SCHAEFER ENGINEERING & CONSULTING, P.A.
8895 N. MILITARY TRAIL; SUITE C-204
PALM BEACH GARDENS, FL 33410
PHONE: 561-775-4902 FAX: 561-775-4903

CERTIFICATION
JUL 14 2005
WARREN W. SCHAEFER, P.E.
P.E. NO. 44135

DRAWING NO. 1322
REV.
SHEET NO. 3 OF 7

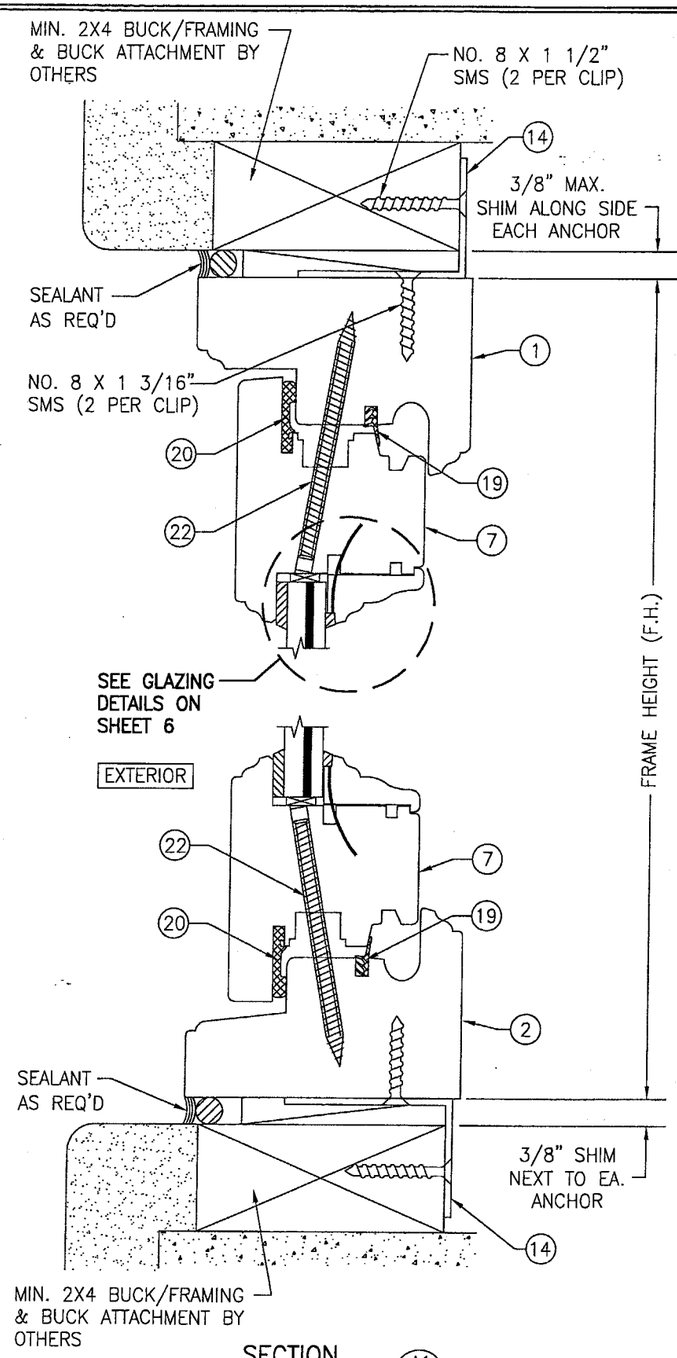


SECTION A1/4
SCALE: 1/2 FULL
(CLIP MOUNT)

CLIPS & BRACKETS MAY BE POSITIONED AT THE INTERIOR OR EXTERIOR SIDE OF THE WINDOW

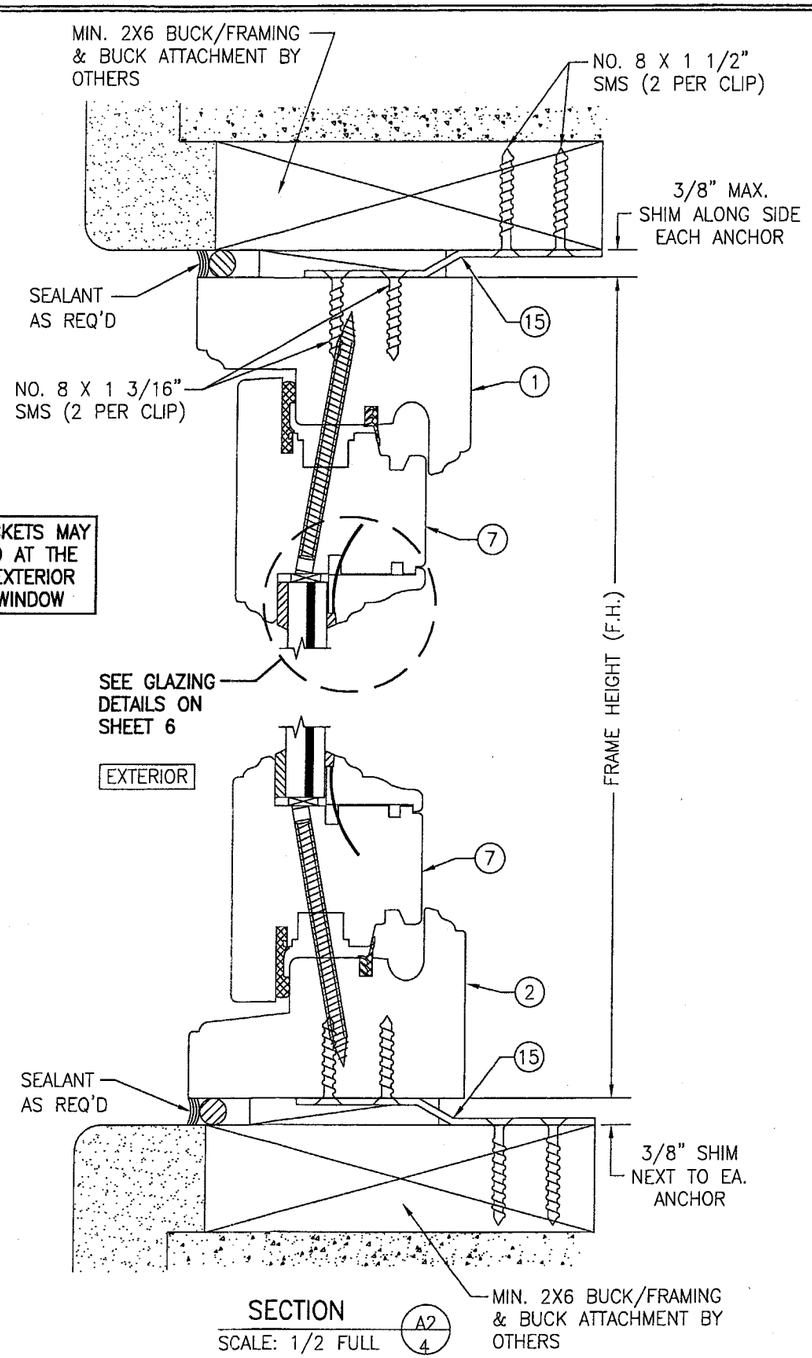


SECTION A2/4
SCALE: 1/2 FULL

(SEE DETAIL A1/4 FOR DETAILS NOT SHOWN)
(BRACKET MOUNT)

BUCK CONDITION SHOWN. METAL STUD OR STRUCTURAL STEEL SUBSTRATES ALSO APPLY IN LIEU OF BUCKS PER FRAME ANCHOR REQUIREMENTS TABLE ON SHEET 1

Approved as complying with the Florida Building Code
Date 08/18/05
NOA# 05-0622.04
Miami-Dade Product Control Division
By

| DRAWN BY: S.T.R. | CHECKED BY: WWS |
|---|---|
| PLOT: 1=2 | DATE: 3/15/05 |

| NO. | REVISION DESCRIPTION | BY | DATE |
|---|---|---|---|
| | | | |

DRAWING TITLE
AMERICAN OUT-SWING FIXED CASEMENT IMPACT WOOD WINDOWS

MANUFACTURER
PEETZ WINDOWS & DOORS
5783 S.W. 40TH STREET, PMB 220
MIAMI, FL 33155
305-665-0291

CONSULTANTS
W. W. SCHAEFER ENGINEERING & CONSULTING, P.A.
8895 N. MILITARY TRAIL; SUITE C-204
PALM BEACH GARDENS, FL 33410
PHONE: 561-775-4902 FAX: 561-775-4903

CERTIFICATION
JUL 14 2005
WARREN W. SCHAEFER, P.E.
P.E. NO. 44135

DRAWING NO. 1322
REV.
SHEET NO. 4 OF 7

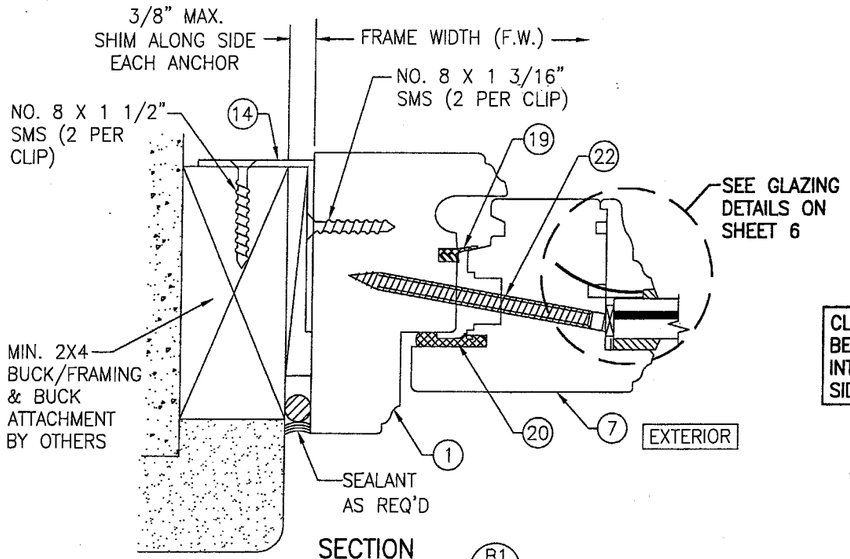


SECTION B1/5
SCALE: 1/2 FULL
(CLIP MOUNT)

CLIPS & BRACKETS MAY BE POSITIONED AT THE INTERIOR OR EXTERIOR SIDE OF THE WINDOW

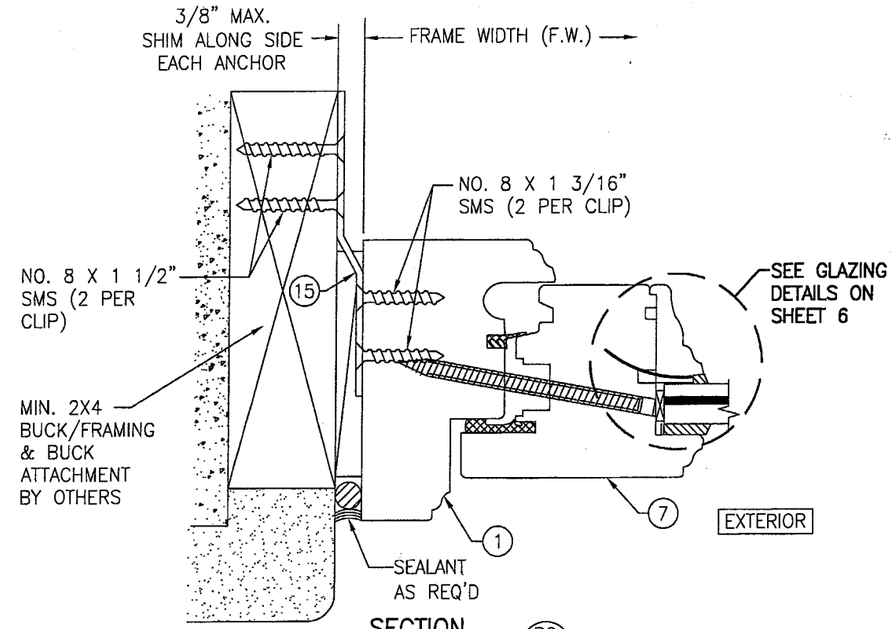


SECTION B2/5
SCALE: 1/2 FULL
(BRACKET MOUNT)
(SEE DETAIL B1/5 FOR DETAILS NOT SHOWN)

BUCK CONDITION SHOWN. METAL STUD OR STRUCTURAL STEEL SUBSTRATES ALSO APPLY IN LIEU OF BUCKS PER FRAME ANCHOR REQUIREMENTS TABLE ON SHEET 1

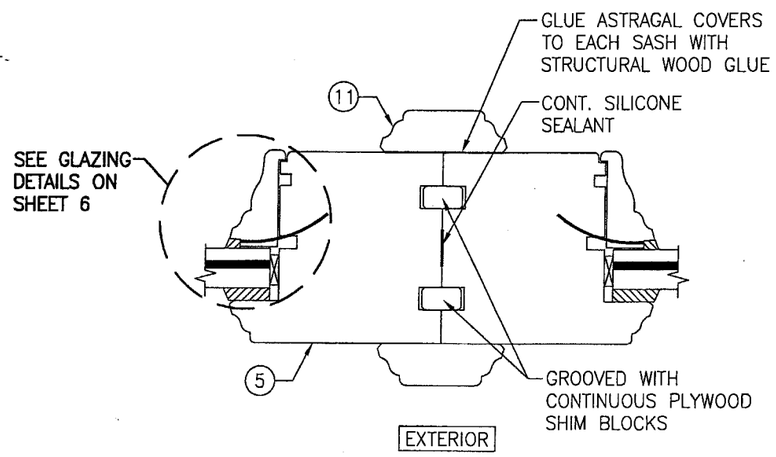


SECTION C1/5
SCALE: 1/2 FULL

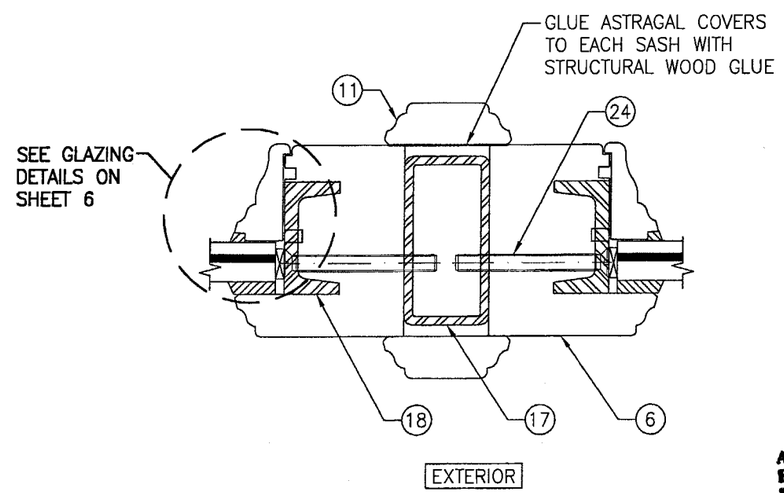


SECTION C2/5
SCALE: 1/2 FULL

Approved as complying with the Florida Building Code
Date 08/18/05
NOA# 05-0622.04
Miami-Dade Product Control Division
By

| DRAWN BY: S.T.R. | CHECKED BY: WWS |
|---|---|
| PLOT: 1=2 | DATE: 3/15/05 |

| NO. | REVISION DESCRIPTION | BY | DATE |
|---|---|---|---|
| | | | |

DRAWING TITLE
AMERICAN OUT-SWING FIXED CASEMENT IMPACT WOOD WINDOWS

MANUFACTURER
PEETZ WINDOWS & DOORS
5783 S.W. 40TH STREET; PMB 220
MIAMI, FL 33155
305-665-0291

CONSULTANTS
W. W. SCHAEFER ENGINEERING & CONSULTING, P.A.
8895 N. MILITARY TRAIL; SUITE C-204
PALM BEACH GARDENS, FL 33410
PHONE: 561-775-4902 FAX: 561-775-4903

CERTIFICATION
JUL 14 2005
WARREN W. SCHAEFER, P.E.
P.E. NO. 44135

DRAWING NO. 1322
REV.
SHEET NO. 5 OF 7

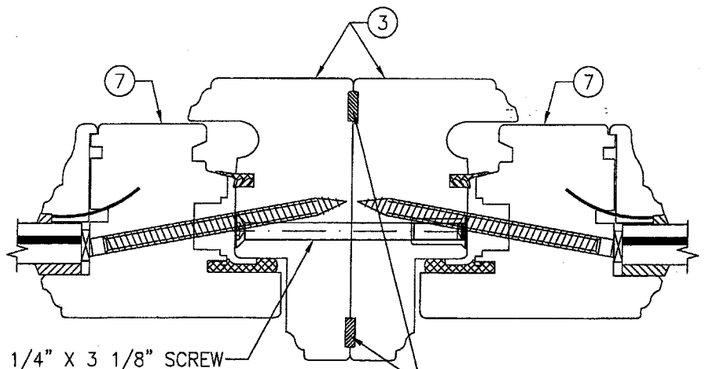


SECTION D1/6
SCALE: 1/2 FULL

(SEE SECTION B1/5 FOR DETAILS NOT SHOWN)

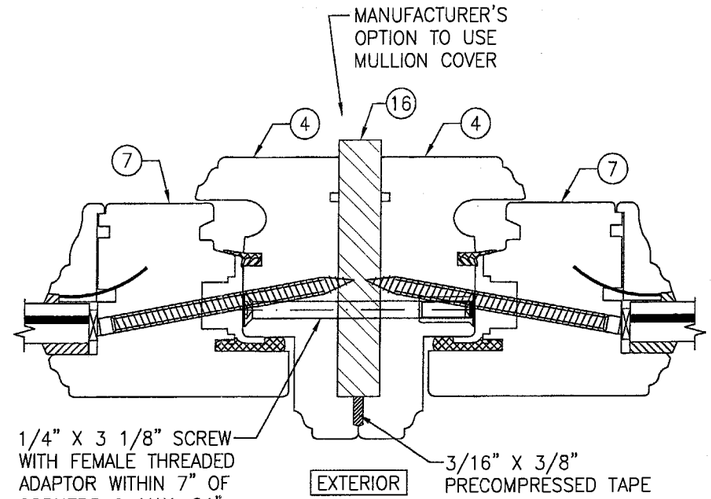


SECTION D2/6
SCALE: 1/2 FULL

(SEE SECTION B1/5 FOR DETAILS NOT SHOWN)

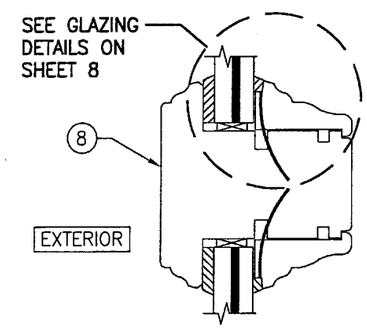


SECTION E/6
SCALE: 1/2 FULL

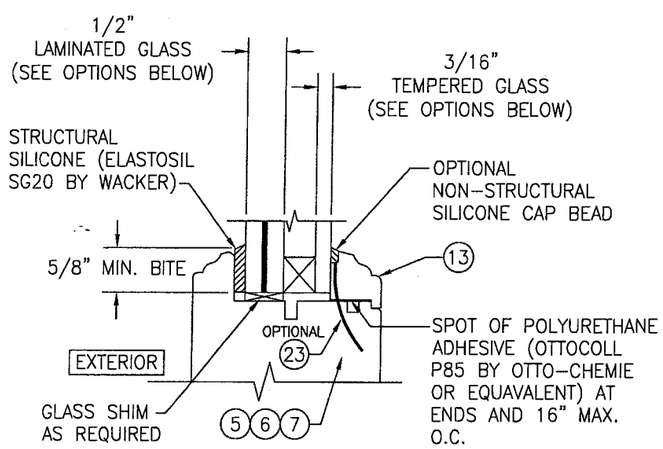


## I.G. GLAZING DETAIL

GLASS OPTION:
1. 1/2" THICK SOLUTIA SAFLEX III LAMINATED OUTER GLASS (3/16" AN/0.09 SAFLEX IIIG PVB/1/4" AN); 3/16" TEMPERED SINGLE PANE INNER GLASS & 1/2" AIR SPACE
2. 1/2" THICK SOLUTIA VANCEVA LAMINATED OUTER GLASS (3/16" AN/0.075" VANCEVA/1/4" AN); 3/16" TEMPERED SINGLE PANE INNER GLASS & 1/2" AIR SPACE

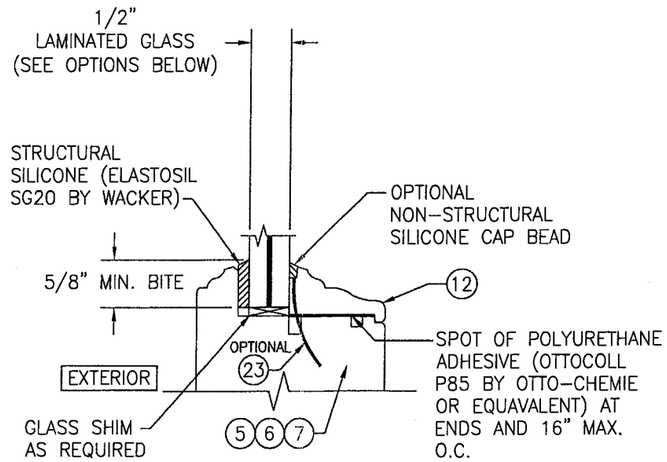


## NON-I.G. GLAZING DETAIL

GLASS OPTION:
1. 1/2" THICK SOLUTIA SAFLEX III LAMINATED GLASS (3/16" AN/0.09 SAFLEX IIIG PVB/1/4" AN)
2. 1/2" THICK SOLUTIA VANCEVA LAMINATED GLASS (3/16" AN/0.075" VANCEVA/1/4" AN)

Approved as complying with the Florida Building Code
Date 08/18/05
NOA# 05-0622.04
Miami-Dade Product Control Division
By

| DRAWN BY: S.T.R. | CHECKED BY: W.W.S. |
|---|---|
| PLOT: 1=2 | DATE: 3/15/05 |

| NO. | REVISION DESCRIPTION | BY | DATE |
|---|---|---|---|
| | | | |

DRAWING TITLE
AMERICAN OUT-SWING FIXED CASEMENT IMPACT WOOD WINDOWS

MANUFACTURER
PEETZ WINDOWS & DOORS
5783 S.W. 40TH STREET; PMB 220
MIAMI, FL 33155
305-665-0291

CONSULTANTS
W. W. SCHAEFER ENGINEERING & CONSULTING, P.A.
8895 N. MILITARY TRAIL; SUITE C-204
PALM BEACH GARDENS, FL 33410
PHONE: 561-775-4902 FAX: 561-775-4903

CERTIFICATION
JUL 14 2005
WARREN W. SCHAEFER, P.E. NO. 44135

DRAWING NO. 1322
REV.
SHEET NO. 6 OF 7

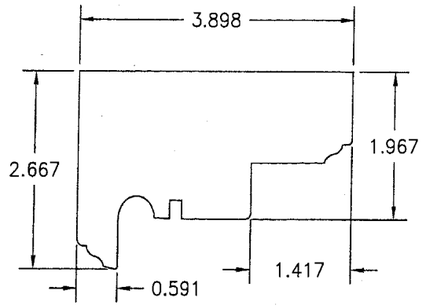


1 HEAD AND SIDE JAMB

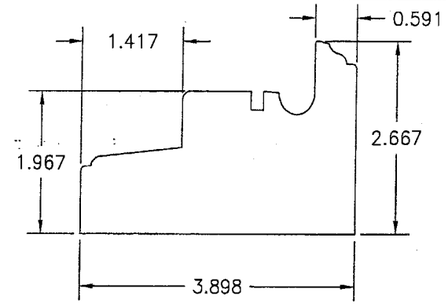


2 SILL JAMB

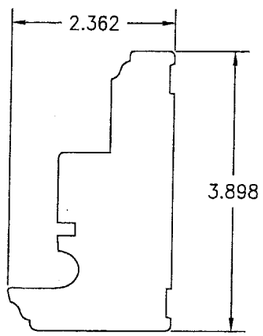


3 NON-REINFORCED MULLION JAMB

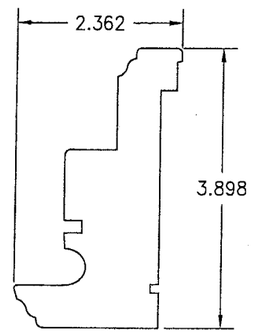


4 REINFORCED MULLION JAMB

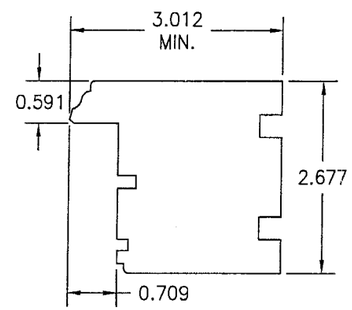


5 MEETING STYLE/ASTRAGAL
(NON-REINFORCED ASTRAGAL)

| ITEM # | ITEM DESCRIPTION | MANUFACTURER/NOTES |
|---|---|---|
| | PARTS | |
| 1 | HEAD AND SIDE JAMB | MAHOGANY |
| 2 | SILL JAMB | MAHOGANY |
| 3 | NON-REINFORCED MULLION JAMB | MAHOGANY |
| 4 | REINFORCED MULLION JAMB | MAHOGANY |
| 5 | MEETING STYLE/ASTRAGAL | MAHOGANY |
| 6 | MEETING STYLE/ASTRAGAL | MAHOGANY |
| 7 | SASH | MAHOGANY |
| 8 | MID RAIL | MAHOGANY |
| 11 | ASTRAGAL COVER | MAHOGANY |
| 12 | NON-I.G. GLAZING BEAD | MAHOGANY |
| 13 | I.G. GLAZING BEAD | MAHOGANY |
| 14 | FRAME INSTALLATION CLIP | GALVANIZED 34.1 KSI STEEL |
| 15 | FRAME INSTALLATION BRACKET | GALVANIZED 34.1 KSI STEEL |
| 16 | MULLION REINFORCEMENT | A36 STEEL (FY = 36 KSI) |
| 17 | ASTRAGAL REINFORCEMENT | 36 KSI STEEL TUBE WITH 2" END SET BACK |
| 18 | MEETING STILE REINFORCEMENT | 36 KSI STEEL CHANNEL |
| | SEALS AND SEALANTS | |
| 19 | SWEEP | GTG EPDM |
| 20 | COMPRESSION SEAL | SCHLEGEL |
| | FASTENERS | |
| 22 | .295" X 3 5/8" AMO III GALVANIZED STEEL SCREWS | 5 1/2" FROM INTERIOR CORNERS & 14" O.C. (AT ASTRAGAL ENDS, PLACE ADDITIONAL SCREW 8 1/2" OFF CORNER @ HEAD & SILL |
| 23 | OPTIONAL 18 GA. X 1 1/4" GALVANIZED CURVED NAIL | 10" FROM CORNERS & 20" O.C. (NOT APPLICABLE WHEN PART 18 IS USED W/ SASH) |
| 24 | 1/4" X 2 3/16" SCREW | WITHIN 6" OF INTERIOR CORNER & MAX. 14" O.C. |

NOTE: MAHOGANY USED IN TESTING WAS MERANTI MAHOGANY. OTHER WOOD SPECIES APPLICABLE FOR USE WITH THIS PRODUCT ARE MERBAU, DOUSSIE, SIPO, SAPELLI, HONDURAS MAHOGANY OR OAK. ALL WOOD IS MINIMUM GRADE 2 MILLED BY PEETZ TO SELECT.

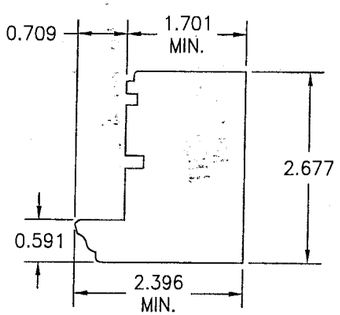


6 MEETING STYLE/ASTRAGAL
(REINFORCED ASTRAGAL)

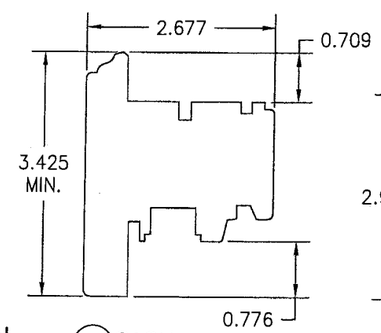


7 SASH

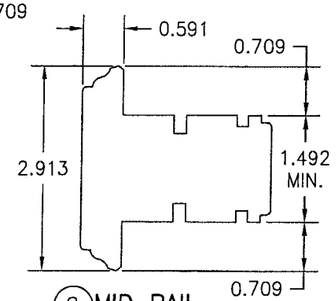


8 MID RAIL

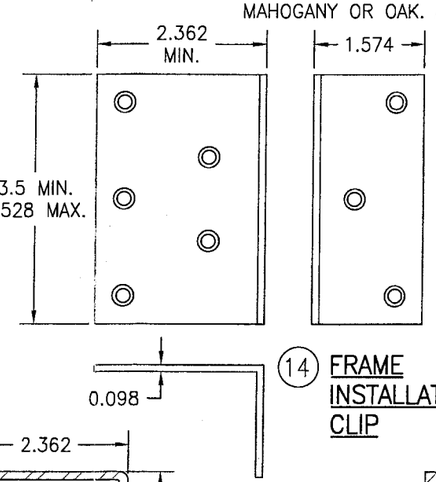





14 FRAME INSTALLATION CLIP

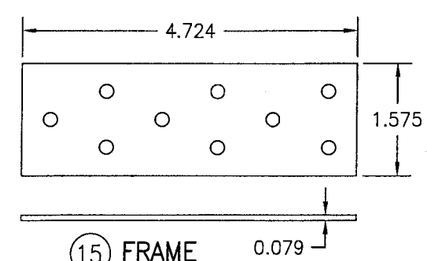


15 FRAME INSTALLATION BRACKET

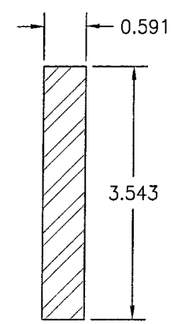


16 MULLION REINFORCEMENT

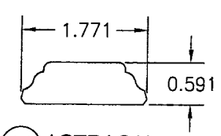


11 ASTRAGAL COVER

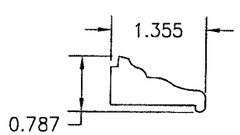


12 NON-I.G. GLAZING BEAD

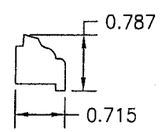


13 I.G. GLAZING BEAD

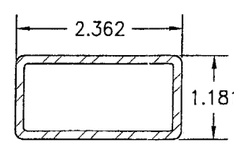


17 ASTRAGAL REINFORCEMENT

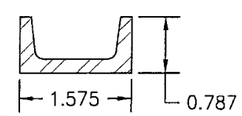


18 MEETING STILE REINFORCEMENT

Approved as complying with the Florida Building Code.
Date 08/18/05
NOAF 05-0622.04
Miami-Dade Product Control Division
By

| DRAWN BY: S.T.R. | CHECKED BY: W.W.S. |
|---|---|
| PLOT: 1=2 | DATE: 3/15/05 |

| NO. | REVISION DESCRIPTION | BY | DATE |
|---|---|---|---|
| | | | |

DRAWING TITLE
AMERICAN OUT-SWING FIXED CASEMENT IMPACT WOOD WINDOWS

MANUFACTURER
PEETZ WINDOWS & DOORS
5783 S.W. 40TH STREET, PMB 220
MIAMI, FL 33155
305-665-0291

CONSULTANTS
W. W. SCHAEFER ENGINEERING & CONSULTING, P.A.
8895 N. MILITARY TRAIL; SUITE C-204
PALM BEACH GARDENS, FL 33410
PHONE: 561-775-4902 FAX: 561-775-4903

CERTIFICATION
JUL 14 2005
WARREN W. SCHAEFER, P.E.
P.E. NO. 44135

DRAWING NO. 1322
REV.
SHEET NO. 7 OF 7