MIAMI-DADE COUNTY

BUILDING CODE COMPLIANCE OFFICE (BCCO)
PRODUCT CONTROL DIVISION

MIAMI-DADE COUNTY, FLORIDA
METRO-DADE FLAGLER BUILDING
140 WEST FLAGLER STREET, SUITE 1603
MIAMI, FLORIDA 33130-1563
(305) 375-2901 FAX (305) 375-2908
www.buildingcodeonline.com

NOTICE OF ACCEPTANCE (NOA)

Peetz Windows and Doors, Inc.
5783 SW 40th Street PMB 220
Miami, FL 33155

SCOPE:

This NOA is being issued under the applicable rules and regulations governing the use of construction materials. The documentation submitted has been reviewed by Miami-Dade County Product Control Division and accepted by the Board of Rules and Appeals (BORA) to be used in Miami Dade County and other areas where allowed by the Authority Having Jurisdiction (AHJ).

This NOA shall not be valid after the expiration date stated below. The Miami-Dade County Product Control Division (In Miami Dade County) and/or the AHJ (in areas other than Miami Dade County) reserve the right to have this product or material tested for quality assurance purposes. If this product or material fails to perform in the accepted manner, the manufacturer will incur the expense of such testing and the AHJ may immediately revoke, modify, or suspend the use of such product or material within their jurisdiction. BORA reserves the right to revoke this acceptance, if it is determined by Miami-Dade County Product Control Division that this product or material fails to meet the requirements of the applicable building code.

This product is approved as described herein, and has been designed to comply with the Florida Building Code, including the High Velocity Hurricane Zone.

DESCRIPTION: American Inswing Wood Casement Windows –L.M.I.

APPROVAL DOCUMENT: Drawing No. **1320A**, titled "American In-Swing Casement Impact Wood Windows", sheets 1 through 10 of 10, dated 03/18/05, prepared by W.W. Schaeffer Engineering & Consulting, P.A, signed and sealed by Warren W. Schaefer, P.E., bearing the Miami-Dade County Product Control Approval stamp with the Notice of Acceptance number and approval date by the Miami-Dade County Product Control Division.

MISSILE IMPACT RATING: Large and Small Missile Impact

LABELING: Each unit shall bear a permanent label with the manufacturer's name or logo, city, state and following statement: "Miami-Dade County Product Control Approved", unless otherwise noted herein.

RENEWAL of this NOA shall be considered after a renewal application has been filed and there has been no change in the applicable building code negatively affecting the performance of this product.

TERMINATION of this NOA will occur after the expiration date or if there has been a revision or change in the materials, use, and/or manufacture of the product or process. Misuse of this NOA as an endorsement of any product, for sales, advertising or any other purposes shall automatically terminate this NOA. Failure to comply with any section of this NOA shall be cause for termination and removal of NOA.

ADVERTISEMENT: The NOA number preceded by the words Miami-Dade County, Florida, and followed by the expiration date may be displayed in advertising literature. If any portion of the NOA is displayed, then it shall be done in its entirety.

INSPECTION: A copy of this entire NOA shall be provided to the user by the manufacturer or its distributors and shall be available for inspection at the job site at the request of the Building Official.

This NOA consists of this page 1 and evidence pages E-1 and E-2, as well as approval document mentioned above.

The submitted documentation was reviewed by **Herminio F. Gonzalez, P.E., Director, BCCO**

PRODUCT CONTROL ACCEPTED 7/28/05

Peetz Windows and Doors, Inc.

NOTICE OF ACCEPTANCE: EVIDENCE SUBMITTED

A. DRAWINGS

1. Manufacturer's die drawings and sections.
2. Drawing No. **1320A**, titled "American In-Swing Casement Impact Wood Windows", sheets 1 through 10 of 10, dated 03/18/05, prepared by W.W. Schaeffer Engineering & Consulting, P.A, signed and sealed by Warren W. Schaefer, P.E.

B. TESTS

1. Test reports on 1) Air Infiltration Test, per FBC, TAS 202-94
   2) Uniform Static Air Pressure Test, Loading per FBC, TAS 202-94.
   3) Water Resistance Test, per FBC, TAS 202-94.
   4) Large Missile Impact Test per FBC, TAS 201-94
   5) Cyclic Wind Pressure Loading per FBC, TAS 203-94
   6) Forced Entry Test, per FBC 2411 3.2.1 and TAS 202-94

   along with the manufacturer's parts drawings, installation diagram and marked-up drawings of a inswing wood casement window prepared by Hurricane Test Laboratory, Inc. Test Report No. **HTL-0284-1018-04**, dated 06/03/05, signed and sealed by Vinu J. Abraham, P.E.
2. Test reports on 1) Air Infiltration Test, per FBC, TAS 202-94
   2) Uniform Static Air Pressure Test, Loading per FBC, TAS 202-94.
   3) Water Resistance Test, per FBC, TAS 202-94.
   4) Large Missile Impact Test per FBC, TAS 201-94
   5) Cyclic Wind Pressure Loading per FBC, TAS 203-94
   6) Forced Entry Test, per FBC 2411 3.2.1 and TAS 202-94

   along with the manufacturer's parts drawings, installation diagram and marked-up drawings of a inswing wood casement window prepared by Hurricane Test Laboratory, Inc. Test Report No. **HTL-0284-0115-05**, dated 06/03/05, signed and sealed by Vinu J. Abraham, P.E.
3. Test reports on 1) Air Infiltration Test, per FBC, TAS 202-94
   2) Uniform Static Air Pressure Test, Loading per FBC, TAS 202-94.
   3) Water Resistance Test, per FBC, TAS 202-94.
   4) Large Missile Impact Test per FBC, TAS 201-94
   5) Cyclic Wind Pressure Loading per FBC, TAS 203-94

   along with the manufacturer's parts drawings, installation diagram and marked-up drawings of a inswing wood casement window prepared by Hurricane Test Laboratory, Inc. Test Report No. **HTL-0284-0116-05**, dated 06/03/05, signed and sealed by Vinu J. Abraham, P.E.

for M Thall

Herminio F. Gonzalez, P.E.
Director, Building Code Compliance Office
NOA No 05-0622.07
Expiration Date: August 18, 2010
Approval Date: August 18, 2005

Peetz Windows and Doors, Inc.

NOTICE OF ACCEPTANCE: EVIDENCE SUBMITTED

C. CALCULATIONS

1. Anchor calculations and structural analysis, dated 04/12/05, prepared by W.W. Schaeffer Engineering & Consulting, P.A., signed and sealed by Warren Schaeffer, P.E.

D. QUALITY ASSURANCE

1. Miami Dade Building Code Compliance Office (BCCO).

E. MATERIAL CERTIFICATIONS

1. Notice of Acceptance No. **01-0205.02** issued to Solutia Inc. for their "Saflex /Keepsafe Maximum" dated 05/17/01, expiring on 05/21/06.
2. Notice of Acceptance No. **03-0415.13** issued to Solutia Inc. for their "Vanceva Composites" dated 12/11/03, expiring on 12/11/08.

F. STATEMENTS

1. Statement letter of conformance and no financial interest, dated June 10, 2005, signed and sealed by Warren Schaeffer, P.E.

G. OTHER

1. Letter from consultant stating that the product is in compliance with the Florida Building Code (FBC).

for M Thall

Herminio F. Gonzalez, P.E.
Director, Building Code Compliance Office
NOA No 05-0622.07
Expiration Date: August 18, 2010
Approval Date: August 18, 2005

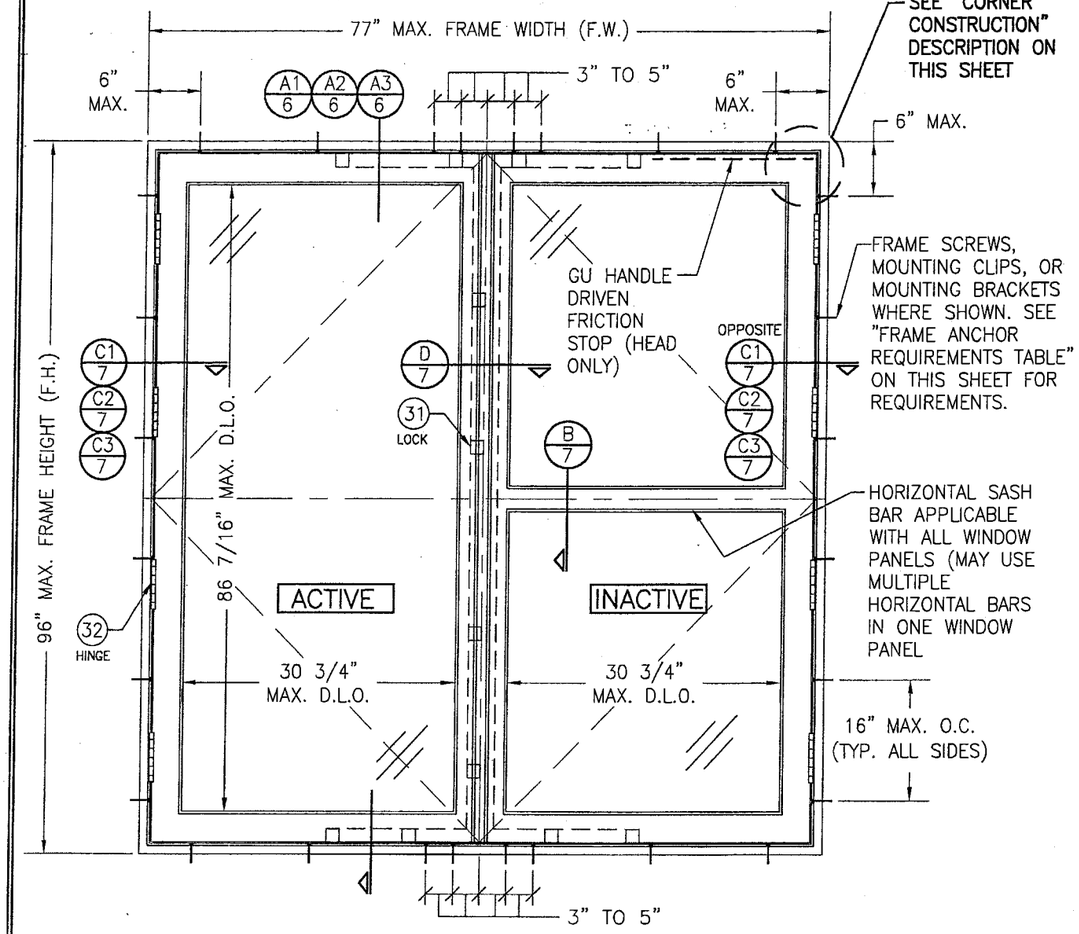

INTERIOR ELEVATION
DOUBLE RECTANGULAR HINGED WINDOW UNIT
(FOR TILT–TURN CONDITION, SEE ELEVATION ON SHEET 5)
SCALE: N.T.S.

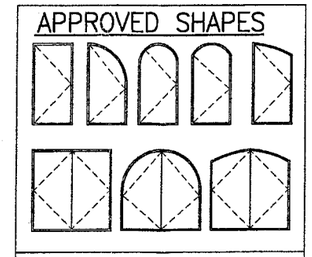

NOTES:
1. OTHER SHAPES MAY APPLY PROVIDING THEY ARE SIMILAR TO THOSE SHOWN & HAVE CORNER CONSTRUCTION AS DESCRIBED ON THIS SHEET.
2. ALL SHAPED UNITS MUST FIT INSCRIBED INTO THE ALLOWABLE RECTANGULAR UNITS & BE GOVERNED BY THE ALLOWABLE PRESSURE OF THE RESPECTIVE RECTANGULAR UNIT.

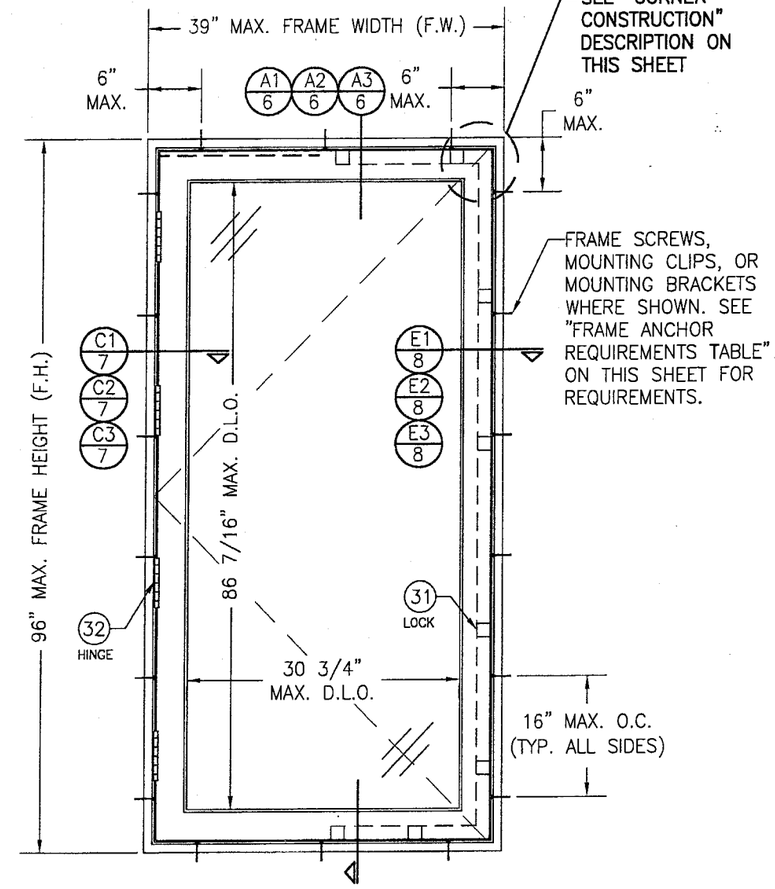

INTERIOR ELEVATION
SINGLE RECTANGULAR HINGED WINDOW UNIT
(FOR TILT–TURN CONDITION, SEE ELEVATION ON SHEET 5)
SCALE: N.T.S.

GENERAL NOTES

1. THESE WINDOW SYSTEMS HAVE BEEN TESTED, ANALYZED AND APPROVED FOR DESIGN PRESSURES NOT TO EXCEED THOSE SHOWN IN THE "ALLOWABLE DESIGN LOADS" TABLE(S).
2. BUCKING, OPENINGS & BUCKING FASTENERS MUST BE PROPERLY DESIGNED & INSTALLED TO TRANSFER WIND LOADS TO THE STRUCTURE.
3. ALL HARDWARE & FASTENERS SHALL BE IN ACCORDANCE WITH THESE DRAWINGS & MAY NOT VARY UNLESS SPECIFICALLY MENTIONED ON THE DRAWINGS.
4. THE DETAILS & SPECIFICATIONS SHOWN HEREIN REPRESENT THE PRODUCTS TESTED & PROPOSED FOR WATER, AIR, IMPACT, CYCLIC & UNIFORM STATIC AIR PRESSURE TESTING IN CONFORMANCE WITH THE 2004 FLORIDA BUILDING CODE PROTOCOLS TAS–201, 202 & 203 FOR LARGE MISSILE IMPACT WINDOWS.
5. THESE WINDOW SYSTEMS HAVE BEEN DESIGNED IN ACCORDANCE WITH THE 2004 FLORIDA BUILDING CODE (FBC) INCLUDING HIGH VELOCITY HURRICANE ZONES (HVHZ).
6. IMPACT SHUTTERS ARE NOT REQUIRED WITH THESE WINDOWS.
7. ALL ANCHORS SHALL BE INSTALLED AS SPECIFIED ON THESE DRAWINGS. SPECIFIED EMBEDMENT TO BASE MATERIAL SHALL BE BEYOND WALL FINISH OR STUCCO.
8. ALL FRAME ANCHORS SECURING WINDOW FRAME TO PRESSURE TREATED BUCKS OR WOOD FRAMING SHALL BE CAPABLE OF RESISTING CORROSION CAUSED BY THE PRESSURE TREATING CHEMICALS IN THE WOOD.

CORNER CONSTRUCTION:

JAMBS: COPED, BUTTED TOGETHER, JOINED WITH 3 NO. 10 X 3 1/8" SCREWS & GLUED WITH BINDAN D4 OR EQUAL.
SASH: MULTI–FORKED, BUTTED & GLUED WITH BINDAN D4 OR EQUAL.

FRAME ANCHOR REQUIREMENTS TABLE

OPENING TYPE (SUBSTRATE)	JAMB TO OPENING FASTENER TYPE	MINIMUM EMBED	MINIMUM EDGE DIST.
SHEAR SCREWS			
2X_ WOOD FRAME OR BUCK	NO. 14 SMS SCREW	1 1/4"	3/4"
CMU/CONCRETE	(1) 1/4" CONCRETE SCREW	1 1/4"	2"
MIN. 18 GA. 33 KSI METAL STUD OR 36 KSI STRUCTURAL STEEL	NO. 14 SELF TAPPING SCREWS	FULL	1/2"
MOUNTING CLIP SCREWS			
2X_ WOOD FRAME OR BUCK	NO. 8 X 1 1/2" SMS SCREWS	1 3/8"	1/2"
MIN. 1/8" THICK 36 KSI STEEL	NO. 8 SELF TAPPING SCREWS	FULL	1/2"
MOUNTING BRACKET SCREWS			
2X_ WOOD FRAME OR BUCK	NO. 8 X 1 1/2" SMS SCREWS	1 3/8"	1/2"
MIN. 18 GA. 33 KSI METAL STUD OR 36 KSI STRUCTURAL STEEL	NO. 8 SELF TAPPING SCREWS	FULL	1/2"

(1) CONCRETE SCREWS SHALL BE ELCO OR ITW RAMSET/RED HEAD TAPCONS OR HILTI KWIK–CON II (HARDENED STEEL OR S.S.).

ALLOWABLE DESIGN PRESSURE
(SINGLE, DOUBLE & TRANSOM MULLED WINDOWS)

+/– 70 PSF

FOR VERTICAL MULLION ALLOWABLE PRESSURE, SEE MULLION LOAD TABLE ON SHEET 4

Approved as complying with the Florida Building Code
Date 08/18/05
NOA# 05-0622.02
Miami-Dade Product Control Division
By M. Khan

DRAWN BY: S.T.R.	CHECKED BY: W.W.S.
PLOT: 1=16	DATE: 3/18/05

NO.	REVISION DESCRIPTION	BY	DATE

DRAWING TITLE
AMERICAN IN–SWING CASEMENT IMPACT WOOD WINDOWS

MANUFACTURER
PEETZ WINDOWS & DOORS
5783 S.W. 40TH STREET, PMB 220
MIAMI, FL 33155
305–665–0291

CONSULTANTS
W. W. SCHAEFER ENGINEERING & CONSULTING, P.A.
8895 N. MILITARY TRAIL; SUITE C–204
PALM BEACH GARDENS, FL 33410
PHONE: 561–775–4902 FAX: 561–775–4903

CERTIFICATION
JUL 14 2005
WARREN W. SCHAEFER, P.E.
P.E. NO. 44135

DRAWING NO. 1320A
REV.
SHEET NO. 1 OF 10

Approved as complying with the Florida Building Code
Date 08/18/05
NOA# 05-0622.03
Miami-Dade Product Control Division
By

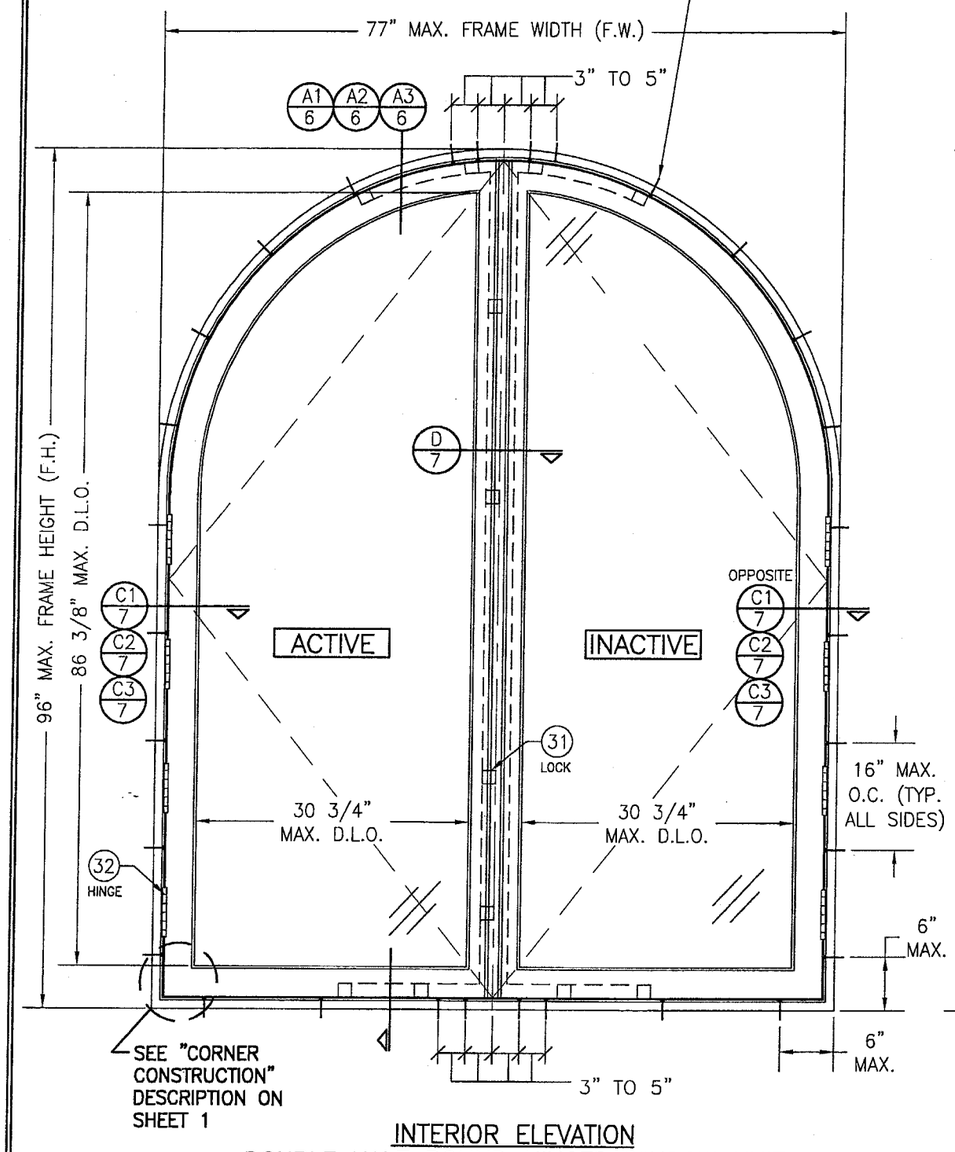

INTERIOR ELEVATION
DOUBLE HALF ROUND HINGED WINDOW UNIT
(FOR TILT-TURN CONDITION, SEE ELEVATION ON SHEET 5)
SCALE: 3/4" = 1'-0"
(OTHER SHAPES APPLY. SEE SHAPES TABLE ON SHEET 1)

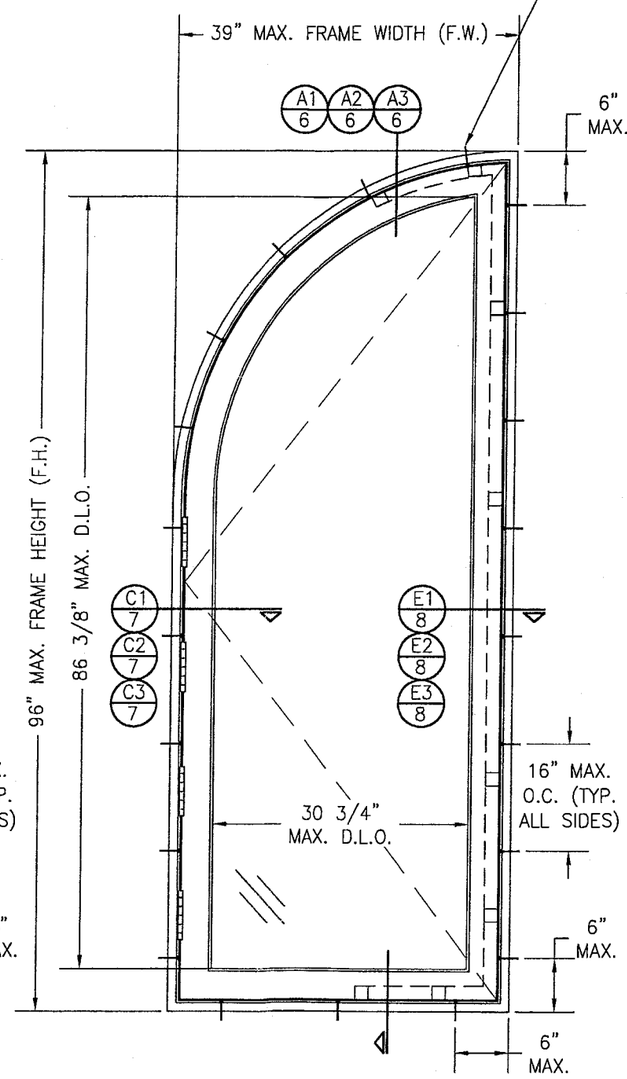

INTERIOR ELEVATION
SINGLE QUARTER ROUND HINGED WINDOW UNIT
(FOR TILT-TURN CONDITION, SEE ELEVATION ON SHEET 5)
SCALE: 3/4" = 1'-0"
(OTHER SHAPES APPLY. SEE SHAPES TABLE ON SHEET 1)

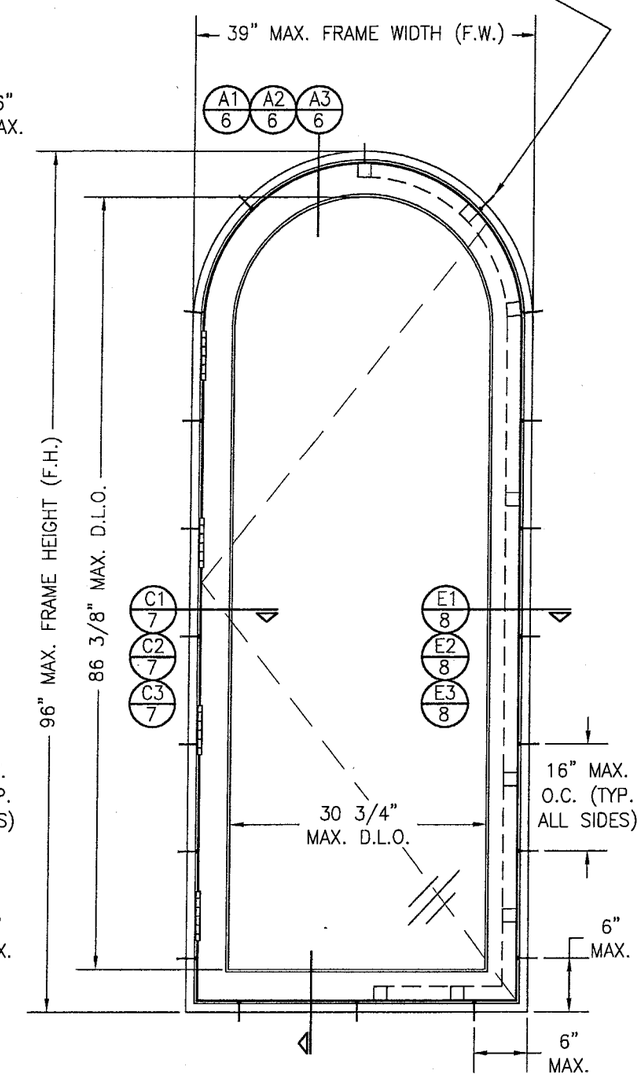

INTERIOR ELEVATION
SINGLE HALF ROUND HINGED WINDOW UNIT
(FOR TILT-TURN CONDITION, SEE ELEVATION ON SHEET 5)
SCALE: 3/4" = 1'-0"
(OTHER SHAPES APPLY. SEE SHAPES TABLE ON SHEET 1)

DRAWN BY: S.T.R.	CHECKED BY: W.W.S.
PLOT: 1=16	DATE: 3/18/05

NO.	REVISION DESCRIPTION	BY	DATE

DRAWING TITLE
AMERICAN IN-SWING CASEMENT IMPACT WOOD WINDOWS

MANUFACTURER
PEETZ WINDOWS & DOORS
5783 S.W. 40TH STREET; PMB 220
MIAMI, FL 33155
305-665-0291

CONSULTANTS
W. W. SCHAEFER ENGINEERING & CONSULTING, P.A.
8895 N. MILITARY TRAIL; SUITE C-204
PALM BEACH GARDENS, FL 33410
PHONE: 561-775-4902 FAX: 561-775-4903

CERTIFICATION
JUL 14 2005
WARREN W. SCHAEFER, P.E.
P.E. NO. 44135

DRAWING NO. 1320A
REV.
SHEET NO. 2 OF 10

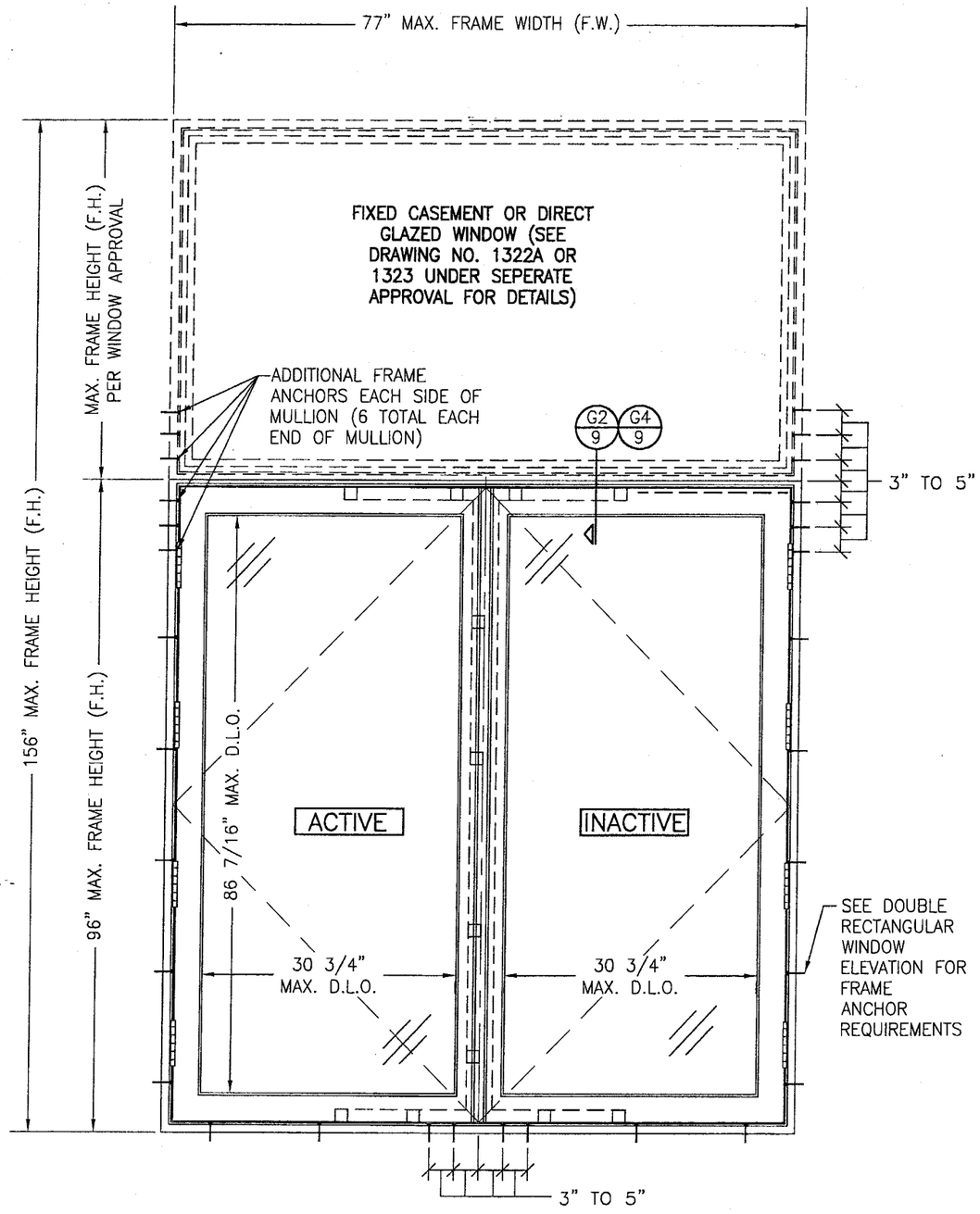

INTERIOR ELEVATION
DOUBLE WINDOW UNIT WITH TRANSOM
(HINGED WINDOW SHOWN. TILT-TURN ALSO APPLIES)
SCALE: N.T.S.
SEE DOUBLE RECTANGULAR WINDOW ELEVATION FOR WINDOW DETAIL NOT SHOWN

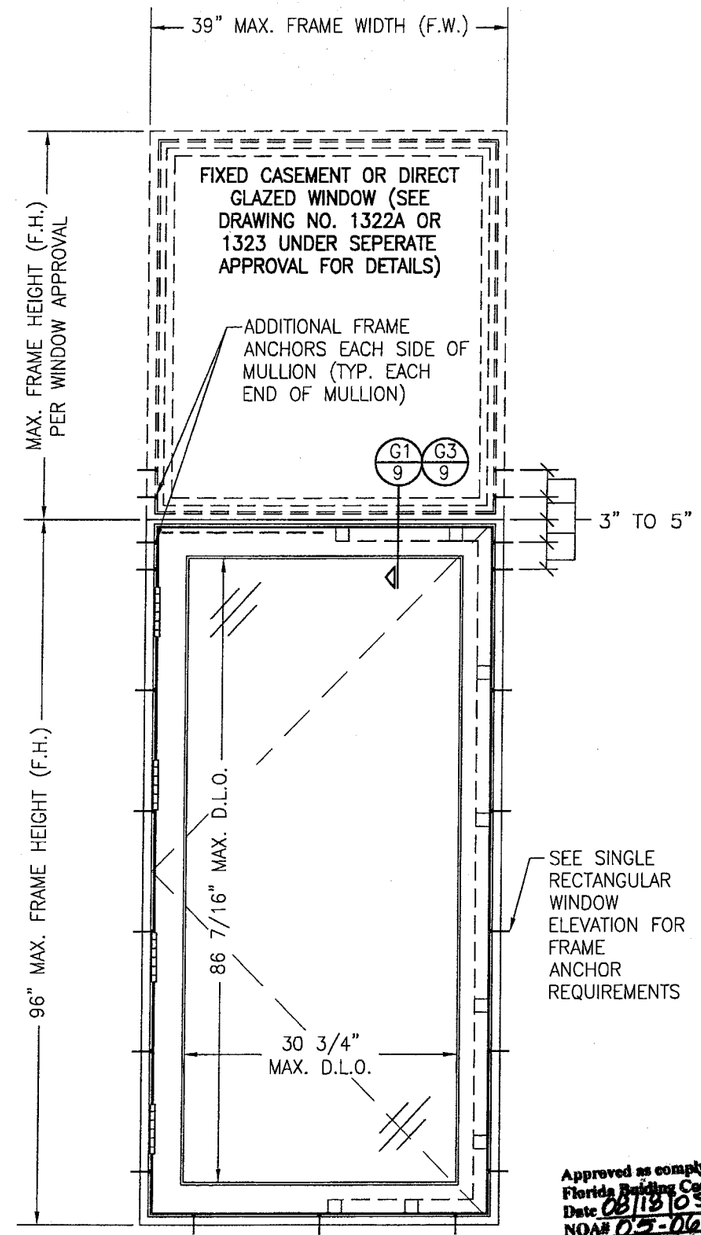

Approved as complying with the Florida Building Code
Date 08/18/05
NOA# 05-0622.07
Miami-Dade Product Control Division
By

INTERIOR ELEVATION
SINGLE WINDOW UNIT WITH TRANSOM
(HINGED WINDOW SHOWN. TILT-TURN ALSO APPLIES)
SCALE: N.T.S.
SEE SINGLE RECTANGULAR WINDOW ELEVATION FOR WINDOW DETAIL NOT SHOWN

DRAWN BY: S.T.R.	CHECKED BY: W.W.S.
PLOT: 1=16	DATE: 3/18/05

NO.	REVISION DESCRIPTION	BY	DATE

DRAWING TITLE
AMERICAN IN-SWING CASEMENT IMPACT WOOD WINDOWS

MANUFACTURER
PEETZ WINDOWS & DOORS
5783 S.W. 40TH STREET, PMB 220
MIAMI, FL 33155
305-665-0291

CONSULTANTS
W. W. SCHAEFER ENGINEERING & CONSULTING, P.A.
8895 N. MILITARY TRAIL, SUITE C-204
PALM BEACH GARDENS, FL 33410
PHONE: 561-775-4902 FAX: 561-775-4903

CERTIFICATION
JUL 4 2005
WARREN W. SCHAEFER, P.E.
P.E. NO. 44135

DRAWING NO. 1320A
REV.
SHEET NO. 3 OF 10

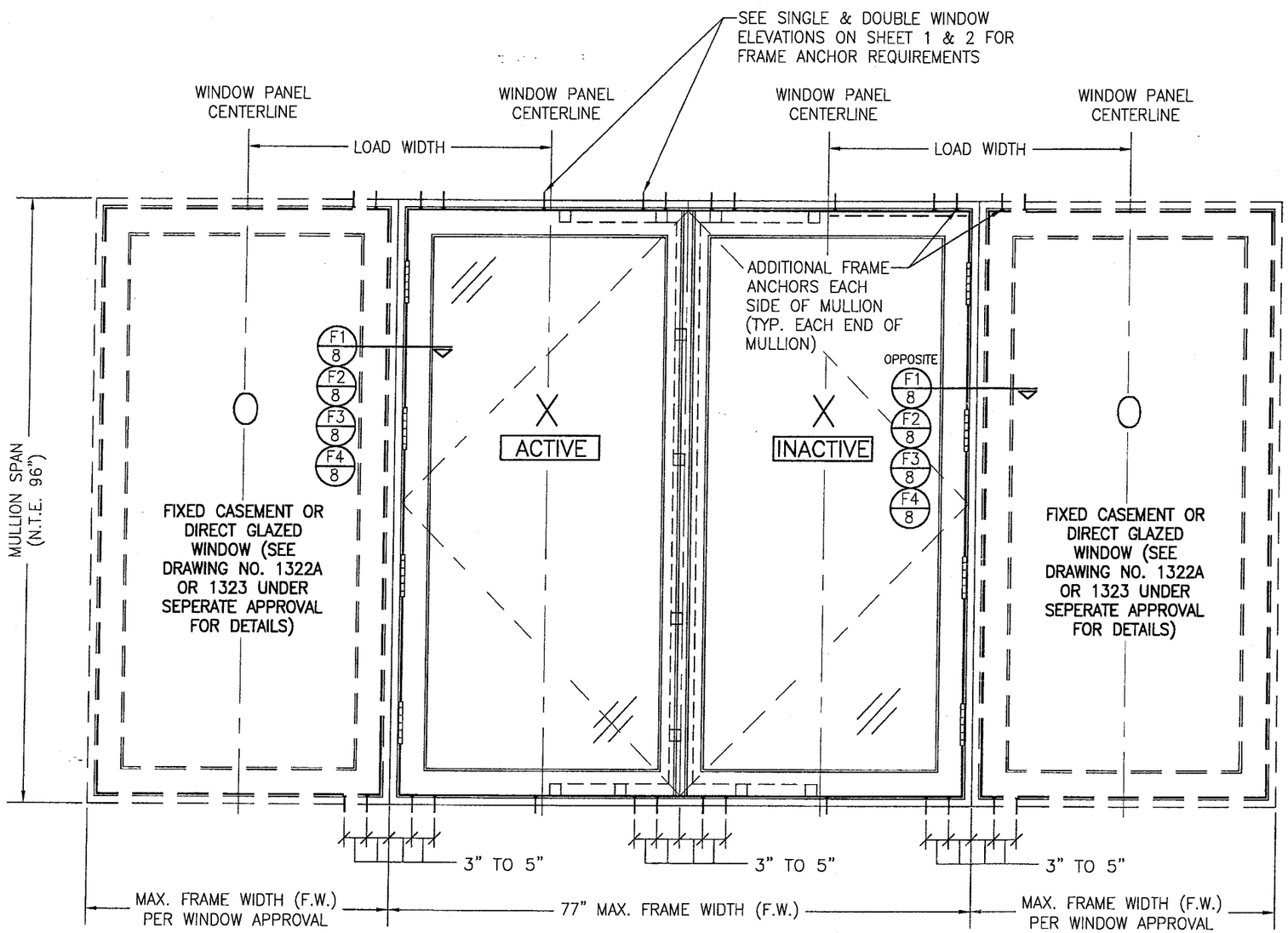

INTERIOR ELEVATION
DOUBLE WINDOW UNIT WITH SIDELITES

(HINGED WINDOW SHOWN. TILT–TURN ALSO APPLIES)
SCALE: N.T.S.

SEE DOUBLE & SINGLE WINDOW ELEVATIONS FOR DETAIL NOT SHOWN
(OXXO UNIT SHOWN. ALL OTHER FIXED/OPERABLE COMBINATIONS ALSO APPLY WITH THE MULLION CONDITIONS SHOWN.)

MULLION ALLOWABLE LOAD TABLE

MAXIMUM MULLION SPAN (IN.)	MAXIMUM LOAD WIDTH (IN.)	ALLOWABLE PRESSURE (POS. & NEG. PSF)	
		NON–REINFORCED MULLION	REINFORCED MULLION
96	54	36.5	53.2
	48	40.2	58.6
	42	44.9	65.5
	39	48.0	70.0
	36	51.0	75.0
	30	58.9	75.0
	24	71.0	75.0
	22	75.0	75.0
90	54	42.1	61.3
	48	46.2	65.9
	42	51.6	72.1
	39	54.4	75.0
	36	57.7	75.0
	30	66.5	75.0
	24	75.0	75.0
84	54	49.3	67.9
	48	53.7	72.5
	42	58.5	75.0
	39	61.5	75.0
	36	65.1	75.0
	30	75.0	75.0
78	54	59.4	75.0
	48	63.1	75.0
	42	68.3	75.0
	39	71.7	75.0
	36	75.0	75.0
72	54	72.9	75.0
	48	75.0	75.0
66	54	75.0	75.0

LESSER OF THE PRESSURE SHOWN IN THIS TABLE & THAT ALLOWED FOR THE INDIVIDUAL WINDOW SHALL CONTROL AS ALLOWABLE FOR THE OVERALL UNIT.

Approved as complying with the Florida Building Code
Date 08/18/05
NOA# 05-0622.07
Miami-Dade Product Control Division
By

DRAWN BY: S.T.R.	CHECKED BY: W.W.S.
PLOT: 1=16	DATE: 3/18/05

NO.	REVISION DESCRIPTION	BY	DATE

DRAWING TITLE
AMERICAN IN–SWING CASEMENT IMPACT WOOD WINDOWS

MANUFACTURER
PEETZ WINDOWS & DOORS
5783 S.W. 40TH STREET; PMB 220
MIAMI, FL 33155
305–665–0291

CONSULTANTS
W. W. SCHAEFER ENGINEERING & CONSULTING, P.A.
8895 N. MILITARY TRAIL; SUITE C–204
PALM BEACH GARDENS, FL 33410
PHONE: 561–775–4902 FAX: 561–775–4903

CERTIFICATION
JUL 14 2005
WARREN W. SCHAEFER, P.E.
P.E. NO. 44135

DRAWING NO. 1320A
REV.
SHEET NO. 4 OF 10

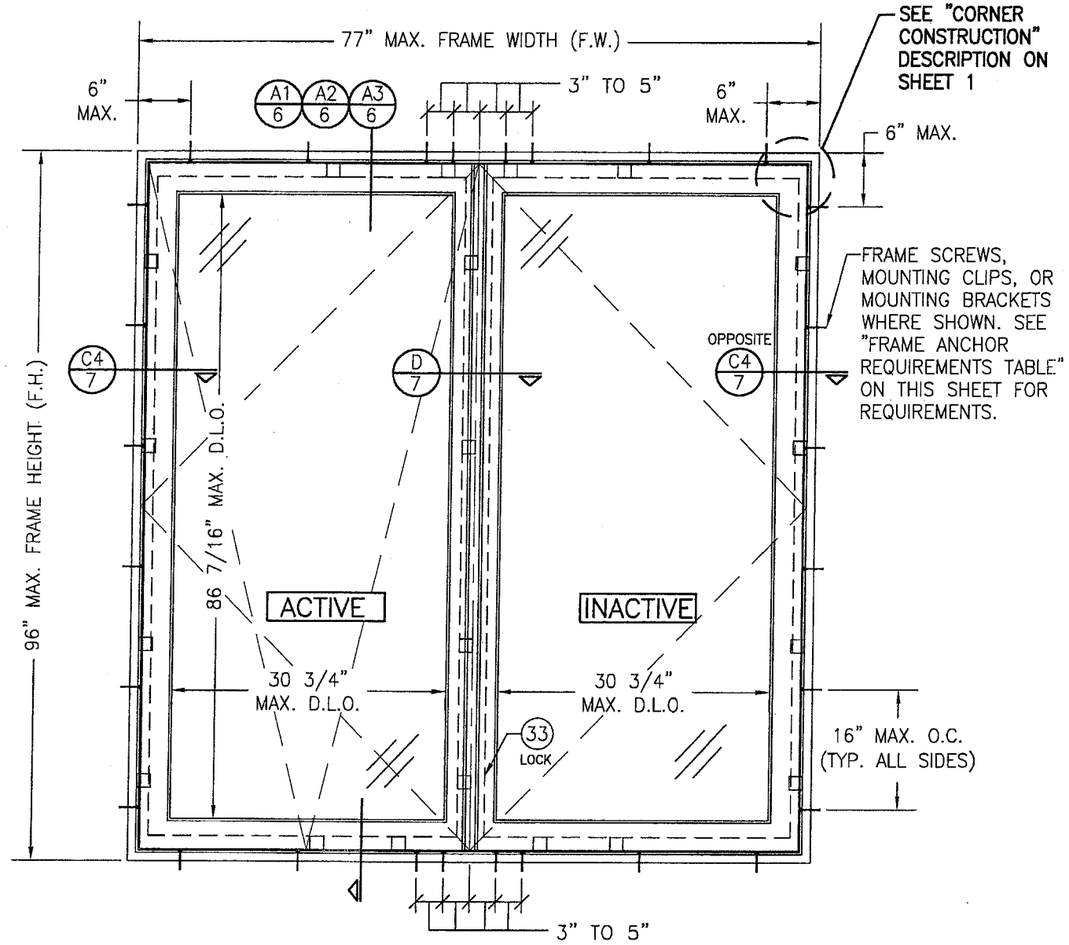

INTERIOR ELEVATION
DOUBLE RECTANGULAR TILT–TURN WINDOW UNIT
SCALE: N.T.S.
(ALSO APPLICABLE FOR ALL SHAPED WINDOWS)

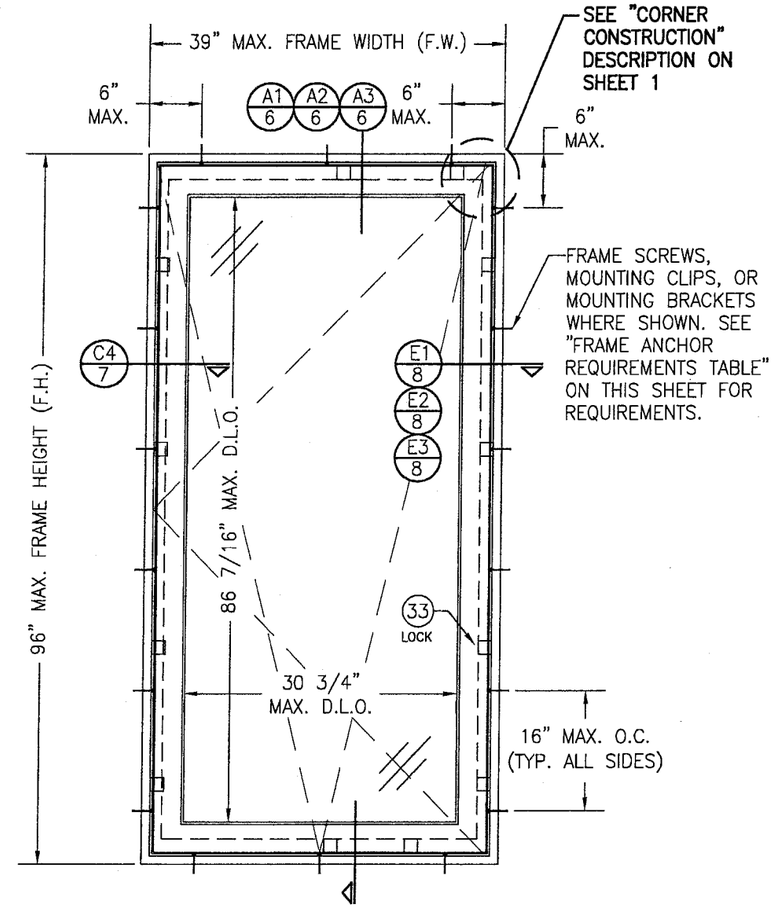

INTERIOR ELEVATION
SINGLE RECTANGULAR TILT–TURN WINDOW UNIT
SCALE: N.T.S.
(ALSO APPLICABLE FOR ALL SHAPED WINDOWS)

Approved as complying with the Florida Building Code
Date 08/18/05
NOA# 05-0622.07
Miami Dade Product Control Division
By

DRAWN BY: S.T.R.	CHECKED BY: W.W.S.
PLOT: 1=16	DATE: 3/18/05

NO.	REVISION DESCRIPTION	BY	DATE

DRAWING TITLE
AMERICAN IN–SWING CASEMENT IMPACT WOOD WINDOWS

MANUFACTURER
PEETZ WINDOWS & DOORS
5783 S.W. 40TH STREET; PMB 220
MIAMI, FL 33155
305–665–0291

CONSULTANTS
W. W. SCHAEFER ENGINEERING & CONSULTING, P.A.
8895 N. MILITARY TRAIL; SUITE C–204
PALM BEACH GARDENS, FL 33410
PHONE: 561–775–4902 FAX: 561–775–4903

CERTIFICATION
JUL 14 2005
WARREN W. SCHAEFER, P.E.
P.E. NO. 44135

DRAWING NO. 1320A
REV.
SHEET NO. 5 OF 10

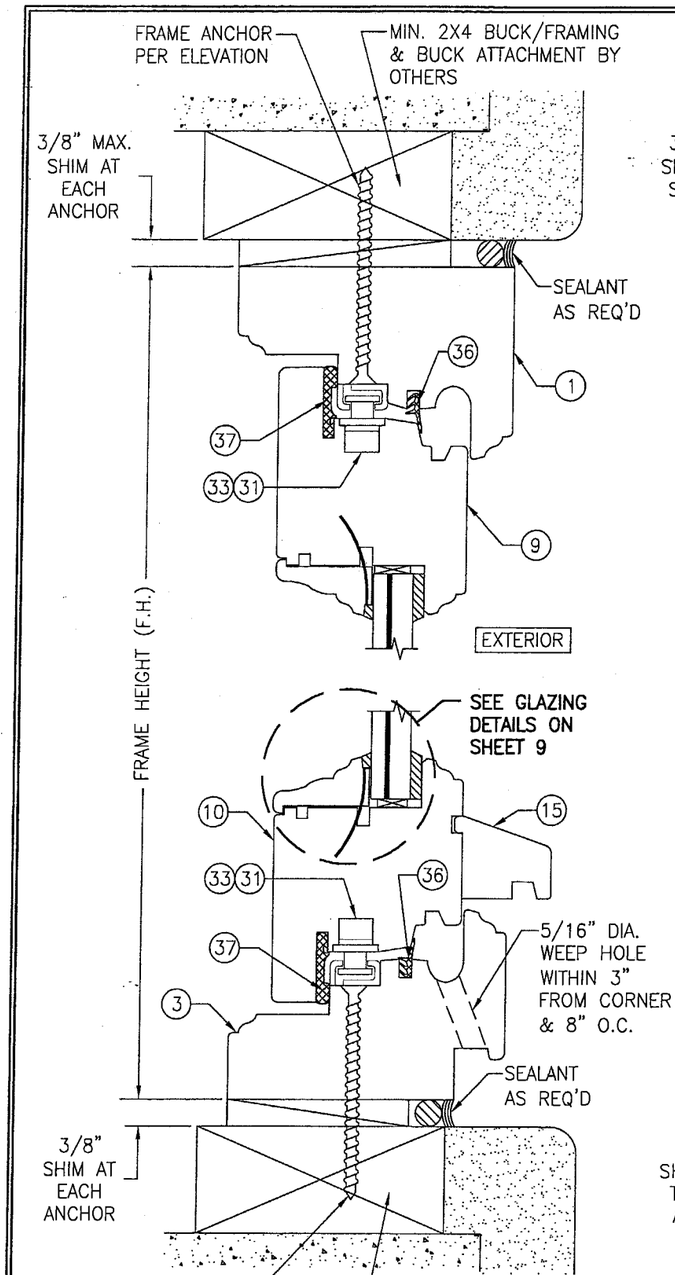

SECTION A1/6
SCALE: 1/2 FULL
(SCREW MOUNT)

BUCK CONDITION SHOWN. METAL STUD OR STRUCTURAL STEEL SUBSTRATES ALSO APPLY IN LIEU OF BUCKS PER FRAME ANCHOR REQUIREMENTS TABLE ON SHEET 1

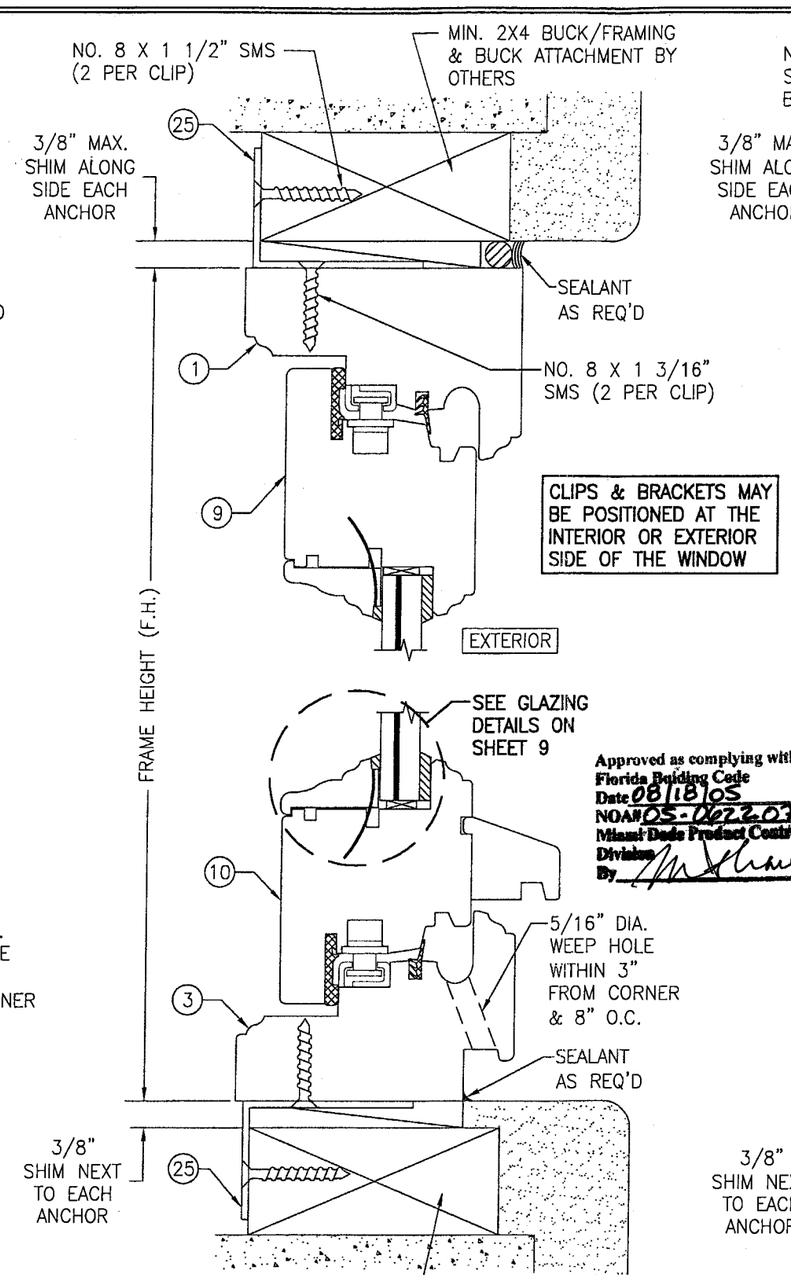

CLIPS & BRACKETS MAY BE POSITIONED AT THE INTERIOR OR EXTERIOR SIDE OF THE WINDOW

Approved as complying with the Florida Building Code
Date 08/18/05
NOA# 05-0622.02
Miami-Dade Product Control Division
By

SECTION A2/6
SCALE: 1/2 FULL
(SEE SECTION A1/5 FOR DETAILS NOT SHOWN)
(CLIP MOUNT)

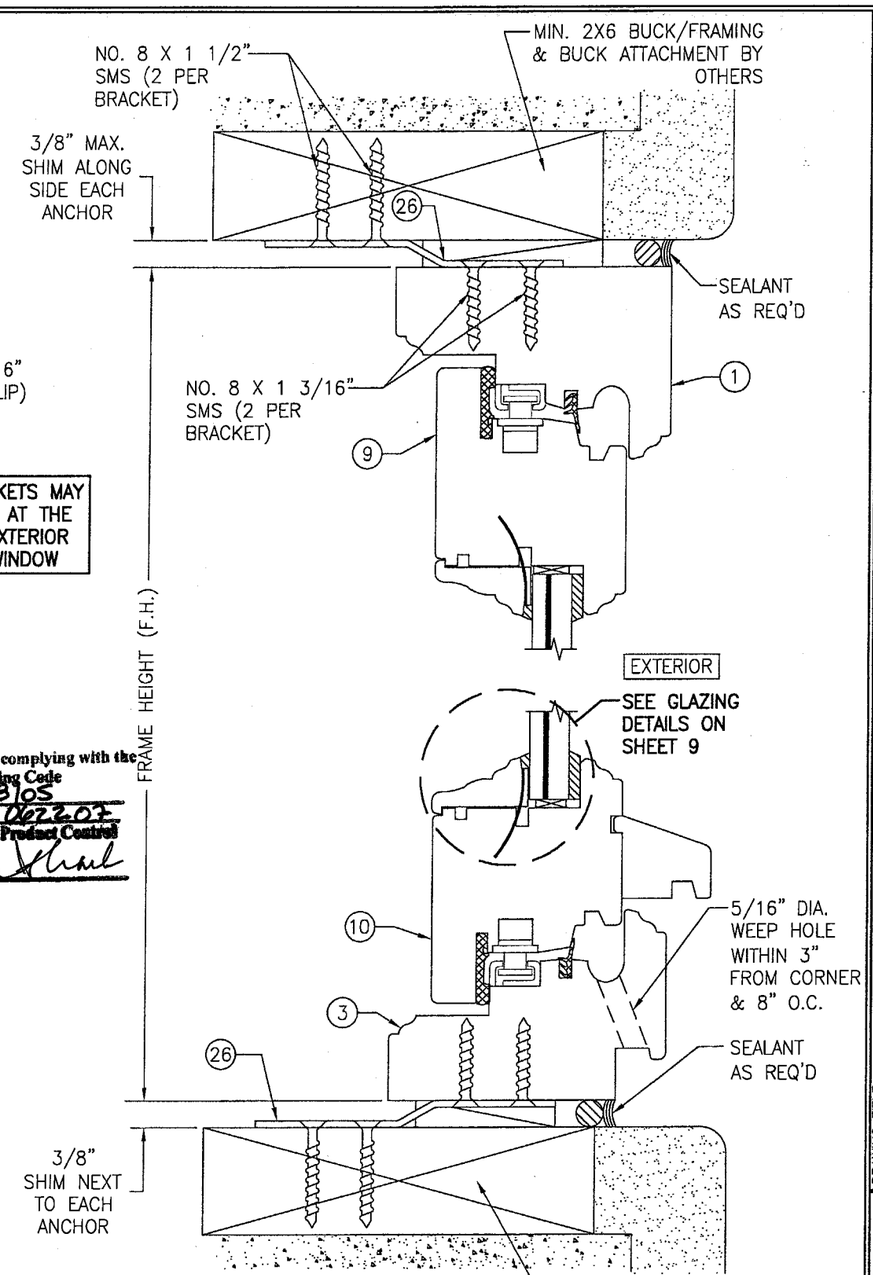

SECTION A3/6
SCALE: 1/2 FULL
(SEE SECTION A1/5 FOR DETAILS NOT SHOWN)
(BRACKET MOUNT)

BUCK CONDITION SHOWN. METAL STUD OR STRUCTURAL STEEL SUBSTRATES ALSO APPLY IN LIEU OF BUCKS PER FRAME ANCHOR REQUIREMENTS TABLE ON SHEET 1

DRAWN BY: S.T.R.	CHECKED BY: W.W.S.
PLOT: 1=2	DATE: 3/18/05

NO.	REVISION DESCRIPTION	BY	DATE

DRAWING TITLE
AMERICAN IN-SWING CASEMENT IMPACT WOOD WINDOWS

MANUFACTURER
PEETZ WINDOWS & DOORS
5783 S.W. 40TH STREET; PMB 220
MIAMI, FL 33155
305-665-0291

CONSULTANTS
W. W. SCHAEFER ENGINEERING & CONSULTING, P.A.
8895 N. MILITARY TRAIL; SUITE C-204
PALM BEACH GARDENS, FL 33410
PHONE: 561-775-4902 FAX: 561-775-4903

CERTIFICATION
JUL 14 2005
WARREN W. SCHAEFER, P.E.
P.E. NO. 44135

DRAWING NO. 1320A
REV.
SHEET NO. 6 OF 10

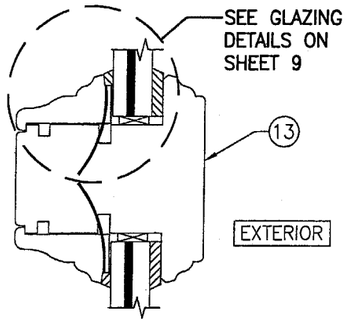

SECTION B/7
SCALE: 1/2 FULL

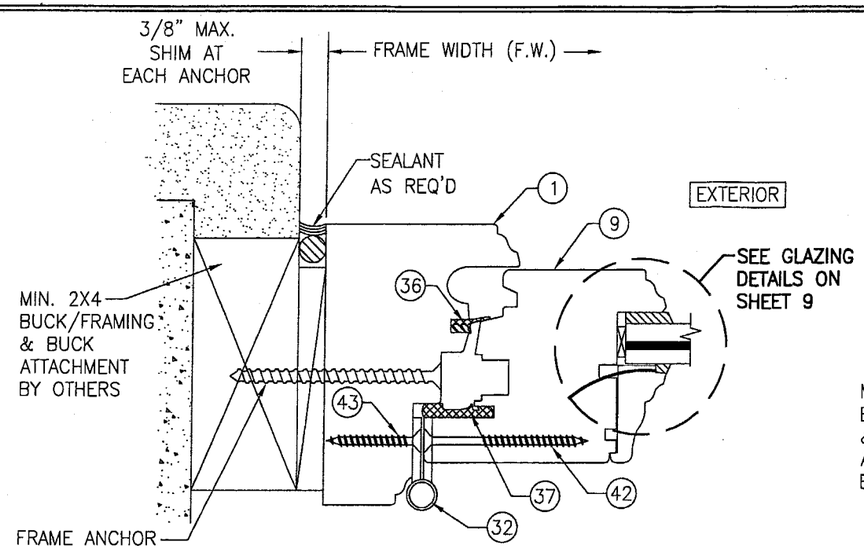

SECTION C1/7
SCALE: 1/2 FULL
(SCREW MOUNT)

BUCK CONDITION SHOWN. METAL STUD OR STRUCTURAL STEEL SUBSTRATES ALSO APPLY IN LIEU OF BUCKS PER FRAME ANCHOR REQUIREMENTS TABLE ON SHEET 1

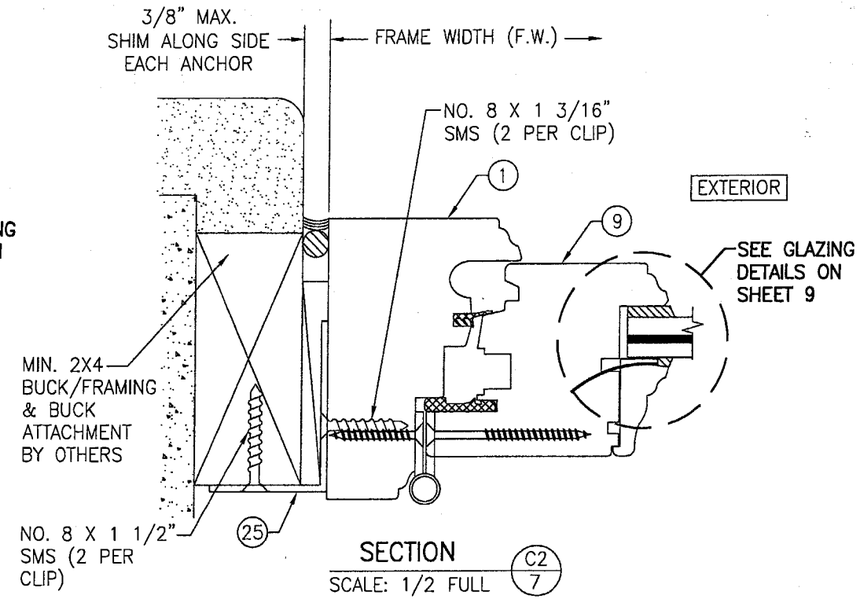

SECTION C2/7
SCALE: 1/2 FULL
(SEE SECTION C1/6 FOR DETAILS NOT SHOWN)
(CLIP MOUNT)

CLIPS & BRACKETS MAY BE POSITIONED AT THE INTERIOR OR EXTERIOR SIDE OF THE WINDOW

Approved as complying with the Florida Building Code
Date 08/18/05
NOA# 05-0622.07
Miami-Dade Product Control Division
By

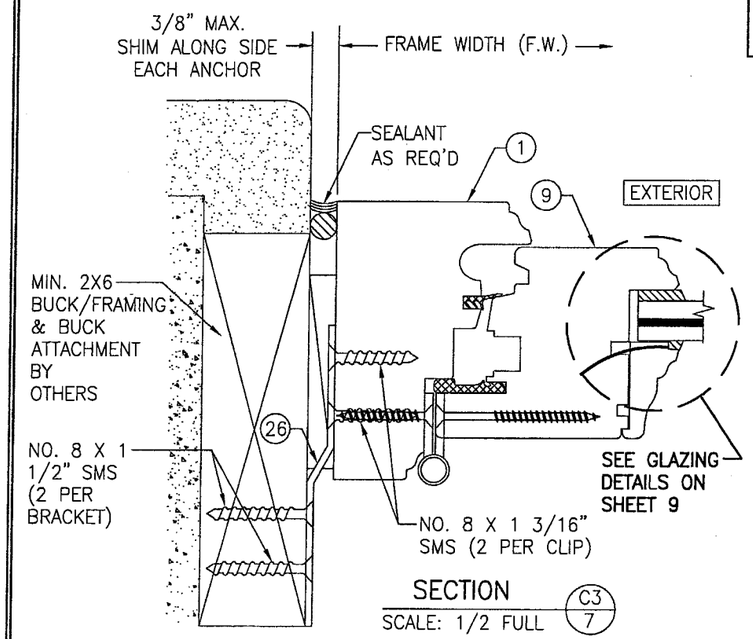

SECTION C3/7
SCALE: 1/2 FULL
(SEE SECTION C1/6 FOR DETAILS NOT SHOWN)
(BRACKET MOUNT)

BUCK CONDITION SHOWN. METAL STUD OR STRUCTURAL STEEL SUBSTRATES ALSO APPLY IN LIEU OF BUCKS PER FRAME ANCHOR REQUIREMENTS TABLE ON SHEET 1

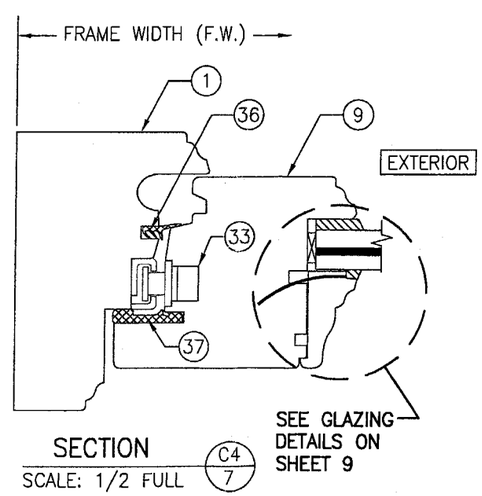

SECTION C4/7
SCALE: 1/2 FULL
(FOR INSTALLATION REQUIREMENTS, SEE SECTIONS C1/7, C2/7, & C3/7)

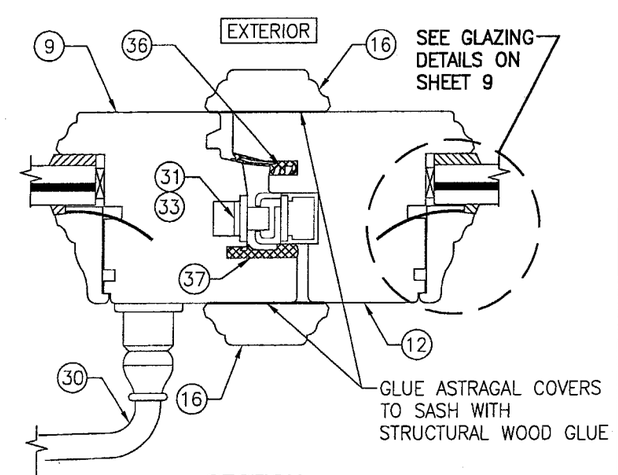

SECTION D/7
SCALE: 1/2 FULL

DRAWN BY: S.T.R.	CHECKED BY: W.W.S.
PLOT: 1=2	DATE: 3/18/05

NO.	REVISION DESCRIPTION	BY	DATE

DRAWING TITLE: AMERICAN IN-SWING CASEMENT IMPACT WOOD WINDOWS

MANUFACTURER: PEETZ WINDOWS & DOORS
5783 S.W. 40TH STREET; PMB 220
MIAMI, FL 33155
305-665-0291

CONSULTANTS: W. W. SCHAEFER ENGINEERING & CONSULTING, P.A.
8895 N. MILITARY TRAIL; SUITE C-204
PALM BEACH GARDENS, FL 33410
PHONE: 561-775-4902 FAX: 561-775-4903

CERTIFICATION: JUL 14 2005
WARREN W. SCHAEFER, P.E.
P.E. NO. 44135

DRAWING NO. 1320A
REV.
SHEET NO. 7 OF 10

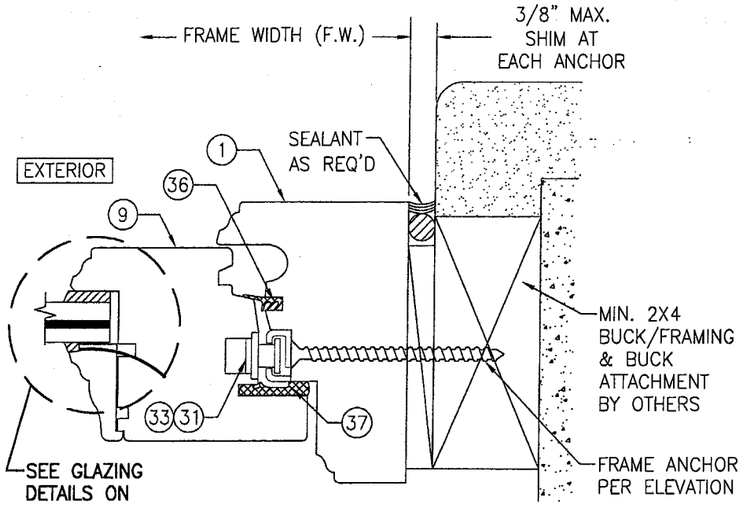

SECTION E1/8
SCALE: 1/2 FULL
(SCREW MOUNT)

BUCK CONDITION SHOWN. METAL STUD OR STRUCTURAL STEEL SUBSTRATES ALSO APPLY IN LIEU OF BUCKS PER FRAME ANCHOR REQUIREMENTS TABLE ON SHEET 1

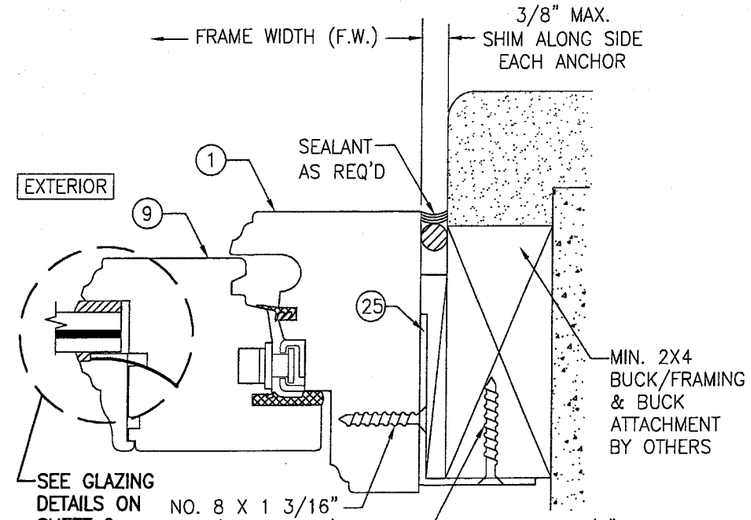

SECTION E2/8
SCALE: 1/2 FULL
(CLIP MOUNT)
(SEE SECTION E1/7 FOR DETAILS NOT SHOWN)

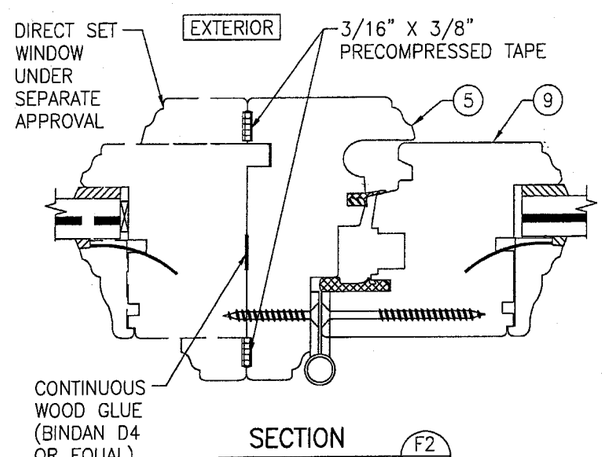

SECTION F2/8
SCALE: 1/2 FULL
(SEE OTHER SECTIONS FOR DETAILS NOT SHOWN)

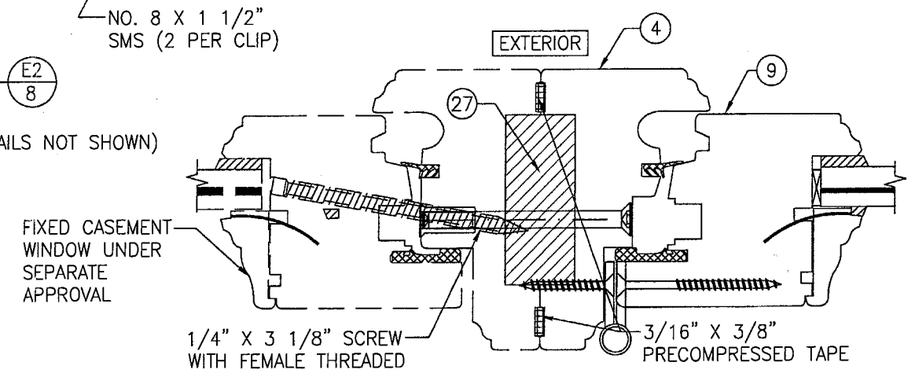

SECTION F3/8
SCALE: 1/2 FULL
(SEE OTHER SECTIONS FOR DETAILS NOT SHOWN)

CLIPS & BRACKETS MAY BE POSITIONED AT THE INTERIOR OR EXTERIOR SIDE OF THE WINDOW

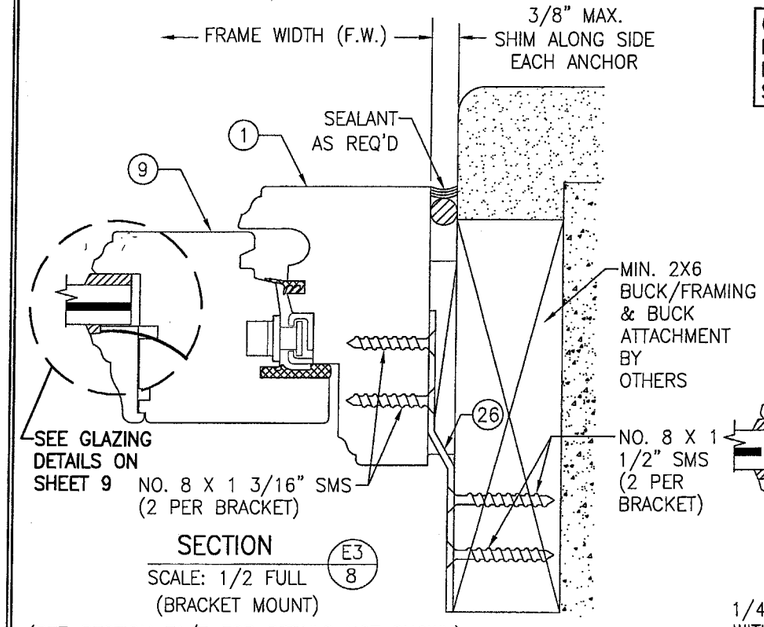

SECTION E3/8
SCALE: 1/2 FULL
(BRACKET MOUNT)
(SEE SECTION E1/7 FOR DETAILS NOT SHOWN)

BUCK CONDITION SHOWN. METAL STUD OR STRUCTURAL STEEL SUBSTRATES ALSO APPLY IN LIEU OF BUCKS PER FRAME ANCHOR REQUIREMENTS TABLE ON SHEET 1

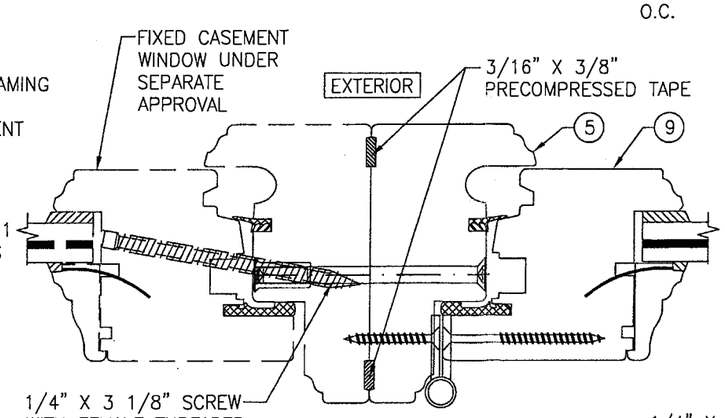

SECTION F1/8
SCALE: 1/2 FULL
(SEE OTHER SECTIONS FOR DETAILS NOT SHOWN)

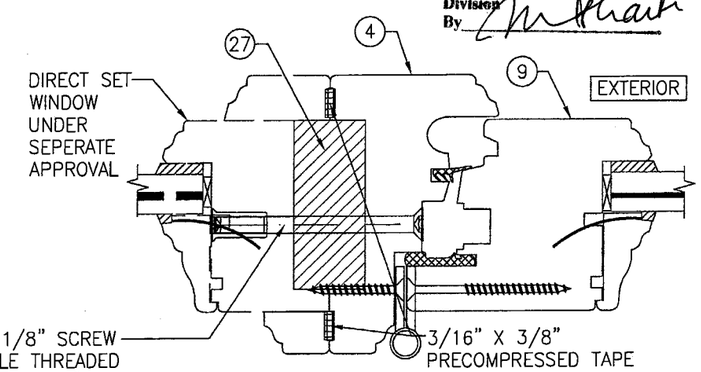

SECTION F4/8
SCALE: 1/2 FULL
(SEE OTHER SECTIONS FOR DETAILS NOT SHOWN)

Approved as complying with the Florida Building Code
Date 08/13/05
NOA# 05-0622.07
Miami Dade Product Control Division
By

DRAWN BY: S.T.R.	CHECKED BY: W.W.S.
PLOT: 1=2	DATE: 3/18/05

NO.	REVISION DESCRIPTION	BY	DATE

DRAWING TITLE
AMERICAN IN-SWING CASEMENT IMPACT WOOD WINDOWS

MANUFACTURER
PEETZ WINDOWS & DOORS
5783 S.W. 40TH STREET; PMB 220
MIAMI, FL 33155
305-665-0291

CONSULTANTS
W. W. SCHAEFER ENGINEERING & CONSULTING, P.A.
8895 N. MILITARY TRAIL; SUITE C-204
PALM BEACH GARDENS, FL 33410
PHONE: 561-775-4902 FAX: 561-775-4903

CERTIFICATION
JUL 14 2005
WARREN W. SCHAEFER, P.E.
P.E. NO. 44135

DRAWING NO. 1320A
REV.
SHEET NO. 8 OF 10

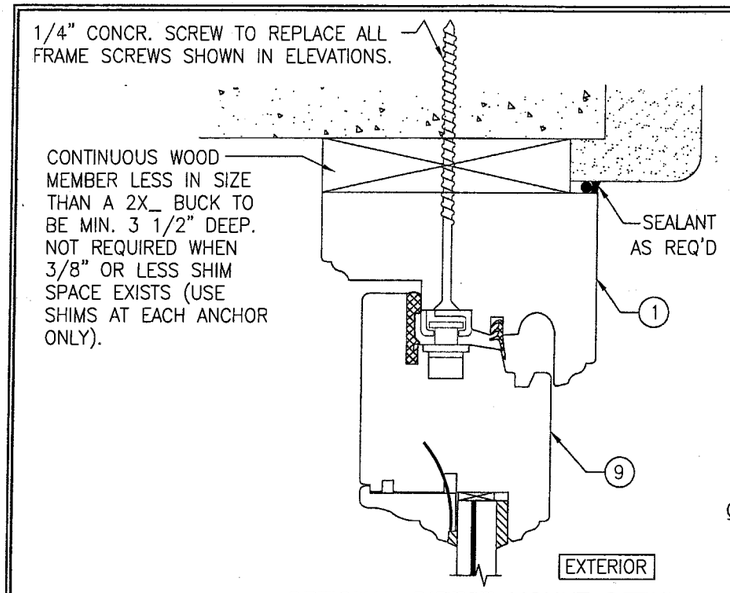

OPTIONAL DIRECT MOUNT DETAIL TO BLOCK OR CONCRETE WITH SPACER OR SHIM

HEAD SECTION SHOWN, SIDES AND SILL SIMILAR

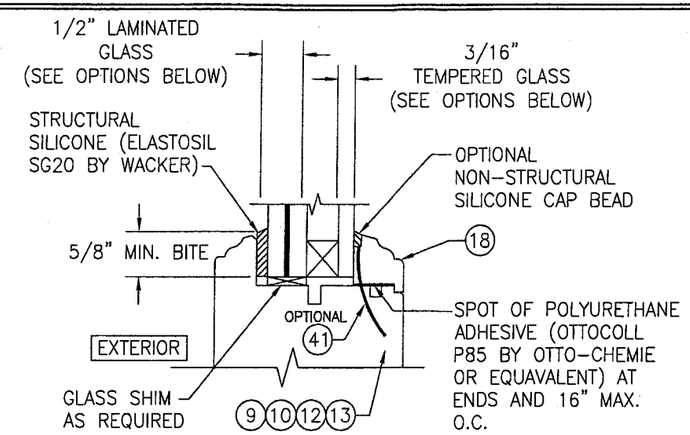

I.G. GLAZING DETAIL

GLASS OPTION:
1. 1/2" THICK SOLUTIA SAFLEX III LAMINATED OUTER GLASS (3/16" AN/0.09 SAFLEX IIIG PVB/1/4" AN); 3/16" TEMPERED SINGLE PANE INNER GLASS & 1/2" AIR SPACE
2. 1/2" THICK SOLUTIA VANCEVA LAMINATED OUTER GLASS (3/16" AN/0.075" VANCEVA/1/4" AN); 3/16" TEMPERED SINGLE PANE INNER GLASS & 1/2" AIR SPACE

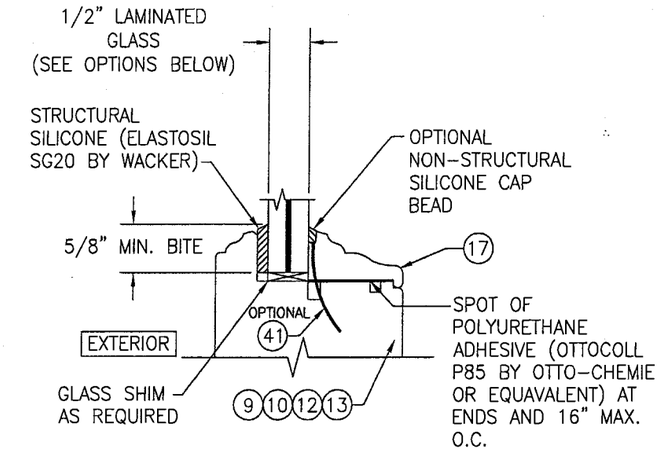

NON-I.G. GLAZING DETAIL

GLASS OPTION:
1. 1/2" THICK SOLUTIA SAFLEX III LAMINATED GLASS (3/16" AN/0.09 SAFLEX IIIG PVB/1/4" AN)
2. 1/2" THICK SOLUTIA VANCEVA LAMINATED GLASS (3/16" AN/0.075" VANCEVA/1/4" AN)

Approved as complying with the Florida Building Code
Date 08/18/05
NOA# 05-0622.02
Miami-Dade Product Control Division
By

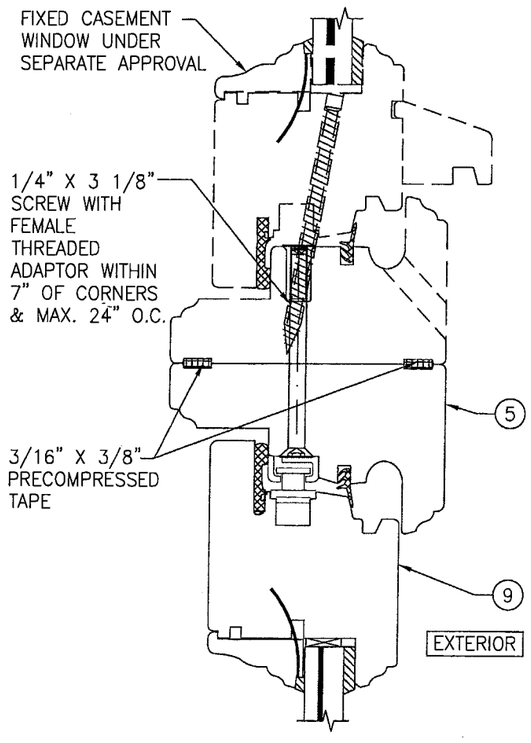

SECTION G1/9
SCALE: 1/2 FULL
(SEE DETAIL A1/5 FOR DETAILS NOT SHOWN)

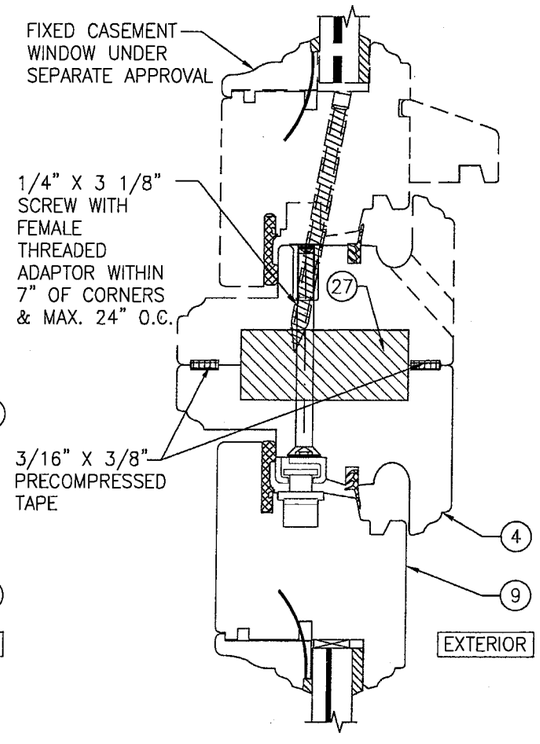

SECTION G2/9
SCALE: 1/2 FULL
(SEE DETAIL A1/5 FOR DETAILS NOT SHOWN)

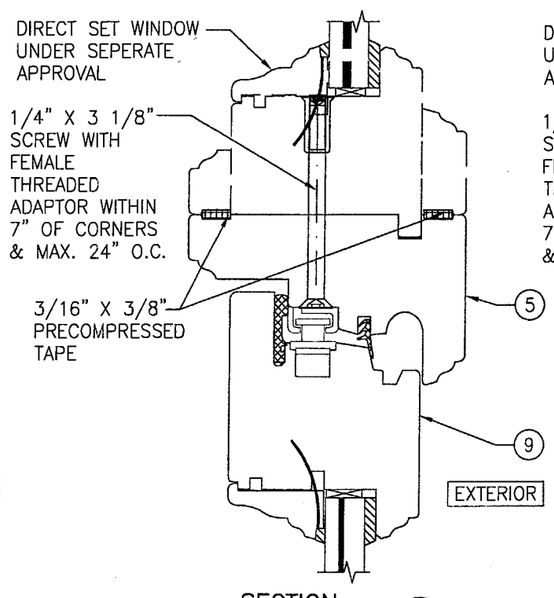

SECTION G3/9
SCALE: 1/2 FULL
(SEE DETAIL A1/5 FOR DETAILS NOT SHOWN)

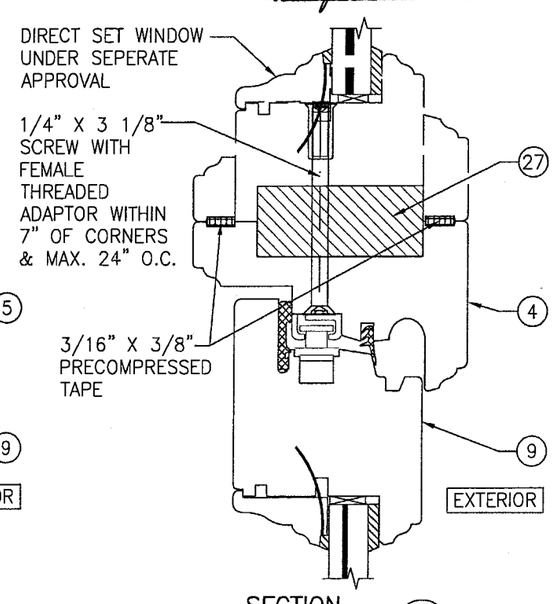

SECTION G4/9
SCALE: 1/2 FULL
(SEE DETAIL A1/5 FOR DETAILS NOT SHOWN)

DRAWN BY: S.T.R.	CHECKED BY: W.W.S.
PLOT: 1=2	DATE: 3/18/05

NO.	REVISION DESCRIPTION	BY	DATE

DRAWING TITLE
AMERICAN IN-SWING CASEMENT IMPACT WOOD WINDOWS

MANUFACTURER
PEETZ WINDOWS & DOORS
5783 S.W. 40TH STREET; PMB 220
MIAMI, FL 33155
305-665-0291

CONSULTANTS
W. W. SCHAEFER ENGINEERING & CONSULTING, P.A.
8895 N. MILITARY TRAIL; SUITE C-204
PALM BEACH GARDENS, FL 33410
PHONE: 561-775-4902 FAX: 561-775-4903

CERTIFICATION
JUL 14 2005
WARREN W. SCHAEFER, P.E.
P.E. NO. 44135

DRAWING NO. 1320A
REV.
SHEET NO. 9 OF 10

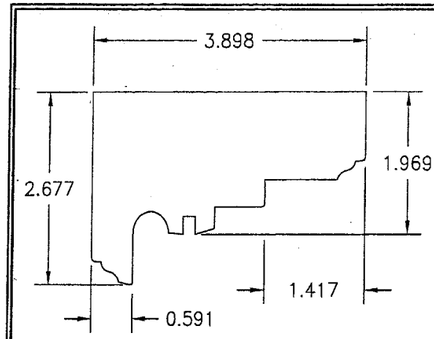

1 HEAD AND SIDE JAMB

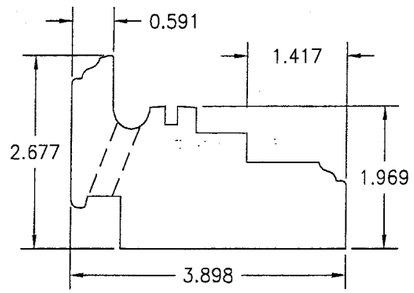

3 SILL JAMB

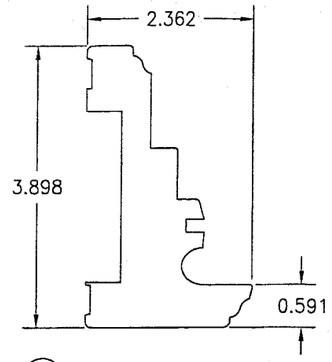

4 REINFORCED MULLION HEAD JAMB

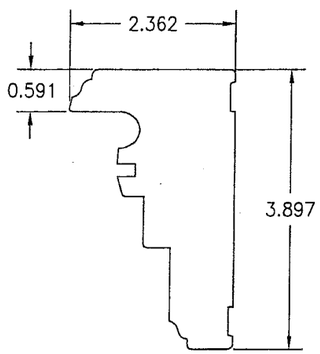

5 NON-REINFORCED MULLION JAMB

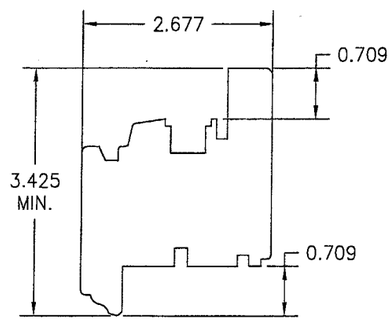

9 HEAD AND SIDE SASH

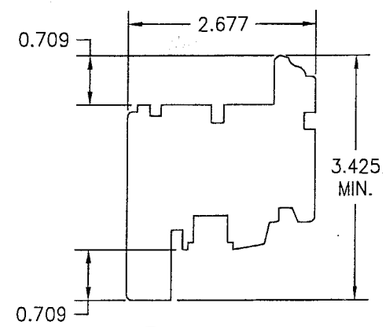

10 SILL SASH

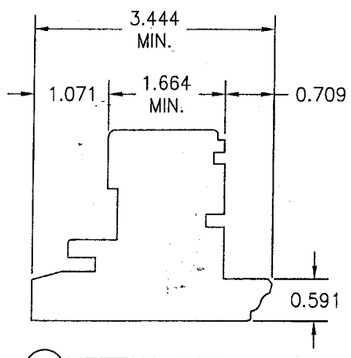

12 MEETING SASH

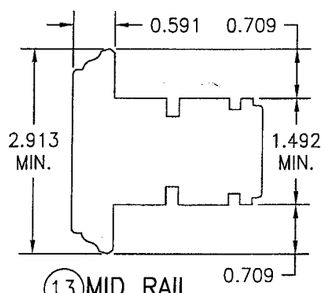

13 MID RAIL

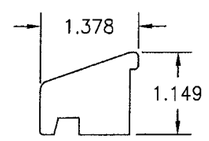

15 SILL DRIP

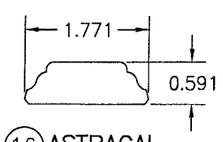

16 ASTRAGAL COVER

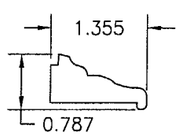

17 NON-I.G. GLAZING BEAD

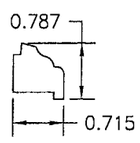

18 I.G. GLAZING BEAD

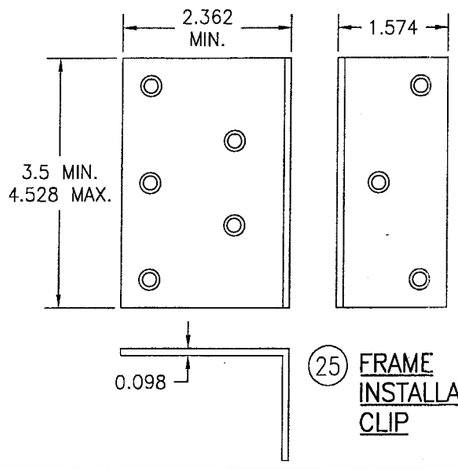

25 FRAME INSTALLATION CLIP

ITEM #	ITEM DESCRIPTION	MANUFACTURER/NOTES
	PARTS	
1	HEAD AND SIDE JAMB	MAHOGANY
3	SILL JAMB	MAHOGANY
4	REINFORCED MULLION HEAD JAMB	MAHOGANY
5	NON-REINFOCED MULLION JAMB	MAHOGANY
9	HEAD AND SIDE SASH	MAHOGANY
10	SILL SASH	MAHOGANY
12	MEETING SASH	MAHOGANY
13	MID RAIL	MAHOGANY
15	SILL DRIP	MAHOGANY
16	ASTRAGAL COVER	MAHOGANY
17	NON-I.G. GLAZING BEAD	MAHOGANY
18	I.G. GLAZING BEAD	MAHOGANY
25	FRAME INSTALLATION CLIP	GALVANIZED 34.1 KSI STEEL
26	FRAME INSTALLATION BRACKET	GALVANIZED 34.1 KSI STEEL
27	MULLION REINFORCEMENT	A36 STEEL (FY = 36 KSI)
	HARDWARE	
30	LOCK HANDLE	AS REQUIRED TO OPERATE LOCKS
31	MULTI-POINT LOCK SYSTEM (HINGED WINDOW)	GU, ROTO OR SIEGENIA MUSHROOM CAM SYSTEM
32	HINGE (2 3/16" X 5 1/2")	BRASS BY BROS
33	MULTI-POINT LOCK SYSTEM (TILT-TURN WINDOW)	SIEGENIA MUSHROOM CAM SYSTEM WITH CONCEALED HINGES
	SEALS AND SEALANTS	
36	SWEEP	GTG EPDM
37	COMPRESSION SEAL	SCHLEGEL
38	3/8" X 3/16" PRECOM PRESSED TAPE	N/A
	FASTENERS	
40	.295" X 3 5/8" AMO III GALVANIZED STEEL SCREWS	5 1/2" FROM INNER CORNERS & 14" O.C.
41	OPTIONAL 18 GA. X 1 1/4" GALVANIZED CURVED NAIL	10" FROM CORNERS & 20" O.C.
42	3/16" X 1 3/16" SCREWS	4 PER HINGE (@ DOOR)
43	3/16" X 2 3/4" SCREWS	4 PER HINGE (@ JAMB)

NOTE: MAHOGANY USED IN TESTING WAS MERANTI MAHOGANY. OTHER WOOD SPECIES APPLICABLE FOR USE WITH THIS PRODUCT ARE MERBAU, DOUSSIE, SIPO, SAPELLI, HONDURAS MAHOGANY OR OAK. ALL WOOD IS MINIMUM GRADE 2 MILLED BY PEETZ TO SELECT.

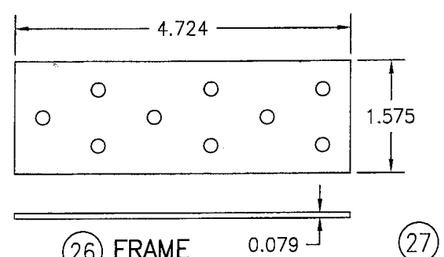

26 FRAME INSTALLATION BRACKET

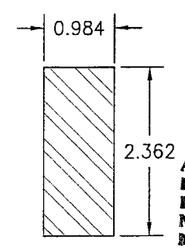

27 TRANSOM MULLION REINFORCEMENT

Approved as complying with the Florida Building Code
Date 08/18/05
NOA# 05-0622.02
Miami Dade Product Control Division
By

DRAWN BY: S.T.R.	CHECKED BY: W.W.S.
PLOT: 1=2	DATE: 3/18/05

NO.	REVISION DESCRIPTION	BY	DATE

DRAWING TITLE
AMERICAN IN-SWING CASEMENT IMPACT WOOD WINDOWS

MANUFACTURER
PEETZ WINDOWS & DOORS
5783 S.W. 40TH STREET; PMB 220
MIAMI, FL 33155
305-665-0291

CONSULTANTS
W. W. SCHAEFER ENGINEERING & CONSULTING, P.A.
8895 N. MILITARY TRAIL; SUITE C-204
PALM BEACH GARDENS, FL 33410
PHONE: 561-775-4902 FAX: 561-775-4903

CERTIFICATION
JUL 14 2005
WARREN W. SCHAEFER, P.E.
P.E. NO. 44135

DRAWING NO. 1320A
REV.
SHEET NO. 10 OF 10