MIAMI-DADE COUNTY

BUILDING CODE COMPLIANCE OFFICE (BCCO)
PRODUCT CONTROL DIVISION

MIAMI-DADE COUNTY, FLORIDA
METRO-DADE FLAGLER BUILDING
140 WEST FLAGLER STREET, SUITE 1603
MIAMI, FLORIDA 33130-1563
(305) 375-2901 FAX (305) 375-2908
www.buildingcodeonline.com

NOTICE OF ACCEPTANCE (NOA)

QMI Roll Shutter.
1661 Glenlake Avenue
Itasca, IL 60143

SCOPE:

This NOA is being issued under the applicable rules and regulations governing the use of construction materials. The documentation submitted has been reviewed by Miami-Dade County Product Control Division and accepted by the Board of Rules and Appeals (BORA) to be used in Miami Dade County and other areas where allowed by the Authority Having Jurisdiction (AHJ).

This NOA shall not be valid after the expiration date stated below. The Miami-Dade County Product Control Division (In Miami Dade County) and/or the AHJ (in areas other than Miami Dade County) reserve the right to have this product or material tested for quality assurance purposes. If this product or material fails to perform in the accepted manner, the manufacturer will incur the expense of such testing and the AHJ may immediately revoke, modify, or suspend the use of such product or material within their jurisdiction. BORA reserves the right to revoke this acceptance, if it is determined by Miami-Dade County Product Control Division that this product or material fails to meet the requirements of the applicable building code.

This product is approved as described herein, and has been designed to comply with the Florida Building Code, including the High Velocity Hurricane Zone.

DESCRIPTION: Extruded Aluminum 55 mm AL3-E Slat Roll Up Shutter

APPROVAL DOCUMENT: Drawing No. **05-090**, titled "55mm AL3-E Slat Roll-Up Shutter", sheets 1 through 15 of 15, prepared by Tilteco, Inc. dated 05/04/05 with last revision"**4**", on 05/11/06, signed and sealed by Walter A. Tillit Jr, P E, bearing the Miami-Dade County Product Control Renewal stamp with the Notice of Acceptance number and expiration date by the Miami-Dade County Product Control Division.

MISSILE IMPACT RATING: Large and Small Missile Impact

LABELING: Each unit shall bear a permanent label with the manufacturer's name or logo, city, state and following statement: "Miami-Dade County Product Control Approved", unless otherwise noted herein.

RENEWAL of this NOA shall be considered after a renewal application has been filed and there has been no change in the applicable building code negatively affecting the performance of this product.

TERMINATION of this NOA will occur after the expiration date or if there has been a revision or change in the materials, use, and/or manufacture of the product or process. Misuse of this NOA as an endorsement of any product, for sales, advertising or any other purposes shall automatically terminate this NOA. Failure to comply with any section of this NOA shall be cause for termination and removal of NOA.

ADVERTISEMENT: The NOA number preceded by the words Miami-Dade County, Florida, and followed by the expiration date may be displayed in advertising literature. If any portion of the NOA is displayed, then it shall be done in its entirety.

INSPECTION: A copy of this entire NOA shall be provided to the user by the manufacturer or its distributors and shall be available for inspection at the job site at the request of the Building Official.

This NOA **revises and renews NOA # 02-0726.04** and, consists of this page 1 and evidence page E-1 and E-2, as well as approval document mentioned above.

The submitted documentation was reviewed by **Jaime D. Gascon, P.E.**

PRODUCT CONTROL ACCEPTED

J. Gascon
6/9/06

QMI Roll Shutter.

NOTICE OF ACCEPTANCE: EVIDENCE SUBMITTED

A. DRAWINGS

1. Manufacturer's parts and sections drawings.
2. Drawing No. **05-090**, titled "55 mm AL3-E Slat Roll-Up Shutter", sheets 1 through 15 of 15, prepared by Tilteco Inc., dated 05/04/05 with last revision "**4**", on 05/11/05, signed and sealed by Walter A. Tillit Jr., PE.

B. TESTS

1. Test report on Large Missile Impact Test per TAS-201-94, Cyclic Wind Pressure Test per TAS- 203-94 and Uniform Static Air Pressure Test per TAS 202-94 of 55 of Aluminum Roll-Up Shutter prepared by Fenestration Testing Laboratory Inc, report No. **2984**, dated 02/15/01, signed and sealed by A. P. Acevedo, PE.
   "Submitted under NOA# 02-0726.04"
2. Test report on Large Missile Test per TAS 201, of Mullions and Storm Bars, prepared by Fenestration Testing Laboratory, Inc., report No. **2699**, dated 08/18/00, signed and sealed by A. P. Acevedo, PE
   "Submitted under NOA# 02-0726.03"
3. Test report on Large Missile Impact Test per TAS 201, of Aluminum Header Box, prepared by Fenestration Testing Laboratory, Inc, report No. **2848**, dated 10/26/00, signed and sealed by A. P. Acevedo, PE.
   "Submitted under NOA# 02-0726.03"

C. CALCULATIONS

1. Revised Anchor Calculations and structural; analysis, prepared by Tilteco Inc., dated 05/27/05, singed and sealed Walter A. Tillit Jr. , P. E.

D. QUALITY ASSURANCE

1. Miami Dade Building Code Compliance Office (BCCO).

E. MATERIAL CERTIFICATIONS

1. Tensile Report No. 2984, per ASTM B557-94, prepared by Fenestration Testing Laboratory, Inc dated 06/22/01, signed and sealed by L. A. Figueredo, PE.
   "Submitted under NOA# 02-0726.03"
2. Material Certification prepared by W. L. Bonnell Co. Inc, of Aluminum 6005-T5, dated 06/26/01 without signature.
   "Submitted under NOA# 02-0726.03"

F. STATEMENTS

1. Letter of compliance and no financial interest, issued by Tilteco, Inc, on 04/11/06, signed and sealed by Walter A. Tillit Jr P.E.

Jaime D. Gascon, P.E.
Chief, Product Control Division
NOA No 05-0623.05
Expiration Date: November 8, 2011
Approval Date: June 29, 2006

QMI Roll Shutter.

NOTICE OF ACCEPTANCE: EVIDENCE SUBMITTED

G. OTHER

1. Notice of Acceptance No. **02-0726.04**, OMI Roll Shutter, "Extruded Aluminum Roll Up Shutter", approved on 02/06/03 and expiring on 11/08/06.

Jaime D. Gascon, P.E.
Chief, Product Control Division
NOA No 05-0623.05
Expiration Date: November 8, 2011
Approval Date: June 29, 2006

GENERAL NOTES:

1. ROLL–UP SHUTTER SHOWN ON THIS PRODUCT EVALUATION DOCUMENT (P. A. D.) HAS BEEN VERIFIED FOR CODE COMPLIANCE IN ACCORDANCE WITH THE 2004 EDITION OF THE FLORIDA BUILDING CODE.
DESIGN WIND LOADS SHALL BE DETERMINED AS PER SECTION 1620 OF THE ABOVE MENTIONED CODE.
ROLL–UP SHUTTER'S ADEQUACY FOR IMPACT AND FATIGUE RESISTANCE HAS BEEN VERIFIED IN ACCORDANCE WITH SECTION 1609.1.4 OF THE ABOVE MENTIONED CODE AS PER FENESTRATION TESTING LAB REPORTS # 2699, 2984 & 3122, PER TAS 201, 202 AND 203 PROTOCOLS.

2. ALL ALUMINUM EXTRUSIONS SHALL BE 6005–T5 ALLOY (UNLESS OTHERWISE NOTED).

3. ALL SCREWS TO BE STAINLESS STEEL 304 OR 316 SERIES W/50 ksi YIELD STRENGTH AND 90 ksi TENSILE STRENGTH OR CORROSION RESISTANT COATED CARBON STEEL AS PER DIN 50018.

4. BOLTS TO BE A.S.T.M. A–307, GALVANIZED OR AISI 304 SERIES STAINLESS STEEL WITH 36 ksi MINIMUM YIELD POINT.

5. STORM BARS AT FLOOR OR CEILING MOUNTING INSTALLATIONS MAY BE REMOVABLE AT NON HURRICANE CONDITIONS. HOWEVER, EACH STORM BAR SHALL BEAR A PERMANENT LABEL IN A VISIBLE PLACE WITH A WARNING NOTE INSTRUCTING THE TENANT OR OWNER THAT STORM BARS MUST BE INSTALLED WITH CORRESPONDING HARDWARE DURING PERIODS OF HURRICANE WARNING AND THAT ROLL UP SHUTTERS WILL NOT OFFER HURRICANE PROTECTION UNLESS ALL STORM BARS ARE INSTALLED AS DIRECTED.

6. REMOVABLE STORM BARS SHALL BE STORED IN A CONSPICUOUS PLACE WITH EASY AND IMMEDIATE ACCESS SO THAT THEY CAN BE REACHED AND INSTALLED ANY TIME (HURRICANE CONDITIONS OR NOT) SLATS ARE ROLLED DOWN. THE EFFECT OF THE SLATS ROLLED DOWN WITHOUT STORM BARS IS; THOSE SLATS WILL SLIP OUT OF TRACK DUE TO THE DEFLECTION CAUSED BY WIND FORCES.

7. ANCHORS TO WALL FOR SIDE RAILS & BOX CONNECTION SHALL BE AS FOLLOWS:
(A) TO EXISTING POURED CONCRETE : MIN. 3320 p.s.i. COMPRESSIVE STRENGTH.
–1/4" ø TAPCON ANCHORS AS MANUFACTURED BY ELCO TEXTRON.

NOTES:
A.1) MINIMUM EMBEDMENT OF TAPCON ANCHORS INTO POURED CONCRETE SHALL BE 1 3/4", NO EMBEDMENT INTO STUCCO SHALL BE CONSIDERED AS PART OF THE REQUIRED EMBEDMENT.

A.2) IN CASE THAT PRECAST STONE, PRECAST CONCRETE PANELS, OR PAVERS BE FOUND ON THE EXISTING WALL OR FLOOR, ANCHORS SHALL BE LONG ENOUGH TO REACH THE MAIN STRUCTURE BEHIND SUCH PANELS.

B) TO EXISTING CONCRETE BLOCK WALL:
–1/4" ø TAPCON ANCHORS, AS MANUFACTURED BY ELCO TEXTRON.

NOTES:
B.1) MINIMUM EMBEDMENT OF TAPCON ANCHORS, INTO THE CONCRETE BLOCK UNIT SHALL BE 1 1/4".

B.2) IN CASE THAT PRECAST STONE OR PRECAST CONCRETE PANELS BE FOUND ON THE EXISTING WALL, ANCHORS SHALL BE LONG ENOUGH TO REACH THE MAIN STRUCTURE BEHIND SUCH PANELS.

C) ANCHORS REQUIRED FOR STORM BARS, HEADERS & MULLION CONNECTIONS SHALL BE AS SPECIFIED ON APPLICABLE SECTIONS SHOWN ON SHEETS 6, 6A, 7 & 8 OF 15 RESPECTIVELY. POWER BOLTS & CALK–IN ANCHORS TO BE AS MANUFACTURED BY POWERS FASTENERS, INC. & TAPCON ANCHORS AS MANUFACTURED BY ELCO TEXTRON, MINIMUM EDGE DISTANCE AND SPACING FOR ABOVE MENTIONED ANCHORS SHALL BE AS INDICATED BELOW OR AS SHOWN ON CORRESPONDING DETAILS FOR EACH SHUTTER COMPONENT INSTALLATION IN THIS DRAWING, WHICHEVER IS LARGER (MORE CRITICAL).

ANCHOR	SPACING	EDGE DISTANCE
1/4"ø TAPCON	3"	3"
1/4"ø CALK–IN	2 1/2"	3"
3/8"ø CALK–IN	3 3/4"	4 1/2"
1/2"ø CALK–IN	5"	6"
3/8"ø POWER BOLT	3 3/4"	4 1/2"
5/8"ø POWER BOLT	6 1/4"	7 1/2"
3/4"ø POWER BOLT	7 1/2"	9"

(D) ANCHORS SHALL BE INSTALLED FOLLOWING ALL OF THE RECOMMENDATIONS AND SPECIFICATIONS OF THE ANCHOR'S MANUFACTURER.

8. IT SHALL BE THE RESPONSIBILITY OF THE CONTRACTOR TO VERIFY THE SOUNDNESS OF THE STRUCTURE WHERE SHUTTER IS TO BE ATTACHED TO INSURE PROPER ANCHORAGE.

9. ROLL–UP MECHANISM NOT PART OF THIS APPROVAL, BUT SHALL BE CERTIFIED BY AN INDEPENDENT TESTING AGENCY.

10.(a) THIS P.A.D. PREPARED BY THIS ENGINEER IS GENERIC AND DOES NOT PROVIDE INFORMATION FOR A SITE SPECIFIC PROJECT; i.e. WHERE THE SITE CONDITIONS DEVIATE FROM THE P.A.D.

(b) CONTRACTOR TO BE RESPONSIBLE FOR THE SELECTION, PURCHASE AND INSTALLATION INCLUDING LIFE SAFETY OF THIS PRODUCT, BASED ON THIS P.A.D. PROVIDED
HE/SHE DOES NOT DEVIATE FROM THE CONDITIONS DETAILED ON THIS DOCUMENT. CONSTRUCTION SAFETY AT SITE IS THE CONTRACTOR'S RESPONSIBILITY.

(c) THIS P.A.D. WILL BE CONSIDERED INVALID IF ALTERED BY ANY MEANS.

(d) SITE SPECIFIC PROJECTS SHALL BE PREPARED BY A FLORIDA REGISTERED ENGINEER OR ARCHITECT WHICH WILL BECOME THE ENGINEER OF RECORD (E.O.R.)
FOR THE PROJECT AND WHO WILL BE RESPONSIBLE FOR THE PROPER USE OF THE P.A.D.

(e) THIS P.A.D. SHALL COMPLY WITH SECTION 2:61G15 OF THE FLORIDA ADMINISTRATIVE CODE.

11. SHUTTER MANUFACTURER'S LABEL SHALL BE PLACED ON THE EXPOSED SURFACE OF THE SIDE RAIL APPROXIMATELY 4" ABOVE THE BOTTOM OF SUCH RAIL. LABEL SHALL READ AS FOLLOWS:
QMI
ITASCA, ILLINOIS.
MIAMI–DADE COUNTY PRODUCT CONTROL APPROVED.

PRODUCT RENEWED
as complying with the Florida
Building Code
Acceptance No 05-0623.05
Expiration Date 11/08/11
By
Miami Dade Product Control
Division

F.B.C. (High Velocity Hurricane Zone)

MAY 12 2006

© 2005 TILTECO INC.

TILTECO INC.
TILLIT TESTING & ENGINEERING COMPANY
6355 N.W. 36th. St., Ste. 305, VIRGINIA GARDENS, Fl. 33166
Phone : (305)871–1530 . Fax : (305)871–1531
e–mail: tilteco@aol.com
EB–0006719
WALTER A. TILLIT Jr. P. E.
FLORIDA Lic. # 44167

55 mm AL3–E SLAT ROLL–UP SHUTTER

QMI ROLL SHUTTER
1661 GLENLAKE AVENUE
ITASCA, ILLINOIS. 60143

REV. No	DESCRIPTION	DATE	REV. No	DESCRIPTION	DATE
1	OLD DWG 02–363	5/4/05	3		
2	COMPANY NAME	5/11/06	4		

DRAWN BY M.C.V. / L.G.
5/4/05 DATE
05–090 DRAWING No
SHEET 1 OF 15

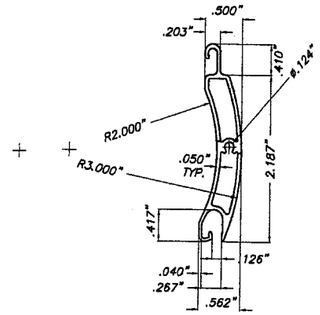

(A) TYPE 1 SLAT
EXTRUDED 55 mm. AL3-E SLAT

6005-T5 Alum. ALLOY
SCALE: 1/2" = 1"

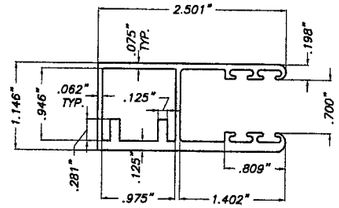

(B1) TYPE 1
WALL MOUNT TRACK
FOR 55 mm. SLAT

QMI - 98
6063-T6 Alum. ALLOY
SCALE: 1/2" = 1"

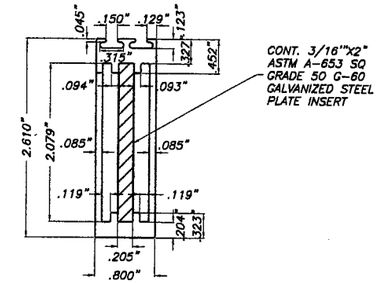

(C1) TYPE 1 STORM BAR

QMI-93
INSERT
6005-T5 Alum. ALLOY
SCALE: 1/2" = 1"

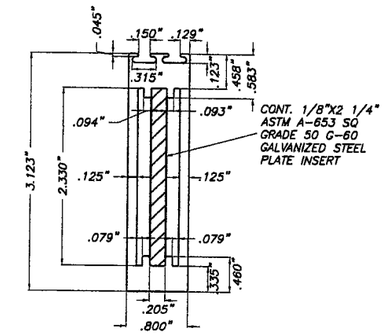

(D1) TYPE 2 STORM BAR

QMI-86
INSERT
6005-T5 Alum. ALLOY
SCALE: 1/2" = 1"

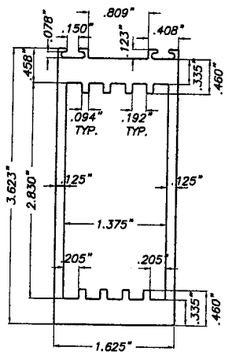

(E) TYPE 3 STORM BAR

QMI-87
6005-T5 Alum. ALLOY
SCALE: 1/2" = 1"

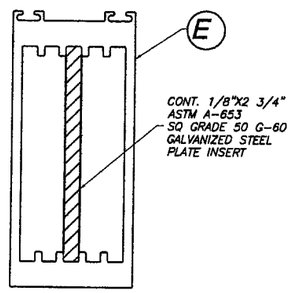

(E1) TYPE 4 STORM BAR

QMI-87
INSERT
6005-T5 Alum. ALLOY
SCALE: 1/2" = 1"

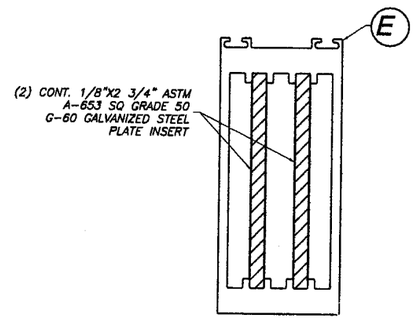

(E2) TYPE 5 STORM BAR

QMI-87
2 INSERTS
6005-T5 Alum. ALLOY
SCALE: 1/2" = 1"

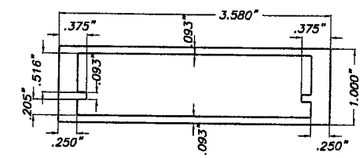

(F) TYPE 1 HEADER

QMI-88
6005-T5 Alum. ALLOY
SCALE: 1/2" = 1"

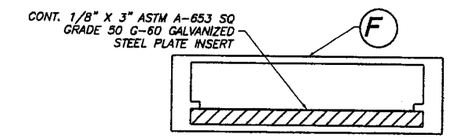

(F1) TYPE 2 HEADER

QMI-88
INSERT
6005-T5 Alum. ALLOY
SCALE: 1/2" = 1"

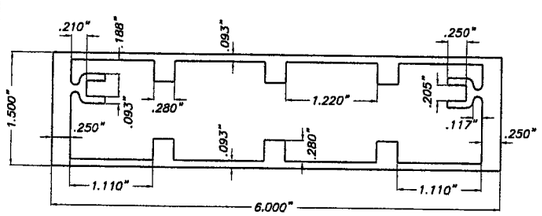

(G) TYPE 3 HEADER

QMI-89
6005-T5 Alum. ALLOY
SCALE: 1/2" = 1"

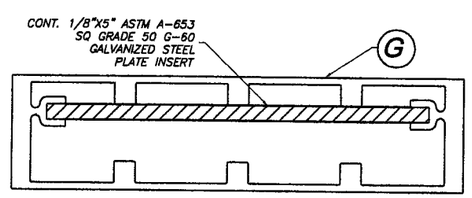

(G1) TYPE 4 HEADER

QMI-89
INSERT
6005-T5 Alum. ALLOY
SCALE: 1/2" = 1"

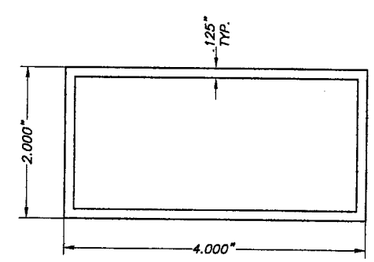

(G2) TYPE 5 HEADER

6063-T6 ALUMINUM ALLOY
SCALE: 1/2" = 1"

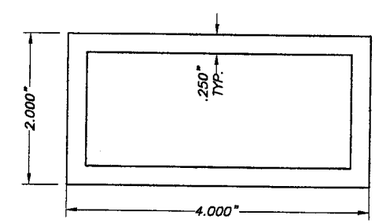

(G3) TYPE 6 HEADER

6063-T6 ALUMINUM ALLOY
SCALE: 1/2" = 1"

PRODUCT RENEWED
as complying with the Florida Building Code
Acceptance No 05-0623.05
Expiration Date 11/08/11
By [signature]
Miami Dade Product Control Division

F.B.C. (High Velocity Hurricane Zone)

© 2005 TILTECO INC.

TILTECO INC.
TILLIT TESTING & ENGINEERING COMPANY
6355 N.W. 36th. St., Ste. 305, VIRGINIA GARDENS, Fl. 33166
Phone : (305)871-1530 . Fax : (305)871-1531
e-mail: tilteco@aol.com
EB-0006719
WALTER A. TILLIT Jr. P. E.
FLORIDA Lic. # 44167

MAY 12 2006

55 mm AL3-E SLAT ROLL-UP SHUTTER

QMI ROLL SHUTTER

1661 GLENLAKE AVENUE
ITASCA, ILLINOIS. 60143

REV. No	DESCRIPTION	DATE	REV. No	DESCRIPTION	DATE
1	OLD DWG 02-363	5/4/05	3		
2	COMPANY NAME	5/11/06	4		

DRAWN BY M.C.V. / L.G.
5/4/05 DATE
05-090 DRAWING No
SHEET 2 OF 15

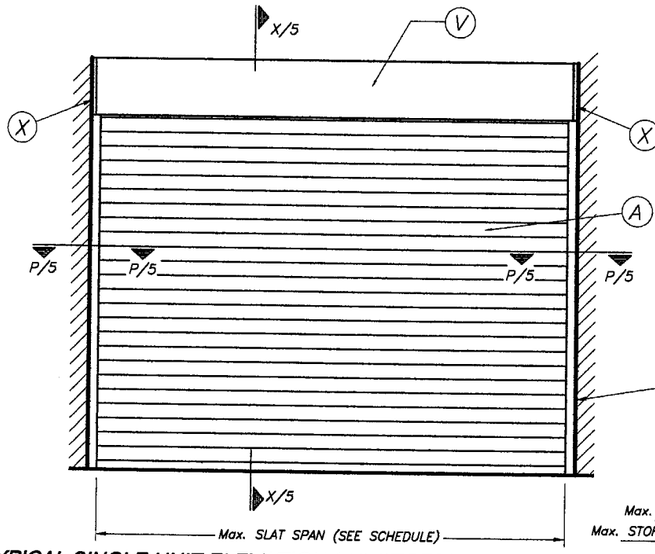

TYPICAL SINGLE UNIT ELEVATION (NO STORM BARS REQUIRED)

NOTE: SEE SHEET 2 , 3 & 4 OF 15 FOR COMPONENTS NOMENCLATURE.

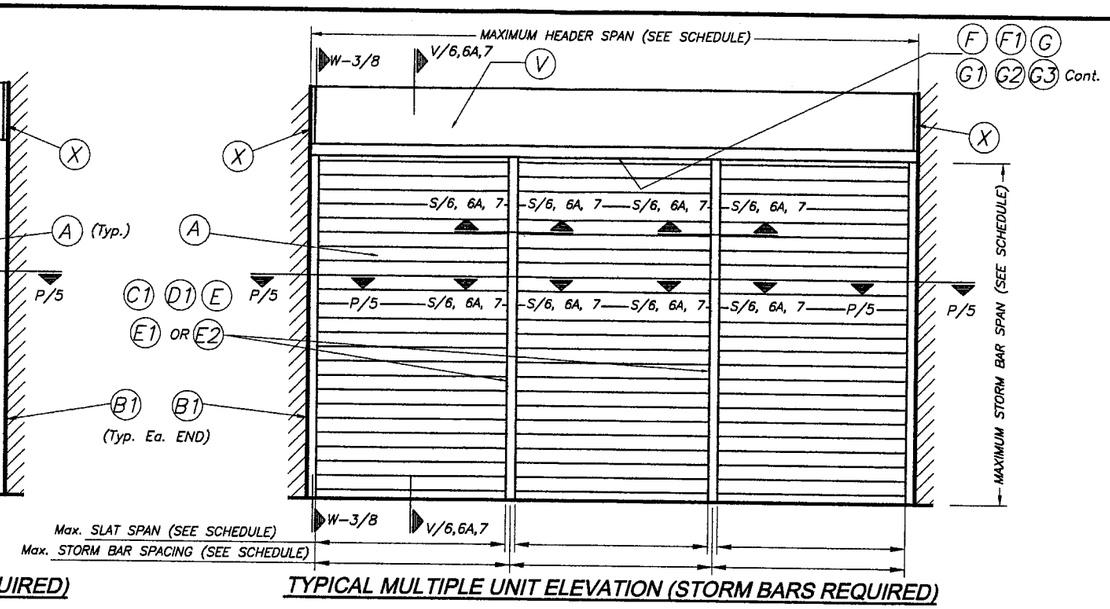

TYPICAL MULTIPLE UNIT ELEVATION (STORM BARS REQUIRED)

NOTE: SEE SHEET 2 , 3 & 4 OF 15 FOR COMPONENTS NOMENCLATURE.

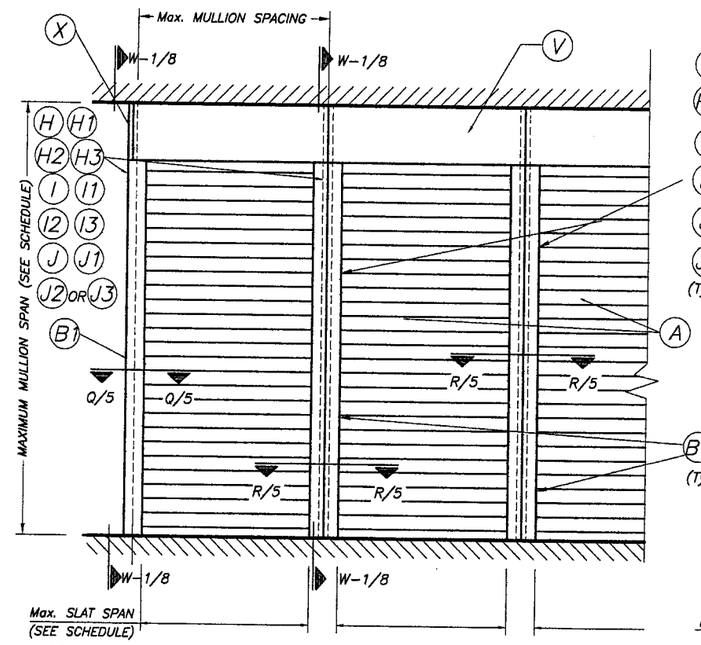

TYPICAL CONSECUTIVE SINGLE UNIT ELEVATION (NO STORM BARS REQUIRED)

NOTE: SEE SHEET 2 , 3 & 4 OF 15 FOR COMPONENTS NOMENCLATURE.

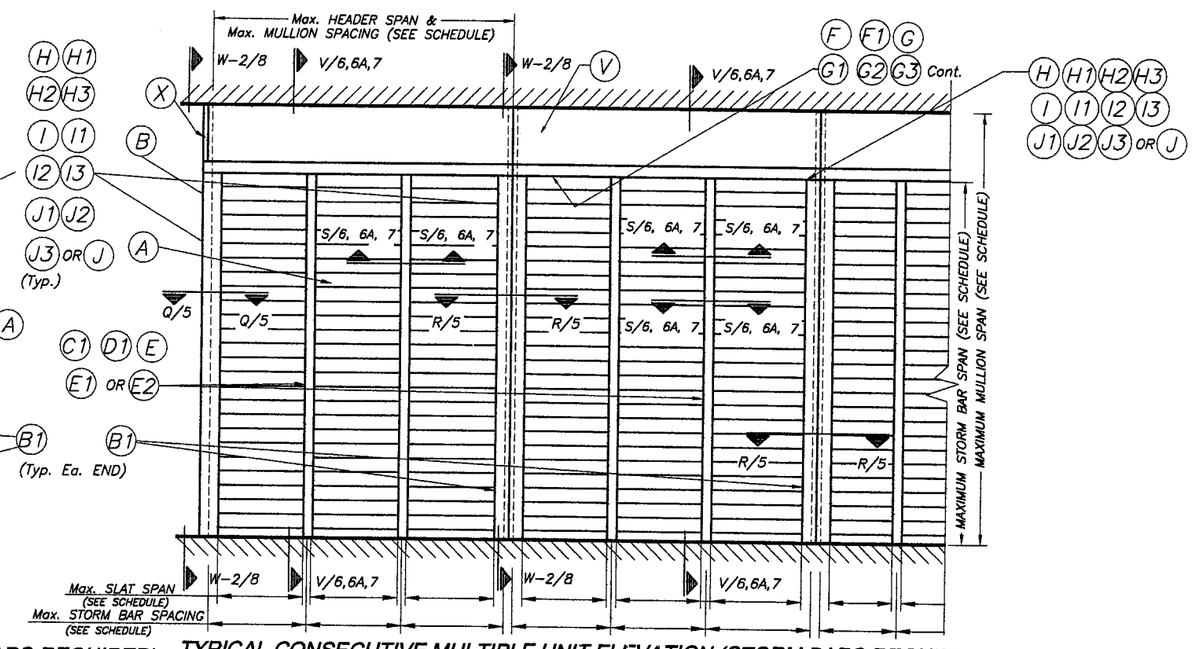

TYPICAL CONSECUTIVE MULTIPLE UNIT ELEVATION (STORM BARS REQUIRED)

NOTE: SEE SHEET 2 , 3 & 4 OF 15 FOR COMPONENTS NOMENCLATURE.

PRODUCT RENEWED
as complying with the Florida Building Code
Acceptance No 05-0623.05
Expiration Date 11/08/11
By
Miami Dade Product Control Division

F.B.C. (High Velocity Hurricane Zone)

MAY 12 2006

© 2005 TILTECO INC.

TILTECO INC.
TILLIT TESTING & ENGINEERING COMPANY
6355 N.W. 36th. St., Ste. 305, VIRGINIA GARDENS, FL. 33166
Phone : (305)871-1530 . Fax : (305)871-1531
e-mail: tilteco@aol.com
EB-0006719
WALTER A. TILLIT Jr. P. E.
FLORIDA Lic. # 44167

55 mm AL3-E SLAT ROLL-UP SHUTTER

QMI ROLL SHUTTER

1661 GLENLAKE AVENUE
ITASCA, ILLINOIS. 60143

REV. No	DESCRIPTION	DATE	REV. No	DESCRIPTION	DATE
1	OLD DWG 02-363	5/4/05	3		
2	COMPANY NAME	5/11/06	4		

DRAWN BY M.C.V. / L.G.

5/4/05 DATE

05-090 DRAWING No

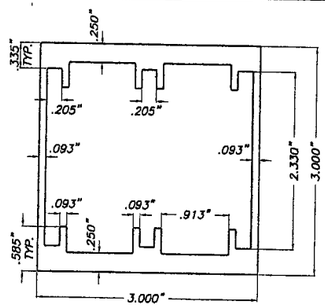

(H) TYPE 1 MULLION

QMI-90
6005-T5 Alum. ALLOY
SCALE: 1/2" = 1"

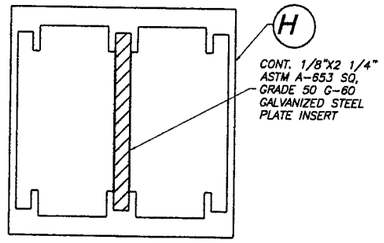

(H1) TYPE 2 MULLION

QMI-90
INSERT
6005-T5 Alum. ALLOY
SCALE: 1/2" = 1"

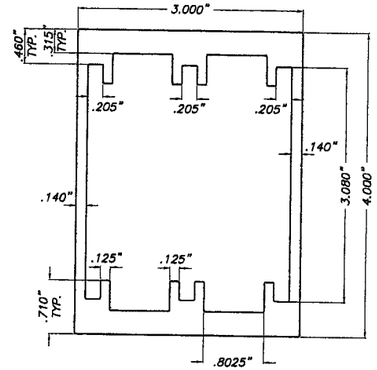

(I) TYPE 5 MULLION

QMI-91
6005-T5 Alum. ALLOY
SCALE: 1/2" = 1"

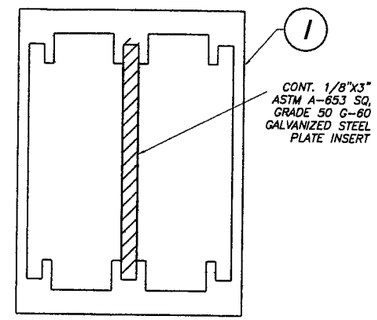

(I1) TYPE 6 MULLION

QMI-91
INSERT
6005-T5 Alum. ALLOY
SCALE: 1/2" = 1"

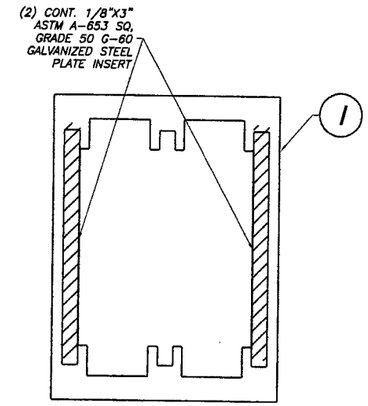

(I2) TYPE 7 MULLION

QMI-91
INSERT
6005-T5 Alum. ALLOY
SCALE: 1/2" = 1"

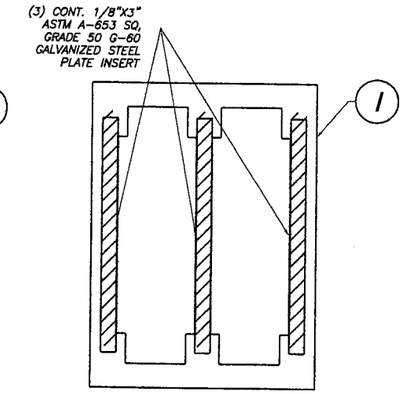

(I3) TYPE 8 MULLION

QMI-91
INSERT
6005-T5 Alum. ALLOY
SCALE: 1/2" = 1"

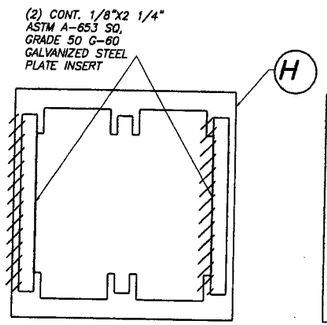

(H2) TYPE 3 MULLION

QMI-90
INSERT
6005-T5 Alum. ALLOY
SCALE: 1/2" = 1"

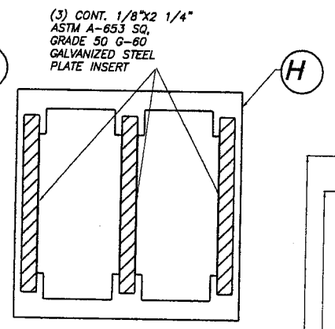

(H3) TYPE 4 MULLION

QMI-90
INSERT
6005-T5 Alum. ALLOY
SCALE: 1/2" = 1"

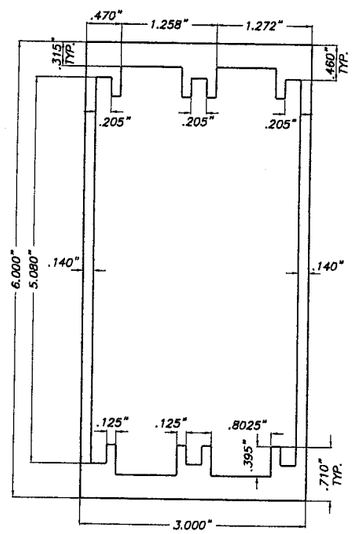

(J) TYPE 9 MULLION

QMI-92
6005-T5 Alum. ALLOY
SCALE: 1/2" = 1"

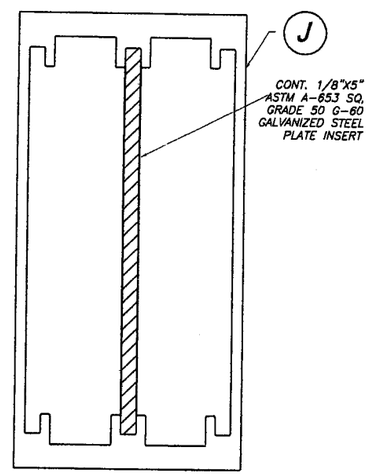

(J1) TYPE 10 MULLION

QMI-92
INSERT
6005-T5 Alum. ALLOY
SCALE: 1/2" = 1"

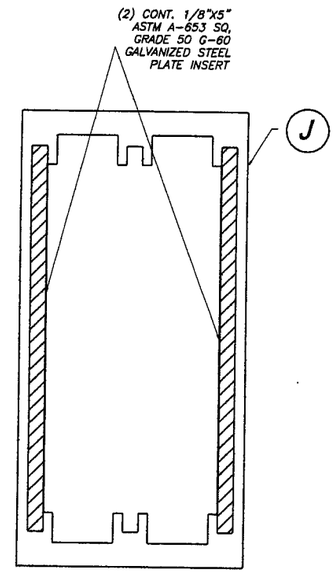

(J2) TYPE 11 MULLION

QMI-92
INSERT
6005-T5 Alum. ALLOY
SCALE: 1/2" = 1"

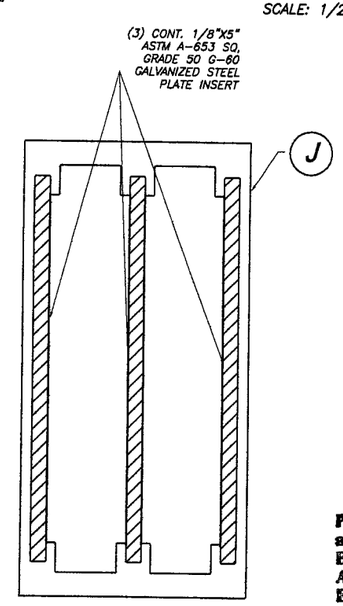

(J3) TYPE 12 MULLION

QMI-92
INSERT
6005-T5 Alum. ALLOY
SCALE: 1/2" = 1"

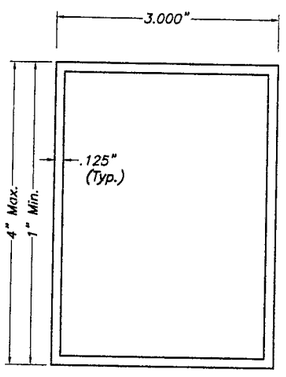

(K) BUILD-OUT TUBES

3"x EXTRUDED TUBE
6063-T5 ALUMINUM ALLOY
SCALE: 1/2" = 1"

PRODUCT RENEWED
as complying with the Florida Building Code
Acceptance No 05-0623.05
Expiration Date 11/08/11
By _____
Miami-Dade Product Control Division

F.B.C. (High Velocity Hurricane Zone)

© 2005 TILTECO INC.

TILTECO INC.
TILLIT TESTING & ENGINEERING COMPANY
6355 N.W. 36th. St., Ste. 305, VIRGINIA GARDENS, Fl. 33166
Phone : (305)871-1530 . Fax : (305)871-1531
e-mail: tilteco@aol.com
EB-0006719
WALTER A. TILLIT Jr. P. E.
FLORIDA Lic. # 44167

MAY 12 2006

55 mm AL3-E SLAT ROLL-UP SHUTTER

QMI ROLL SHUTTER

1661 GLENLAKE AVENUE
ITASCA, ILLINOIS. 60143

REV. No	DESCRIPTION	DATE	REV. No	DESCRIPTION	DATE
1	OLD DWG 02-363	5/4/05	3		
2	COMPANY NAME	5/11/06	4		

DRAWN BY M.C.V. / L.G.
5/4/05 DATE
05-090 DRAWING No
SHEET 3 OF 15

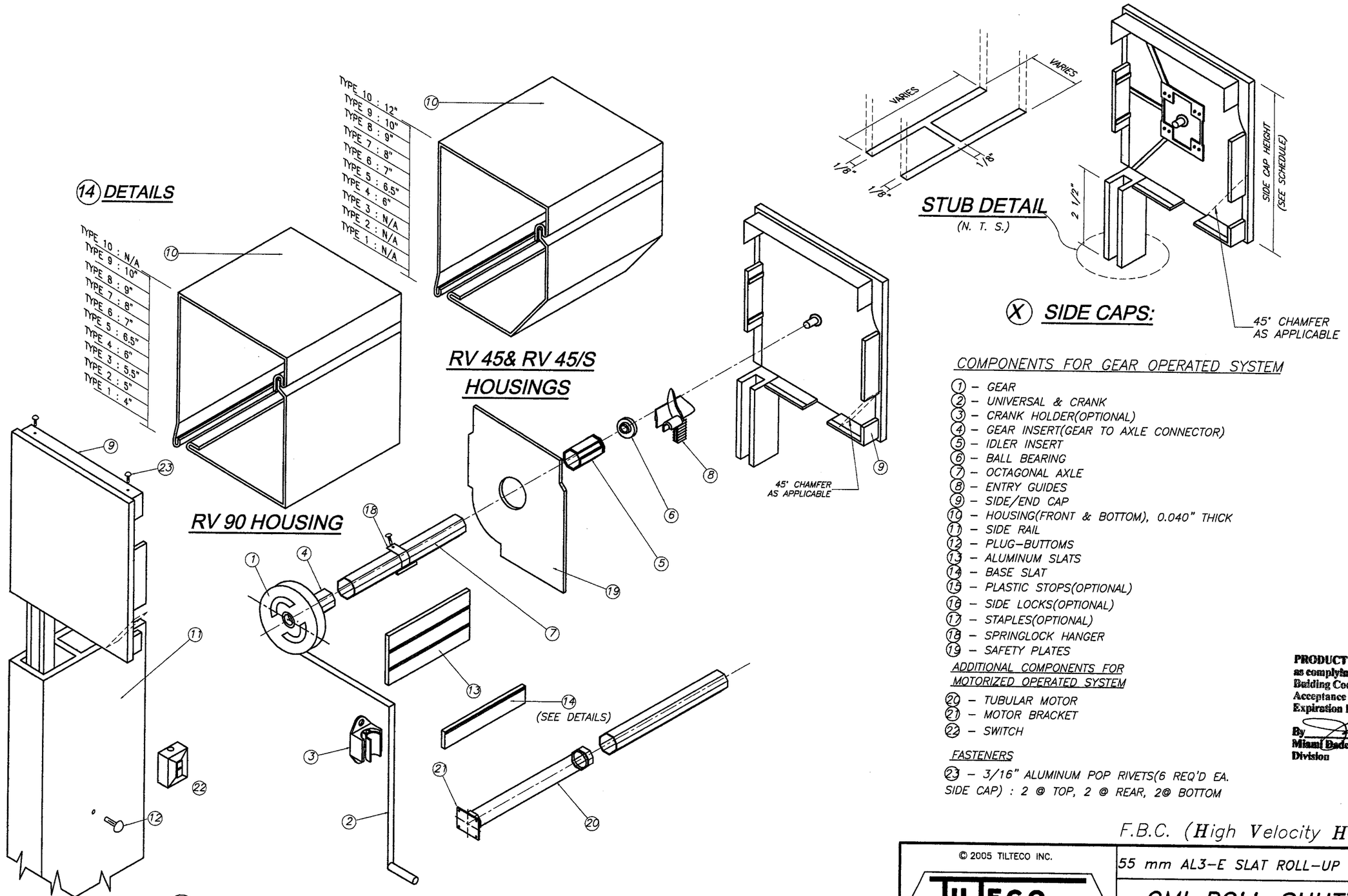

COMPONENTS FOR GEAR OPERATED SYSTEM

1 – GEAR
2 – UNIVERSAL & CRANK
3 – CRANK HOLDER(OPTIONAL)
4 – GEAR INSERT(GEAR TO AXLE CONNECTOR)
5 – IDLER INSERT
6 – BALL BEARING
7 – OCTAGONAL AXLE
8 – ENTRY GUIDES
9 – SIDE/END CAP
10 – HOUSING(FRONT & BOTTOM), 0.040" THICK
11 – SIDE RAIL
12 – PLUG–BUTTOMS
13 – ALUMINUM SLATS
14 – BASE SLAT
15 – PLASTIC STOPS(OPTIONAL)
16 – SIDE LOCKS(OPTIONAL)
17 – STAPLES(OPTIONAL)
18 – SPRINGLOCK HANGER
19 – SAFETY PLATES

ADDITIONAL COMPONENTS FOR MOTORIZED OPERATED SYSTEM

20 – TUBULAR MOTOR
21 – MOTOR BRACKET
22 – SWITCH

FASTENERS

23 – 3/16" ALUMINUM POP RIVETS(6 REQ'D EA. SIDE CAP) : 2 @ TOP, 2 @ REAR, 2@ BOTTOM

PRODUCT RENEWED
as complying with the Florida Building Code
Acceptance No 05-0623.05
Expiration Date 11/08/11
By
Miami Dade Product Control Division

F.B.C. (High Velocity Hurricane Zone)

MAY 12 2006

© 2005 TILTECO INC.

TILTECO INC.
TILLIT TESTING & ENGINEERING COMPANY
6355 N.W. 36th. St., Ste. 305, VIRGINIA GARDENS, Fl. 33166
Phone : (305)871-1530 . Fax : (305)871-1531
e-mail: tilteco@aol.com
EB-0006719
WALTER A. TILLIT Jr. P. E.
FLORIDA Lic. # 44167

55 mm AL3-E SLAT ROLL-UP SHUTTER

QMI ROLL SHUTTER

1661 GLENLAKE AVENUE
ITASCA, ILLINOIS. 60143

REV. No	DESCRIPTION	DATE	REV. No	DESCRIPTION	DATE
1	OLD DWG 02-363	5/4/05	3		
2	COMPANY NAME	5/11/06	4		

DRAWN BY M.C.V. / L.G.

5/4/05 DATE

05-090 DRAWING No

SHEET 4 OF 15

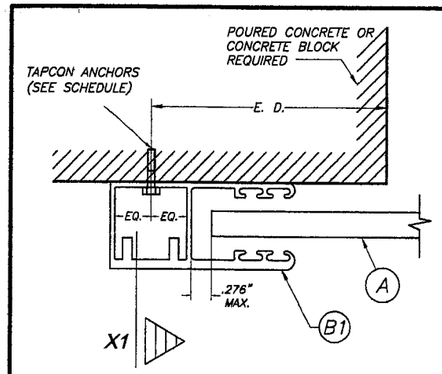

SECTION P - P (1) : WALL MOUNT

SCALE: 1/2" = 1"

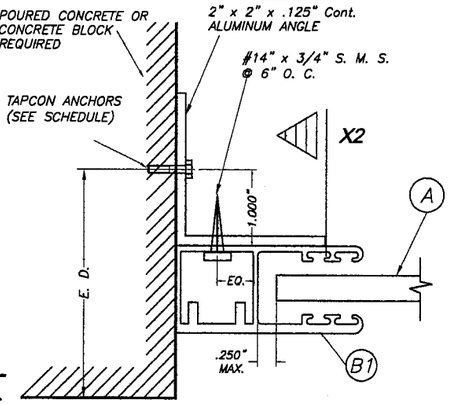

SECTION P - P (2) : SIDE WALL MOUNT

SCALE: 1/2" = 1"

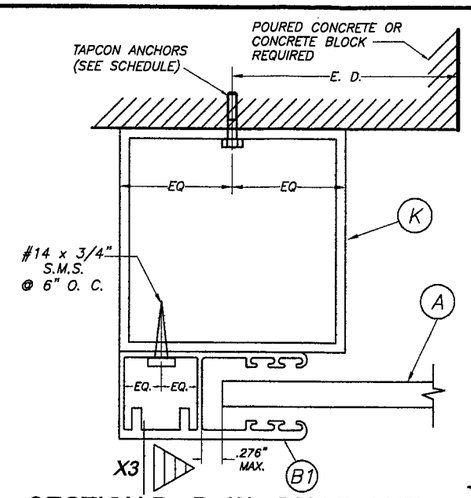

SECTION P - P (3) : BUILD-OUT

SCALE: 1/2" = 1"

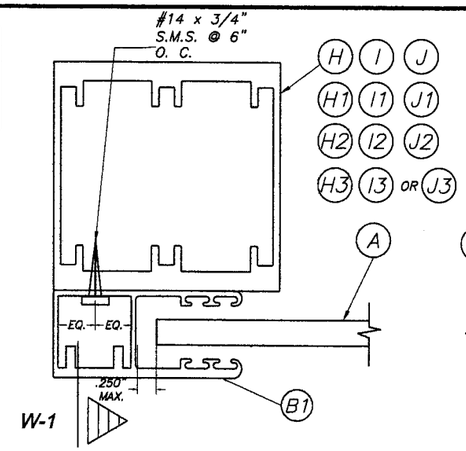

SECTION Q - Q : MULLION MOUNT

SCALE: 1/2" = 1"

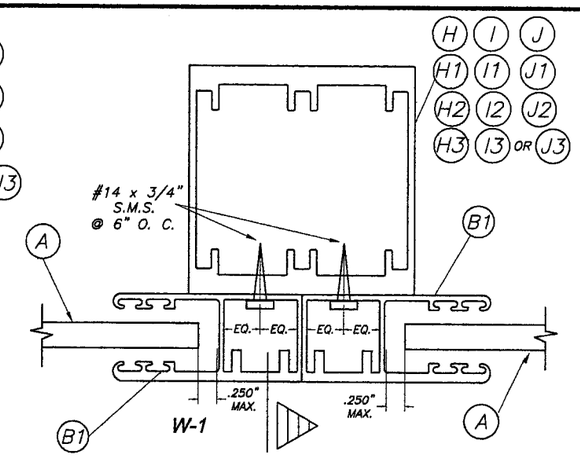

SECTION R - R : MULLION MOUNT

SCALE: 1/2" = 1"

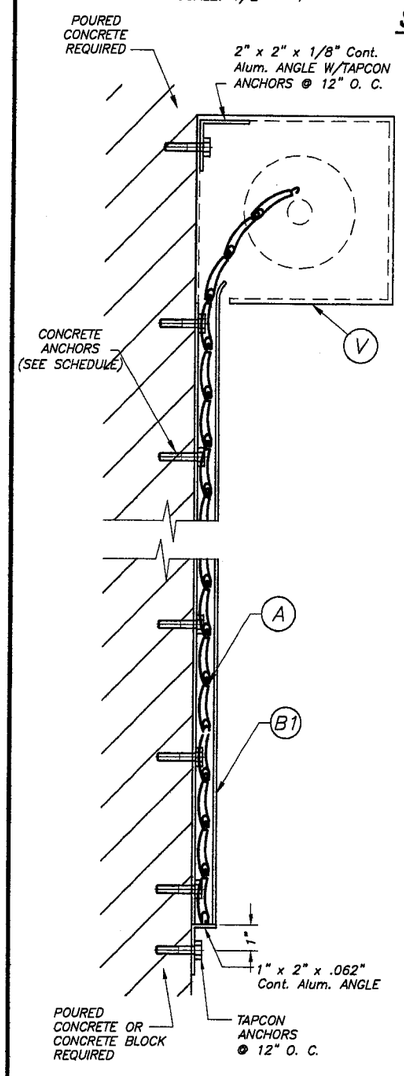

SECTION X - X (1)

N. T. S.

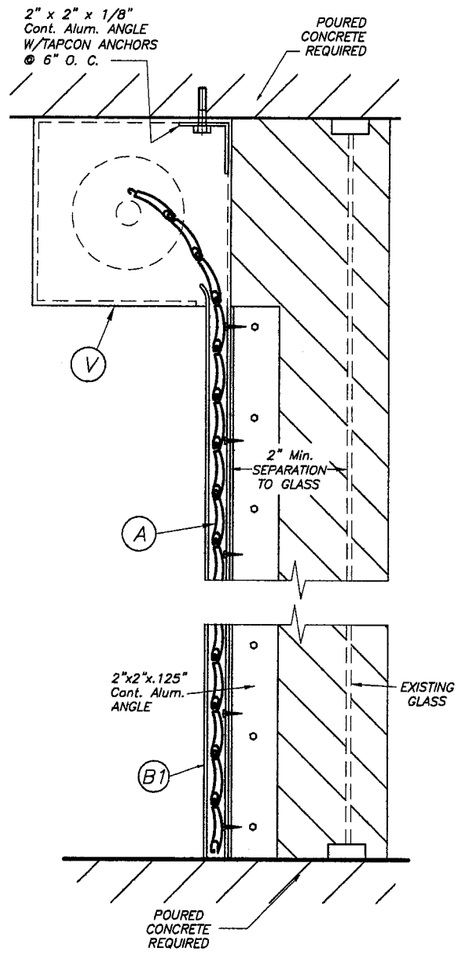

SECTION X -X (2)

N. T. S.

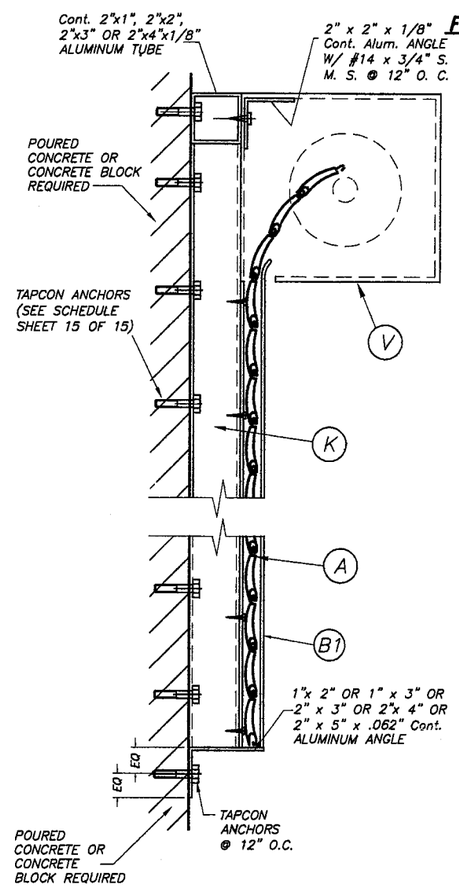

SECTION X - X (3)

N. T. S.

SIDE RAIL ANCHOR SCHEDULE
MAXIMUM DESIGN PRESSURE RATING "W" (p. s. f.) AND CORRESPONDING MAXIMUM ANCHOR SPACING(in) * FOR SIDE RAIL (B1) CONNECTION TO CONCRETE OR MASONRY WALLS.

(USE MAXIMUM VALUES BETWEEN POSITIVE AND NEGATIVE LOAD).

MAXIMUM DESIGN LOAD "W" (p.s.f.)		SIDE RAIL (B1)		
		WALL MOUNT	INSIDE MOUNT	BUILD-OUT MOUNT
80 OR LESS	MASONRY	6"	5"	6"
	CONCRETE	6"	6"	6"
>80 TO 150	MASONRY	4"	3"	6"
	CONCRETE	6"	6"	6"
>160 TO 195	MASONRY	3 1/2"	3"	6"
	CONCRETE	6"	6"	6"

* MAXIMUM ANCHOR SPACINGS ARE VALID FOR 3 1/2" EDGE DISTANCE. FOR E. D. LESS THAN 3 1/2", REDUCE ANCHOR SPACING BY MULTIPLYING SPACING SHOWN ON SCHEDULE BY THE FOLLOWING FACTORS.
FOR THIS OPERATION TO BE POSSIBLE, REDUCED SPACING OBTAINED USING FACTOR SHALL NOT BE LESS THAN 3" O.C.

ACTUAL E. D.	FACTOR
3"	.86
2 1/2"	.71
2"	.50

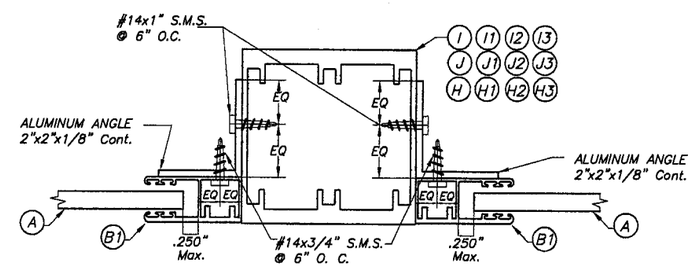

SECTION R - R : MULLION MOUNT (INSIDE MOUNT)

N.T.S.

PRODUCT RENEWED
as complying with the Florida Building Code
Acceptance No 05-0623.05
Expiration Date 11/08/11
By
Miami-Dade Product Control Division

F.B.C. (High Velocity Hurricane Zone)

© 2005 TILTECO INC.

TILTECO INC.
TILLIT TESTING & ENGINEERING COMPANY
6355 N.W. 36th. St., Ste. 305, VIRGINIA GARDENS, FL. 33166
Phone : (305)871-1530 . Fax : (305)871-1531
e-mail: tilteco@aol.com
EB-0006719
WALTER A. TILLIT Jr. P. E.
FLORIDA Lic. # 44167

MAY 12 2006

55 mm AL3-E SLAT ROLL-UP SHUTTER

QMI ROLL SHUTTER

1661 GLENLAKE AVENUE
ITASCA, ILLINOIS. 60143

REV. No	DESCRIPTION	DATE	REV. No	DESCRIPTION	DATE
1	OLD DWG 02-363	5/4/05	3		
2	COMPANY NAME	5/11/06	4		

DRAWN BY M.C.V. / L.G.

5/4/05 DATE

05-090 DRAWING No

SHEET 5 OF 15

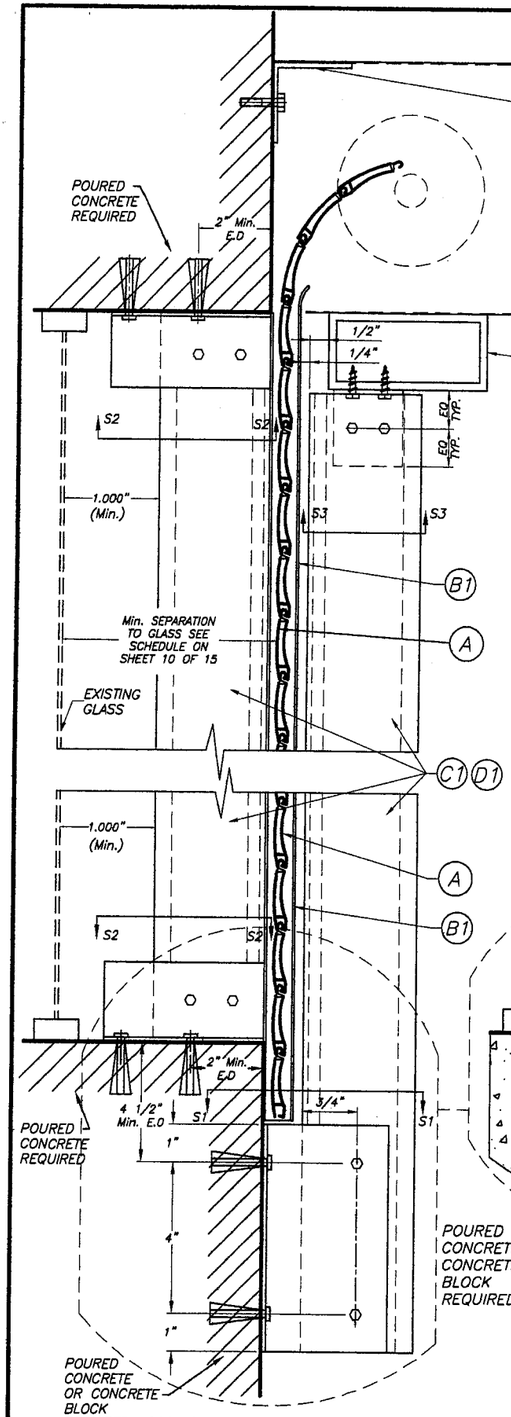

WALL MOUNTING : SECTION V–V(1)

SCALE : 1/4" = 1"

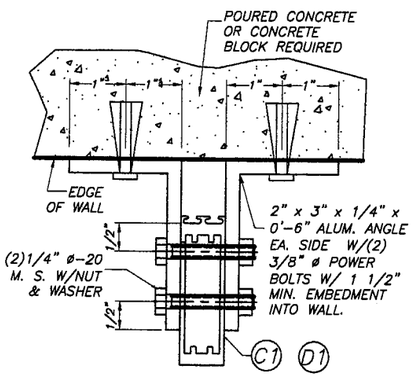

SECTION S1 – S1

SCALE : 3/8" = 1"

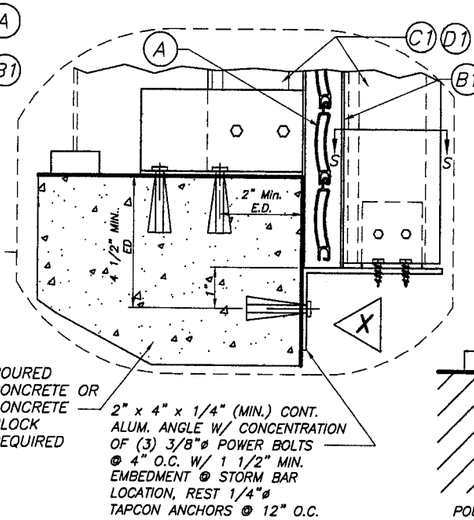

OPTIONAL FRONT STORM BAR CONNECTION

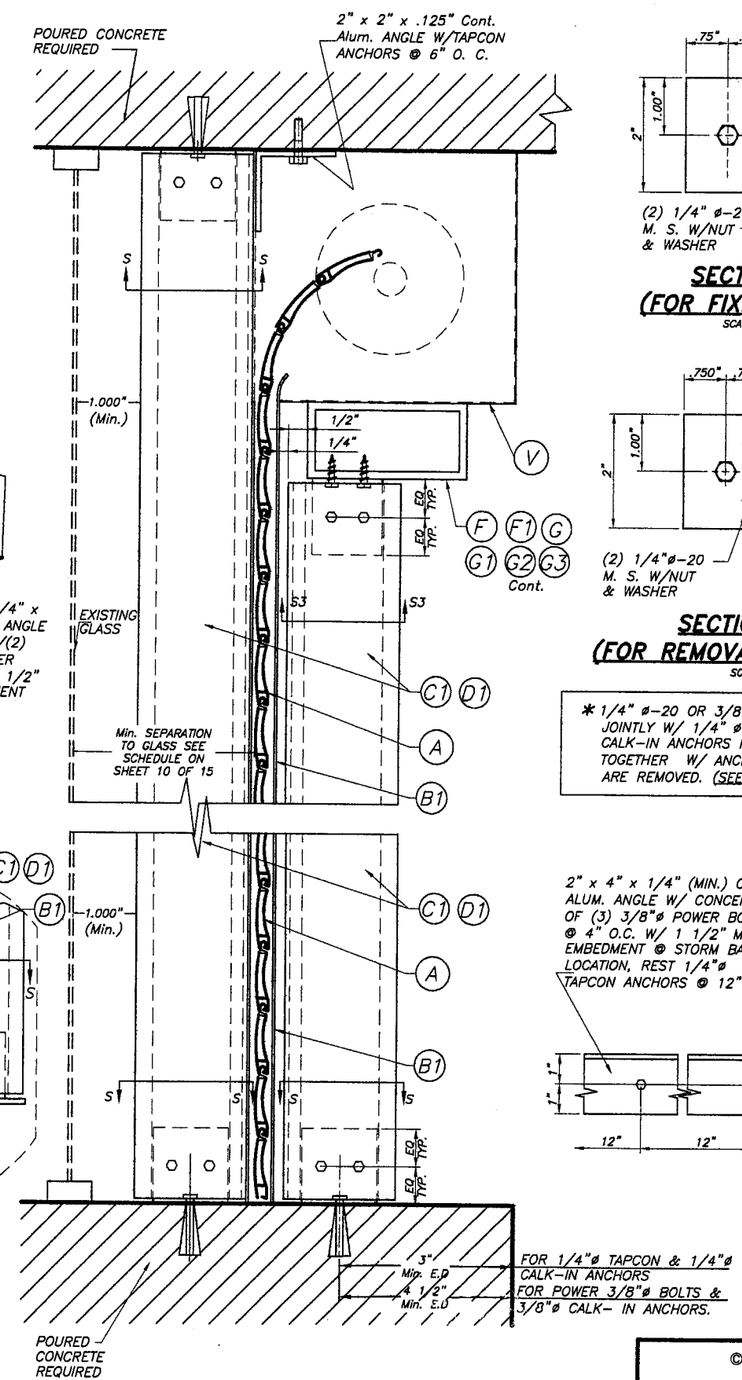

CEILING & FLOOR MOUNTING : SECTION V–V(2)

SCALE : 1/4" = 1"

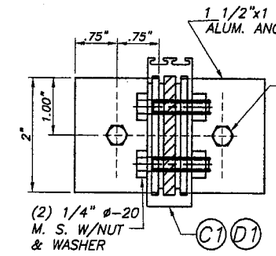

SECTION S – S (FOR FIXED STORM BAR)

SCALE : 3/8" = 1"

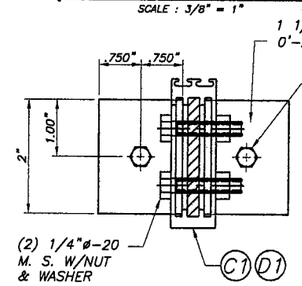

SECTION S – S (FOR REMOVABLE STORM BAR)

SCALE : 3/8" = 1"

* 1/4" ø–20 OR 3/8" ø–16 MACHINE SCREWS USED JOINTLY W/ 1/4" ø x 7/8" OR 3/8" ø x 1 1/4" CALK–IN ANCHORS RESPECTIVELY SHALL BE LEFT TOGETHER W/ ANCHORS AT THE TIME STORM BARS ARE REMOVED. (SEE DETAIL A)

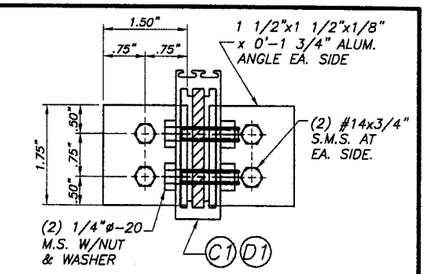

SECTION S3 – S3 (HEADER CONNECTION)

SCALE : 3/8" = 1"

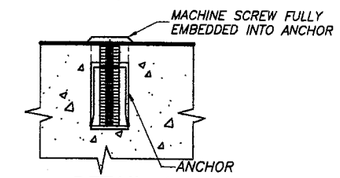

DETAIL A

SCALE : 1/2" = 1"

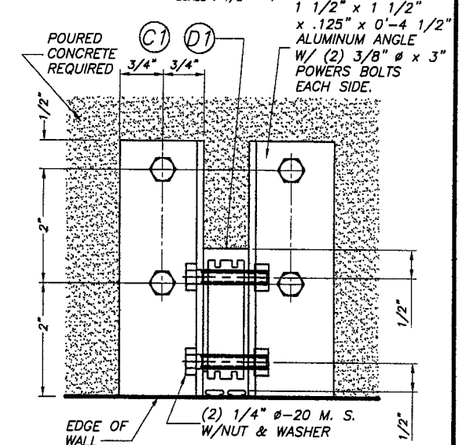

SECTION S2–S2

SCALE : 3/8" = 1"

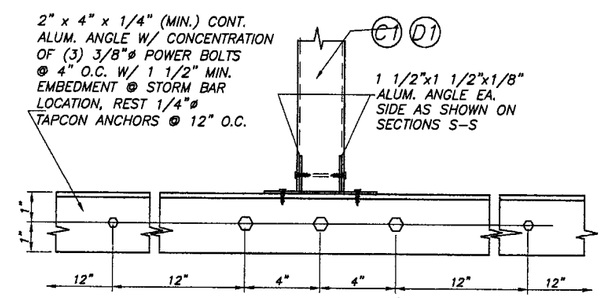

ELEVATION X

SCALE : 1/8" = 1"

NOTE:
SINGLE SPAN SECTIONS AND DETAILS ARE SIMILAR TO ABOVE SHOWN WITHOUT STORM BAR & HEADERS.

PRODUCT RENEWED
as complying with the Florida Building Code
Acceptance No. 05-0623.05
Expiration Date 11/08/11
By [signature]
Miami-Dade Product Control Division

F.B.C. (High Velocity Hurricane Zone)

© 2005 TILTECO INC.

TILTECO INC.
TILLIT TESTING & ENGINEERING COMPANY
6355 N.W. 36th. St., Ste. 305, VIRGINIA GARDENS, Fl. 33166
Phone : (305)871–1530 , Fax : (305)871–1531
e–mail: tilteco@aol.com
EB–0006719
WALTER A. TILLIT Jr. P. E.
FLORIDA Lic. # 44167

MAY 12 2006

55 mm AL3–E SLAT ROLL–UP SHUTTER

QMI ROLL SHUTTER

1661 GLENLAKE AVENUE
ITASCA, ILLINOIS. 60143

REV. No	DESCRIPTION	DATE	REV. No	DESCRIPTION	DATE
1	OLD DWG 02–363	5/4/05	3		
2	COMPANY NAME	5/11/06	4		

DRAWN BY M.C.V. / L.G.
5/4/05 DATE
05–090 DRAWING No
SHEET 6 OF 15

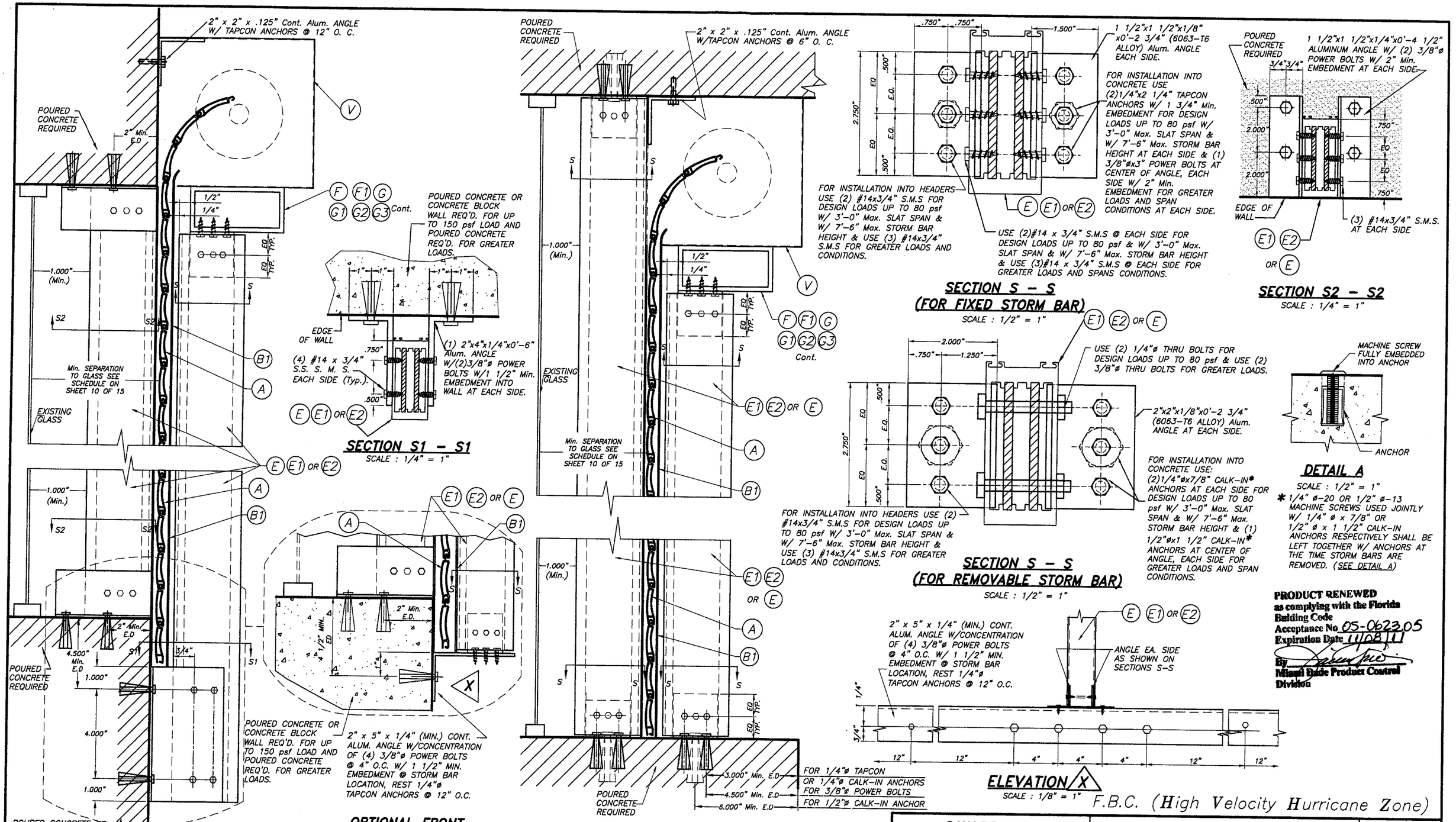

NOTE:
SINGLE SPAN SECTIONS AND DETAILS ARE SIMILAR TO ABOVE SHOWN WITHOUT STORM BAR & HEADERS.

© 2005 TILTECO INC.

TILTECO INC.
TILLIT TESTING & ENGINEERING COMPANY
6355 N.W. 36th. St., Ste. 305, VIRGINIA GARDENS, Fl. 33166
Phone : (305)871-1530 . Fax : (305)871-1531
e-mail: tilteco@aol.com
EB-0006719
WALTER A. TILLIT Jr. P. E.
FLORIDA Lic. # 44167

55 mm AL3-E SLAT ROLL-UP SHUTTER

QMI ROLL SHUTTER

1661 GLENLAKE AVENUE
ITASCA, ILLINOIS. 60143

REV. No	DESCRIPTION	DATE	REV. No	DESCRIPTION	DATE
1	OLD DWG 02-363	5/4/05	3		
2	COMPANY NAME	5/11/06	4		

DRAWN BY M.C.V. / L.G.
5/4/05 DATE
05-090 DRAWING No
SHEET 6A OF 15

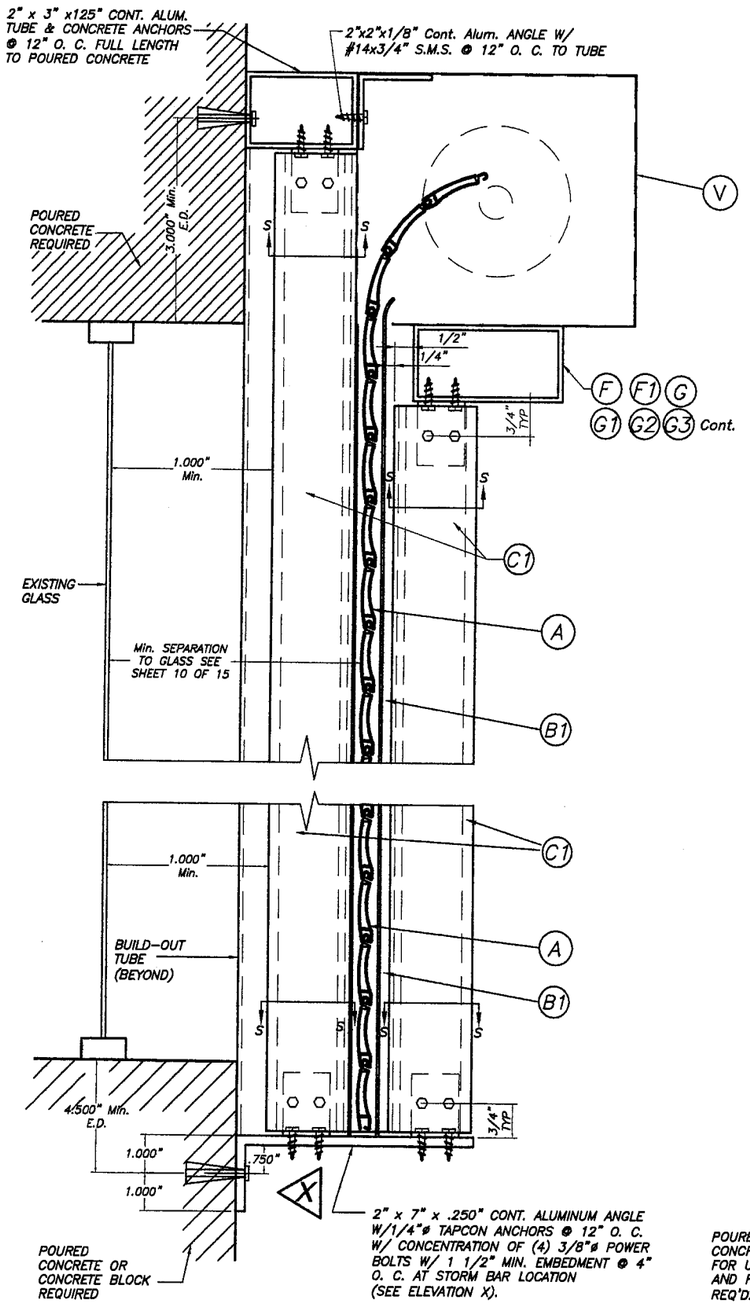

CASE I

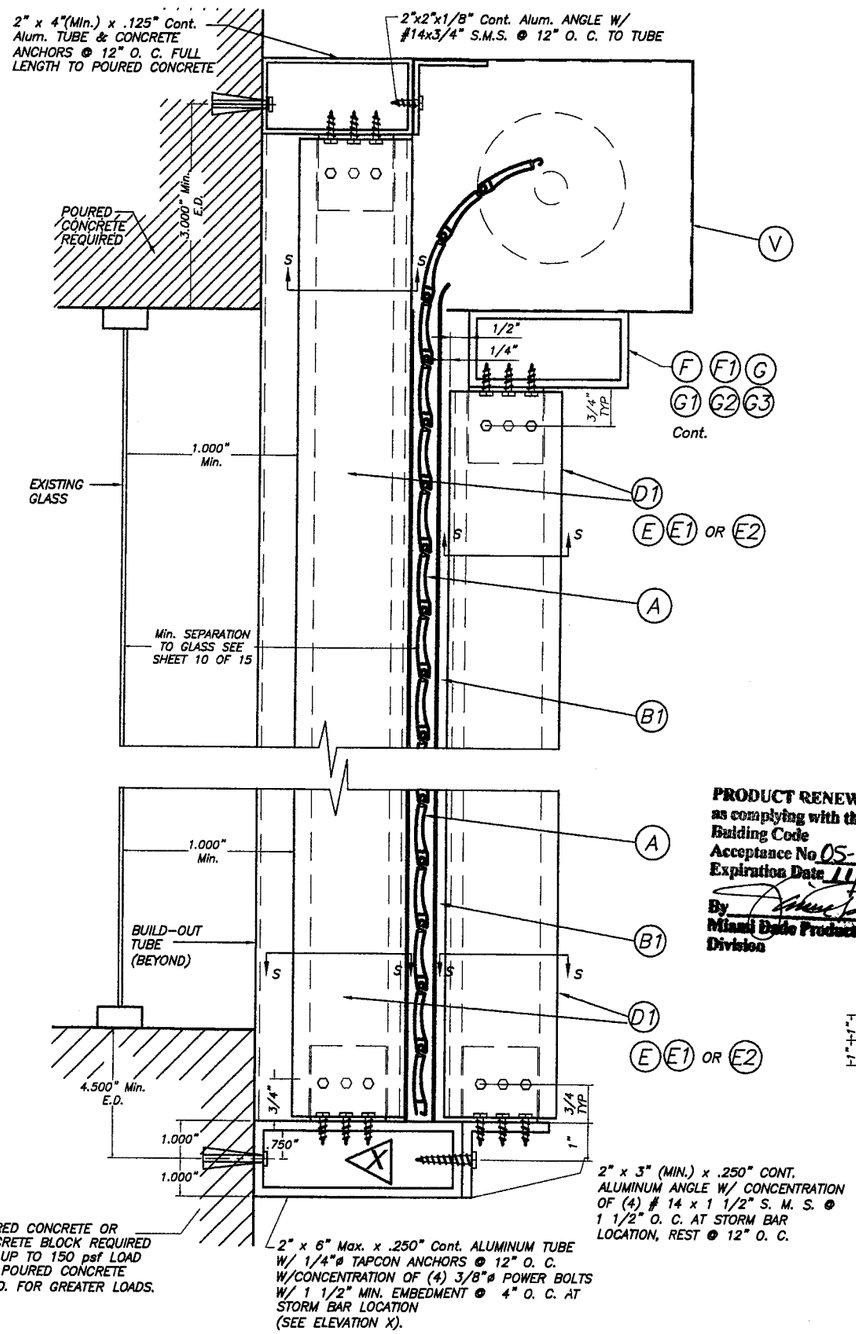

CASE II

STORM BAR CONNECTION AT BUILD-OUT INSTALLATION : SECTIONS V - V (3)

SCALE : 1/4" = 1"

NOTE:
SINGLE SPAN SECTIONS AND DETAILS ARE SIMILAR TO ABOVE SHOWN WITHOUT STORM BAR & HEADERS.

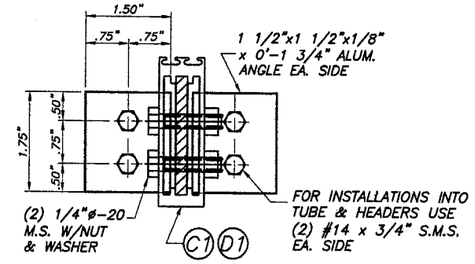

SECTION S - S @ C1 & D1

SCALE : 3/8" = 1"

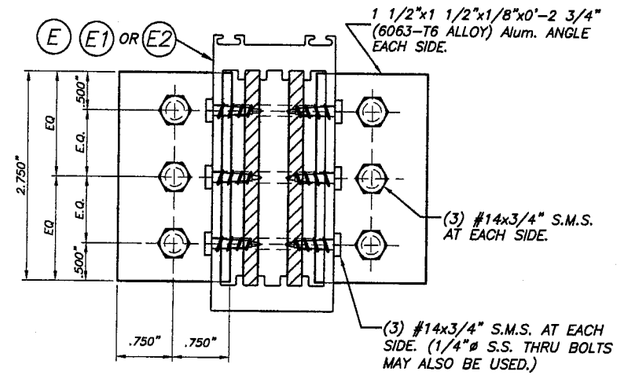

SECTION S - S @ E, E1 & E2

SCALE : 3/8" = 1"

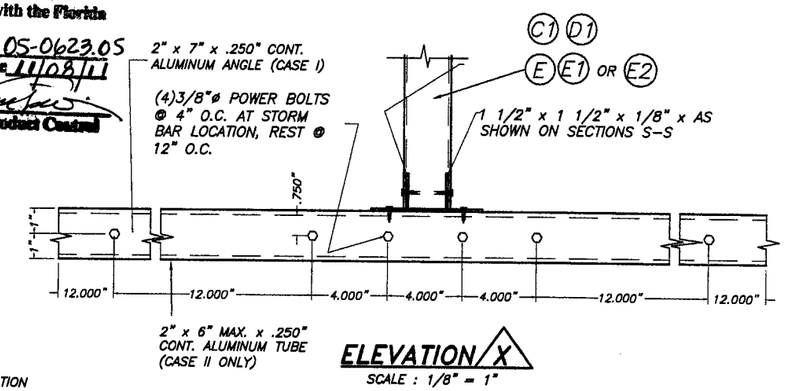

ELEVATION X

SCALE : 1/8" = 1"

PRODUCT RENEWED
as complying with the Florida Building Code
Acceptance No 05-0623.05
Expiration Date 11/08/11
By
Miami Dade Product Control Division

F.B.C. (High Velocity Hurricane Zone)

© 2005 TILTECO INC.

TILTECO INC.
TILLIT TESTING & ENGINEERING COMPANY
6355 N.W. 36th. St., Ste. 305, VIRGINIA GARDENS, Fl. 33166
Phone : (305)871-1530 . Fax : (305)871-1531
e-mail: tilteco@aol.com
EB-0006719
WALTER A. TILLIT Jr. P. E.
FLORIDA Lic. # 44167

MAY 1 2 2006

55 mm AL3-E SLAT ROLL-UP SHUTTER

QMI ROLL SHUTTER

1661 GLENLAKE AVENUE
ITASCA, ILLINOIS. 60143

REV. No	DESCRIPTION	DATE	REV. No	DESCRIPTION	DATE
1	OLD DWG 02-363	5/4/05	3		
2	COMPANY NAME	5/11/06	4		

DRAWN BY M.C.V. / L.G.
5/4/05 DATE
05-090 DRAWING No
SHEET 7 OF 15

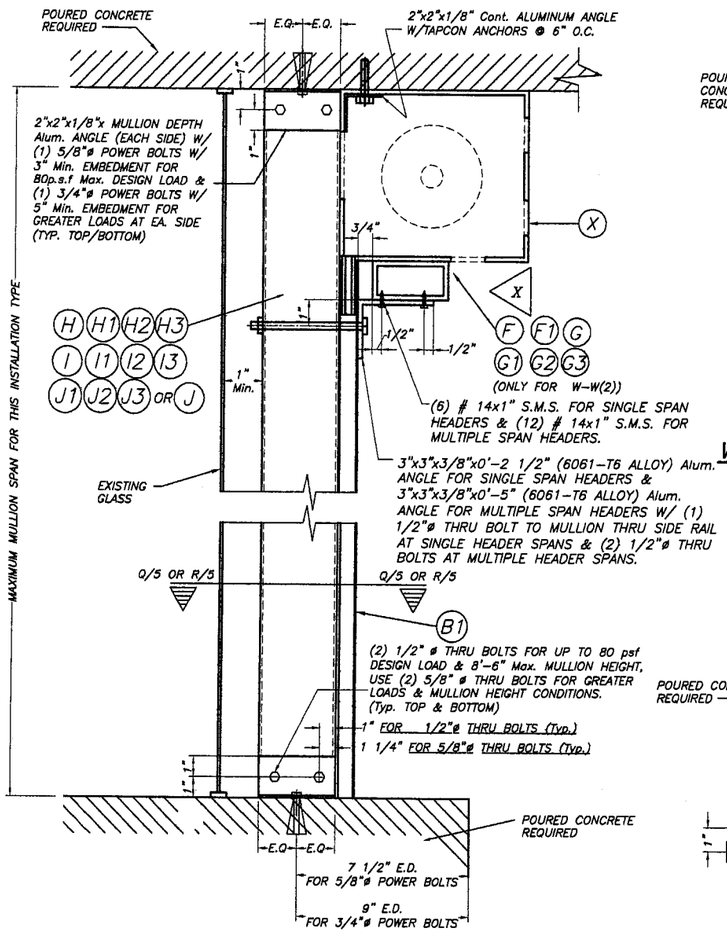

FLOOR/CEILING MOUNTING : SECTION W-W (1), W/O HEADER SECTION W-W (2), W/HEADER

SCALE : 1/8" = 1"

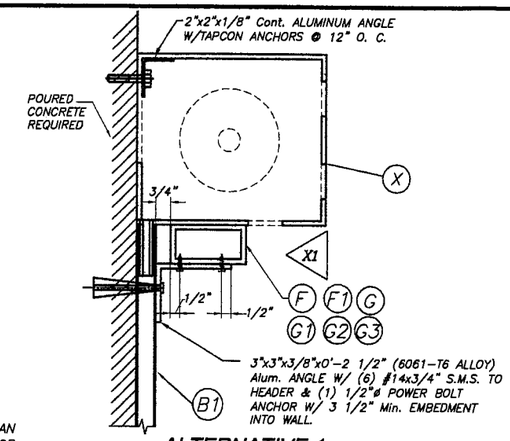

ALTERNATIVE 1 WALL MOUNTING : SECTION W-W(3) *

SCALE : 1/8" = 1"

*LIMITED UP TO 60 psf Max. DESIGN LOAD

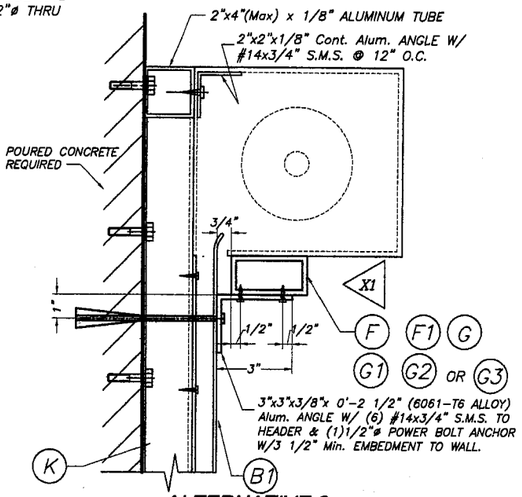

ALTERNATIVE 2 WALL MOUNTING : SECTION W-W(3) *

SCALE : 1/8" = 1"

*LIMITED UP TO 60 psf Max. DESIGN LOAD

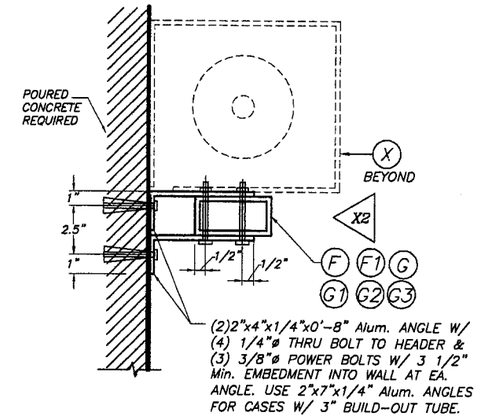

ALTERNATIVE 3 WALL MOUNTING : SECTION W-W(3) W/O LIMITATIONS

SCALE : 1/8" = 1"

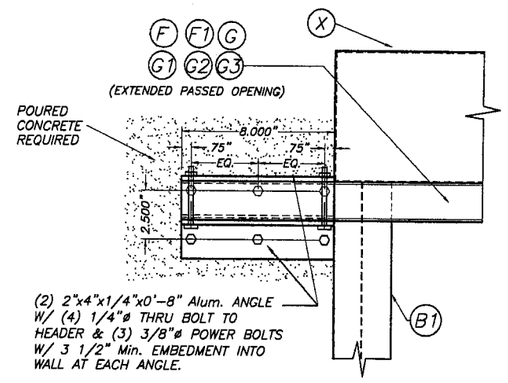

ELEVATION X2

SCALE : 1/8" = 1"

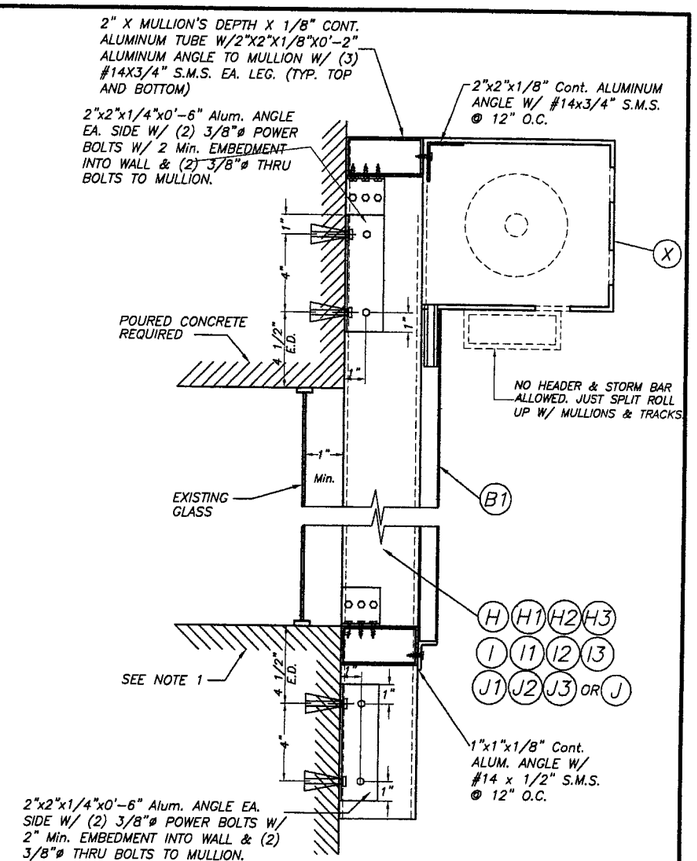

WALL MOUNTING : MULLION CONNECTION AT TOP & BOTTOM : SECTION W-W (1)

SCALE : 1/8" = 1"

NOTE 1 :
EXISTING WALL MAY BE POURED CONCRETE OR CONCRETE BLOCK FOR DESIGN LOADS UP TO 80.0 psf W/9'-0" MAX. MULLION HEIGHT AND SHALL BE POURED CONCRETE OR CONCRETE FILLED BLOCKS FOR GREATER LOADS AND SPAN CONDITIONS.

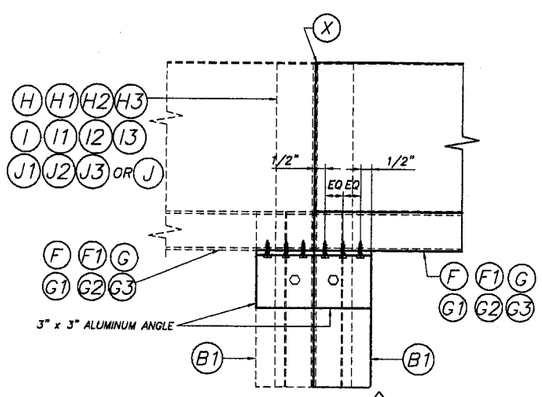

ELEVATION X

SCALE : 1/8" = 1"

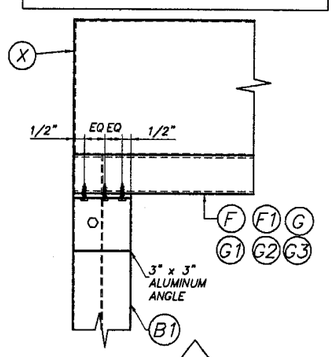

ELEVATION X1

SCALE : 1/8" = 1"

TYPICAL HEADER CONNECTION AT ENDS: SECTIONS W-W

PRODUCT RENEWED as complying with the Florida Building Code Acceptance No. 05-0623.05 Expiration Date 11/08/11 By Miami-Dade Product Control Division

F.B.C. (High Velocity Hurricane Zone)

MAY 13 2006

© 2005 TILTECO INC.

TILTECO INC.
TILLIT TESTING & ENGINEERING COMPANY
6355 N.W. 36th. St., Ste. 305, VIRGINIA GARDENS, Fl. 33166
Phone : (305)871-1530 . Fax : (305)871-1531
e-mail: tilteco@aol.com
EB-0006719
WALTER A. TILLIT Jr. P. E.
FLORIDA Lic. # 44167

55 mm AL3-E SLAT ROLL-UP SHUTTER

QMI ROLL SHUTTER

1661 GLENLAKE AVENUE
ITASCA, ILLINOIS. 60143

REV. No	DESCRIPTION	DATE	REV. No	DESCRIPTION	DATE
1	OLD DWG 02-363	5/4/05	3		
2	COMPANY NAME	5/11/06	4		

DRAWN BY M.C.V. / L.G.

5/4/05 DATE

05-090 DRAWING No

SHEET 8 OF 15

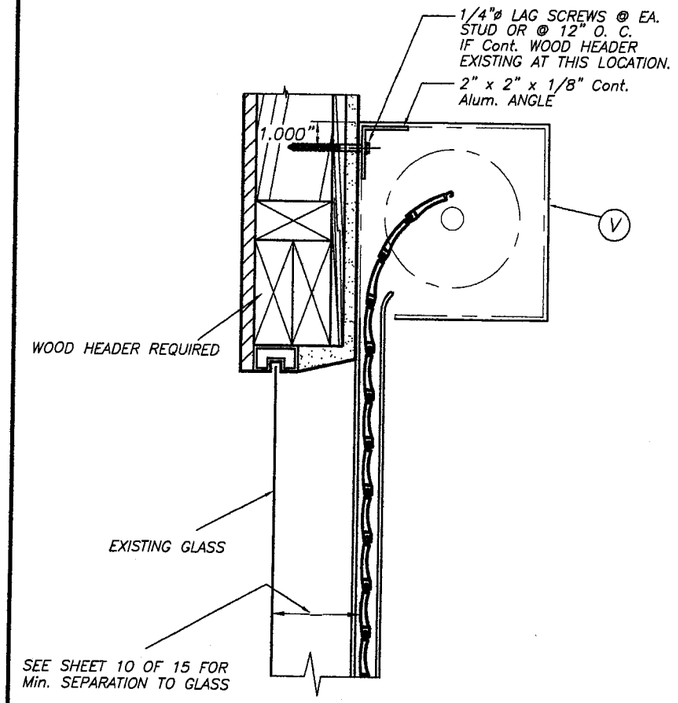

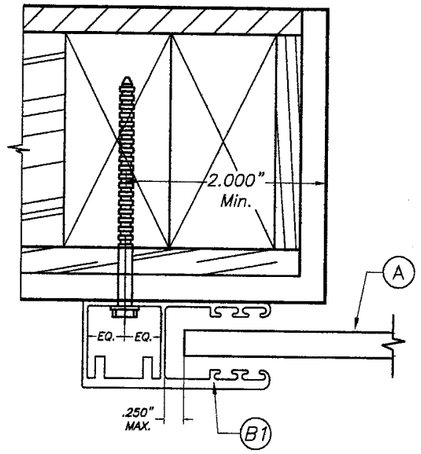

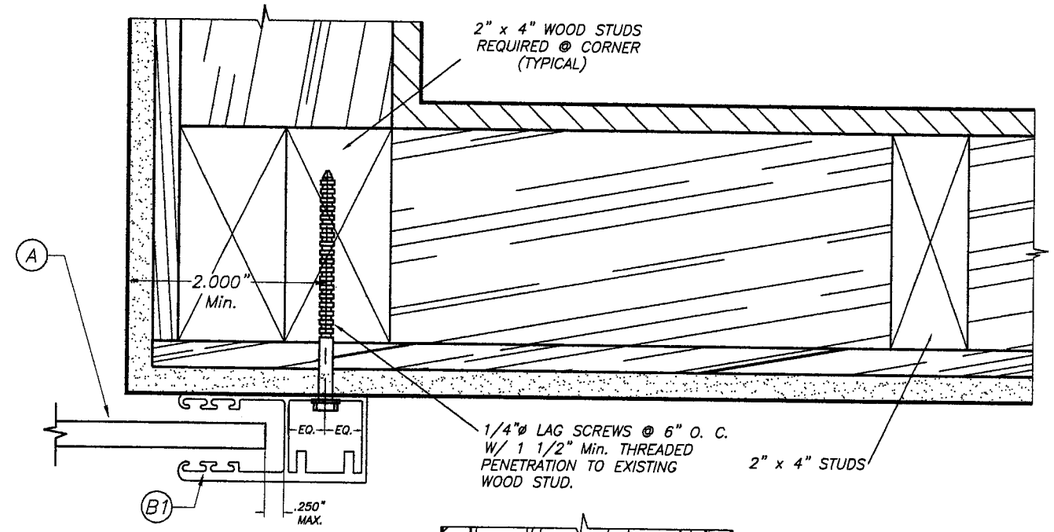

PLAN A (SECTION)

WALL MOUNT

SCALE : 3/8" = 1"

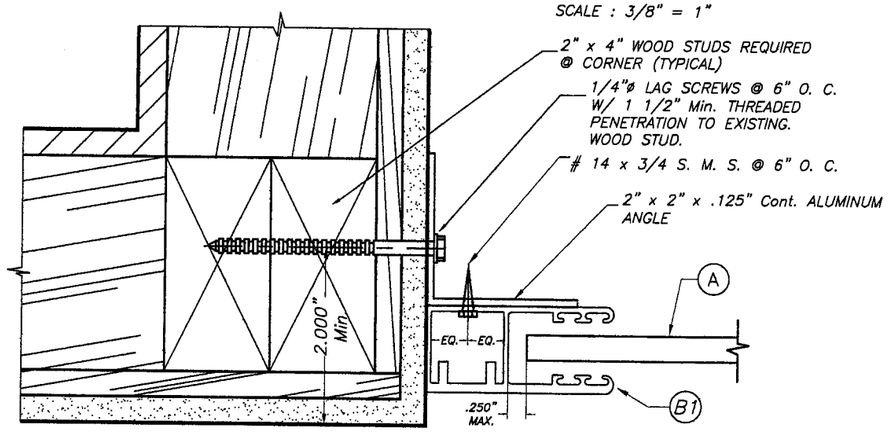

PLAN B (SECTION)

INSIDE MOUNT

SCALE : 3/8" = 1"

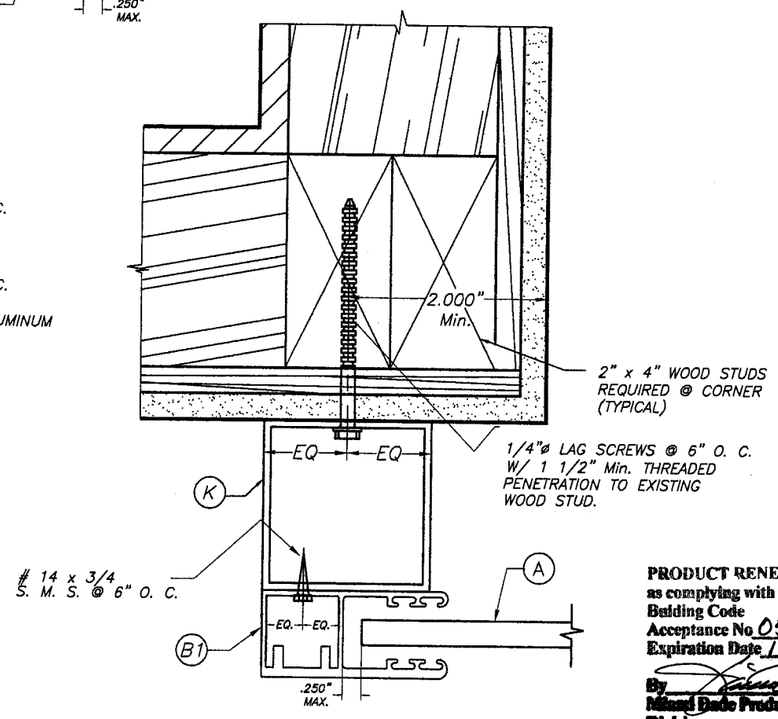

PLAN C (SECTION)

BUILD-OUT

SCALE : 3/8" = 1"

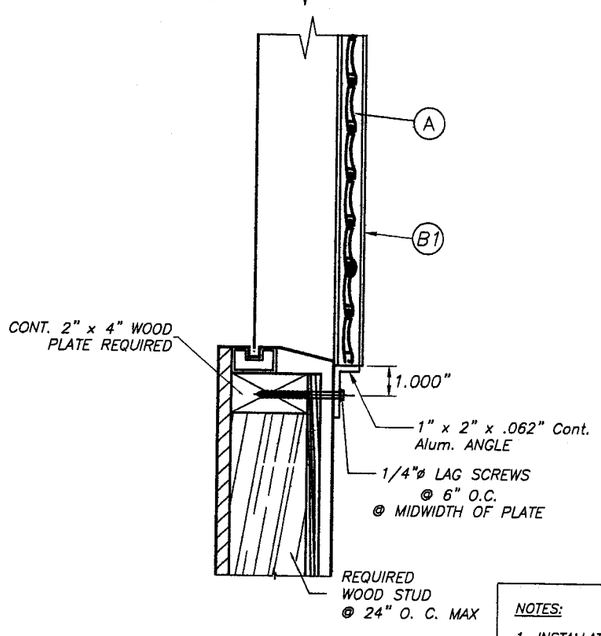

WALL MOUNTING INSTALLATION

SINGLE SPAN CONDITION

N. T. S.

NOTES:

1. INSTALLATIONS ARE ONLY VALID FOR BUILDINGS WITH DESIGN LOAD UP TO 80 p.s.f.
2. FOR NEW FRAME CONSTRUCTION: WOOD MEMBER TO BE SOUTHERN PINE No. 2 W/ SPECIFIC DENSITY OF 0.55 OR EQUAL.
3. MINIMUM PENETRATION OF LAG SCREWS INTO WOOD MEMBER TO BE 1 1/2".

PRODUCT RENEWED
as complying with the Florida Building Code
Acceptance No. 05-0623.05
Expiration Date 11/08/11
By
Miami Dade Product Control Division

F.B.C. (High Velocity Hurricane Zone)

MAY 12 2006

© 2005 TILTECO INC.

TILTECO INC.
TILLIT TESTING & ENGINEERING COMPANY
6355 N.W. 36th. St., Ste. 305, VIRGINIA GARDENS, Fl. 33166
Phone : (305)871-1530 . Fax : (305)871-1531
e-mail: tilteco@aol.com
EB-0006719
WALTER A. TILLIT Jr. P. E.
FLORIDA Lic. # 44167

55 mm AL3-E SLAT ROLL-UP SHUTTER

QMI ROLL SHUTTER

1661 GLENLAKE AVENUE
ITASCA, ILLINOIS. 60143

REV. No	DESCRIPTION	DATE	REV. No	DESCRIPTION	DATE
1	OLD DWG 02-363	5/4/05	3		
2	COMPANY NAME	5/11/06	4		

DRAWN BY M.C.V. / L.G.

5/4/05 DATE

05-090 DRAWING No

SHEET 9 OF 15

SLAT PERFORMANCE CHART
MAXIMUM DESIGN PRESSURE RATING "W" (p. s. f.) AND CORRESPONDING MAXIMUM SLAT SPAN "L"

(USE MAXIMUM VALUES BETWEEN POSITIVE AND NEGATIVE LOAD)

DESIGN LOAD "W" (p.s.f.)	TYPE 1 SLAT (A) 55 mm Extruded Slat		
	MAXIMUM SLAT SPAN	MINIMUM SEPARATION TO GLASS	MINIMUM SEPARATION TO GLASS
	SINGLE & MULTIPLE UNIT *	SINGLE & MULTIPLE UNIT **	SINGLE & MULTIPLE UNIT ***
40.0	6'–0"	3 1/4"	3"
45.0	5'–10"	3 1/4"	3"
50.0	5'–8"	3 1/4"	3"
55.0	5'–6"	3 1/4"	3"
60.0	5'–5"	3 1/4"	3"
65.0	5'–3"	3 1/4"	3"
70.0.	5'–2"	3 1/4"	3"
75.0	5'–1"	3 1/4"	3"
80.0	5'–0"	3"	3"
85.0	4'–11"	3"	3"
90.0	4'–10"	3"	3"
95.0	4'–9"	3"	3"
100.0	4'–8"	3"	3"
105.0	4'–7"	3"	3"
110.0	4'–6"	3"	3"
115.0	4'–5"	3"	3"
120.0	4'–5"	3"	3"
125.0	4'–4"	3"	3"
130.0	4'–3"	3"	3"
135.0	4'–3"	3"	3"
140.0	4'–2"	3"	3"
145.0	4'–1"	3"	3"
150.0	4'–1"	3"	3"
155.0	4'–0"	3"	3"
160.0.	3'–11"	3"	3"
165.0	3'–11"	3"	3"
170.0	3'–10"	3"	3"
175.0	3'–9"	3"	3"
180.0	3'–9"	3"	3"
185.0	3'–8"	3"	3"
190.0	3'–7"	3"	3"
195.0	3'–7"	3"	3"

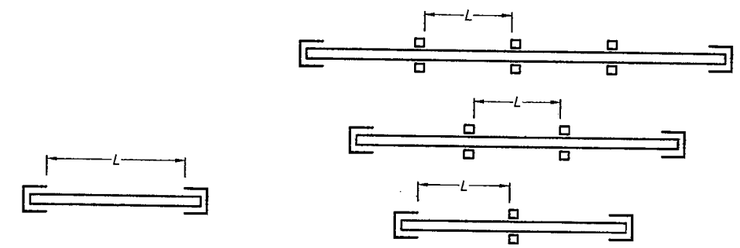

SINGLE SPAN

MULTIPLE SPAN

SPAN LAYOUT

* SPANS VALID FOR EVERY INSTALLATION LOCATED AT ANY ELEVATION OF BUILDING MEASURED AT BOTTOM OF SHUTTER. MINIMUM SEPARATION TO GLASS FOR SINGLE AND MULTIPLE UNITS SHALL BE MEASURED FROM BACK OF SLAT TO GLASS.

** MINIMUM SEPARATION TO GLASS FOR SHUTTERS INSTALLED WITHIN THE FIRST 30'–0" ELEVATION OF BUILDING AND MAXIMUM SPAN.

*** MINIMUM SEPARATION TO GLASS FOR SHUTTERS INSTALLED ABOVE 30'–0" ELEVATION OF BUILDING, MEASURED AT BOTTOM OF SHUTTER.

NOTE : THE TOTAL SLAT DEFLECTION AFTER ADDING THE DEFLECTION OF THE HEADER AND/OR THE STORM BAR SHALL NOT EXCEED A MAXIMUM OF 2" OR L/30 IN THE POSITIVE DIRECTION AND A MAXIMUM OF L/30 IN THE NEGATIVE DIRECTION.

PRODUCT RENEWED
as complying with the Florida Building Code
Acceptance No 05-0623.05
Expiration Date 11/08/11
By
Miami-Dade Product Control Division

F.B.C. (High Velocity Hurricane Zone)

© 2005 TILTECO INC.

TILTECO INC.
TILLIT TESTING & ENGINEERING COMPANY
6355 N.W. 36th. St., Ste. 305, VIRGINIA GARDENS, Fl. 33166
Phone : (305)871–1530 . Fax : (305)871–1531
e–mail: tilteco@aol.com
EB–0006719
WALTER A. TILLIT Jr. P. E.
FLORIDA Lic. # 44167

MAY 12 2006

55 mm AL3–E SLAT ROLL–UP SHUTTER

QMI ROLL SHUTTER

1661 GLENLAKE AVENUE
ITASCA, ILLINOIS. 60143

REV. No	DESCRIPTION	DATE	REV. No	DESCRIPTION	DATE
1	OLD DWG 02–363	5/4/05	3		
2	COMPANY NAME	5/11/06	4		

DRAWN BY M.C.V. / L.G.

5/4/05 DATE

05–090 DRAWING No

SHEET 10 OF 15

STORM BAR LOADING CHART

MAXIMUM DESIGN PRESSURE RATING "W" (p. s. f.) AND CORRESPONDING MAXIMUM SPAN "L" FOR A GIVEN TYPE OF STORM BAR AND STORM BAR SPACING FOR INSTALLATION WITH 1 STORM BAR AT FRONT AND 1 AT REAR

(USE MAXIMUM VALUES BETWEEN POSITIVE AND NEGATIVE LOAD)

MAXIMUM DESIGN LOAD "W" (p.s.f.)	TYPE 1 STORM BAR (C1) .8" x 2.610" W/INSERT (QMI-83)				TYPE 2 STORM BAR (D1) .8" x 3.123" W/INSERT (QMI-86)				TYPE 3 STORM BAR (E) 1.625" x 3.623" (QMI-87)				TYPE 4 STORM BAR (E1) 1.625" x 3.623" W/INSERT (QMI-87)				TYPE 5 STORM BAR (E2) 1.625" x 3.623" W/2 INSERTS (QMI-87)			
	STORM BAR SPACING *				STORM BAR SPACING *				STORM BAR SPACING *				STORM BAR SPACING *				STORM BAR SPACING *			
	≤ 3'-0"	3' TO 4'	4' TO 5'	5' TO 6'	≤ 3'-0"	3' TO 4'	4' TO 5'	5' TO 6'	≤ 3'-0"	3' TO 4'	4' TO 5'	5' TO 6'	< 3'-0"	3' TO 4'	4' TO 5'	5' TO 6'	< 3'-0"	3' TO 4'	4' TO 5'	5' TO 6'
40.0 OR LESS	6'-10"	5'-11"	5'-4"	4'-10"	8'-5"	7'-5"	6'-8"	6'-1"	10'-0"	9'-5"	8'-11"	8'-6"	10'-6"	9'-10"	9'-1"	8'-4"	10'-11"	10'-2"	9'-7"	8'-11"
45.0	6'-6"	5'-7"	5'-0"	4'-7"	8'-1"	7'-0"	6'-3"	5'-9"	9'-10"	9'-1"	8'-8"	8'-3"	10'-3"	9'-6"	8'-7"	7'-10"	10'-7"	9'-10"	9'-3"	8'-5"
50.0	6'-2"	5'-4"	4'-9"	4'-4"	7'-8"	6'-8"	5'-11"	5'-5"	9'-7"	8'-11"	8'-5"	8'-0"	9'-11"	9'-1"	8'-2"	7'-5"	10'-4"	9'-7"	8'-9"	8'-0"
55.0	5'-10"	5'-1"	4'-6"	4'-2"	7'-4"	6'-4"	5'-8"	5'-2"	9'-4"	8'-8"	8'-2"	7'-10"	9'-9"	8'-8"	7'-9"	7'-1"	10'-1"	9'-4"	8'-4"	7'-7"
60.0	5'-7"	4'-10"	4'-4"	3'-11"	7'-0"	6'-1"	5'-5"	4'-11"	9'-1"	8'-6"	8'-0"	7'-8"	9'-6"	8'-4"	7'-5"	6'-9"	9'-10"	8'-11"	8'-0"	7'-3"
65.0	5'-5"	4'-8"	4'-2"	3'-10"	6'-9"	5'-10"	5'-3"	4'-9"	8'-11"	8'-4"	7'-10"	7'-6"	9'-3"	8'-0"	7'-2"	6'-6"	9'-8"	8'-7"	7'-8"	7'-0"
70.0	5'-2"	4'-6"	4'-0"	3'-8"	6'-6"	5'-7"	5'-0"	4'-7"	8'-9"	8'-2"	7'-9"	7'-5"	8'-11"	7'-8"	6'-11"	6'-3"	9'-6"	8'-3"	7'-5"	6'-9"
75.0	5'-0"	4'-4"	3'-11"	3'-6"	6'-3"	5'-5"	4'-10"	4'-5"	8'-8"	8'-0"	7'-7"	7'-3"	8'-7"	7'-5"	6'-8"	6'-1"	9'-3"	8'-0"	7'-2"	6'-6"
80.0	4'-10"	4'-2"	3'-9"	3'-5"	6'-1"	5'-3"	4'-8"	4'-4"	8'-6"	7'-11"	7'-6"	7'-2"	8'-4"	7'-2"	6'-5"	5'-11"	8'-11"	7'-9"	6'-11"	6'-4"
85.0	4'-8"	4'-1"	3'-8"	3'-4"	5'-11"	5'-1"	4'-7"	4'-2"	8'-4"	7'-9"	7'-4"	7'-0"	8'-1"	7'-0"	6'-3"	5'-8"	8'-8"	7'-6"	6'-8"	6'-1"
90.0	4'-7"	3'-11"	3'-6"	3'-3"	5'-9"	4'-11"	4'-5"	4'-1"	8'-3"	7'-8"	7'-3"	6'-10"	7'-10"	6'-9"	6'-1"	5'-7"	8'-5"	7'-3"	6'-6"	5'-11"
95.0	4'-5"	3'-10"	3'-5"	3'-2"	5'-7"	4'-10"	4'-4"	3'-11"	8'-2"	7'-7"	7'-2"	6'-8"	7'-8"	6'-7"	5'-11"	5'-5"	8'-2"	7'-1"	6'-4"	5'-10"
100.0	4'-4"	3'-9"	3'-4"	3'-1"	5'-5"	4'-8"	4'-2"	3'-10"	8'-0"	7'-6"	7'-1"	6'-6"	7'-5"	6'-5"	5'-9"	5'-3"	8'-0"	6'-11"	6'-2"	5'-8"
105.0	4'-3"	3'-8"	3'-3"	3'-0"	5'-4"	4'-7"	4'-1"	3'-9"	7'-11"	7'-5"	6'-11"	6'-4"	7'-3"	6'-3"	5'-7"	5'-2"	7'-10"	6'-9"	6'-0"	5'-6"
110.0	4'-2"	3'-7"	3'-2"	2'-11"	5'-2"	4'-6"	4'-0"	3'-8"	7'-10"	7'-4"	6'-9"	6'-2"	7'-1"	6'-2"	5'-6"	5'-0"	7'-7"	6'-7"	5'-11"	5'-5"
115.0	4'-0"	3'-6"	3'-2"	2'-10"	5'-1"	4'-5"	3'-11"	3'-7"	7'-9"	7'-3"	6'-7"	6'-1"	6'-11"	6'-0"	5'-4"	4'-11"	7'-5"	6'-5"	5'-9"	5'-3"
120.0	3'-11"	3'-5"	3'-1"	2'-10"	4'-11"	4'-4"	3'-10"	3'-6"	7'-8"	7'-2"	6'-6"	5'-11"	6'-9"	5'-11"	5'-3"	4'-10"	7'-3"	6'-4"	5'-8"	5'-2"
125.0	3'-11"	3'-4"	3'-0"	2'-9"	4'-10"	4'-2"	3'-9"	3'-5"	7'-7"	7'-1"	6'-4"	5'-10"	6'-8"	5'-9"	5'-2"	4'-8"	7'-2"	6'-2"	5'-6"	5'-1"
130.0	3'-10"	3'-4"	2'-11"	2'-8"	4'-9"	4'-1"	3'-8"	3'-4"	7'-6"	7'-0"	6'-3"	5'-8"	6'-6"	5'-8"	5'-1"	4'-7"	7'-0"	6'-1"	5'-5"	4'-11"
135.0	3'-9"	3'-3"	2'-11"	2'-8"	4'-8"	4'-1"	3'-7"	3'-4"	7'-5"	6'-10"	6'-1"	5'-7"	6'-5"	5'-7"	5'-0"	4'-6"	6'-10"	5'-11"	5'-4"	4'-10"
140.0	3'-8"	3'-2"	2'-10"	2'-7"	4'-7"	4'-0"	3'-7"	3'-3"	7'-5"	6'-9"	6'-0"	5'-6"	6'-3"	5'-5"	4'-10"	4'-5"	6'-9"	5'-10"	5'-3"	4'-9"
145.0	3'-7"	3'-1"	2'-9"	2'-7"	4'-6"	3'-11"	3'-6"	3'-2"	7'-4"	6'-7"	5'-11"	5'-5"	6'-2"	5'-4"	4'-9"	4'-4"	6'-8"	5'-9"	5'-2"	4'-8"
150.0	3'-6"	3'-1"	2'-9"	2'-6"	4'-5"	3'-10"	3'-5"	3'-2"	7'-3"	6'-6"	5'-10"	5'-4"	6'-1"	5'-3"	4'-8"	4'-4"	6'-6"	5'-8"	5'-1"	4'-7"
155.0	3'-6"	3'-0"	2'-8"	2'-6"	4'-4"	3'-9"	3'-5"	3'-1"	7'-2"	6'-5"	5'-8"	5'-2"	6'-0"	5'-2"	4'-8"	4'-3"	6'-5"	5'-7"	5'-0"	4'-6"
160.0	3'-5"	3'-0"	2'-8"	2'-5"	4'-4"	3'-9"	3'-4"	3'-0"	7'-2"	6'-3"	5'-7"	5'-1"	5'-11"	5'-1"	4'-7"	4'-2"	6'-4"	5'-6"	4'-11"	4'-6"
165.0	3'-4"	2'-11"	2'-7"	2'-5"	4'-3"	3'-8"	3'-3"	3'-0"	7'-1"	6'-2"	5'-6"	5'-1"	5'-9"	5'-0"	4'-6"	4'-1"	6'-3"	5'-5"	4'-10"	4'-5"
170.0	3'-4"	2'-11"	2'-7"	2'-4"	4'-2"	3'-7"	3'-3"	2'-11"	7'-0"	6'-1"	5'-5"	5'-0"	5'-8"	4'-11"	4'-5"	4'-0"	6'-1"	5'-4"	4'-9"	4'-4"
175.0	3'-3"	2'-10"	2'-6"	2'-4"	4'-1"	3'-7"	3'-2"	2'-11"	6'-11"	6'-0"	5'-4"	4'-11"	5'-7"	4'-10"	4'-4"	4'-0"	6'-0"	5'-3"	4'-8"	4'-3"
180.0	3'-3"	2'-10"	2'-6"	2'-3"	4'-1"	3'-6"	3'-2"	2'-10"	6'-10"	5'-11"	5'-4"	4'-10"	5'-7"	4'-10"	4'-4"	3'-11"	5'-11"	5'-2"	4'-7"	4'-2"
185.0	3'-2"	2'-9"	2'-6"	2'-3"	4'-0"	3'-5"	3'-1"	2'-10"	6'-9"	5'-10"	5'-3"	4'-9"	5'-6"	4'-9"	4'-3"	3'-10"	5'-10"	5'-1"	4'-7"	4'-2"
190.0	3'-2"	2'-9"	2'-5"	2'-3"	3'-11"	3'-5"	3'-1"	2'-9"	6'-8"	5'-9"	5'-2"	4'-8"	5'-5"	4'-8"	4-2"	3'-10"	5'-10"	5'-0"	4'-6"	4'-1"
195.0	3'-1"	2'-8"	2'-5"	2'-2"	3'-11"	3'-4"	3'-0"	2'-9"	6'-7"	5'-8"	5'-1"	4'-8"	5'-4"	4'-7"	4-2"	3'-9"	5'-9"	4'-11"	4'-5"	4'-1"

PRODUCT RENEWED
as complying with the Florida Building Code
Acceptance No. 05-0623.05
Expiration Date 11/08/11
By [signature]
Miami Dade Product Control Division

F.B.C. (High Velocity Hurricane Zone)

* STORM BAR SPACING SHALL BE SUCH THAT MAXIMUM SLAT SPAN SHALL NOT BE EXCEEDED.

MAY 12 2006

© 2005 TILTECO INC.

TILTECO INC.
TILLIT TESTING & ENGINEERING COMPANY
6355 N.W. 36th. St., Ste. 305, VIRGINIA GARDENS, FL 33166
Phone : (305)871-1530 . Fax : (305)871-1531
e-mail: tilteco@aol.com
EB-0006719
WALTER A. TILLIT Jr. P. E.
FLORIDA Lic. # 44167

55 mm AL3-E SLAT ROLL-UP SHUTTER

QMI ROLL SHUTTER

1661 GLENLAKE AVENUE
ITASCA, ILLINOIS. 60143

REV. No	DESCRIPTION	DATE	REV. No	DESCRIPTION	DATE
1	OLD DWG 02-363	5/4/05	3		
2	COMPANY NAME	5/11/06	4		

DRAWN BY M.C.V. / L.G.

5/4/05 DATE

05-090 DRAWING No

SHEET 11 OF 15

STORM BAR LOADING CHART

MAXIMUM DESIGN PRESSURE RATING "W" (p. s. f.) AND CORRESPONDING MAXIMUM SPAN "L" FOR A GIVEN TYPE OF STORM BAR AND STORM BAR SPACING FOR INSTALLATION WITH 2 OR MORE STORM BARS AT FRONT AND 2 OR MORE STORM BARS AT REAR.

(USE MAXIMUM VALUES BETWEEN POSITIVE AND NEGATIVE LOAD)

MAXIMUM DESIGN LOAD "W" (p.s.f.)	TYPE 1 STORM BAR (C1) .8" x 2.610" W/INSERT (QMI-93)				TYPE 2 STORM BAR (D1) .8" x 3.123" W/INSERT (QMI-96)				TYPE 3 STORM BAR (E) 1.625" x 3.623" (QMI-97)				TYPE 4 STORM BAR (E1) 1.625" x 3.623" W/INSERT (QMI-97)				TYPE 5 STORM BAR (E2) 1.625" x 3.623" W/2 INSERTS (QMI-97)			
	STORM BAR SPACING *				STORM BAR SPACING *				STORM BAR SPACING *				STORM BAR SPACING *				STORM BAR SPACING *			
	≤ 3'-0"	3' TO 4'	4' TO 5'	5' TO 6'	≤ 3'-0"	3' TO 4'	4' TO 5'	5' TO 6'	≤ 3'-0"	3' TO 4'	4' TO 5'	5' TO 6'	< 3'-0"	3' TO 4'	4' TO 5'	5' TO 6'	< 3'-0"	3' TO 4'	4' TO 5'	5' TO 6'
40.0 OR LESS	7'-0"	6'-4"	5'-8"	5'-2"	8'-9"	7'-11"	7'-1"	6'-6"	10'-0"	9'-8"	9'-2"	8'-9"	10'-6"	10'-1"	9'-7"	8'-10"	11'-3"	10'-6"	9'-11"	9'-6"
45.0	6'-11"	6'-0"	5'-4"	4'-10"	8'-6"	7'-6"	6'-8"	6'-1"	10'-0"	9'-5"	8'-11"	8'-6"	10'-6"	9'-10"	9'-2"	8'-4"	10'-11"	10'-2"	9'-7"	9'-0"
50.0	6'-6"	5'-8"	5'-1"	4'-7"	8'-2"	7'-1"	6'-4"	5'-9"	9'-10"	9'-2"	8'-8"	8'-3"	10'-3"	9'-7"	8'-8"	7'-11"	10'-8"	9'-11"	9'-4"	8'-6"
55.0	6'-3"	5'-5"	4'-10"	4'-5"	7'-10"	6'-9"	6'-1"	5'-6"	9'-8"	9'-0"	8'-6"	8'-1"	10'-0"	9'-3"	8'-3"	7'-7"	10'-5"	9'-8"	8'-11"	8'-1"
60.0	6'-0"	5'-2"	4'-7"	4'-3"	7'-6"	6'-6"	5'-9"	5'-3"	9'-5"	8'-9"	8'-3"	7'-9"	9'-10"	8'-10"	7'-11"	7'-3"	10'-2"	9'-6"	8'-6"	7'-9"
65.0	5'-9"	5'-0"	4'-5"	4'-1"	7'-2"	6'-3"	5'-7"	5'-1"	9'-3"	8'-7"	8'-2"	7'-5"	9'-7"	8'-6"	7'-7"	6'-11"	10'-0"	9'-2"	8'-2"	7'-6"
70.0	5'-6"	4'-9"	4'-3"	3'-11"	6'-11"	6'-0"	5'-4"	4'-11"	9'-1"	8'-5"	7'-10	7'-2"	9'-5"	8'-3"	7'-4"	6'-8"	9'-9"	8'-10"	7'-11"	7'-2"
75.0	5'-4"	4'-7"	4'-2"	3'-9"	6'-8"	5'-9"	5'-2"	4'-9"	8'-11"	8'-3"	7'-7"	6'-11"	9'-2"	7'-11"	7'-1"	6'-6"	9'-7"	8'-6"	7'-7"	6'-11"
80.0	5'-2"	4'-6"	4'-0"	3'-8"	6'-6"	5'-7"	5'-0"	4'-7"	8'-9"	8'-2"	7'-4"	6'-8"	8'-10"	7'-8"	6'-10"	6'-3"	9'-6"	8'-3"	7'-4"	6'-9"
85.0	5'-0"	4'-4"	3'-11"	3'-7"	6'-3"	5'-5"	4'-10"	4'-5"	8'-8"	7'-11"	7'-1"	6'-6"	8'-7"	7'-5"	6'-8"	6'-1"	9'-3"	8'-0"	7'-2"	6'-6"
90.0	4'-10"	4'-3"	3'-9"	3'-5"	6'-1"	5'-3"	4'-9"	4'-4"	8'-6"	7'-9"	6'-11"	6'-4"	8'-4"	7'-3"	6'-6"	5'-11"	9'-0"	7'-9"	6'-11"	6'-4"
95.0	4'-9"	4'-1"	3'-8"	3'-4"	5'-11"	5'-2"	4'-7"	4'-2"	8'-5"	7'-6"	6'-9"	6'-2"	8'-2"	7'-1"	6'-4"	5'-9"	8'-9"	7'-7"	6'-9"	6'-2"
100.0	4'-7"	4'-0"	3'-7"	3'-3"	5'-9"	5'-0"	4'-6"	4'-1"	8'-3"	7'-4"	6'-7"	6'-0"	7'-11"	6'-10"	6'-2"	5'-7"	8'-6"	7'-4"	6'-7"	6'-0"
105.0	4'-6"	3'-11"	3'-6"	2'-2"	5'-8"	4'-11"	4'-5"	4'-0"	8'-2"	7'-2"	6'-5"	5'-10"	7'-9"	6'-8"	6'-0"	5'-6"	8'-4"	7'-2"	6'-5"	5'-10"
110.0	4'-5"	3'-10"	3'-5"	3'-1"	5'-6"	4'-9"	4'-3"	3'-11"	8'-1"	7'-0"	6'-3"	5'-8"	7'-7"	6'-7"	5'-10"	5'-4"	8'-1"	7'-0"	6'-3"	5'-9"
115.0	4'-4"	3'-9"	3'-4"	3'-1"	5'-5"	4'-8"	4'-2"	3'-10"	7'-11"	6'-10"	6'-1"	5'-7"	7'-5"	6'-5"	5'-9"	5'-3"	7'-11"	6'-10"	6'-2"	5'-7"
120.0	4'-3"	3'-8"	3'-3"	3'-0"	5'-3"	4'-7"	4'-1"	3'-9"	7'-9"	6'-8"	6'-0"	5'-6"	7'-3"	6'-3"	5'-7"	5'-1"	7'-9"	6'-9"	6'-0"	5'-6"
125.0	4'-2"	3'-7"	3'-2"	2'-11"	5'-2"	4'-6"	4'-0"	3'-8"	7'-7"	6'-7"	5'-10"	5'-4"	7'-1"	6'-2"	5'-6"	5'-0"	7'-7"	6'-7"	5'-11"	5'-5"
130.0	4'-1"	3'-6"	3'-2"	2'-10"	5'-1"	4'-5"	3'-11"	3'-7"	7'-5"	6'-5"	5'-9"	5'-3"	6'-11"	6'-0"	5'-5"	4'-11"	7'-6"	6'-6"	5'-9"	5'-3"
135.0	4'-0"	3'-5"	3'-1"	2'-10"	5'-0"	4'-4"	3'-10"	3'-6"	7'-3"	6'-4"	5'-8"	5'-2"	6'-10"	5'-11"	5'-3"	4'-10"	7'-4"	6'-4"	5'-8"	5'-2"
140.0	3'-11"	3'-5"	3'-0"	2'-9"	4'-11"	4'-3"	3'-9"	3'-6"	7'-2"	6'-2"	5'-6"	5'-1"	6'-8"	5'-10"	5'-2"	4'-9"	7'-2"	6'-3"	5'-7"	5'-1"
145.0	3'-10"	3'-4"	3'-0"	2'-9"	4'-10"	4'-2"	3'-9"	3'-5"	7'-0"	6'-1"	5'-5"	5'-0"	6'-7"	5'-8"	5'-1"	4'-8"	7'-1"	6'-1"	5'-6"	5'-0"
150.0	3'-9"	3'-3"	2'-11"	2'-8"	4'-9"	4'-1"	3'-8"	3'-4"	6'-11"	6'-0"	5'-4"	4'-11"	6'-6"	5'-7"	5'-0"	4'-7"	6'-11"	6'-0"	5'-5"	4'-11"
155.0	3'-9"	3'-3"	2'-10"	2'-7"	4'-8"	4'-0"	3'-7"	3'-3"	6'-10"	5'-11"	5'-3"	4'-10"	6'-4"	5'-6"	4'-11"	4'-6"	6'-10"	5'-11"	5'-4"	4'-10"
160.0	3'-8"	3'-2"	2'-10"	2'-7"	4'-7"	4'-0"	3'-7"	3'-3"	6'-8"	5'-10"	5'-2"	4'-9"	6'-3"	5'-5"	4'-10"	4'-5"	6'-9"	5'-10"	5'-3"	4'-9"
165.0	3'-7"	3'-1"	2'-9"	2'-7"	4'-6"	3'-11"	3'-6"	3'-2"	6'-7"	5'-8"	5'-1"	4'-8"	6'-2"	5'-4"	4'-9"	4'-4"	6'-8"	5'-9"	5'-2"	4'-8"
170.0	3'-7"	3'-1"	2'-9"	2'-6"	4'-5"	3'-10"	3'-5"	3'-2"	6'-6"	5'-7"	5'-0"	4'-7"	6'-1"	5'-3"	4'-9"	4'-4"	6'-6"	5'-8"	5'-1"	4'-7"
175.0	3'-6"	3'-0"	2'-8"	2'-6"	4'-5"	3'-9"	3'-5"	3'-1"	6'-5"	5'-6"	4'-11"	4'-6"	6'-0"	5'-2"	4'-8"	4'-3"	6'-5"	5'-7"	5'-0"	4'-7"
180.0	3'-5"	3'-0"	2'-8"	2'-5"	4'-4"	3'-9"	3'-4"	3'-1"	6'-4"	5'-6"	4'-11"	4'-6"	5'-11"	5'-1"	4'-7"	4'-2"	6'-4"	5'-6"	4'-11"	4'-6"
185.0	3'-5"	2'-11"	2'-8"	2'-5"	4'-3"	3'-8"	3'-4"	3'-0"	6'-3"	5'-5"	4'-10"	4'-5"	5'-10"	5'-1"	4'-6"	4'-1"	6'-3"	5'-5"	4'-10"	4'-5"
190.0	3'-4"	2'-11"	2'-7"	2'-4"	4'-2"	3'-8"	3'-3"	3'-0"	6'-2"	5'-4"	4'-9"	4'-4"	5'-9"	5'-0"	4'-5"	4'-1"	6'-2"	5'-4"	4'-9"	4'-4"
195.0	3'-4"	2'-10"	2'-7"	2'-4"	4'-2"	3'-7"	3'-3"	2'-11"	6'-1"	5'-3"	4'-8"	4'-3"	5'-8"	4'-11"	4'-5"	4'-0"	6'-1"	5'-3"	4'-9"	4'-4"

PRODUCT RENEWED
as complying with the Florida
Building Code
Acceptance No 05-0623.05
Expiration Date 11/08/11
By
Miami-Dade Product Control
Division

F.B.C. (High Velocity Hurricane Zone)

* STORM BAR SPACING SHALL BE SUCH THAT MAXIMUM SLAT SPAN SHALL NOT BE EXCEEDED.

MAY 12 2006

© 2005 TILTECO INC.

TILTECO INC.
TILLIT TESTING & ENGINEERING COMPANY
6355 N.W. 36th. St., Ste. 305, VIRGINIA GARDENS, Fl. 33166
Phone : (305)871-1530 . Fax : (305)871-1531
e-mail: tilteco@aol.com
EB-0006719
WALTER A. TILLIT Jr. P. E.
FLORIDA Lic. # 44167

55 mm AL3-E SLAT ROLL-UP SHUTTER

QMI ROLL SHUTTER

1661 GLENLAKE AVENUE
ITASCA, ILLINOIS. 60143

REV. No	DESCRIPTION	DATE	REV. No	DESCRIPTION	DATE
1	OLD DWG 02-363	5/4/05	3		
2	COMPANY NAME	5/11/06	4		

DRAWN BY M.C.V. / L.G.

5/4/05 DATE

05-090 DRAWING No

SHEET 11A OF 15

HEADER LOADING CHART
MAXIMUM DESIGN PRESSURE RATING "W" (p. s. f.) AND CORRESPONDING MAXIMUM SPAN "L" (Ft.) FOR A GIVEN TYPE OF HEADER AND STORM BAR HEIGHT (Ft.).
(USE MAXIMUM VALUES BETWEEN POSITIVE AND NEGATIVE LOAD)

MAXIMUM DESIGN LOAD "W" (p.s.f.)	TYPE 1 HEADER (F) 1.0" X 3.580" (QMI-88)			TYPE 2 HEADER (F1) 1.0" X 3.580" W/INSERT (QMI-88)			TYPE 3 HEADER (G) 1.5" X 6.0" (QMI-88)				TYPE 4 HEADER (G1) 1.5" X 6.0" W/INSERT (QMI-88)				TYPE 5 HEADER (G2) 2" x 4" X .125"			TYPE 6 HEADER (G3) 2" x 4" X .250"			
	STORM BAR HEIGHT			STORM BAR HEIGHT			STORM BAR HEIGHT				STORM BAR HEIGHT				STORM BAR HEIGHT			STORM BAR HEIGHT			
	≤ 5'-0"	5' TO 7'	7' TO 8'	≤ 5'-0"	5' TO 7'	7' TO 8'	≤ 7'-0"	7' TO 9'	9' TO 10'	10' TO 12'	≤ 7'-0"	7' TO 9'	9' TO 10'	10' TO 12'	≤ 5'-0"	5' TO 8'	8' TO 10'	≤ 6'-0"	6' TO 8'	8' TO 10'	10' TO 12'
40.0 OR LESS	11'-4"	9'-7"	9'-0"	11'-4"	9'-7"	9'-0"	17'-1"	15'-10"	15'-0"	13'-8"	17'-1"	15'-10"	15'-0"	13'-8"	12'-2"	9'-8"	8'-8"	14'-10"	12'-11"	11'-6"	10'-6"
45.0	10'-8"	9'-0"	8'-5"	10'-8"	9'-0"	8'-5"	16'-7"	14'-11"	14'-2"	12'-11"	16'-7"	14'-11"	14'-2"	12'-11"	11'-6"	9'-1"	8'-2"	14'-0"	12'-2"	10'-10"	9'-11"
50.0	10'-2"	8'-7"	8'-0"	10'-2"	8'-7"	8'-0"	16'-1"	14'-2"	13'-5"	12'-3"	16'-1"	14'-2"	13'-5"	12'-3"	10'-11"	8'-8"	7'-9"	13'-4"	11'-6"	10'-4"	9'-5"
55.0	9'-8"	8'-2"	7'-8"	9'-8"	8'-2"	7'-8"	15'-4"	13'-6"	12'-10"	11'-8"	15'-4"	13'-6"	12'-10"	11'-8"	10'-5"	8'-3"	7'-4"	12'-8"	11'-0"	9'-10"	9'-0"
60.0	9'-3"	7'-10"	7'-4"	9'-3"	7'-10"	7'-4"	14'-8"	12'-11"	12'-3"	11'-2"	14'-8"	12'-11"	12'-3"	11'-2"	10'-0"	7'-10"	7'-1"	12'-2"	10'-6"	9'-5"	9'-7"
65.0	8'-11"	7'-6"	7'-0"	8'-11"	7'-6"	7'-0"	14'-1"	12'-5"	11'-9"	10'-9"	14'-1"	12'-5"	11'-9"	10'-9"	9'-7"	7'-7"	6'-9"	11'-8"	10'-1"	9'-0"	8'-3"
70.0	8'-7"	7'-3"	6'-9"	8'-7"	7'-3"	6'-9"	13'-7"	12'-0"	11'-4"	10'-4"	13'-7"	12'-0"	11'-4"	10'-4"	9'-3"	7'-3"	6'-6"	11'-3"	9'-9"	8'-8"	7'-11"
75.0	8'-3"	7'-0"	6'-7"	8'-3"	7'-0"	6'-7"	13'-1"	11'-7"	11'-0"	10'-0"	13'-1"	11'-7"	11'-0"	10'-0"	8'-11"	7'-1"	6'-4"	10'-10"	9'-5"	8'-5"	7'-8"
80.0	8'-0"	6'-9"	6'-4"	8'-0"	6'-9"	6'-4"	12'-8"	11'-2"	10'-7"	9'-8"	12'-8"	11'-2"	10'-7"	9'-8"	8'-8"	6'-10"	6'-1"	10'-6"	9'-1"	8'-2"	7'-5"
85.0	7'-9"	6'-7"	6'-2"	7'-9"	6'-7"	6'-2"	12'-4"	10'-10"	10'-4"	9'-5"	12'-4"	10'-10"	10'-4"	9'-5"	8'-4"	6'-7"	5'-11"	10'-2"	8'-10"	7'-11"	7'-3"
90.0	7'-7"	6'-5"	6'-0"	7'-7"	6'-5"	6'-0"	12'-0"	10'-7"	10'-0"	9'-2"	12'-0"	10'-7"	10'-0"	9'-2"	8'-2"	6'-5"	5'-9"	9'-11"	8'-7"	7'-8"	7'-0"
95.0	7'-4"	6'-3"	5'-10"	7'-4"	6'-3"	5'-10"	11'-8"	10'-3"	9'-9"	8-'11"	11'-8"	10'-3"	9'-9"	8-'11"	7'-11"	6'-3"	5'-7"	9'-8"	8'-4"	7'-6"	6'-10"
100.0	7'-2"	6'-1"	5'-8"	7'-2"	6'-1"	5'-8"	11'-4"	10'-0"	9'-6"	8'-8"	11'-4"	10'-0"	9'-6"	8'-8"	7'-9"	6'-1"	5'-5"	9'-5"	8'-2"	7'-3"	6'-8"
105.0	7'-0"	5'-11"	5'-6"	7'-0"	5'-11"	5'-6"	11'-1"	9'-9"	9'-3"	8'-6"	11'-1"	9'-9"	9'-3"	8'-6"	7'-6"	5'-11"	5'-4"	9'-2"	7'-11"	7'-1"	6'-6"
110.0	6'-10"	5'-9"	5'-5"	6'-10"	5'-9"	5'-5"	10'-10"	9'-7"	9'-1"	8'-3"	10'-10"	9'-7"	9'-1"	8'-3"	7'-4"	5'-10"	5'-2"	9'-0"	7'-9"	6'-11"	6'-4"
115.0	6'-8"	5'-8"	5'-3"	6'-8"	5'-8"	5'-3"	10'-7"	9'-4"	8'-10"	8'-1"	10'-7"	9'-4"	8'-10"	8'-1"	7'-2"	5'-8"	5'-1"	8'-9"	7'-7"	6'-10"	6'-2"
120.0	6'-7"	5'-6"	5'-2"	6'-7"	5'-6"	5'-2"	10'-4"	9'-2"	8'-8"	7'-11"	10'-4"	9'-2"	8'-8"	7'-11"	7'-1"	5'-7"	5'-0"	8'-7"	7'-5"	6'-8"	6'-1"
125.0	6'-5"	5'-5"	5'-1"	6'-5"	5'-5"	5'-1"	10'-2"	8'-11"	8'-6"	7'-9"	10'-2"	8'-11"	8'-6"	7'-9"	6'-11"	5'-5"	4'-11"	8'-5"	7'-3"	6'-6"	5'-11"
130.0	6'-3"	5'-4"	5'-0"	6'-3"	5'-4"	5'-0"	9'-11"	8'-9"	8'-4"	7'-7"	9'-11"	8'-9"	8'-4"	7'-7"	6'-9"	5'-4	4'-9"	8'-3"	7'-2"	6'-5"	5'-10"
135.0	6'-2"	5'-3"	4'-11"	6'-2"	5'-3"	4'-11"	9'-9"	8'-7"	8'-2"	7'-6"	9'-9"	8'-7"	8'-2"	7'-6"	6'-8"	5'-3"	4'-8"	8'-1"	7'-0"	6'-3"	5'-9"
140.0	6'-1"	5'-1"	4'-9"	6'-1"	5'-1"	4'-9"	9'-7"	8'-6"	8'-0"	7'-4"	9'-7"	8'-6"	8'-0"	7'-4"	6'-6"	5'-2"	4'-7"	7'-11"	6'-11"	6'-2"	5'-7"
145.0	5'-11"	5'-0"	4'-8"	5'-11"	5'-0"	4'-8"	9'-5"	8'-4"	7'-11"	7'-2"	9'-5"	8'-4"	7'-11"	7'-2"	6'-5"	5'-1"	4'-6"	7'-10"	6'-9"	6'-1"	5'-6"
150.0	5'-10"	4'-11"	4'-8"	5'-10"	4'-11"	4'-8"	9'-3"	8'-2"	7'-9"	7'-1"	9'-3"	8'-2"	7'-9"	7'-1"	6'-4"	5'-0"	4'-5"	7'-8"	6'-8"	5'-11"	5'-5"
155.0	5'-9"	4'-10"	4'-7"	5'-9"	4'-10"	4'-7"	9'-1"	8'-0"	7'-8"	7'-0"	9'-1"	8'-0"	7'-8"	7'-0"	6'-2"	4'-11"	4'-5"	7'-7"	6'-7"	5'-10"	5'-4"
160.0	5'-8"	4'-9"	4'-6"	5'-8"	4'-9"	4'-6"	9'-0"	7'-11"	7'-6"	6'-10"	9'-0"	7'-11"	7'-6"	6'-10"	6'-1"	4'-10"	4'-4"	7'-5"	6'-5"	5'-9"	5'-3"
165.0	5'-7"	4'-9"	4'-5"	5'-7"	4'-9"	4'-5"	8'-10"	7'-10"	7'-5"	6'-9"	8'-10"	7'-10"	7'-5"	6'-9"	6'-0"	4'-9"	4'-3"	7'-4"	6'-4"	5'-8"	5'-2"
170.0	5'-6"	4'-8"	4'-4"	5'-6"	4'-8"	4'-4"	8'-8"	7'-8"	7'-3"	6'-8"	8'-8"	7'-8"	7'-3"	6'-8"	5'-11"	4'-8"	4'-2"	7'-3"	6'-3"	5'-7"	5'-1"
175.0	5'-5"	4'-7"	4'-3"	5'-5"	4'-7"	4'-3"	8'-7"	7'-7"	7'-2"	6'-7"	8'-7"	7'-7"	7'-2"	6'-7"	5'-10"	4'-7"	4'-1"	7'-1"	6'-2"	5'-6"	5'-0"
180.0	5'-4"	4'-6"	4'-3"	5'-4"	4'-6"	4'-3"	8'-6"	7'-6"	7'-1"	6'-6"	8'-6"	7'-6"	7'-1"	6'-6"	5'-9"	4'-7"	4'-1"	7'-0"	6'-1"	5'-5"	4'-11"
185.0	5'-3"	4'-5"	4'-2"	5'-3"	4'-5"	4'-2"	8'-4"	7'-4"	7'-0"	6'-4"	8'-4"	7'-4"	7'-0"	6'-4"	5'-8"	4'-6"	4'-0"	6'-11"	6'-0"	5'-4"	4'-11"
190.0	5'-2"	4'-5"	4'-1"	5'-2"	4'-5"	4'-1"	8'-3"	7'-3"	6'-11"	6'-3"	8'-3"	7'-3"	6'-11"	6'-3"	5'-7"	4'-5"	3'-11"	6'-10"	5'-11"	5'-3"	4'-10"
195.0	5'-2"	4'-4"	4'-1"	5'-2"	4'-4"	4'-1"	8'-2"	7'-2"	6'-10"	6'-2"	8'-2"	7'-2"	6'-10"	6'-2"	5'-6"	4'-4"	3'-11"	6'-9"	5'-10"	5'-3"	4'-9"

F.B.C. (High Velocity Hurricane Zone)

PRODUCT RENEWED
as complying with the Florida Building Code
Acceptance No 05-0623.05
Expiration Date 11/08/11
By
Miami-Dade Product Control Division

MAY 13 2006

© 2005 TILTECO INC.

TILTECO INC.
TILLIT TESTING & ENGINEERING COMPANY
6355 N.W. 36th. St., Ste. 305, VIRGINIA GARDENS, Fl. 33166
Phone : (305)871-1530 . Fax : (305)871-1531
e-mail: tilteco@aol.com
EB-0006719
WALTER A. TILLIT Jr. P. E.
FLORIDA Lic. # 44167

55 mm AL3-E SLAT ROLL-UP SHUTTER

QMI ROLL SHUTTER

1661 GLENLAKE AVENUE
ITASCA, ILLINOIS. 60143

REV. No	DESCRIPTION	DATE	REV. No	DESCRIPTION	DATE
1	OLD DWG 02-363	5/4/05	3		
2	COMPANY NAME	5/11/06	4		

DRAWN BY M.C.V. / L.G.

5/4/05 DATE

05-090 DRAWING No

MULLION LOADING CHART
MAXIMUM DESIGN PRESSURE RATING "W" (p. s. f.) AND CORRESPONDING MAXIMUM SPAN "L" (Ft.) FOR A GIVEN TYPE OF MULLION AND MULLION SPACING (Ft.).

(USE MAXIMUM VALUES BETWEEN POSITIVE AND NEGATIVE LOAD)

MAXIMUM DESIGN LOAD "W" (p.s.f.)	TYPE 1 MULLION (H) 3" x 3" (QMI-90)				TYPE 2 MULLION (H1) 3" x 3" W/INSERT (QMI-90)				TYPE 3 MULLION (H2) 3" x 3" W/(2) INSERTS (QMI-90)				TYPE 4 MULLION (H3) 3" x 3" W/(3) INSERTS (QMI-90)			
	MULLION SPACING				MULLION SPACING				MULLION SPACING				MULLION SPACING			
	≤ 3'-0"	3' TO 4'	4' TO 5'	5' TO 6'	≤ 3'-0"	3' TO 4'	4' TO 5'	5' TO 6'	≤ 3'-0"	3' TO 4'	4' TO 6'	6' TO 8'	≤ 3'-0"	3' TO 4'	4' TO 6'	6' TO 8'
40.0 OR LESS	9'-7"	8'-8"	8'-1"	8'-8"	9'-10"	8'-11"	8'-4"	9'-0"	10'-2"	9'-3"	9'-3"	8'-5"	10'-5"	9'-5"	9'-6"	8'-7"
45.0	9'-2"	8'-4"	7'-9"	8'-4"	9'-6"	8'-7"	8'-0"	8'-8"	9'-9"	8'-10"	8'-11"	8'-1"	10'-0"	9'-1"	9'-1"	8'-3"
50.0	8'-10"	8'-1"	7'-6"	8'-1"	9'-2"	8'-4"	7'-9"	8'-4"	9'-5"	8'-7"	8'-7"	7'-10"	9'-8"	8'-9"	8'-10"	8'-0"
55.0	8'-7"	7'-10"	7'-3"	7'-10"	8'-10"	8'-1"	7'-6"	8'-1"	9'-1"	8'-3"	8'-4"	7'-7"	9'-4"	8'-6"	8'-6"	7'-9"
60.0	8'-4"	7'-7"	7'-0"	7'-7"	8'-7"	7'-10"	7'-3"	7'-10"	8'-10"	8'-1"	8'-1"	7'-4"	9'-1"	8'-3"	8'-3"	7'-6"
65.0	8'-2"	7'-5"	6'-10"	7'-5"	8'-5"	7'-7"	7'-1"	7'-8"	8'-7"	7'-10"	7'-10"	7'-2"	8'-10"	8'-1"	8'-1"	7'-4"
70.0	7'-11"	7'-2"	6'-8"	7'-3"	8'-2"	7'-5"	6'-11"	7'-5"	8'-5"	7'-8"	7'-8"	7'-0"	8'-8"	7'-10"	7'-10"	7'-2"
75.0	7'-9"	7'-0"	6'-6"	7'-1"	8'-0"	7'-3"	6'-9"	7'-3"	8'-3"	7'-6"	7'-6"	6'-10"	8'-5"	7'-8"	7'-8"	7-0"
80.0	7'-7"	6'-11"	6'-5"	6'-11"	7'-10"	7'-1"	6'-7"	7'-2"	8'-1"	7'-4"	7'-4"	6'-8"	8'-3"	7'-6"	7'-6"	6'-10"
85.0	7'-5"	6'-9"	6'-3"	6'-9"	7'-8"	7'-0"	6'-6"	7'-0"	7'-11"	7'-2"	7'-2"	6'-6"	8'-1"	7'-4"	7'-5"	6'-8"
90.0	7'-4"	6'-8"	6'-2"	6'-8"	7'-6"	6'-10"	6'-4"	6'-10"	7'-9"	7'-0"	7'-1"	6'-5"	7'-11"	7'-3"	7'-3"	6'-7"
95.0	7'-2"	6'-6"	6'-0"	6'-6"	7'-5"	6'-9"	6'-3"	6'-9"	7'-7"	6'-11"	6'-11"	6'-3"	7'-10"	7'-1"	7'-1"	6'-5"
100.0	7'-0"	6'-5"	5'-11"	6'-5"	7'-3"	6'-7"	6'-1"	6'-7"	7'-6"	6'-9"	6'-10"	6'-2"	7'-8"	7'-0"	7'-0"	6'-4"
105.0	6'-11"	6'-4"	5'-10"	6'-4"	7'-2"	6'-6"	6'-0"	6'-6"	7'-4"	6'-8"	6'-8"	6'-1"	7'-7"	6'-10"	6'-10"	6'-3"
110.0	6'-10"	6'-2"	5'-9"	6'-3"	7'-0"	6'-5"	5'-11"	6'-5"	7'-3"	6'-7"	6'-7"	6'-0"	7'-5"	6'-9"	6'-9"	6'-2"
115.0	6'-9"	6'-1"	5'-8"	6'-1"	6'-11"	6'-4"	5'-10"	6'-4"	7'-2"	6'-6"	6'-6"	5'-11"	7'-4"	6'-8"	6'-8"	6'-1"
120.0	6'-8"	6'-0"	5'-7"	6'-0"	6'-10"	6'-3"	5'-9"	6'-3"	7'-0"	6'-5"	6'-5"	5'-10"	7'-3"	6'-7"	6'-7"	6'-0"
125.0	6'-6"	5'-11"	5'-6"	5'-11"	6'-9"	6'-1"	5'-8"	6'-2"	6'-11"	6'-4"	6'-4"	5'-9"	7'-1"	6'-6"	6'-6"	5'-11"
130.0	6'-5"	5'-10"	5'-5"	5'-11"	6'-8"	6'-1"	5'-7"	6'-1"	6'-10"	6'-3"	6'-3"	5'-8"	7'-0"	6'-5"	6'-5"	5'-10"
135.0	6'-4"	5'-9"	5'-4"	5'-10"	6'-7"	6'-0"	5'-7"	6'-0"	6'-9"	6'-2"	6'-2"	5'-7"	6'-11"	6'-4"	6'-4"	5'-9"
140.0	6'-4"	5'-9"	5'-4"	5'-9"	6'-6"	5'-11"	5'-6"	5'-11"	6'-8"	6'-1"	6'-1"	5'-6"	6'-10"	6'-3"	6'-3"	5'-8"
145.0	6'-3"	5'-8"	5'-3"	5'-8"	6'-5"	5'-10"	5'-5"	5'-10"	6'-7"	6'-0"	6'-0"	5'-6"	6'-9"	6'-2"	6'-2"	5'-7"
150.0	6'-2"	5'-7"	5'-2"	5'-7"	6'-4"	5'-9"	5'-4"	5'-9"	6'-6"	5'-11"	5'-11"	5'-5"	6'-8"	6'-1"	6'-1"	5'-7"
155.0	6'-1"	5'-6"	5'-2"	5'-7"	6'-3"	5'-8"	5'-4"	5'-9"	6'-5"	5'-10"	5'-11"	5'-4"	6'-8"	6'-0"	6'-0"	5'-6"
160.0	6'-0"	5'-6"	5'-1"	5'-6"	6'-3"	5'-8"	5'-3"	5'-8"	6'-5"	5'-10"	5'-10"	5'-3"	6'-7"	5'-11"	6'-0"	5'-5"
165.0	5'-11"	5'-5"	5'-0"	5'-5"	6'-2"	5'-7"	5'-2"	5'-7"	6'-4"	5'-9"	5'-9"	5'-3"	6'-6"	5'-11"	5'-11"	5'-4"
170.0	5'-11"	5'-4"	5'-0"	5'-4"	6'-1"	5'-6"	5'-2"	5'-7"	6'-3"	5'-8"	5'-8"	5'-2"	6'-5"	5'-10"	5'-10"	5'-4"
175.0	5'-10"	5'-4"	4'-11"	5'-4"	6'-0"	5'-6"	5'-1"	5'-6"	6'-2"	5'-8"	5'-8"	5'-2"	6'-4"	5'-9"	5'-10"	5'-3"
180.0	5'-9"	5'-3"	4'-11"	5'-3"	6'-0"	5'-5"	5'-0"	5'-5"	6'-2"	5'-7"	5'-7"	5'-1"	6'-4"	5'-9"	5'-9"	5'-3"
185.0	5'-9"	5'-3"	4'-10"	5'-3"	5'-11"	5'-4"	5'-0"	5'-5"	6'-1"	5'-6"	5'-7"	5'-0"	6'-3"	5'-8"	5'-8"	5'-2"
190.0	5'-8"	5'-2"	4'-10"	5'-2"	5'-10"	5'-4"	4'-11"	5'-4"	6'-0"	5'-6"	5'-6"	5'-0"	6'-2"	5'-8"	5'-8"	5'-2"
195.0	5'-8"	5'-1"	4'-9"	5'-2"	5'-10"	5'-3"	4'-11"	5'-4"	6'-0"	5'-5"	5'-5"	4'-11"	6'-2"	5'-7"	5'-7"	5'-1"

PRODUCT RENEWED
as complying with the Florida Building Code
Acceptance No 05-0623.05
Expiration Date 11/08/11
By
Miami Dade Product Control Division

NOTES : REFER TO ELEVATIONS ON SHEET 1A OF 15

1-. FOR MULLIONS INSTALLED W/O STORM BARS

A) MULLION SPACING SHALL BE SUCH THAT MAXIMUM SLAT SPAN SHALL NOT BE EXCEEDED

2-. FOR MULLIONS INSTALLED W/ STORM BARS & HEADERS

A) MULLION SPACING SHALL BE SUCH THAT MAXIMUM HEADER SPAN SHALL NOT BE EXCEEDED

B) STORM BAR SPACING SHALL BE SUCH THAT MAXIMUM SLAT SPAN SHALL NOT BE EXCEEDED

MAY 12 2005

F.B.C. (High Velocity Hurricane Zone)

© 2005 TILTECO INC.

TILTECO INC.
TILLIT TESTING & ENGINEERING COMPANY
6355 N.W. 36th. St., Ste. 305, VIRGINIA GARDENS, Fl. 33166
Phone : (305)871-1530 . Fax : (305)871-1531
e-mail: tilteco@aol.com
EB-0006719
WALTER A. TILLIT Jr. P. E.
FLORIDA Lic. # 44167

55 mm AL3-E SLAT ROLL-UP SHUTTER

QMI ROLL SHUTTER

1661 GLENLAKE AVENUE
ITASCA, ILLINOIS. 60143

REV. No	DESCRIPTION	DATE	REV. No	DESCRIPTION	DATE
1	OLD DWG 02-363	5/4/05	3		
2	COMPANY NAME	5/11/06	4		

DRAWN BY M.C.V. / L.G.

5/4/05 DATE

05-090 DRAWING No

SHEET 13 OF 15

MULLION LOADING CHART

MAXIMUM DESIGN PRESSURE RATING "W" (p. s. f.) AND CORRESPONDING MAXIMUM SPAN "L" (Ft.) FOR A GIVEN TYPE OF MULLION AND MULLION SPACING (Ft.).

(USE MAXIMUM VALUES BETWEEN POSTIVE AND NEGATIVE LOAD)

MAXIMUM DESIGN LOAD "W" (p.s.f.)	TYPE 5 MULLION (1) 3" x 4" (QMI-91)			TYPE 6 MULLION (11) 3" x 4" W/INSERT (QMI-91)			TYPE 7 MULLION (12) 3" x 4" W/(2) INSERTS (QMI-91)			TYPE 8 MULLION (13) 3" x 4" W/(3) INSERTS (QMI-91)				
	MULLION SPACING			MULLION SPACING			MULLION SPACING			MULLION SPACING				
	≤ 4'-0"	4' TO 5'	5' TO 6'	≤ 4'-0"	4' TO 5'	5' TO 6'	≤ 4'-0"	4' TO 5'	5' TO 8'	≤ 4'-0"	4' TO 5'	5' TO 8'	8' TO 10'	10' TO 12'
40.0	11'-9"	10'-10"	11'-9"	12'-1"	11'-2"	12'-1"	12'-5"	11'-6"	11'-4"	12'-9"	11'-10"	11'-7"	10'-9"	10'-2"
45.0	11'-3"	10'-5"	11'-3"	11'-7"	10'-9"	11'-8"	11'-11"	11'-1"	10'-10"	12'-3"	11'-4"	11'-2"	10'-4"	9'-9"
50.0	10'-10"	10'-1"	10'-11"	11'-2"	10'-5"	11'-3"	11'-6"	10'-8"	10'-6"	11'-10"	11'-0"	10'-9"	10'-0"	9'-5"
55.0	10'-6"	9'-9"	10'-7"	10'-10"	10'-1"	10'-11"	11'-2"	10'-4"	10'-2"	11'-5"	10'-7"	10'-5"	9'-8"	9'-1"
60.0	10'-3"	9'-6"	10'-3"	10'-6"	9'-9"	10'-7"	10'-10"	10'-1"	9'-10"	11'-1"	10'-4"	10'-2"	9'-5"	8'-10"
65.0	10'-0"	9'-3"	10'-0"	10'-3"	9'-6"	10'-4"	10'-7"	9'-10"	9'-7"	10'-10"	10'-1"	9'-10"	9'-2"	8'-7"
70.0	9'-9"	9'-0"	9'-9"	10'-0"	9'-4"	10'-0"	10'-3"	9'-7"	9'-5"	10'-7"	9'-10"	9'-7"	8'-11"	8'-5"
75.0	9'-6"	8'-10"	9'-6"	9'-9"	9'-1"	9'-10"	10'-1"	9'-4"	9'-2"	10'-4"	9'-7"	9'-5"	8'-9"	8'-3"
80.0	9'-4"	8'-8"	9'-4"	9'-7"	8'-11"	9'-7"	9'-10"	9'-2"	9'-0"	10'-1"	9'-4"	9'-2"	8'-6"	8'-0"
85.0	9'-1"	8'-5"	9'-2"	9'-5"	8'-9"	9'-5"	9'-8"	8'-11"	8'-9"	9'-11"	9'-2"	9'-0"	8'-4"	7'-11"
90.0	8'-11"	8'-4"	9'-0"	9'-2"	8'-7"	9'-3"	9'-6"	8'-9"	8'-7"	9'-8"	9'-0"	8'-10"	8'-3"	7'-9"
95.0	8'-9"	8'-2"	8'-10"	9'-1"	8'-5"	9'-1"	9'-4"	8'-8"	8'-6"	9'-6"	8'-10"	8'-8"	8'-1"	7'-7"
100.0	8'-8"	8'-0"	8'-8"	8'-11"	8'-3"	8'-11"	9'-2"	8'-6"	8'-4"	9'-4"	8'-8"	8'-6"	7'-11"	7'-6"
105.0	8'-6"	7'-11"	8'-6"	8'-9"	8'-1"	8'-9"	9'-0"	8'-4"	8'-2"	9'-3"	8'-7"	8'-5"	7'-10"	7'-4"
110.0	8'-4"	7'-9"	8'-5"	8'-7"	8'-0"	8'-8"	8'-10"	8'-3"	8'-1"	9'-1"	8'-5"	8'-3"	7'-8"	7'-3"
115.0	8'-3"	7'-8"	8'-3"	8'-6"	7'-11"	8'-6"	8'-9"	8'-1"	7'-11"	8'-11"	8'-4"	8'-2"	7'-7"	7'-1"
120.0	8'-1"	7'-6"	8'-2"	8'-4"	7'-9"	8'-5"	8'-7"	8'-0"	7'-10"	8'-10"	8'-2"	8'-0"	7'-6"	7'-0"
125.0	8'-0"	7'-5"	8'-0"	8'-3"	7'-8"	8'-3"	8'-6"	7'-10"	7'-9"	8'-8"	8'-1"	7'-11"	7'-4"	6'-11"
130.0	7'-11"	7'-4"	7'-11"	8'-2"	7'-7"	8'-2"	8'-4"	7'-9"	7'-8"	8'-7"	8'-0"	7'-10"	7'-3"	6'-10"
135.0	7'-10"	7'-3"	7'-10"	8'-1"	7'-6"	8'-1"	8'-3"	7'-8"	7'-6"	8'-6"	7'-10"	7'-9"	7'-2"	6'-9"
140.0	7'-9"	7'-2"	7'-9"	7'-11"	7'-5"	8'-0"	8'-2"	7'-7"	7'-5"	8'-5"	7'-9"	7'-8"	7'-1"	6'-8"
145.0	7'-7"	7'-1"	7'-8"	7'-10"	7'-3"	7'-11"	8'-1"	7'-6"	7'-4"	8'-3"	7'-8"	7'-7"	7'-0"	6'-7"
150.0	7'-6"	7'-0"	7'-7"	7'-9"	7'-3"	7'-9"	8'-0"	7'-5"	7'-3"	8'-2"	7'-7"	7'-6"	6'-11"	6'-6"
155.0	7'-5"	6'-11"	7'-6"	7'-8"	7'-2"	7'-8"	7'-11"	7'-4"	7'-2"	8'-1"	7'-6"	7'-5"	6'-10"	6'-5"
160.0	7'-5"	6'-10"	7'-5"	7'-7"	7'-1"	7'-7"	7'-10"	7'-3"	7'-1"	8'-0"	7'-5"	7'-4"	6'-9"	6'-4"
165.0	7'-4"	6'-9"	7'-4"	7'-6"	7'-0"	7'-7"	7'-9"	7'-2"	7'-1"	7'-11"	7'-4"	7'-3"	6'-9"	6'-3"
170.0	7'-3"	6'-9"	7'-3"	7'-5"	6'-11"	7'-6"	7'-8"	7'-1"	7'-0"	7'-10"	7'-3"	7'-2"	6'-8"	6'-2"
175.0	7'-2"	6'-8"	7'-2"	7'-5"	6'-10"	7'-5"	7'-7"	7'-0"	6'-11"	7'-9"	7'-3"	7'-1"	6'-7"	6'-1"
180.0	7'-1"	6'-7"	7'-1"	7'-4"	6'-9"	7'-4"	7'-6"	7'-0"	6'-10"	7'-8"	7'-2"	7'-0"	6'-6"	6'-0"
185.0	7'-0"	6'-6"	7'-1"	7'-3"	6'-9"	7'-3"	7'-5"	6'-11"	6'-9"	7'-8"	7'-1"	6'-11"	6'-5"	5'-11"
190.0	7'-0"	6'-6"	7'-0"	7'-2"	6'-8"	7'-2"	7'-5"	6'-10"	6'-9"	7'-7"	7'-0"	6'-11"	6'-5"	5'-10"
195.0	6'-11"	6'-5"	6'-11"	7'-1"	6'-7"	7'-2"	7'-4"	6'-9"	6'-8"	7'-6"	7'-0"	6'-10"	6'-4"	5'-9"

PRODUCT RENEWED
as complying with the Florida Building Code
Acceptance No 05-0623.05
Expiration Date 11/08/11
By
Miami Dade Product Control Division

NOTES : REFER TO ELEVATIONS ON SHEET 1A OF 15

1-. FOR MULLIONS INSTALLED W/O STORM BARS

A) MULLION SPACING SHALL BE SUCH THAT MAXIMUM SLAT SPAN SHALL NOT BE EXCEEDED

2-. FOR MULLIONS INSTALLED W/ STORM BARS & HEADERS

A) MULLION SPACING SHALL BE SUCH THAT MAXIMUM HEADER SPAN SHALL NOT BE EXCEEDED

B) STORM BAR SPACING SHALL BE SUCH THAT MAXIMUM SLAT SPAN SHALL NOT BE EXCEEDED

MAY 12 2006

F.B.C. (High Velocity Hurricane Zone)

© 2005 TILTECO INC.

TILTECO INC.
TILLIT TESTING & ENGINEERING COMPANY
6355 N.W. 36th. St., Ste. 305, VIRGINIA GARDENS, Fl. 33166
Phone : (305)871-1530 . Fax : (305)871-1531
e-mail: tilteco@aol.com
EB-0006719
WALTER A. TILLIT Jr. P. E.
FLORIDA Lic. # 44167

55 mm AL3-E SLAT ROLL-UP SHUTTER

QMI ROLL SHUTTER

1661 GLENLAKE AVENUE
ITASCA, ILLINOIS. 60143

REV. No	DESCRIPTION	DATE	REV. No	DESCRIPTION	DATE
1	OLD DWG 02-363	5/4/05	3		
2	COMPANY NAME	5/11/06	4		

DRAWN BY M.C.V. / L.G.

5/4/05 DATE

05-090 DRAWING No

MULLION LOADING CHART
MAXIMUM DESIGN PRESSURE RATING "W" (p. s. f.) AND CORRESPONDING MAXIMUM SPAN "L" (Ft.) FOR A GIVEN TYPE OF MULLION AND MULLION SPACING (Ft.).

(USE MAXIMUM VALUES BETWEEN POSITIVE AND NEGATIVE LOAD)

MAXIMUM DESIGN LOAD "W" (p.s.f.)	TYPE 9 MULLION (J) 3" x 6" (QMI-92)					TYPE 10 MULLION (J1) 3" x 6" W/INSERT (QMI-92)					TYPE 11 MULLION (J2) 3" x 6" W/(2) INSERTS (QMI-92)					TYPE 12 MULLION (J3) 3" x 6" W/(3) INSERTS (QMI-92)				
	MULLION SPACING					MULLION SPACING					MULLION SPACING					MULLION SPACING				
	< 4'-0"	4' TO 5'	5' TO 8'	8' TO 10'	10' TO 12'	< 4'-0"	4' TO 5'	5' TO 8'	8' TO 10'	10' TO 12'	< 4'-0"	4' TO 5'	5' TO 8'	8' TO 10'	10' TO 12'	< 4'-0"	4' TO 5'	5' TO 8'	8' TO 10'	10' TO 12'
40.0	16'-1"	14'-11"	14'-8"	13'-7"	12'-10"	17'-0"	15'-9"	15'-5"	14'-4"	13'-6"	17'-9"	16'-6"	16'-2"	15'-0"	14'-1"	18'-5"	17'-1"	16'-10"	15'-7"	14'-8"
45.0	15'-6"	14'-5"	14'-1"	13'-1"	12'-4"	16'-4"	15'-2"	14'-10"	13'-10"	13'-0"	17'-1"	15'-10"	15'-6"	14'-5"	13'-7"	17'-9"	16'-6"	16'-2"	15'-0"	14'-1"
50.0	14'-11"	13'-11"	13'-7"	12'-8"	11'-11"	15'-9"	14'-7"	14'-4"	13'-4"	12'-6"	16'-6"	15'-3"	15'-0"	13'-11"	13'-1"	17'-1"	15'-11"	15'-7"	14'-6"	13'-8"
55.0	14'-6"	13'-5"	13'-2"	12'-3"	11'-6"	15'-3"	14'-2"	13'-11"	12'-11"	12'-2"	15'-11"	14'-10"	14'-6"	13'-6"	12'-8"	16'-7"	15'-5"	15'-1"	14'-0"	13'-2"
60.0	14'-1"	13'-1"	12'-10"	11'-11"	11'-2"	14'-10"	13'-9"	13'-6"	12'-6"	11'-10"	15'-6"	14'-5"	14'-1"	13'-1"	12'-4"	16'-1"	15'-0"	14'-8"	13'-8"	12'-10"
65.0	13'-8"	12'-9"	12'-6"	11'-7"	10'-11"	14'-5"	13'-5"	13'-2"	12'-2"	11'-6"	15'-1"	14'-0"	13'-9"	12'-9"	12'-0"	15'-8"	14'-7"	14'-4"	13'-3"	12'-6"
70.0	13'-4"	12'-5"	12'-2"	11'-4"	10'-8"	14'-1"	13'-1"	12'-10"	11'-11"	11'-2"	14'-9"	13'-8"	13'-5"	12'-5"	11'-9"	15'-4"	14'-3"	13'-11"	12'-11"	12'-2"
75.0	13'-1"	12'-2"	11'-11"	11'-1"	10'-5"	13'-9"	12'-9"	12'-6"	11'-8"	10'-11"	14'-5"	13'-4"	13'-1"	12'-2"	11'-5"	15'-0"	13'-11"	13'-8"	12'-8"	11'-11"
80.0	12'-9"	11'-10"	11'-8"	10'-10"	10'-2"	13'-6"	12'-6"	12'-3"	11'-5"	10'-8"	14'-1"	13'-1"	12'-10"	11'-11"	11'-2"	14'-8"	13'-7"	13'-4"	12'-5"	11'-8"
85.0	12'-6"	11'-8"	11'-5"	10'-7"	10'-0"	13'-2"	12'-3"	12'-0"	11'-2"	10'-5"	13'-10"	12'-10"	12'-7"	11'-8"	11'-0"	14'-4"	13'-4"	13'-1"	12'-2"	11'-5"
90.0	12'-4"	11'-5"	11'-2"	10'-5"	9'-9"	12'-11"	12'-0"	11'-10"	10'-11"	10'-1"	13'-6"	12'-7"	12'-4"	11'-5"	10'-9"	14'-1"	13'-1"	12'-10"	11'-11"	11'-2"
95.0	12'-1"	11'-2"	11'-0"	10'-3"	9'-7"	12'-9"	11'-10"	11'-7"	10'-9"	9'-10"	13'-4"	12'-4"	12'-1"	11'-3"	10'-6"	13'-10"	12'-10"	12'-7"	11'-8"	11'-0"
100.0	11'-10"	11'-0"	10'-10"	10'-0"	9'-5"	12'-6"	11'-7"	11'-5"	10'-6"	9'-7"	13'-1"	12'-2"	11'-11"	11'-1"	10'-3"	13'-7"	12'-7"	12'-5"	11'-6"	10'-10"
105.0	11'-8"	10'-10"	10'-8"	9'-11"	9'-4"	12'-4"	11'-5"	11'-2"	10'-3"	9'-4"	12'-10"	11'-11"	11'-9"	10'-10"	10'-0"	13'-4"	12'-5"	12'-2"	11'-4"	10'-7"
110.0	11'-6"	10'-8"	10'-6"	9'-9"	9'-2"	12'-1"	11'-3"	11'-0"	10'-0"	9'-2"	12'-8"	11'-9"	11'-6"	10'-8"	9'-9"	13'-2"	12'-3"	12'-0"	11'-2"	10'-4"
115.0	11'-4"	10'-6"	10'-4"	9'-7"	9'-0"	11'-11"	11'-1"	10'-10"	9'-9"	8'-11"	12'-6"	11'-7"	11'-4"	10'-5"	9'-7"	13'-0"	12'-1"	11'-10"	11'-0"	10'-1"
120.0	11'-2"	10'-4"	10'-2"	9'-5"	8'-11"	11'-9"	10'-11"	10'-8"	9'-7"	8'-9"	12'-4"	11'-5"	11'-2"	10'-3"	9'-4"	12'-9"	11'-10"	11'-8"	10'-10"	9'-11"
125.0	11'-0"	10'-3"	10'-0"	9'-4"	8'-9"	11'-7"	10'-9"	10'-6"	9'-5"	8'-7"	12'-2"	11'-3"	11'-1"	10'-0"	9'-2"	12'-7"	11'-9"	11'-6"	10'-8"	9'-9"
130.0	10'-10"	10'-1"	9'-11"	9'-2"	8'-8"	11'-5"	10'-7"	10'-3"	9'-2"	8'-5"	12'-0"	11'-1"	10'-11"	9'-10"	9'-0"	12'-5"	11'-7"	11'-4"	10'-5"	9'-6"
135.0	10'-9"	10'-0"	9'-9"	9'-1"	8'-7"	11'-4"	10'-5"	10'-1"	9'-0"	8'-3"	11'-10"	11'-0"	10'-9"	9'-8"	8'-10"	12'-4"	11'-5"	11'-2"	10'-3"	9'-4"
140.0	10'-7"	9'-10"	9'-8"	9'-0"	8'-5"	11'-2"	10'-2"	9'-11"	8'-10"	8'-1"	11'-8"	10'-10"	10'-7"	9'-6"	8'-8"	12'-2"	11'-3"	11'-1"	10'-1"	9'-2"
145.0	10'-6"	9'-9"	9'-7"	8'-10"	8'-4"	11'-0"	10'-0"	9'-9"	8'-8"	7'-11"	11'-7"	10'-8"	10'-5"	9'-4"	8'-6"	12'-0"	11'-2"	10'-11"	9'-11"	9'-0"
150.0	10'-4"	9'-7"	9'-5"	8'-9"	8'-3"	10'-11"	9'-10"	9'-7"	8'-7"	7'-10"	11'-5"	10'-6"	10'-3"	9'-2"	8'-4"	11'-10"	11'-0"	10'-10"	9'-9"	8'-10"
155.0	10'-3"	9'-6"	9'-4"	8'-8"	8'-2"	10'-10"	9'-8"	9'-5"	8'-5"	7'-8"	11'-3"	10'-4"	10'-1"	9'-0"	8'-3"	11'-9"	10'-11"	10'-8"	9'-7"	8'-9"
160.0	10'-2"	9'-5"	9'-3"	8'-7"	8'-1"	10'-8"	9'-6"	9'-3"	8'-3"	7'-7"	11'-2"	10'-2"	9'-11"	8'-10"	8'-1"	11'-7"	10'-9"	10'-6"	9'-5"	8'-7"
165.0	10'-1"	9'-4"	9'-2"	8'-6"	8'-0"	10'-6"	9'-5"	9'-2"	8'-2"	7'-5"	11'-1"	10'-0"	9'-9"	8'-9"	8'-0"	11'-6"	10'-8"	10'-4"	9'-3"	8'-5"
170.0	9'-11"	9'-3"	9'-1"	8'-5"	7'-11"	10'-4"	9'-3"	9'-0"	8'-1"	7'-4"	10'-11"	9'-11"	9'-7"	8'-7"	7'-10"	11'-5"	10'-6"	10'-2"	9'-1"	8'-4"
175.0	9'-10"	9'-2"	9'-0"	8'-4"	7'-10"	10'-2"	9'-1"	8'-10"	7'-11"	7'-3"	10'-10"	9'-9"	9'-6"	8'-6"	7'-9"	11'-3"	10'-4"	10'-1"	9'-0"	8'-2"
180.0	9'-9"	9'-1"	8'-11"	8'-3"	7'-9"	10'-1"	9'-0"	8'-9"	7'-10"	7'-2"	10'-9"	9'-7"	9'-4"	8'-4"	7'-8"	11'-2"	10'-2"	9'-11"	8'-10"	8'-1"
185.0	9'-8"	9'-0"	8'-10"	8'-2"	7'-8"	9'-11"	8'-10"	8'-7"	7'-9"	7'-0"	10'-7"	9'-6"	9'-3"	8'-3"	7'-6"	11'-1"	10'-1"	9'-9"	8'-9"	8'-0"
190.0	9'-7"	8'-11"	8'-9"	8'-1"	7'-8"	9'-9"	8'-9"	8'-6"	7'-7"	6'-11"	10'-5"	9'-4"	9'-1"	8'-2"	7'-5"	11'-0"	9'-11"	9'-8"	8'-8"	7'-11"
195.0	9'-6"	8'-10"	8'-8"	8'-0"	7'-7"	9'-8"	8'-8"	8'-5"	7'-6"	6'-10"	10'-4"	9'-3"	9'-0"	8'-0"	7'-4"	10'-11"	9'-10"	9'-6"	8'-6"	7'-9"

PRODUCT RENEWED
as complying with the Florida Building Code
Acceptance No 05-0623.05
Expiration Date 11/08/11
By
Miami Dade Product Control Division

F.B.C. (High Velocity Hurricane Zone)

NOTES : REFER TO ELEVATIONS ON SHEET 1A OF 15

1-. FOR MULLIONS INSTALLED W/O STORM BARS

A) MULLION SPACING SHALL BE SUCH THAT MAXIMUM SLAT SPAN SHALL NOT BE EXCEEDED

2-. FOR MULLIONS INSTALLED W/ STORM BARS & HEADERS

A) MULLION SPACING SHALL BE SUCH THAT MAXIMUM HEADER SPAN SHALL NOT BE EXCEEDED

B) STORM BAR SPACING SHALL BE SUCH THAT MAXIMUM SLAT SPAN SHALL NOT BE EXCEEDED

MAY 12 2006

© 2005 TILTECO INC.

TILTECO INC.
TILLIT TESTING & ENGINEERING COMPANY
6355 N.W. 36th. St., Ste. 305, VIRGINIA GARDENS, FL 33166
Phone : (305)871-1530 . Fax : (305)871-1531
e-mail: tilteco@aol.com
EB-0006719
WALTER A. TILLIT Jr. P. E.
FLORIDA Lic. # 44167

55 mm AL3-E SLAT ROLL-UP SHUTTER

QMI ROLL SHUTTER

1661 GLENLAKE AVENUE
ITASCA, ILLINOIS. 60143

REV. No	DESCRIPTION	DATE	REV. No	DESCRIPTION	DATE
1	OLD DWG 02-363	5/4/05	3		
2	COMPANY NAME	5/11/06	4		

DRAWN BY M.C.V. / L.C.

5/4/05 DATE

05-090 DRAWING No

SHEET 15 OF 15