MIAMI-DADE COUNTY
BUILDING CODE COMPLIANCE OFFICE (BCCO)
PRODUCT CONTROL DIVISION

MIAMI-DADE COUNTY, FLORIDA
METRO-DADE FLAGLER BUILDING

140 WEST FLAGLER STREET, SUITE 1603
MIAMI, FLORIDA 33130-1563
(305) 375-2901 FAX (305) 375-2908
www.buildingcodeonline.com

NOTICE OF ACCEPTANCE (NOA)

EGS International LLC
3133 SW 25 Street
Pembroke Park, FL 33009

SCOPE:

This NOA is being issued under the applicable rules and regulations governing the use of construction materials. The documentation submitted has been reviewed by Miami-Dade County Product Control Division and accepted by the Board of Rules and Appeals (BORA) to be used in Miami Dade County and other areas where allowed by the Authority Having Jurisdiction (AHJ).

This NOA shall not be valid after the expiration date stated below. The Miami-Dade County Product Control Division (In Miami Dade County) and/or the AHJ (in areas other than Miami Dade County) reserve the right to have this product or material tested for quality assurance purposes. If this product or material fails to perform in the accepted manner, the manufacturer will incur the expense of such testing and the AHJ may immediately revoke, modify, or suspend the use of such product or material within their jurisdiction. BORA reserves the right to revoke this acceptance, if it is determined by Miami-Dade County Product Control Division that this product or material fails to meet the requirements of the applicable building code.

This product is approved as described herein, and has been designed to comply with the Florida Building Code, including the High Velocity Hurricane Zone.

DESCRIPTION: Series 5500 Aluminum Window Wall System-S.M.I.

APPROVAL DOCUMENT: Drawing No. **W05-27,** titled "Series 5500 Alum Window Wall System S.M.I.", sheets 1 through 8 of 8, prepared by AL-Farooq Corporation, dated 06/09/05, signed and sealed by Humayoun Farooq, P.E., bearing the Miami-Dade County Product Control Approval stamp with the Notice of Acceptance number and approval date by the Miami-Dade County Product Control Division.

MISSILE IMPACT RATING: Small Missile Impact

LABELING: Each unit shall bear a permanent label with the manufacturer's name or logo, city, state and following statement: "Miami-Dade County Product Control Approved", unless otherwise noted herein.

RENEWAL of this NOA shall be considered after a renewal application has been filed and there has been no change in the applicable building code negatively affecting the performance of this product.

TERMINATION of this NOA will occur after the expiration date or if there has been a revision or change in the materials, use, and/or manufacture of the product or process. Misuse of this NOA as an endorsement of any product, for sales, advertising or any other purposes shall automatically terminate this NOA. Failure to comply with any section of this NOA shall be cause for termination and removal of NOA.

ADVERTISEMENT: The NOA number preceded by the words Miami-Dade County, Florida, and followed by the expiration date may be displayed in advertising literature. If any portion of the NOA is displayed, then it shall be done in its entirety.

INSPECTION: A copy of this entire NOA shall be provided to the user by the manufacturer or its distributors and shall be available for inspection at the job site at the request of the Building Official.

This NOA consists of this page 1 and evidence pages E-1, as well as approval document mentioned above

The submitted documentation was reviewed by **Herminio F. Gonzalez, P.E., Director, BCCO**

PRODUCT CONTROL ACCEPTED 8/4/05

NOA No 05-0624.01
Expiration Date: August 25, 2010
Approval Date: August 25, 2005

EGS International LLC

NOTICE OF ACCEPTANCE: EVIDENCE SUBMITTED

A. DRAWINGS

1. Manufacturers die drawings and sections.
2. Drawing No. **W05-27,** titled "Series 5500 Alum Window Wall System S.M.I.", sheets 1 through 8 of 8, prepared by AL-Farooq Corporation, dated 06/09/05, signed and sealed by Humayoun Farooq, P.E.

B. TESTS

1. Test reports on 1) Air Infiltration Test, per FBC, TAS 202-94
   2) Uniform Static Air Pressure Test, Loading per FBC, TAS 202-94
   3) Water Resistance Test, per FBC, TAS 202-94
   4) Small Missile Impact Test per FBC, TAS 201-94
   5) Cyclic Wind Pressure Loading per FBC, TAS 203-94

   along with marked-up drawings and installation diagram of aluminum fixed window, prepared by Fenestration Testing Laboratory, Inc., Test Report No. **FTL-3604,** dated 10/31/02, signed and sealed by Joseph C. Chan, P.E.

C. CALCULATIONS

1. Anchor Calculations, ASTM-E1300, and structural analysis, prepared by AL-Farooq Corporation, dated 06/07/05, signed and sealed by Humayoun Farooq, P.E.

D. QUALITY ASSURANCE

1. Miami Dade Building Code Compliance Office (BCCO).

E. MATERIAL CERTIFICATIONS

1. Notice of Acceptance No. 01-0205.02 issued to "Solutia, Inc." for "Saflex Saflex/Keepsafe Maximum", dated 05/17/01, expiring on 05/21/06.

F. STATEMENTS

1. Statement letter of conformance and no financial interest, dated June 07, 2005, signed and sealed by Humayoun Farooq, P.E.

G. OTHER

1. Letter from the consultant, dated 07/06/05, stating that the product is in compliance with the Florida Building Code (FBC).

for M Khan

Herminio F. Gonzalez, P.E.
Director, Building Code Compliance Office
NOA No 05-0624.01
Expiration Date: August 25, 2010
Approval Date: August 25, 2005

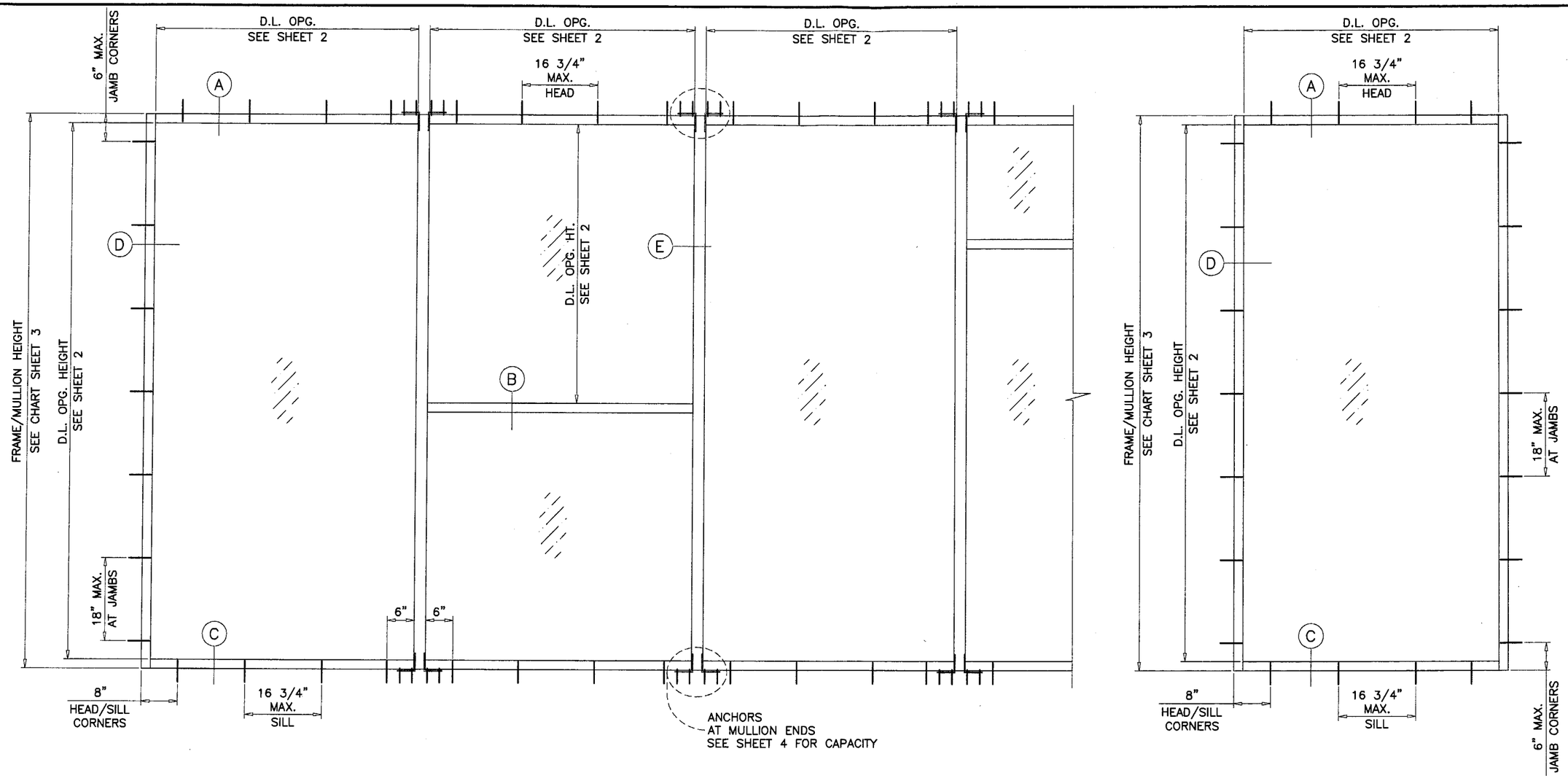

SERIES 5500 ALUMINUM WINDOW WALL SYSTEM

THIS PRODUCT IS RATED FOR SMALL MISSILE IMPACT.
MIAMI–DADE COUNTY APPROVED IMPACT RESISTANT SHUTTERS REQUIRED FOR INSTALLATIONS UP TO 30 FT. OF GRADE.
SHUTTERS NOT REQD. FOR INSTALLATIONS ABOVE 30 FT. OF GRADE.

CODE REQUIREMENTS FOR SAFEGUARDS MUST BE OBSERVED.

THIS PRODUCT HAS ALSO BEEN TESTED TO ANSI Z97.1.

THIS PRODUCT HAS BEEN DESIGNED AND TESTED TO COMPLY WITH THE REQUIREMENTS OF THE FLORIDA BUILDING CODE 2004 EDITION INCLUDING HIGH VELOCITY HURRICANE ZONE.

WOOD BUCKS BY OTHERS, MUST BE ANCHORED PROPERLY TO TRANSFER LOADS TO THE STRUCTURE.

ANCHORS SHALL BE AS LISTED, SPACED AS SHOWN ON DETAILS. ANCHOR EMBEDMENT TO BASE MATERIAL SHALL BE BEYOND WALL DRESSING OR STUCCO.

ALL STEEL IN CONTACT WITH ALUMINUM TO BE PAINTED OR PLATED.

ANCHORING OR LOADING CONDITIONS NOT SHOWN IN THESE DETAILS ARE NOT PART OF THIS APPROVAL.

A 33% INCREASE IN ALLOWABLE STRESS IS USED IN DESIGN OF WOOD ANCHORS ONLY.

TYPICAL ELEVATIONS

INSTRUCTIONS:

USE CHARTS AS FOLLOWS.

STEP 1 DETERMINE DESIGN WIND LOAD REQUIREMENTS BASED ON WIND VELOCITY, BLDG. HEIGHT, WIND ZONE USING APPLICABLE ASCE 7 STANDARD.

STEP 2 SEE CHARTS ON SHEETS 2 FOR DESIGN LOAD CAPACITY OF DESIRED GLASS SIZE.

STEP 3 CHECK MULLION CAPACITY FOR A GIVEN SPACING AND HEIGHT USING CHARTS ON SHEET 3
THE CAPACITY SHOULD EXCEED THE DESIGN LOAD.

STEP 4 USING CHART ON SHEETS 4 SELECT ANCHOR OPTION WITH DESIGN RATING MORE THAN DESIGN LOAD SPECIFIED IN STEP 1 ABOVE.

STEP 5 THE LOWEST VALUE RESULTING FROM STEPS 2, 3 AND 4 SHALL APPLY TO ENTIRE SYSTEM.

Approved as complying with the Florida Building Code
Date 08/25/05
NOA# 05-0624.01
Miami-Dade Product Control Division
By

LAMINATED GLASS
SMALL MISSILE IMPACT

Engr: DR. HUMAYOUN FAROOQ
STRUCTURES
FLA. PE # 16557
C.A.N. 3538

JUN 21 2005

AL-FAROOQ CORPORATION
ENGINEERS, PLANNERS & PRODUCT DESIGN
1235 SW 87 AVE
MIAMI, FLORIDA 33174
TEL. (305) 264-8100 FAX. (305) 262-6978
COMP-ANL\W05-27EGS

S-5500 ALUM WINDOW WALL SYSTEM (S.M.I.)

EGS INTERNATIONAL LLC
3133 S.W. 25TH STREET
PEMBROKE PARK, FL. 33009
TEL. (954) 964-1441 FAX. (954) 964-1533

revisions:			
no	date	by	description

date: 06-09-05
scale: 1/2"=1'-0"
dr. by: HAMID
chk. by:

drawing no.
W05-27

GLASS LOAD CAPACITY - PSF			
NOMINAL DIMS.		9/16" LAM. GLASS	
D.L.O. WIDTH	D.L.O. HEIGHT	EXT.(+)	INT.(−)
33−1/2"	86"	100.0	130.0
36−1/2"		100.0	130.0
39−1/2"		100.0	130.0
42−1/2"		100.0	130.0
45−1/2"		100.0	130.0
48−1/2"		100.0	130.0
51−1/2"		100.0	130.0
54−1/2"		100.0	130.0
57−1/2"		100.0	130.0
33−1/2"	92"	100.0	130.0
36−1/2"		100.0	130.0
39−1/2"		100.0	130.0
42−1/2"		100.0	130.0
45−1/2"		100.0	130.0
48−1/2"		100.0	130.0
51−1/2"		100.0	130.0
54−1/2"		100.0	130.0
57−1/2"		100.0	128.0
33−1/2"	98"	100.0	130.0
36−1/2"		100.0	130.0
39−1/2"		100.0	130.0
42−1/2"		100.0	130.0
45−1/2"		100.0	130.0
48−1/2"		100.0	130.0
51−1/2"		100.0	130.0
54−1/2"		100.0	126.0
33−1/2"	104"	100.0	130.0
36−1/2"		100.0	130.0
39−1/2"		100.0	130.0
42−1/2"		100.0	130.0
45−1/2"		100.0	130.0
48−1/2"		100.0	130.0
51−1/2"		100.0	124.0
33−1/2"	110"	100.0	130.0
36−1/2"		100.0	130.0
39−1/2"		100.0	130.0
42−1/2"		100.0	130.0
45−1/2"		100.0	130.0
48−1/2"		100.0	124.0
33−1/2"	116"	100.0	130.0
36−1/2"		100.0	130.0
39−1/2"		100.0	130.0
42−1/2"		100.0	130.0
45−1/2"		100.0	125.0

NOTE:
GLASS CAPACITY CHART IS BASED ON ASTM E1300−02
FOR 3 SEC. GUSTS AND MAX. CYCLIC LOAD TESTED.
FOR WIND LOADS BASED ON DIFFERENT WIND DURATION
LOADING CRITERIA (WIND TUNNEL TESTS) APPLY FACTORS
AS SPECIFIED IN TABLE X6.1 OF E1300−02.
OR CHECK GLASS CAPACITY ON JOB TO JOB BASIS.

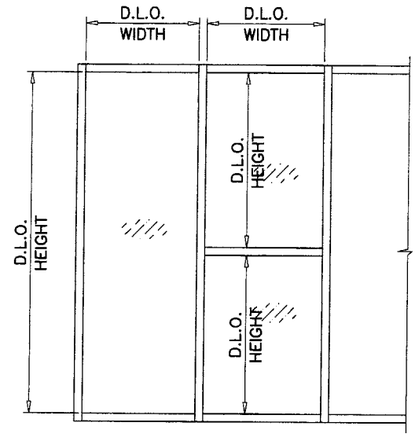

GLASS CAPACITY CHART

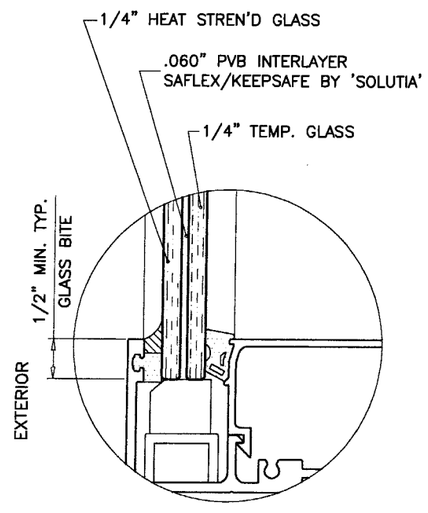

GLAZING DETAIL

Approved as complying with the
Florida Building Code
Date 08/25/05
NOA# 05-0624.01
Miami-Dade Product Control
Division
By

Engr: DR. HUMAYOUN FAROOQ
STRUCTURES
FLA. PE # 16557
C.A.N. 3538
JUN 2 1 2005

AL-FAROOQ CORPORATION
ENGINEERS, PLANNERS & PRODUCT DESIGN
1235 SW 87 AVE
MIAMI, FLORIDA 33174
TEL. (305) 264-8100 FAX. (305) 262-6978
COMP-ANL\W05-27EGS

S-5500 ALUM WINDOW WALL SYSTEM (S.M.I.)

EGS INTERNATIONAL LLC
3133 S.W. 25TH STREET
PEMBROKE PARK, FL. 33009
TEL. (954) 964-1441 FAX. (954) 964-1533

revisions:

no	date	by	description

date: 06-09-05
scale: 1/2" = 1"
dr. by: HAMID
chk. by:

drawing no.
W05-27

DESIGN LOAD CAPACITY – PSF WITHOUT INTERMEDIATE HORIZONTALS

NOMINAL DIMS.		FRAME MULLION	
WIDTH (W)	FRAME HEIGHT	EXT.(+)	INT.(–)
24"	90"	100.0	130.0
30"		100.0	130.0
36"		100.0	130.0
42"		100.0	130.0
48"		100.0	130.0
54"		100.0	130.0
60"		100.0	130.0
24"	96"	100.0	130.0
30"		100.0	130.0
36"		100.0	130.0
42"		100.0	130.0
48"		100.0	130.0
54"		100.0	130.0
60"		100.0	130.0
24"	102"	100.0	130.0
30"		100.0	130.0
36"		100.0	130.0
42"		100.0	130.0
48"		100.0	130.0
54"		100.0	130.0
24"	108"	100.0	130.0
30"		100.0	130.0
36"		100.0	130.0
42"		100.0	130.0
48"		100.0	130.0
24"	114"	100.0	130.0
30"		100.0	130.0
36"		100.0	130.0
42"		100.0	130.0
48"		100.0	122.0
24"	120"	100.0	130.0
30"		100.0	130.0
36"		100.0	130.0
42"		100.0	127.7
48"		100.0	115.2

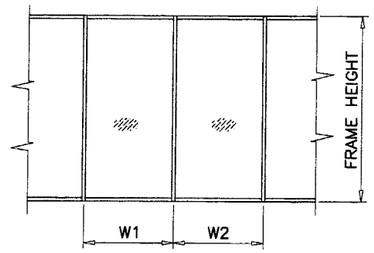

$$\text{WIDTH (W)} = \frac{W1 + W2}{2}$$

DESIGN LOAD CAPACITY – PSF WITH INTERMEDIATE HORIZONTALS

NOMINAL DIMS.		FRAME MULLION	
WIDTH (W)	FRAME HEIGHT	EXT.(+)	INT.(–)
24"	90"	100.0	130.0
30"		100.0	130.0
36"		100.0	130.0
42"		100.0	130.0
48"		100.0	130.0
54"		100.0	130.0
60"		100.0	122.9
24"	96"	100.0	130.0
30"		100.0	130.0
36"		100.0	130.0
42"		100.0	130.0
48"		100.0	130.0
54"		100.0	128.0
60"		100.0	115.2
24"	102"	100.0	130.0
30"		100.0	130.0
36"		100.0	130.0
42"		100.0	130.0
48"		100.0	130.0
54"		100.0	120.5
24"	108"	100.0	130.0
30"		100.0	130.0
36"		100.0	130.0
42"		100.0	130.0
48"		100.0	128.0
24"	114"	100.0	130.0
30"		100.0	130.0
36"		100.0	130.0
42"		100.0	130.0
48"		100.0	121.3
24"	120"	100.0	130.0
30"		100.0	130.0
36"		100.0	130.0
42"		100.0	127.7
48"		100.0	115.2

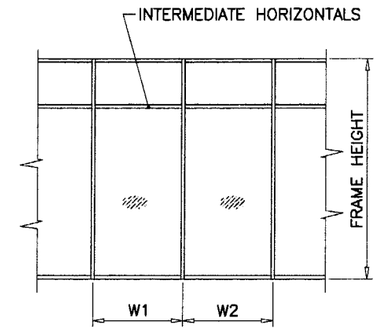

$$\text{WIDTH (W)} = \frac{W1 + W2}{2}$$

Approved as complying with the Florida Building Code
Date 08/23/05
NOA# 05-0624.01
Miami-Dade Product Control Division
By

Engr: DR. HUMAYOUN FAROOQ
STRUCTURES
FLA. PE # 16557
C.A.N. 3538
JUN 21 2005

MULLION CAPACITY CHARTS

AL-FAROOQ CORPORATION
ENGINEERS, PLANNERS & PRODUCT DESIGN
1235 SW 87 AVE
MIAMI, FLORIDA 33174
TEL. (305) 264-8100 FAX. (305) 262-6978
COMP-ANL\W05-27EGS

S-5500 ALUM WINDOW WALL SYSTEM (S.M.I.)

EGS INTERNATIONAL LLC
3133 S.W. 25TH STREET
PEMBROKE PARK, FL. 33009
TEL. (954) 964-1441 FAX. (954) 964-1533

revisions:			
no	date	by	description

date: 06-09-05
scale: 1/2" = 1"
dr. by: HAMID
chk. by:

drawing no. W05-27

HEAD/SILL ANCHORS LOAD CAPACITY – PSF
EXT.(+) & INT.(–)

NOMINAL DIMS.		TYPE 'A'	TYPE 'C'	TYPE 'B'	TYPE 'D'
WIDTH (W)	FRAME HEIGHT	A4	C4	B4	D4
24"	72"	130.0	130.0	130.0	130.0
30"		130.0	130.0	130.0	130.0
36"		129.8	130.0	130.0	130.0
42"		117.8	130.0	130.0	130.0
48"		109.5	130.0	130.0	130.0
54"		103.8	128.9	130.0	130.0
60"		100.1	124.3	130.0	130.0
24"	78"	130.0	130.0	130.0	130.0
30"		130.0	130.0	130.0	130.0
36"		116.8	130.0	130.0	130.0
42"		105.4	130.0	130.0	130.0
48"		97.3	120.9	130.0	130.0
54"		91.6	113.8	130.0	130.0
60"		87.6	108.8	130.0	130.0
24"	84"	130.0	130.0	130.0	130.0
30"		121.9	130.0	130.0	130.0
36"		106.2	130.0	130.0	130.0
42"		95.3	118.4	130.0	130.0
48"		87.6	108.8	130.0	130.0
54"		82.0	101.8	129.9	130.0
60"		77.9	96.7	123.4	130.0
24"	90"	130.0	130.0	130.0	130.0
30"		112.1	130.0	130.0	130.0
36"		97.3	120.9	130.0	130.0
42"		87.1	108.1	130.0	130.0
48"		79.6	98.9	126.2	130.0
54"		74.2	92.1	117.5	130.0
60"		70.1	87.0	111.0	130.0
24"	96"	125.1	130.0	130.0	130.0
30"		103.8	128.9	130.0	130.0
36"		89.8	111.6	130.0	130.0
42"		80.1	99.5	126.9	130.0
48"		73.0	90.7	115.7	130.0
54"		67.7	84.1	107.3	130.0
60"		63.7	79.1	100.9	130.0
24"	102"	116.8	130.0	130.0	130.0
30"		96.7	120.1	130.0	130.0
36"		83.4	103.6	130.0	130.0
42"		74.2	92.1	117.5	130.0
48"		67.4	83.7	106.8	130.0
54"		62.3	77.4	98.7	130.0
24"	108"	109.5	130.0	130.0	130.0
30"		90.4	112.3	130.0	130.0
36"		77.9	96.7	123.4	130.0
42"		69.0	85.8	109.4	130.0
48"		62.6	77.7	99.1	130.0
24"	114"	103.1	128.0	130.0	130.0
30"		84.9	105.5	130.0	130.0
36"		73.0	90.7	115.7	130.0
42"		64.6	80.2	102.3	130.0
48"		58.4	72.5	92.5	130.0
24"	120"	97.3	120.9	130.0	130.0
30"		80.1	99.5	126.9	130.0
36"		68.7	85.3	108.9	130.0
42"		60.7	75.4	96.1	130.0
48"		54.8	68.0	86.8	127.8

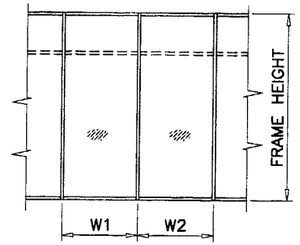

$$\text{WIDTH (W)} = \frac{W1 + W2}{2}$$

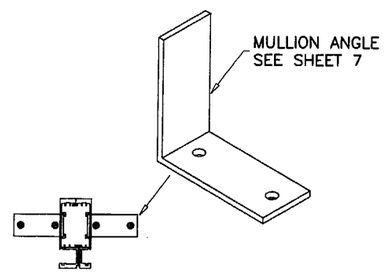

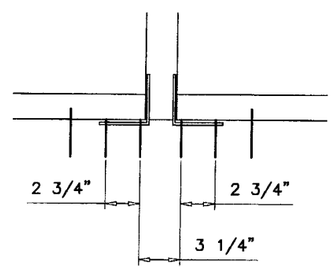

A4, B4, C4, D4

ANCHORS TYPES: SEE SHEET 5 FOR DESCRIPTION

A4 = (2) ANCHORS TYPE 'A' AT EACH MULLION CLIP
C4 = (2) ANCHORS TYPE 'B' AT EACH MULLION CLIP
B4 = (2) ANCHORS TYPE 'C' AT EACH MULLION CLIP
D4 = (2) ANCHORS TYPE 'D' AT EACH MULLION CLIP

ALL OTHER ANCHORS TO BE SPACED AS PER ELEVATION.

JAMB ANCHORS LOAD CAPACITY – PSF
EXT.(+) & INT.(–)

NOMINAL DIMS.		TYPE 'A'	TYPE 'C'	TYPE 'B'
WIDTH (W)	FRAME HEIGHT	18" O.C.	18" O.C.	18" O.C.
24"	72"	130.0	130.0	130.0
30"		130.0	130.0	130.0
36"		130.0	130.0	130.0
42"		130.0	130.0	130.0
48"		129.4	130.0	130.0
54"		122.7	130.0	130.0
60"		118.3	130.0	130.0
24"	78"	130.0	130.0	130.0
30"		130.0	130.0	130.0
36"		130.0	130.0	130.0
42"		124.5	130.0	130.0
48"		115.0	130.0	130.0
54"		108.2	130.0	130.0
60"		103.5	130.0	130.0
24"	84"	130.0	130.0	130.0
30"		130.0	130.0	130.0
36"		125.5	130.0	130.0
42"		112.7	130.0	130.0
48"		103.5	130.0	130.0
54"		96.8	123.5	130.0
60"		92.0	117.3	130.0
24"	90"	130.0	130.0	130.0
30"		130.0	130.0	130.0
36"		130.0	130.0	130.0
42"		123.4	130.0	130.0
48"		112.9	130.0	130.0
54"		105.1	130.0	130.0
60"		99.4	126.7	130.0
24"	96"	130.0	130.0	130.0
30"		130.0	130.0	130.0
36"		127.4	130.0	130.0
42"		113.6	130.0	130.0
48"		103.5	130.0	130.0
54"		96.0	122.4	130.0
60"		90.3	115.2	130.0
24"	102"	130.0	130.0	130.0
30"		130.0	130.0	130.0
36"		118.3	130.0	130.0
42"		105.1	130.0	130.0
48"		95.5	121.8	130.0
54"		88.3	112.6	130.0
24"	108"	130.0	130.0	130.0
30"		130.0	130.0	130.0
36"		128.8	130.0	130.0
42"		114.2	130.0	130.0
48"		103.5	130.0	130.0
24"	114"	130.0	130.0	130.0
30"		130.0	130.0	130.0
36"		120.8	130.0	130.0
42"		106.8	130.0	130.0
48"		96.6	123.2	130.0
24"	120"	130.0	130.0	130.0
30"		130.0	130.0	130.0
36"		113.6	130.0	130.0
42"		100.4	128.0	130.0
48"		90.6	115.5	130.0

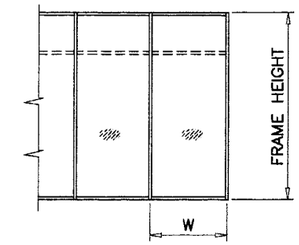

JAMB ANCHORS AT 6" FROM ENDS
AND 18" O.C. MAX. SPACING

Approved as complying with the
Florida Building Code
Date 08/25/05
NOA# 05-0624.01
Miami-Dade Product Control
Division
By

ANCHOR CAPACITY CHARTS

Engr: DR. HUMAYOUN FAROOQ
STRUCTURES
FLA. PE # 16557
C.A.N. 3538

JUN 21 2005

AL-FAROOQ CORPORATION
ENGINEERS, PLANNERS & PRODUCT DESIGN
1235 SW 87 AVE
MIAMI, FLORIDA 33174
TEL. (305) 264-8100 FAX. (305) 262-6978
COMP-ANL\W05-27EGS

S-5500 ALUM WINDOW WALL SYSTEM (S.M.I.)

EGS INTERNATIONAL LLC
3133 S.W. 25TH STREET
PEMBROKE PARK, FL. 33009
TEL. (954) 964-1441 FAX. (954) 964-1533

revisions:

no	date	by	description

date: 06-09-05
scale: 1/2" = 1"
dr. by: HAMID
chk. by:

drawing no.
W05-27

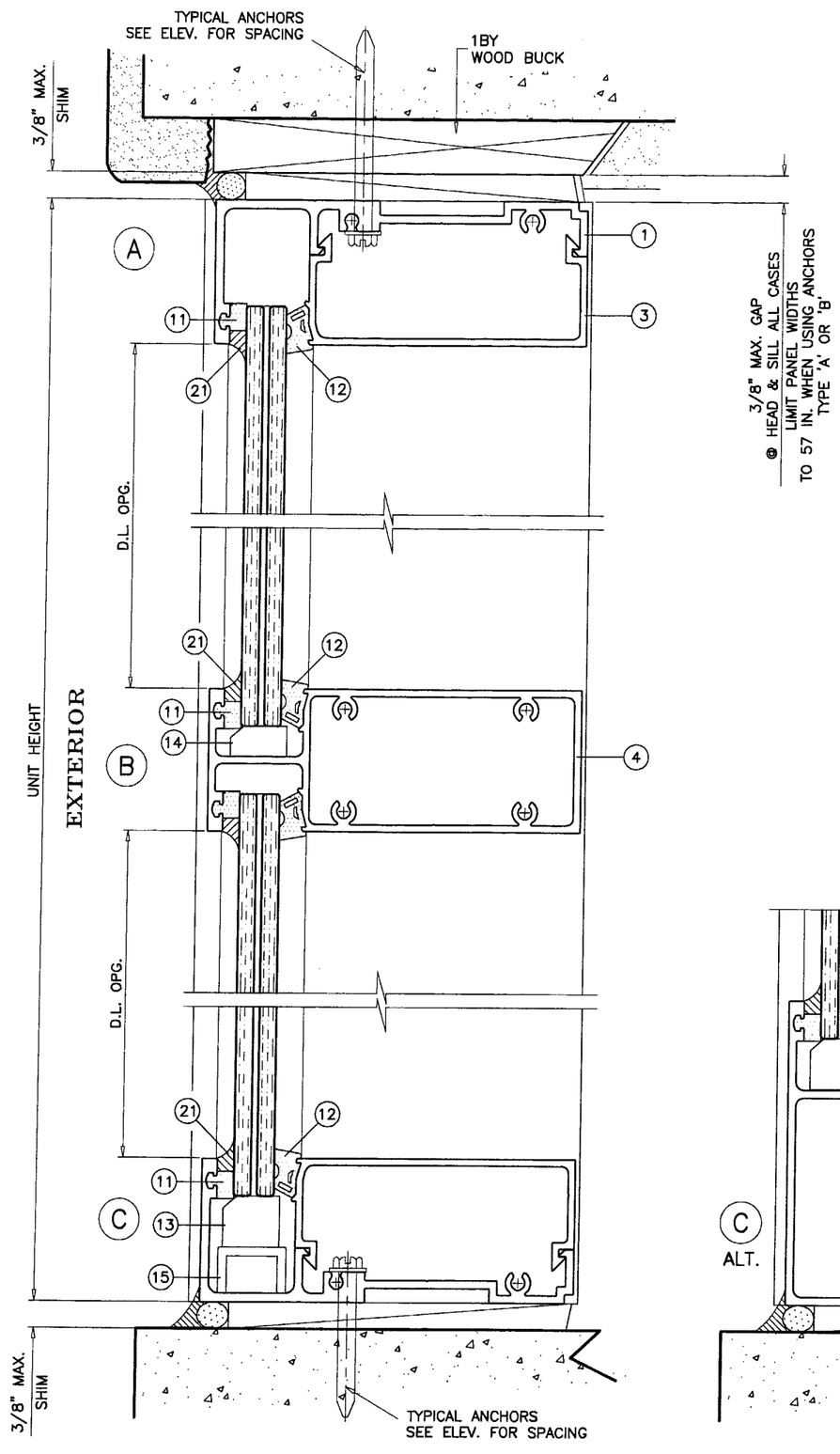

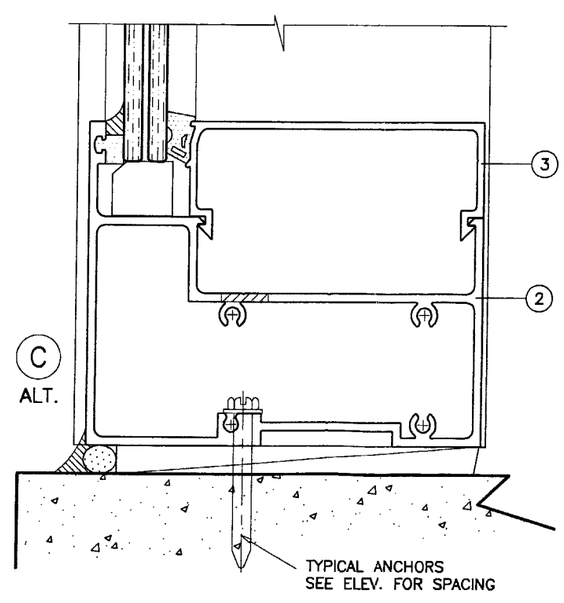

WOOD BUCKS AND METAL STRUCTURES NOT BY EGS MUST SUPPORT LOADS IMPOSED BY GLAZING SYSTEM AND TRANSFER THEM TO THE BUILDING STRUCTURE.

TYPICAL ANCHORS: SEE ELEV. FOR SPACING

TYPE 'A'– 1/4" TAPCONS
INTO 2BY WOOD BUCKS OR WOOD STRUCTURES
1–3/8" MIN. PENETRATION INTO WOOD

THRU 1BY WOOD BUCKS INTO CONC. OR MASONRY
1–1/4" MIN. EMBED INTO CONC. OR MASONRY

TYPE 'B'– 1/4" TAPCONS
DIRECTLY INTO CONC. OR MASONRY
1–1/4" MIN. EMBED INTO CONC. OR MASONRY

TYPE 'C'– 5/16" TAPCONS
INTO WOOD STRUCTURES
1–3/4" MIN. PENETRATION INTO WOOD

THRU 2BY WOOD BUCKS INTO CONC. OR MASONRY
2" MIN. COMBINED EMBED INTO WOOD + MASONRY

THRU 1BY WOOD BUCKS INTO CONC. OR MASONRY
1–1/4" MIN. EMBED INTO CONC. OR MASONRY

TYPE 'D'– 5/16" TAPCONS
DIRECTLY INTO CONC. OR MASONRY
1–3/4" MIN. EMBED INTO CONC. OR MASONRY

TYPE 'E'– #14 SMS OR 1/4" SELF DRILLING SCREWS
INTO METAL STRUCTURES (STEEL OR ALUMINUM 1/8" MIN. THICK.)
STEEL : Fy = 36 KSI MIN.
ALUMINUM : 6063–T5 MIN.
(STEEL IN CONTACT WITH ALUMINUM TO BE PLATED OR PAINTED)

TYPICAL EDGE DISTANCE
INTO CONCRETE AND MASONRY = 3–1/8" MIN. AT HEAD & SILL
= 2–1/2" MIN. AT JAMBS
INTO WOOD STRUCTURE = 1–1/4" MIN.

SEALANTS:

ALL FRAME JOINTS ON EXTERIOR TO BE SEALED WITH TREMCO SPECTREM 2.

Approved as complying with the Florida Building Code
Date 08/25/05
NOA# 05-0024.01
Miami-Dade Product Control Division
By

Engr: DR. HUMAYOUN FAROOQ
STRUCTURES
FLA. PE # 16557
C.A.N. 3538

JUN 21 2005

AL–FAROOQ CORPORATION
ENGINEERS, PLANNERS & PRODUCT DESIGN
1235 SW 87 AVE
MIAMI, FLORIDA 33174
TEL. (305) 264–8100 FAX. (305) 262–6978
COMP–ANL\W05–27EGS

S–5500 ALUM WINDOW WALL SYSTEM (S.M.I.)

EGS INTERNATIONAL LLC
3133 S.W. 25TH STREET
PEMBROKE PARK, FL. 33009
TEL. (954) 964–1441 FAX. (954) 964–1533

revisions:			
no	date	by	description

date: 06–09–05
scale: 1/2" = 1"
dr. by: HAMID
chk. by:

drawing no.
W05–27

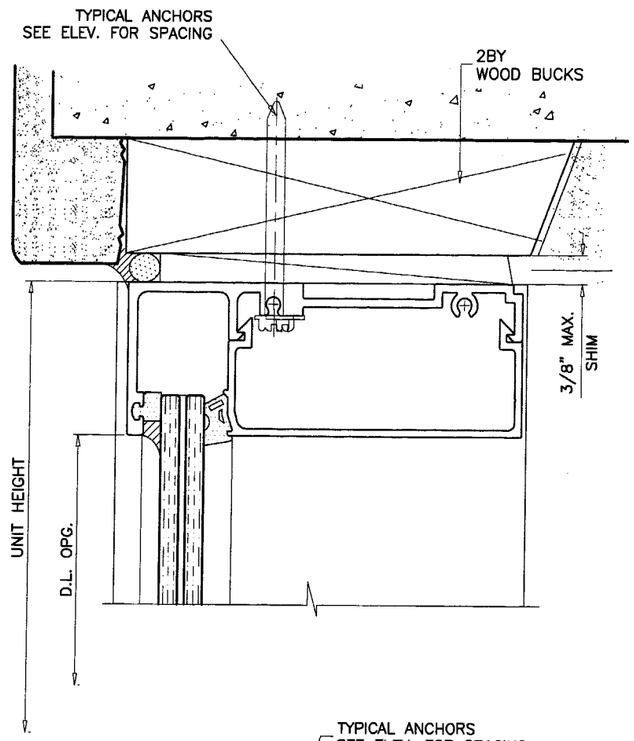

ITEM #	PART #	QUANTITY	DESCRIPTION	MATERIAL	MANF./SUPPLIER/REMARKS
1	EGS-167	AS REQD.	FRAME HEAD/SILL	6063-T6/6105-T6	–
2	EGS-168	AS REQD.	ALT. FRAME SILL	6063-T5/6105-T5	–
3	EGS-169	AS REQD.	GLASS STOP	6063-T5/6105-T5	–
4	EGS-170	AS REQD.	FRAME HORIZONTAL	6063-T6/6105-T6	–
5	EGS-171	AS REQD.	MALE MULLION	6005-T5/6105-T5	–
6	EGS-172	AS REQD.	FEMALE MULLION	6005-T5/6105-T5	–
7	EGS-173	AS REQD.	FRAME JAMB	6063-T6/6105-T6	–
8	EGS-174	AS REQD.	FRAME JAMB WITH POCKET	6063-T6/6105-T6	–
9	EGS-175	AS REQD.	JAMB CHANNEL	6005-T5/6105-T5	–
10	–	–	–	–	–
11	EGS-76	AS REQD.	EXTERIOR GASKET	EPDM SPONGE	TREMCO #TX-1065E
12	EGS-77	AS REQD.	INTERIOR GASKET	EPDM	TREMCO #TR-1507E
13	EGS-74	AS REQD.	SETTING BLOCKS (3/4 X 3/4 X 4")	NEOPRENE	AT 1/8 POINTS
14	EGS-75	AS REQD.	SETTING BLOCKS (1/2 X 7/8 X 4")	NEOPRENE	AT 1/8 POINTS
15	–	AS REQD.	CHANNEL (5/8 X 1 X 5/8 X 1/8") 4" LONG	6063-T5	AT 1/8 POINTS
16	–	–	–	–	–
17	#12 X 1"	AS REQD.	ASSEMBLY SCREWS	ST/ST	TH PHIL
18	#12-24 X 1/2"	AS REQD.	JAMB CHANNEL SCREWS	ST/ST	RH PHIL AT 6" FROM ENDS & 18" O.C.
19	–	2/ MULL END	MULLION ANGLE (4 X 4 X 3/16") 1-3/4" LONG	6063-T6	–
20	2684	AS REQD.	ACCESS HOLE PLUG	–	HEYCO MOLDED PRODUCTS INC.
21	SPECTREM 2	–	GLAZING COMPOUND	SILICONE	TREMCO

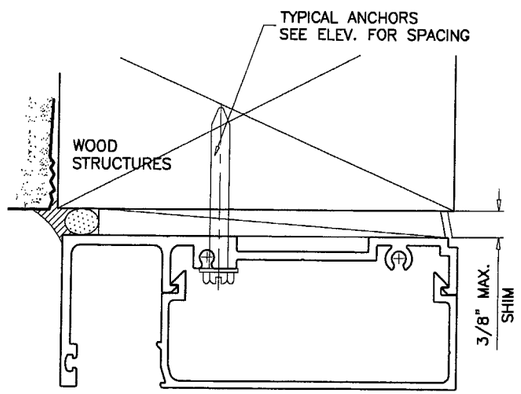

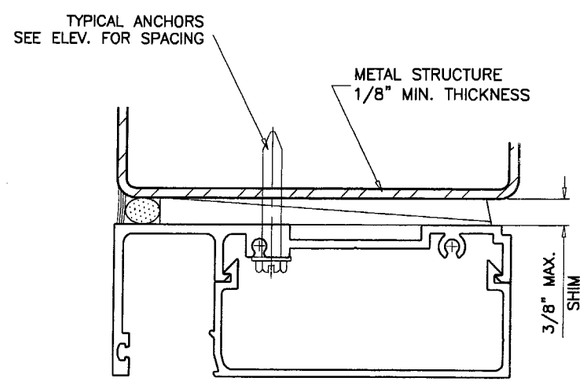

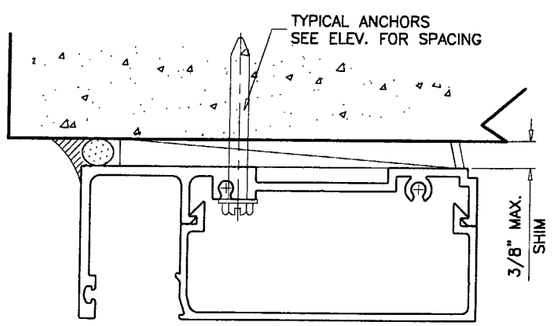

Approved as complying with the Florida Building Code.
Date 08/25/05
NOA# 05-0629.01
Miami-Dade Product Control Division
By

Engr: DR. HUMAYOUN FAROOQ
STRUCTURES
FLA. PE # 16557
C.A.N. 3538

JUN 21 2005

AL-FAROOQ CORPORATION
ENGINEERS, PLANNERS & PRODUCT DESIGN
1235 SW 87 AVE
MIAMI, FLORIDA 33174
TEL. (305) 264-8100 FAX. (305) 262-6978
COMP-ANL\W05-27EGS

S-5500 ALUM WINDOW WALL SYSTEM (S.M.I.)

EGS INTERNATIONAL LLC
3133 S.W. 25TH STREET
PEMBROKE PARK, FL. 33009
TEL. (954) 964-1441 FAX. (954) 964-1533

revisions:			
no	date	by	description

date: 06-09-05
scale: 1/2" = 1"
dr. by: HAMID
chk. by:

drawing no.
W05-27

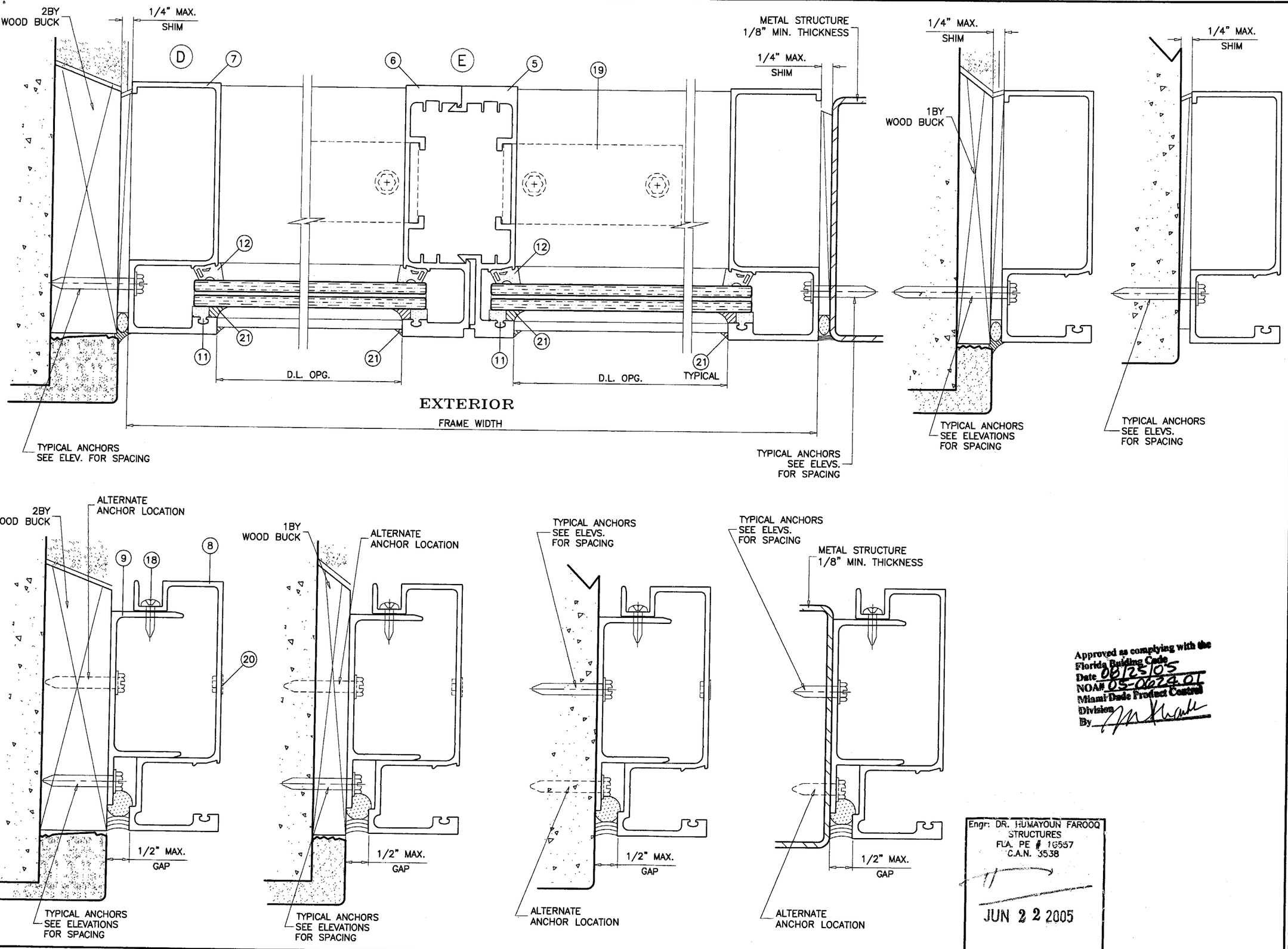

Approved as complying with the Florida Building Code
Date 08/25/05
NOA# 05-0624.01
Miami-Dade Product Control Division
By

Engr: DR. HUMAYOUN FAROOQ
STRUCTURES
FLA. PE # 16557
C.A.N. 3538

JUN 22 2005

AL-FAROOQ CORPORATION
ENGINEERS, PLANNERS & PRODUCT DESIGN
1235 SW 87 AVE
MIAMI, FLORIDA 33174
TEL. (305) 264-8100 FAX. (305) 262-6978
COMP-ANL\W05-27EGS

S-5500 ALUM WINDOW WALL SYSTEM (S.M.I.)

EGS INTERNATIONAL LLC
3133 S.W. 25TH STREET
PEMBROKE PARK, FL. 33009
TEL. (954) 964-1441 FAX. (954) 964-1533

revisions:

no	date	by	description

date: 06-09-05
scale: 1/2" = 1"
dr. by: HAMID
chk. by:

drawing no. W05-27

sheet 7 of 8

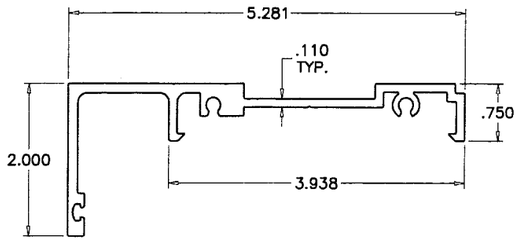

1 FRAME HEAD/SILL

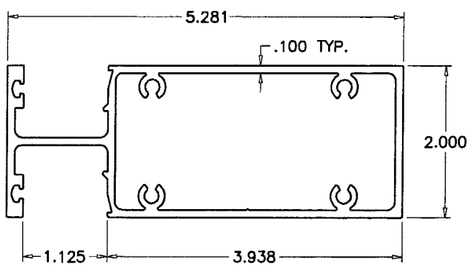

4 FRAME HORIZONTAL

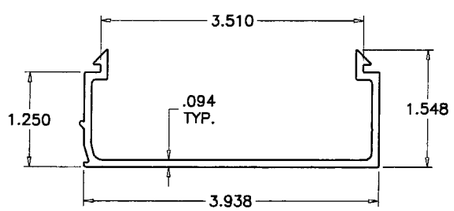

3 GLASS STOP

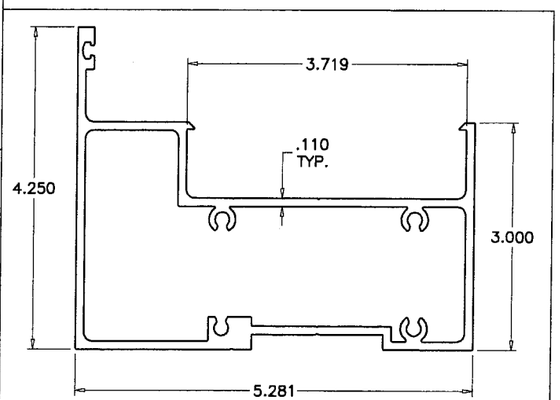

2 ALT. FRAME SILL

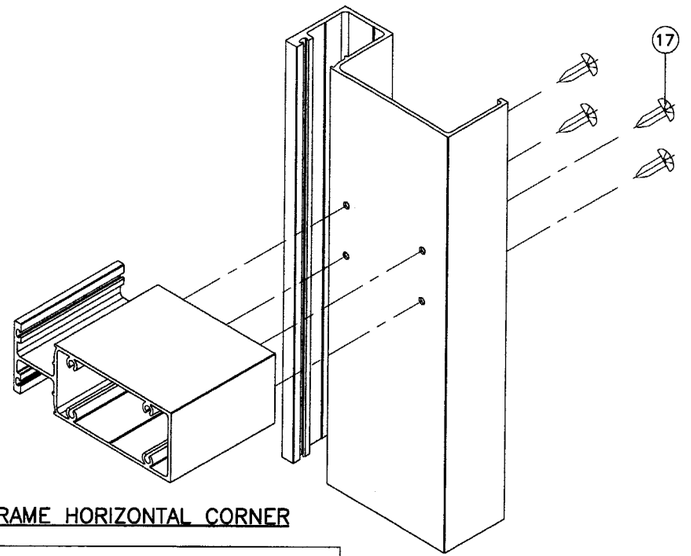

FRAME HORIZONTAL CORNER

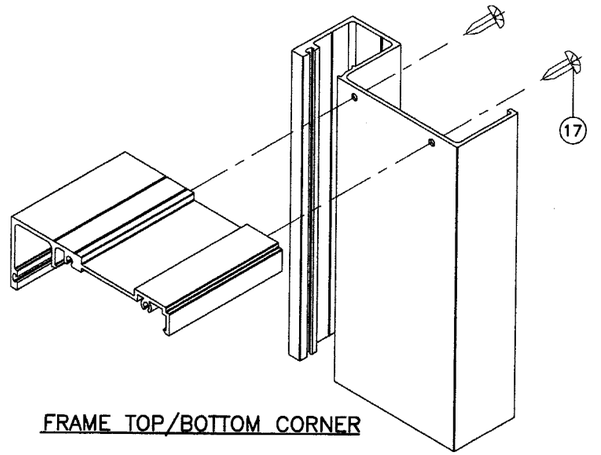

FRAME TOP/BOTTOM CORNER

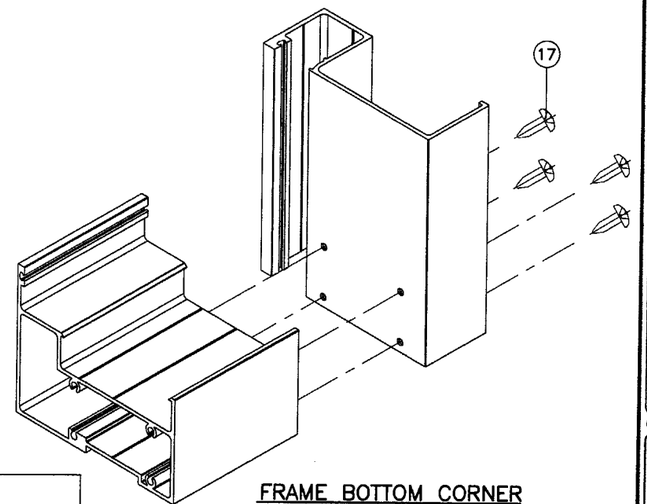

FRAME BOTTOM CORNER

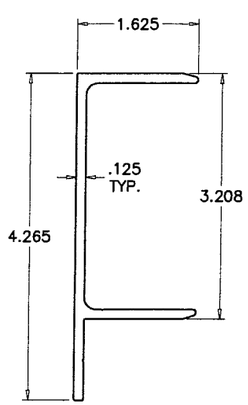

9 JAMB CHANNEL

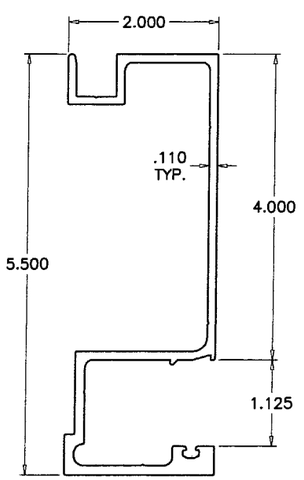

8 FRAME JAMB W/ POCKET

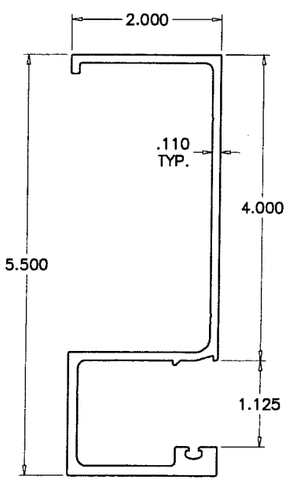

7 FRAME JAMB

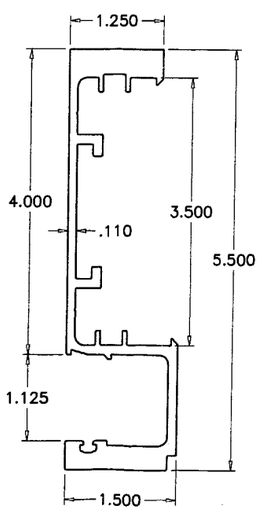

6 FEMALE MULLION

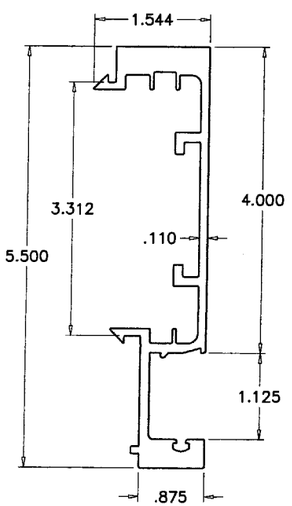

5 MALE MULLION

Approved as complying with the Florida Building Code
Date 08/25/05
NOA# 05-0624.01
Miami-Dade Product Control Division
By

Engr: DR. HUMAYOUN FAROOQ
STRUCTURES
FLA. PE # 16557
C.A.N. 3538

JUN 2 1 2005

AL-FAROOQ CORPORATION
ENGINEERS, PLANNERS & PRODUCT DESIGN
1235 SW 87 AVE
MIAMI, FLORIDA 33174
TEL. (305) 264-8100 FAX. (305) 262-6978
COMP-ANL\W05-27EGS

S-5500 ALUM WINDOW WALL SYSTEM (S.M.I.)

EGS INTERNATIONAL LLC
3133 S.W. 25TH STREET
PEMBROKE PARK, FL. 33009
TEL. (954) 964-1441 FAX. (954) 964-1533

revisions:		
no	date	by description

date: 06-09-05
scale: 1/2" = 1"
dr. by: HAMID
chk. by:

drawing no.
W05-27