MIAMI-DADE COUNTY, FLORIDA
METRO-DADE FLAGLER BUILDING
140 WEST FLAGLER STREET, SUITE 1603
MIAMI, FLORIDA 33130-1563
(305) 375-2901 FAX (305) 375-2908
www.buildingcodeonline.com

BUILDING CODE COMPLIANCE OFFICE (BCCO)
PRODUCT CONTROL DIVISION

NOTICE OF ACCEPTANCE (NOA)

Trainor Glass Company
1101 13th Street West
Rivera Beach, FL 33404

SCOPE:

This NOA is being issued under the applicable rules and regulations governing the use of construction materials. The documentation submitted has been reviewed by Miami-Dade County Product Control Division and accepted by the Board of Rules and Appeals (BORA) to be used in Miami Dade County and other areas where allowed by the Authority Having Jurisdiction (AHJ).

This NOA shall not be valid after the expiration date stated below. The Miami-Dade County Product Control Division (In Miami Dade County) and/or the AHJ (in areas other than Miami Dade County) reserve the right to have this product or material tested for quality assurance purposes. If this product or material fails to perform in the accepted manner, the manufacturer will incur the expense of such testing and the AHJ may immediately revoke, modify, or suspend the use of such product or material within their jurisdiction. BORA reserves the right to revoke this acceptance, if it is determined by Miami-Dade County Product Control Division that this product or material fails to meet the requirements of the applicable building code.
This product is approved as described herein, and has been designed to comply with the Florida Building Code, including the High Velocity Hurricane Zone.

DESCRIPTION: Series "TCW250P" Aluminum Curtain Wall System W/Reinforced Mullions - LMR

APPROVAL DOCUMENT: Drawing No. **TCW250P-LMR,** titled "TCW-250P LMR Series", sheets 1 through 9 of 9, dated 08/23/04 with revision "1" on 07/21/05, prepared by manufacturer, signed and sealed by William D. Cook, P.E., bearing the Miami-Dade County Product Control Approval stamp with the Notice of Acceptance number and expiration date by the Miami-Dade County Product Control Division.

MISSILE IMPACT RATING: Large and Small Missile Impact

LABELING: Each unit shall bear a permanent label with the manufacturer's name or logo, city, state and following statement: "Miami-Dade County Product Control Approved", unless otherwise noted herein.

RENEWAL of this NOA shall be considered after a renewal application has been filed and there has been no change in the applicable building code negatively affecting the performance of this product.

TERMINATION of this NOA will occur after the expiration date or if there has been a revision or change in the materials, use, and/or manufacture of the product or process. Misuse of this NOA as an endorsement of any product, for sales, advertising or any other purposes shall automatically terminate this NOA. Failure to comply with any section of this NOA shall be cause for termination and removal of NOA.

ADVERTISEMENT: The NOA number preceded by the words Miami-Dade County, Florida, and followed by the expiration date may be displayed in advertising literature. If any portion of the NOA is displayed, then it shall be done in its entirety.

INSPECTION: A copy of this entire NOA shall be provided to the user by the manufacturer or its distributors and shall be available for inspection at the job site at the request of the Building Official.
This NOA consists of this page 1 and evidence page E-1, E-2, and E-3, as well as approval document mentioned above.
The submitted documentation was reviewed by **Herminio F. Gonzalez, P.E., Director, BCCO**

PRODUCT CONTROL ACCEPTED 8/4/05

Trainor Glass Company

NOTICE OF ACCEPTANCE: EVIDENCE SUBMITTED

A. DRAWINGS

1. Manufacturer's die drawings and sections.
2. Drawing No. **TCW250P-LMR,** titled "TCW-250P LMR Series", sheets 1 through 9 of 9, dated 08/23/04 with revision "1" on 07/21/05, and prepared by manufacturer, signed and sealed by William D. Cook, P.E.

B. TESTS

1. Test reports on 1) Air Infiltration Test, per FBC, TAS 202-94
   2) Uniform Static Air Pressure Test, Loading per FBC, TAS 202-94
   3) Water Resistance Test, per FBC, TAS 202-94
   4) Large Missile Impact Test per FBC, TAS 201-94
   5) Cyclic Wind Pressure Loading per FBC, TAS 203-94

   along with marked-up drawings and installation diagram of an aluminum window wall system, prepared by Hurricane Test Laboratory, LLC Test Report No. **HTL-0062-1020-03,** dated 10/24-27/03, signed and sealed by Vinu J. Abraham, P.E.
2. Test reports on 1) Air Infiltration Test, per FBC, TAS 202-94
   2) Uniform Static Air Pressure Test, Loading per FBC, TAS 202-94
   3) Water Resistance Test, per FBC, TAS 202-94
   4) Large Missile Impact Test per FBC, TAS 201-94
   5) Cyclic Wind Pressure Loading per FBC, TAS 203-94

   along with marked-up drawings and installation diagram of an aluminum window wall system, prepared by Hurricane Test Laboratory, LLC Test Report No. **HTL-0062-0302-04,** dated 02/23-4/07/04, signed and sealed by Vinu J. Abraham, P.E.
3. Test reports on 1) Large Missile Impact Test per FBC, TAS 201-94
   2) Cyclic Wind Pressure Loading per FBC, TAS 203-94

   along with marked-up drawings and installation diagram of an aluminum window wall system, prepared by Hurricane Test Laboratory, LLC Test Report No. **HTL-0062-0406-04,** dated 02/23-04/07/04, signed and sealed by Vinu J. Abraham, P.E.
4. Test reports on 1) Air Infiltration Test, per FBC, TAS 202-94
   2) Uniform Static Air Pressure Test, Loading per FBC, TAS 202-94
   3) Water Resistance Test, per FBC, TAS 202-94
   4) Large Missile Impact Test per FBC, TAS 201-94
   5) Cyclic Wind Pressure Loading per FBC, TAS 203-94

   along with marked-up drawings and installation diagram of an aluminum window wall system, prepared by Hurricane Test Laboratory, LLC Test Report No. **HTL-0062-0916-03,** dated 09/23-24/03, signed and sealed by Vinu J. Abraham, P.E.

Herminio F. Gonzalez, P.E.
Director, Building Code Compliance Office
NOA No 05-0624.03
Expiration Date: August 25, 2010
Approval Date: August 25, 2005

NOTICE OF ACCEPTANCE: EVIDENCE SUBMITTED

5. Test reports on 1) Air Infiltration Test, per FBC, TAS 202-94
   2) Uniform Static Air Pressure Test, Loading per FBC, TAS 202-94
   3) Water Resistance Test, per FBC, TAS 202-94
   4) Large Missile Impact Test per FBC, TAS 201-94
   5) Cyclic Wind Pressure Loading per FBC, TAS 203-94

   along with marked-up drawings and installation diagram of an aluminum window wall system, prepared by Hurricane Test Laboratory, LLC Test Report No. **HTL-0062-0916-03,** dated 11/10-12/05/03, signed and sealed by Vinu J. Abraham, P.E.
6. Test reports on 1) Air Infiltration Test, per FBC, TAS 202-94
   2) Uniform Static Air Pressure Test, Loading per FBC, TAS 202-94
   3) Water Resistance Test, per FBC, TAS 202-94
   4) Large Missile Impact Test per FBC, TAS 201-94
   5) Cyclic Wind Pressure Loading per FBC, TAS 203-94

   along with marked-up drawings and installation diagram of an aluminum window wall system, prepared by Hurricane Test Laboratory, LLC Test Report No. **HTL-0062-1113-03,** dated 02/23-4/07/04, signed and sealed by Vinu J. Abraham, P.E.
7. Test reports on 1) Air Infiltration Test, per FBC, TAS 202-94
   2) Uniform Static Air Pressure Test, Loading per FBC, TAS 202-94
   3) Water Resistance Test, per FBC, TAS 202-94
   4) Large Missile Impact Test per FBC, TAS 201-94
   5) Cyclic Wind Pressure Loading per FBC, TAS 203-94

   along with marked-up drawings and installation diagram of an aluminum window wall system, prepared by Hurricane Test Laboratory, LLC Test Report No. **HTL-0062-0512-04,** dated 03/18-5/11/04, signed and sealed by Vinu J. Abraham, P.E.

C. CALCULATIONS

1. Anchor Calculations, ASTM-E 1300, and structural analysis, dated 08/23/04, prepared by Bromley-Cook Engineering, signed and sealed by William D. Cook, P.E.

D. QUALITY ASSURANCE

1. Miami Dade Building Code Compliance Office (BCCO).

E. MATERIAL CERTIFICATIONS

1. Notice of Acceptance No. 01-1204.01 issued to "E.I. DuPont Denemours" for "DuPont Butacite ® PVB" dated 02/15/01, expiring on 12/11/05.

F. STATEMENTS

1. Statement letter of conformance, dated June 16, 2005, signed and sealed by William D. Cook, P.E.

Herminio F. Gonzalez, P.E.
Director, Building Code Compliance Office
NOA No 05-0624.03
Expiration Date: August 25, 2010
Approval Date: August 25, 2005

NOTICE OF ACCEPTANCE: EVIDENCE SUBMITTED

2. Statement letter of no financial interest, dated June 16, 2005, signed and sealed by William D. Cook, P.E.

G. OTHER

1. Letter from the consultant, dated July 29, 2005, stating that the product is in compliance with the Florida Building Code (FBC).

for M Hatch

Herminio F. Gonzalez, P.E.
Director, Building Code Compliance Office
NOA No 05-0624.03
Expiration Date: August 25, 2010
Approval Date: August 25, 2005

TCW–250P LMR SERIES WINDOW WALL SYSTEM
W/ REINFORCED MULLIONS
APPROVED FOR VERTICAL FACE COVERS OR BUTT JOINTS
LARGE MISSILE IMPACT

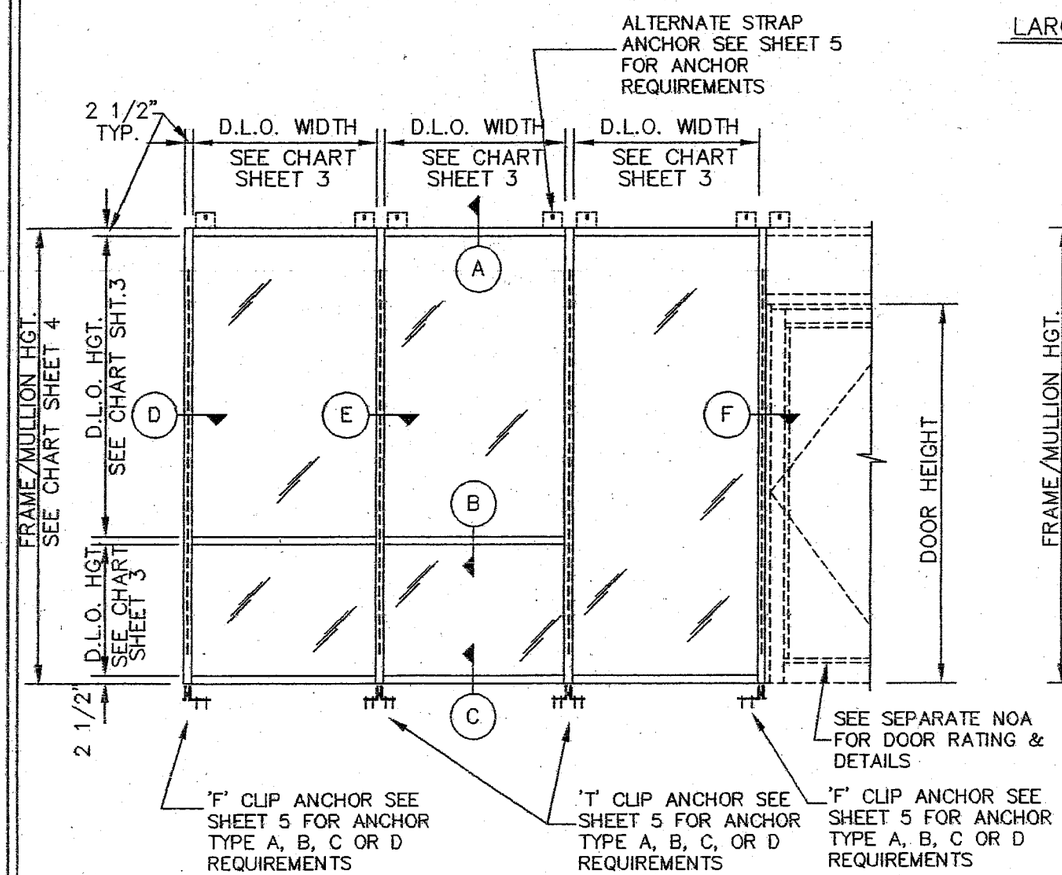

TYPICAL ELEVATION

MULTIPLE UNITS
W/ TGF–209 FACE COVER

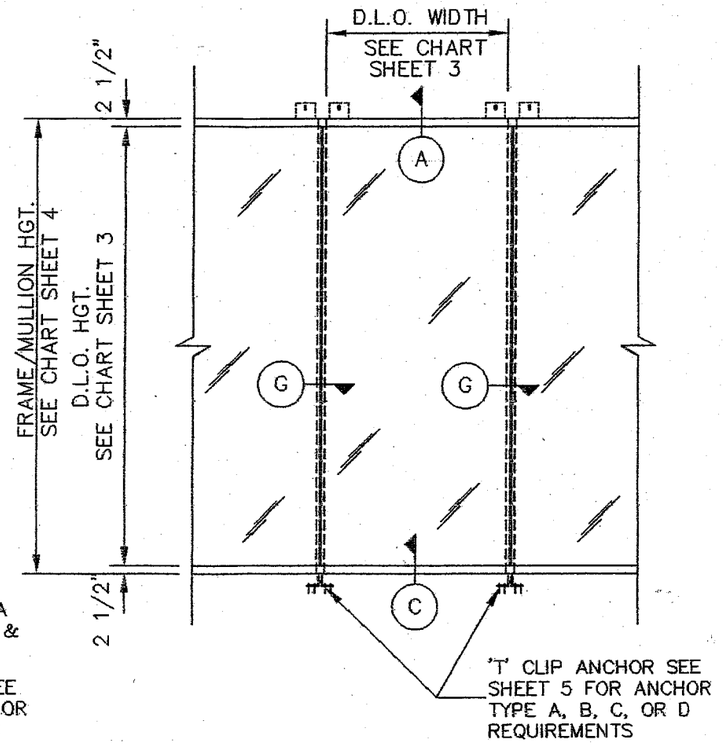

TYPICAL ELEVATION

W/ VERTICAL BUTT JOINTS
(STRUCTURALLY GLAZED OPTION)

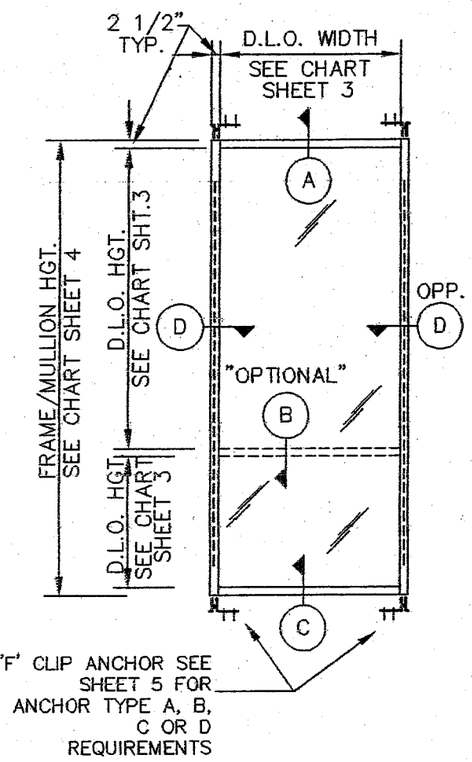

TYPICAL ELEVATION

SINGLE FIXED WINDOW
(PUNCHED OPENING)

NOTES:

1.)ALUMINUM WINDOW WALL SYSTEM IS RATED FOR LARGE MISSILE IMPACT. SHUTTERS ARE NOT REQUIRED.
2.)THIS SYSTEM MAY BE USED IN CONJUNCTION WITH APPROVED ENTRANCE DOORS.
3.)CODE REQUIREMENTS FOR SAFEGUARDS MUST BE OBSERVED.
4.)THIS PRODUCT IS DESIGNED TO COMPLY WITH THE FLORIDA BUILDING CODE INCLUDING THE HIGH VELOCITY HURRICANE ZONE.
5.)WOOD BUCKS BY OTHERS MUST BE ANCHORED PROPERLY TO TRANSFER LOADS TO THE STRUCTURE. BUCKS SHALL BE DESIGNED BY PROFESSIONAL ENGINEER OF RECORD
6.)ANCHORS SHALL BE AS LISTED IN CHARTS AND SPACED AS DETAILED.
7.)ANCHOR EMBEDMENT TO BASE MATERIAL SHALL BE BEYOND WALL DRESSING OR STUCCO.
8.)ALL STEEL IN CONTACT WITH ALUMINUM TO BE PAINTED OR PLATED.

INSTRUCTIONS:

STEP 1: DETERMINE DESIGN WIND LOAD REQUIREMENT BASED ON WIND VELOCITY, BLDG. HEIGHT, WIND ZONE. USING APPLICABLE ASCE 7 STANDARDS.

STEP 2: SEE CHARTS ON SHEET 3 FOR DESIGN LOAD CAPACITY OF DESIRED GLASS SIZE. MATCH GLASS SIZE AND DESIGN LOAD

STEP 3: CHECK MULLION CAPACITY FOR GIVEN SPACING AND HEIGHT USING CHARTS ON SHEET 4. THE CAPACITY SHOULD EQUAL OR EXCEED THE DESIGN LOAD.

STEP 4: USING CHARTS ON SHEET 5 SELECT ANCHOR OPTION WITH WITH DESIGN RATING EQUAL TO OR GREATER THAN DESIGN LOAD SPECIFIED IN STEP 1

Approved as complying with the Florida Building Code
Date 08/23/05
NOA# 05-0624.03
Miami-Dade Product Control Division
By

BROMLEY COOK ENGINEERING, INC.
STRUCTURAL ENGINEERING SERVICES
5440 N.W. 33RD AVENUE SUITE 100
FORT LAUDERDALE, FLORIDA 33309
TEL: (954) 772–4624 FAX: (954) 772–4634

JUL 26 2005

WILLIAM D. COOK P.E.
FLA P.E. # 43904
FLA S.I. # 2008

GLASS COMPANY
1101 13th STREET WEST, RIVIERA BEACH, FL 33404
PH. (561) 863–7078 FAX (561) 863–7088
www.trainorglass.com
ATLANTA, GA. CHICAGO, IL. DENVER, CO. ORLANDO, FL. NEWARK, NJ.

TRAINOR

NO.	DATE	BY	REVISIONS
1	7/21/05	M.O.	GENERAL REVISIONS PER B.C.C.O. COMMENTS

PROJECT NAME: TCW–250P LMR SERIES

LARGE MISSILE IMPACT W/ REINFORCED MULLIONS

DRAWING NUMBER: TCW250P–LMR
SHEET NO. 1 of 9

DATE: 08/23/04
SCALE: N.T.S.
DRAWN:
CHECKED BY:

GLASS SCHEDULE

TYPE	NOMINAL THCKNSS	DESCRIPTION		MISSILE TYPE
G-1	9/16"	LAMINATED GLASS (VISION OR SPANDREL)	1/4" HS OUTBOARD 0.100" SOLUTIA H.P. INTERLAYER 1/4" HS INBOARD	LARGE
G-2	9/16"	LAMINATED "VANCEVA STORM"	1/4" HS OUTBOARD 0.075" VANCEVA STORM INTERLAYER 1/4" HS INBOARD	LARGE
G-3	5/8"	LAMINATED "HRG-2"	1/4" HS OUTBOARD/0.050" URETHANE/0.080" POLYCARB 0.050" URETHANE/1/4" HS INBOARD	LARGE
G-4	9/16"	LAMINATED "SENTRYGLAS PLUS"	1/4" HS OUTBOARD 0.090" S.G.P. INTERLAYER 1/4" HS INBOARD	LARGE
G-5	1 3/8"	INSULATED "HRG-2"	1/4" HS OUTBOARD / 1/2" AIRSPACE 1/4" HS/0.050" URETHANE/0.080" POLYCARB/0.050" URETHANE 1/4" HS INBOARD	LARGE
G-6	1 5/16"	INSULATED LAMINATED GLASS (VISION OR SPANDREL)	1/4" HS OUTBOARD / 1/2" AIRSPACE 1/4" HS/0.100" SOLUTIA HP INTERLAYER/ 1/4" HS INBOARD	LARGE

OPTIONAL: 6mm THK. COMPOSITE ALUMINUM PANEL IN LIEU OF GLAZING (COMPSITION: .030" ALUM. SHEET – 3/16" PLYWOOD – .030" ALUM. SHEET)

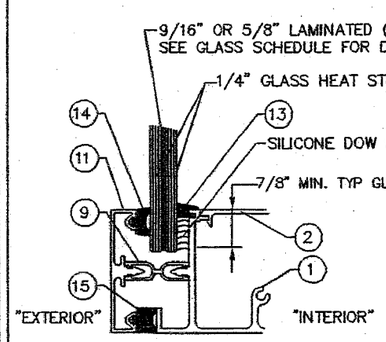

NON INSULATED

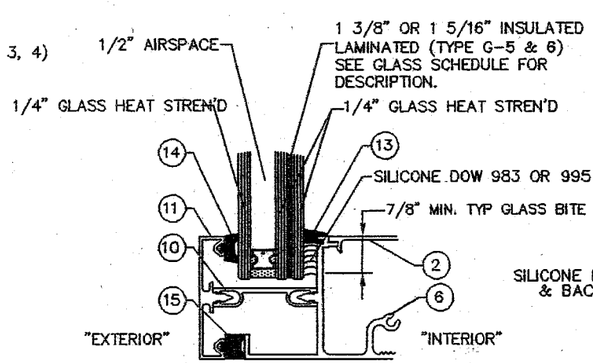

INSULATED

GLAZING DETAILS

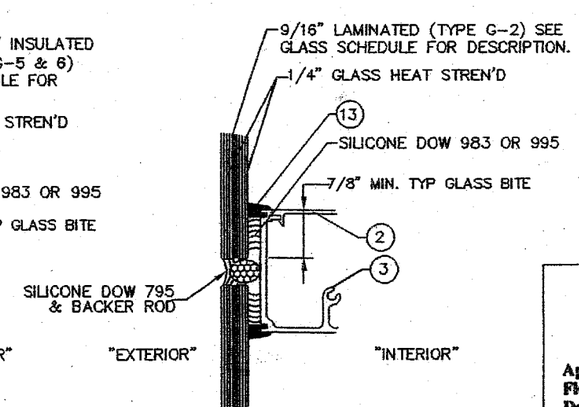

STRUCTURAL GLAZED

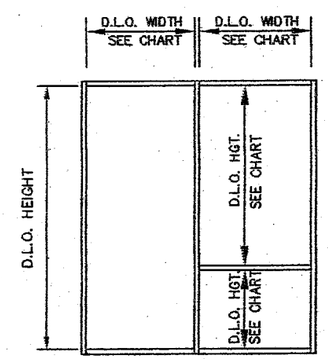

Approved as complying with the Florida Building Code
Date 08/25/05
NOA# 05-0624.03
Miami-Dade Product Control Division
By

BROMLEY COOK ENGINEERING, INC.
STRUCTURAL ENGINEERING SERVICES
5440 N.W. 33RD AVENUE SUITE 100
FORT LAUDERDALE, FLORIDA 33309
TEL: (954) 772-4624 FAX: (954) 772-4634

JUL 2 6 2005

WILLIAM D. COOK P.E.
FLA P.E. # 43904
FLA S.I. # 2008

TRAINOR GLASS COMPANY
1101 13th STREET WEST, RIVIERA BEACH, FL 33404
PH. (561) 863-7078 FAX (561) 863-7086
www.trainorglass.com
ATLANTA,GA. CHICAGO,IL. DENVER,CO. ORLANDO, FL. NEWARK, N.J.

REVISIONS

NO.	DATE	BY	
1	7/21/05	M.G.	GENERAL REVISIONS PER B.C.C.O. COMMENTS
2			
3			
4			
5			

PROJECT NAME: TCW-250P LMR SERIES

LARGE MISSILE IMPACT W/ REINFORCED MULLIONS

DRAWING NUMBER: TCW250P-LMR

SHEET NO. 2 OF 9

DATE: 08/23/04
SCALE: N.T.S.
DRAWN:
CHECKED BY:

GLASS LOAD CAPACITY – P.S.F.

NOMINAL DIM'S.		LAMINATED GLASS GLASS TYPE: G1, G4		LAMINATED GLASS (STRUCTURALLY GLAZED) GLASS TYPE: G2		LAMINATED GLASS GLASS TYPE: G3		LAMINATED–INSULATED GLASS TYPE: G5		LAMINATED–INSULATED GLASS TYPE: G6	
D.L.O. WIDTH	D.L.O. HEIGHT	EXT. (+)	EXT. (–)	EXT. (+)	EXT. (–)	EXT. (+)	EXT. (–)	EXT. (+)	EXT. (–)	EXT. (+)	EXT. (–)
42"	81"	80	110	80	102	80	90	80	95	80	110
45"		80	110	80	102	80	90				
48"		80	110	80	102	80	90				
51"		80	110	80	102	80	90				
54"		80	110	80	102	80	90				
57"		80	110	80	102	80	90				
60"		80	110	80	100	80	90				
63"		80	109	80	98	80	90				
66"		80	107	80	95	80	90				
42"	84"	80	110	80	102	80	90				
45"		80	110	80	102	80	90				
48"		80	110	80	102	80	90				
51"		80	110	80	102	80	90				
54"		80	110	80	102	80	90				
57"		80	107	80	102	80	90				
60"		80	105	80	100	80	90				
64"		80	102	80	96	80	90				
42"	87"	80	110	80	102	80	90				
45"		80	110	80	102	80	90				
48"		80	110	80	102	80	90				
51"		80	110	80	102	80	90				
54"		80	105	80	102	80	90				
57"		80	102	80	102	80	90				
60"		80	99	80	100	80	90				
62"		80	98	80	98	80	90				
39"	90"	80	110	80	102	80	90				
42"		80	110	80	102	80	90				
45"		80	110	80	102	80	90				
48"		80	107	80	102	80	90				
51"		80	103	80	102	80	90				
54"		80	100	80	102	80	90				
57"		80	97	80	102	80	90				
60"		80	94	80	100	80	90				
36"	93"	80	110	80	102	80	90				
39"		80	110	80	102	80	90				
42"		80	110	80	102	80	90				
45"		80	107	80	102	80	90				
48"		80	102	80	102	80	90				
51"		80	98	80	102	80	90				
54"		80	95	80	102	80	90				
58"		80	91	80	102	80	90				

GLASS LOAD CAPACITY – P.S.F.

NOMINAL DIM'S.		LAMINATED GLASS GLASS TYPE: G1, G4		LAMINATED GLASS (STRUCTURALLY GLAZED) GLASS TYPE: G2		LAMINATED GLASS GLASS TYPE: G3		LAMINATED–INSULATED GLASS TYPE: G5		LAMINATED–INSULATED GLASS TYPE: G6	
D.L.O. WIDTH	D.L.O. HEIGHT	EXT. (+)	EXT. (–)	EXT. (+)	EXT. (–)	EXT. (+)	EXT. (–)	EXT. (+)	EXT. (–)	EXT. (+)	EXT. (–)
39"	95"	80	110	80	102	80	90	80	95	80	110
42"		80	109	80	102	80	90				
45"		80	104	80	102	80	90				
48"		80	99	80	102	80	90				
51"		80	96	80	102	80	90				
54"		80	92	80	102	80	90				
56"		80	90	80	102	80	90				
36"	99"	80	110	80	102	80	90				
39"		80	109	80	102	80	90				
42"		80	103	80	102	80	90				
45"		80	98	80	102	80	90				
48"		80	94	80	102	80	90				
51"		80	90	80	102	80	90				
54"		80	90	80	102	80	90				
36"	102"	80	110	80	102	80	90				
39"		80	105	80	102	80	90				
42"		80	100	80	102	80	90				
45"		80	95	80	102	80	90				
48"		80	90	80	102	80	90				
51"		80	90	80	102	80	90				
53"		80	90	80	102	80	90				
36"	105"	80	108	80	102	80	90				
39"		80	102	80	102	80	90				
42"		80	96	80	102	80	90				
45"		80	91	80	102	80	90				
48"		80	90	80	102	80	90				
51"		80	90	80	102	80	90				
36"	108"	80	105	80	102	80	90				
39"		80	98	80	102	80	90				
42"		80	93	80	102	80	90				
45"		80	90	80	102	80	90				
48"		80	90	80	102	80	90				
50"		80	90	80	102	80	90				
36"	111"	80	101	80	102	80	90				
39"		80	95	80	102	80	90				
42"		80	90	80	102	80	90				
45"		80	90	80	102	80	90				
48"		80	90	80	102	80	90				
36"	114"	80	98	80	102	80	90				
39"		80	92	80	102	80	90				
42"		80	90	80	102	80	90				
45"		80	90	80	102	80	90				
47"		80	90	80	102	80	90				

Approved as complying with the Florida Building Code
Date 08/25/05
NOA# 05-0624.03
Miami Dade Product Control Division
By

BROMLEY COOK ENGINEERING, INC.
STRUCTURAL ENGINEERING SERVICES
5440 N.W. 33RD AVENUE SUITE 100
FORT LAUDERDALE, FLORIDA 33309
TEL: (954) 772-4624 FAX: (954) 772-4634

JUL 26 2005

WILLIAM D. COOK P.E.
FLA P.E. # 43904
FLA S.I. # 2008

TRAINOR GLASS COMPANY
1101 13th STREET WEST, RIVIERA BEACH, FL 33404
PH. (561) 863-7078 FAX (561) 863-7088
www.trainorglass.com
ATLANTA,GA. CHICAGO,IL. DENVER,CO. ORLANDO, FL. NEWARK, N.J.

REVISIONS

NO.	DATE	BY

PROJECT NAME: TCW-250P LMR SERIES

LARGE MISSILE IMPACT W/ REINFORCED MULLIONS

DRAWING NUMBER: TCW250P-LMR
SHEET NO. 3 OF 9

DATE: 08/23/04
SCALE: N.T.S.
DRAWN:
CHECKED BY:

JAMB & MULLION LOAD CAPACITY – P.S.F.
(REINFORCED MULLIONS)

NOMINAL DIM'S.		INTERMEDIATE MULLION JAMB/DOOR MULLION	
WIDTH (W)	MULLION HGT.	EXT. (+)	EXT. (–)
49"	108"	80	110
55"			
61"			
67"			
73"			
74"			
79"			
45"	114"		
51"			
57"			
63"			
69"			
75"			
35"	120"		
41"			
47"			
53"			
59"			
65"			
71"			
32"	126"		
38"			
44"			
50"			
56"			
62"			
68"		80	110

JAMB & MULLION LOAD CAPACITY – P.S.F.
(REINFORCED MULLIONS)

NOMINAL DIM'S.		INTERMEDIATE MULLION JAMB/DOOR MULLION	
WIDTH (W)	MULLION HGT.	EXT. (+)	EXT. (–)
35"	132"	80	110
41"			
47"			
53"			
59"			
65"			
32"	138"		
38"			
44"			
50"			
56"			
62"			
30"	143"		
36"			
42"			
48"			
54"			
60"		80	110

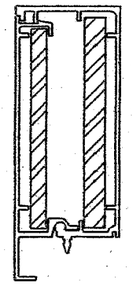

FRAME JAMB
REINFORCING: 1/2" X 5" &
3/8" X 4 3/4" STEEL BAR

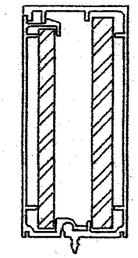

INTERMEDIATE MULLION
REINFORCING: 1/2" X 5" &
3/8" X 4 3/4" STEEL BAR

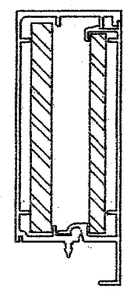

DOOR JAMB @ MULLION
REINFORCING: 1/2" X 5" &
3/8" X 4 3/4" STEEL BAR

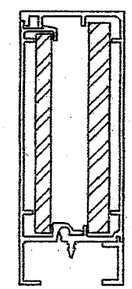

DOOR JAMB @ WALL
REINFORCING: 1/2" X 5" &
3/8" X 4 3/4" STEEL BAR

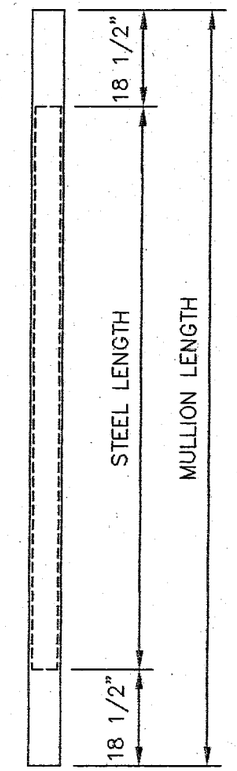

STEEL REINFORCING DIAGRAM
STEEL LENGTH = MULLION LENGTH –37"
CENTER REINFORCING IN SPAN

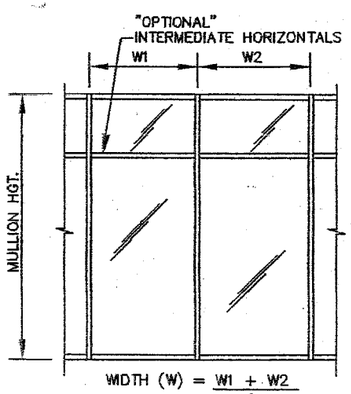

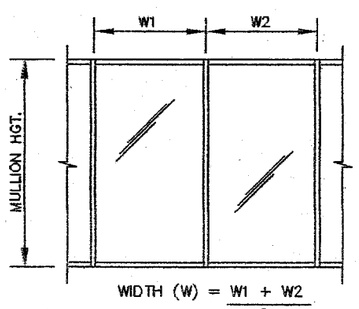

Approved as complying with the Florida Building Code
Date 08/25/05
NOA# 05-0624.03
Miami Dade Product Control Division
By

BROMLEY COOK ENGINEERING, INC.
STRUCTURAL ENGINEERING SERVICES
5440 N.W. 33RD AVENUE SUITE 100
FORT LAUDERDALE, FLORIDA 33309
TEL: (954) 772-4624 FAX: (954) 772-4634

JUL 26 2005

WILLIAM D. COOK P.E.
FLA P.E. # 43904
FLA S.I. # 2008

TRAINOR GLASS COMPANY
1101 13th STREET WEST, RIVIERA BEACH, FL 33404
PH. (561) 863-7078 FAX (561) 863-7088
www.trainorglass.com
ATLANTA,GA. CHICAGO,IL. DENVER,CO. ORLANDO, FL. NEWARK, NJ.

REVISIONS

NO.	DATE	BY

PROJECT NAME: TCW-250P LMR SERIES

LARGE MISSILE IMPACT W/ REINFORCED MULLIONS

DRAWING NUMBER: TCW250P-LMR

SHEET NO. 4 OF 9

DATE: 08/23/04
SCALE: N.T.S.
DRAWN:
CHECKED BY:

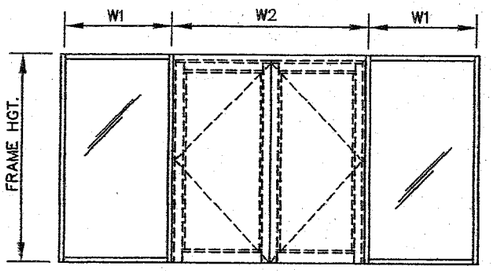

WIDTH (W) = $\frac{W1}{2} + \frac{W2}{4}$ (MULLION)

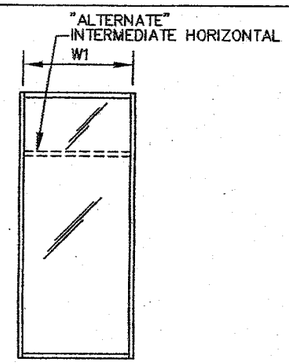

WIDTH (W) = W1
@ JAMB

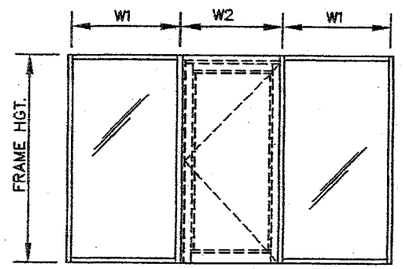

WIDTH (W) = $\frac{W1 + W2}{2}$ (MULLION)

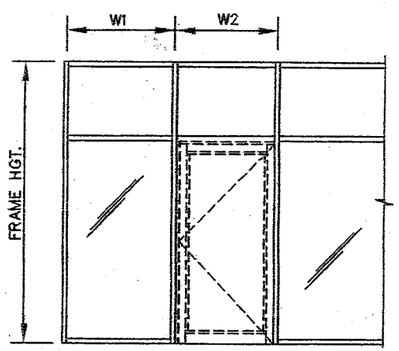

WIDTH (W) = $\frac{W1 + W2}{2}$ (MULLION)

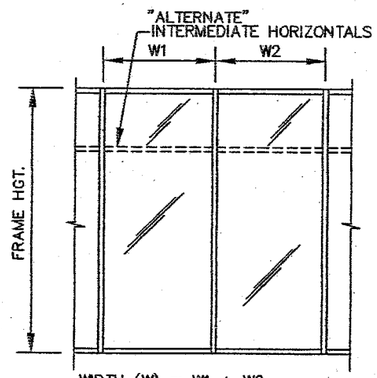

WIDTH (W) = $\frac{W1 + W2}{2}$ (MULLION)

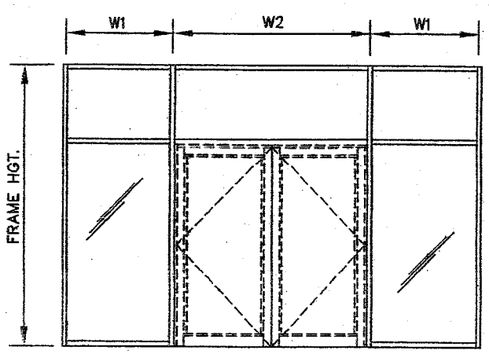

WIDTH (W) = $\frac{W1 + W2}{2}$ (MULLION)

FRAME ANCHOR LOAD CAPACITY – P.S.F. Pmax (+) & (–)				
NOMINAL DIM'S.		ANCHOR TYPES		
WIDTH (W)	MULLION HGT.	A6	B2	C2
49"	108"	110	110	110
55"		110	110	99
61"		110	110	89
67"		110	101	81
73"		105	93	74
79"		97	86	69
45"	114"	110	110	110
51"		110	110	101
57"		110	110	90
63"		110	101	82
69"		105	93	75
75"		96	86	69
35"	120"	110	110	110
41"		110	110	110
47"		110	110	110
53"		110	110	110
59"		110	103	110
65"		106	94	103
71"		97	86	94
32"	126"	110	110	110
38"		110	110	110
44"		110	110	106
50"		110	110	93
56"		110	104	83
62"		106	94	75
68"		96	85	69

FRAME ANCHOR LOAD CAPACITY – P.S.F. Pmax (+) & (–)				
NOMINAL DIM'S.		ANCHOR TYPES		
WIDTH (W)	MULLION HGT.	A6	B2	C2
35"	132"	110	110	110
41"		110	110	109
47"		110	110	95
53"		110	104	84
59"		106	94	75
65"		96	85	69
32"	138"	110	110	110
38"		110	110	110
44"		110	110	97
50"		110	106	85
56"		106	95	76
62"		96	86	69
30"	143"	110	110	110
36"		110	110	110
42"		110	110	97
48"		110	104	85
54"		106	94	76
60"		95	85	68

ANCHORAGE NOTES: SEE BELOW FOR TYPES/DESCRIPTIONS

A6 = (6) ANCHORS TYPE 'A' AT EACH MULLION INTO TGF–14 "T" ANCHOR CLIP. (3) AT EA. JAMB INTO TGF–13 "F" ANCHOR CLIP

B2 = (2) ANCHORS TYPE 'B' AT EACH MULLION INTO TGF–14 "T" ANCHOR CLIP. (2) AT EA. JAMB INTO TGF–13 "F" ANCHOR CLIP

ALTERNATE ANCHORAGE:
B1 = (1) ANCHOR TYPE 'B' INTO EACH STRAP ANCHOR
(2) STRAP ANCHORS PER MULLION END (1. EA. SIDE OF MULLION)
(1) STRAP ANCHOR PER JAMB END

ANCHOR TYPE SCHEDULE	
SUBSTRATE:	ANCHOR TYPE:
METAL	TYPE 'A' – #14 S.M.S. OR 1/4" SELF DRILLING SCREWS INTO METAL STRUCTURES (A36 STEEL OR 1/8" TH. ALUM.)
CONCRETE	TYPE 'B' – 3/8" POWERS WEDGE BOLTS DIRECTLY INTO CONC. OR GROUT FILLED MASONRY. 2 1/2" MIN. EMBED MIN. EDGE DISTANCE: 3 3/4" MIN. C/C SPACING: 4 1/2"

Approved as complying with the Florida Building Code
Date 08/25/05
NOA# 05-0624.03
Miami-Dade Product Control Division
By

BROMLEY COOK ENGINEERING, INC.
STRUCTURAL ENGINEERING SERVICES
5440 N.W. 33RD AVENUE SUITE 100
FORT LAUDERDALE, FLORIDA 33309
TEL: (954) 772–4624 FAX: (954) 772–4634

JUL 26 2005

WILLIAM D. COOK P.E.
FLA P.E. # 43904
FLA S.I. # 2008

TRAINOR GLASS COMPANY
1101 13th STREET WEST, RIVIERA BEACH, FL 33404
PH. (561) 863–7078 FAX (561) 863–7088
www.trainorglass.com
ATLANTA,GA. CHICAGO,IL. DENVER,CO. ORLANDO, FL. NEWARK, NJ.

NO.	DATE	BY	REVISIONS

PROJECT NAME: TCW–250P LMR SERIES

LARGE MISSILE IMPACT W/ REINFORCED MULLIONS

DRAWING NUMBER: TCW250P–LMR
SHEET NO. 5 OF 9

DATE: 08/23/04
SCALE: N.T.S.
DRAWN:
CHECKED BY:

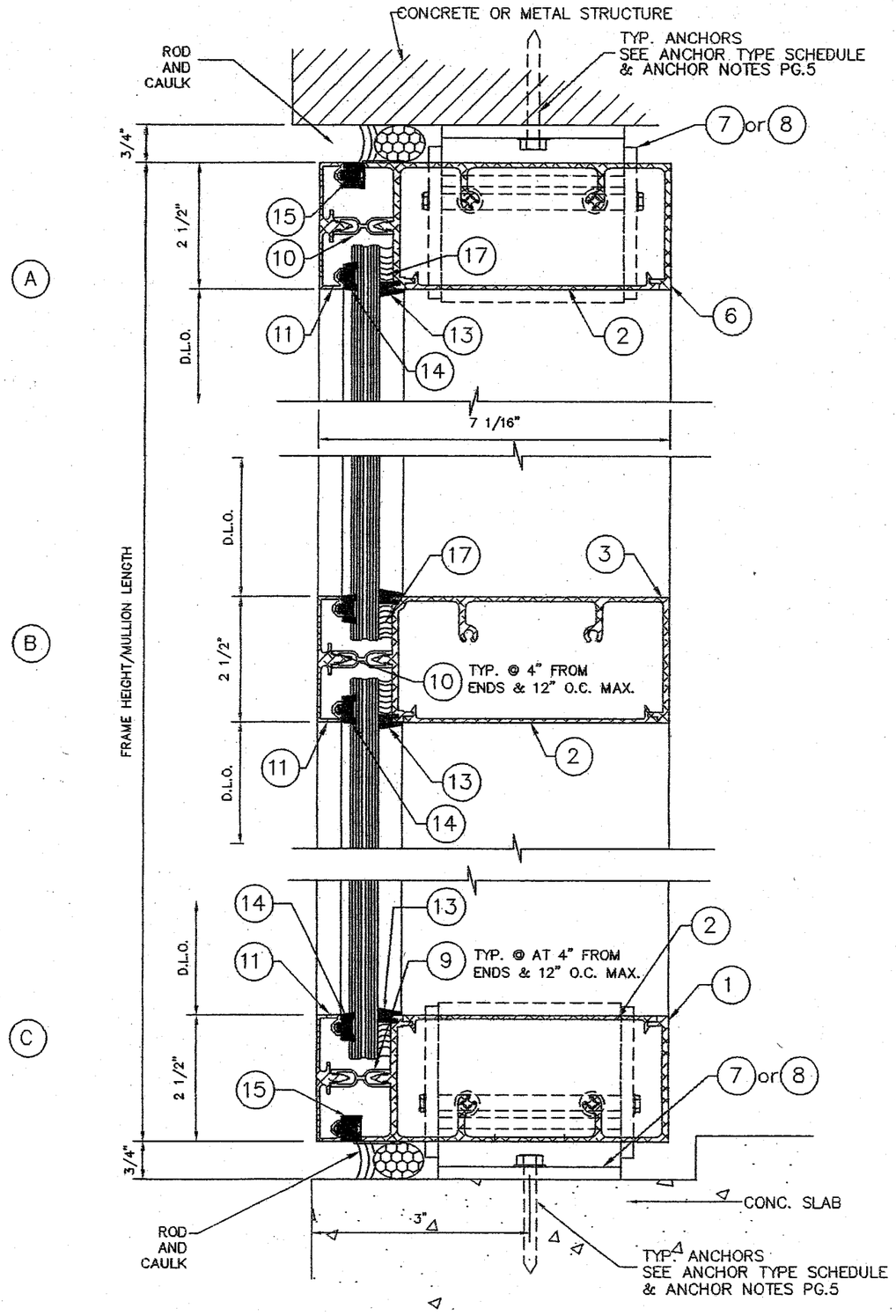

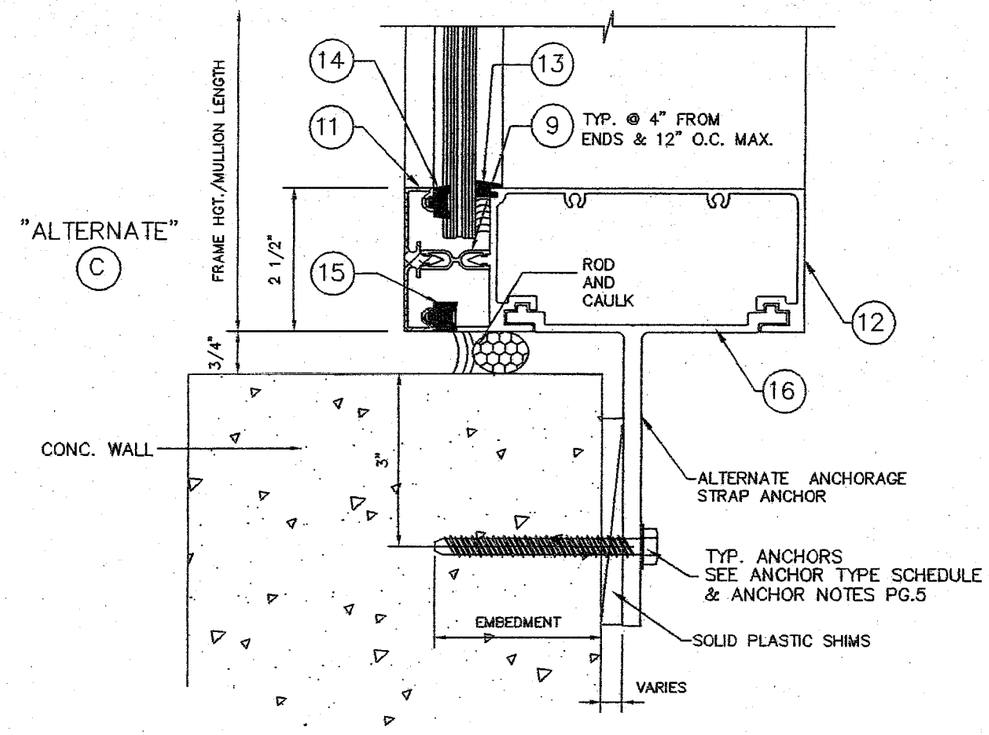

SEALANT NOTES:

GLAZING BEAD AT FRAME SEALED TO GLASS WITH DOW CORNING 983/995

FRAME PERIMETER TO STRUCTURE SEALED WITH DOW CORNING 795

Approved as complying with the Florida Building Code
Date 08/23/05
NOA# 05-0624.03
Miami-Dade Product Control Division
By

BROMLEY COOK ENGINEERING, INC.
STRUCTURAL ENGINEERING SERVICES
5440 N.W. 33RD AVENUE SUITE 100
FORT LAUDERDALE, FLORIDA 33309
TEL: (954) 772-4624 FAX: (954) 772-4634

JUL 2 6 2005

WILLIAM D. COOK P.E.
FLA P.E. # 43904
FLA S.I. # 2008

TRAINOR GLASS COMPANY
1101 13th STREET WEST, RIVIERA BEACH, FL 33404
PH. (561) 863-7078 FAX (561) 863-7088
www.trainorglass.com
ATLANTA, GA. CHICAGO, IL. DENVER, CO. ORLANDO, FL. NEWARK, N.J.

NO.	DATE	BY	REVISIONS

PROJECT NAME: TCW-250P LMR SERIES
LARGE MISSILE IMPACT W/ REINFORCED MULLIONS

DRAWING NUMBER: TCW250P-LMR
SHEET NO. 6 of 9

DATE: 08/23/04
SCALE: N.T.S.
DRAWN:
CHECKED BY:

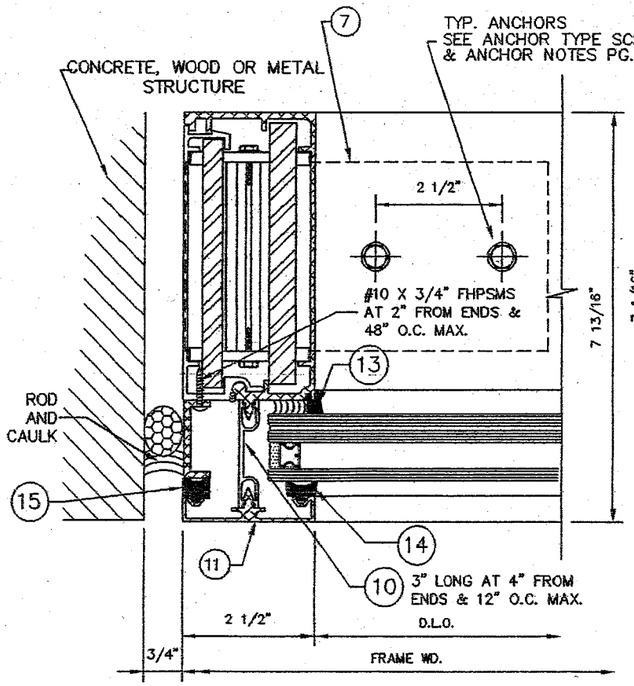

D JAMB

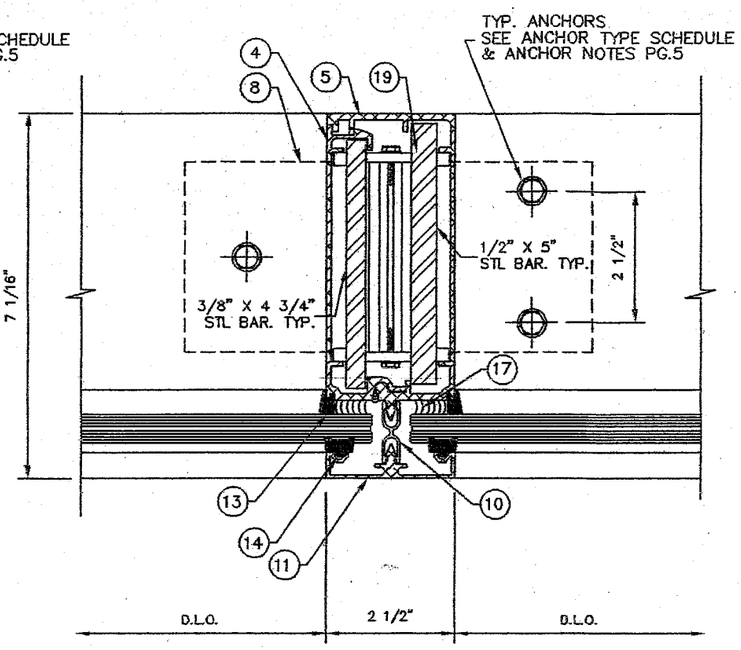

E MULLION

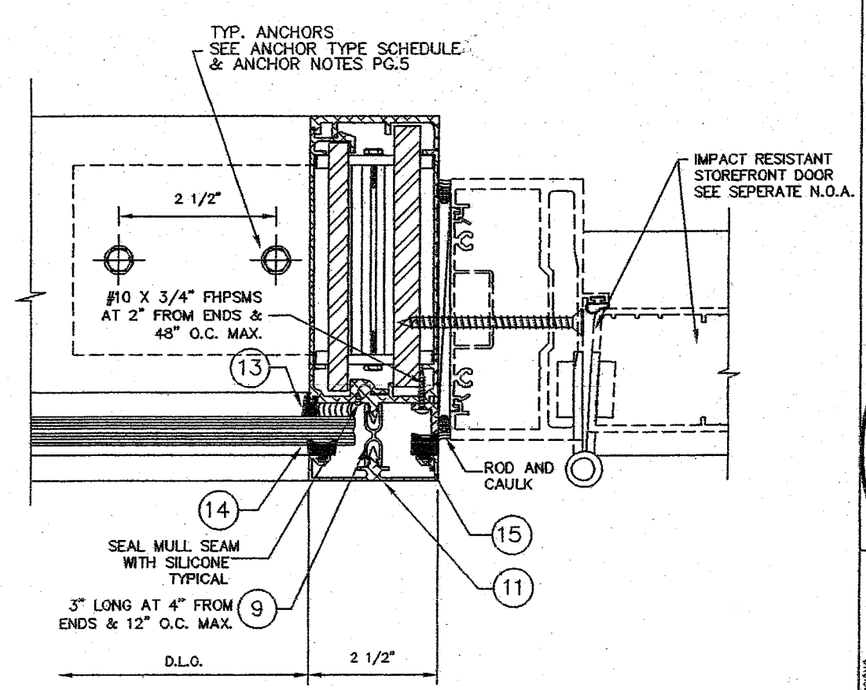

F MULLION AT DOOR JAMB

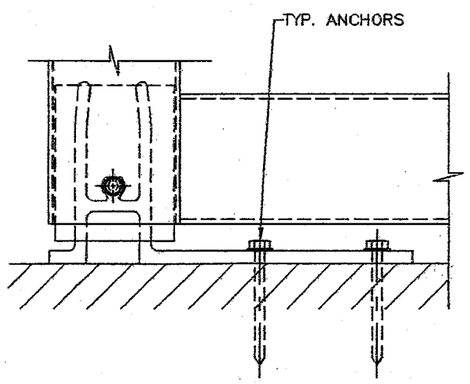

H "F" ANCHOR CLIP TGF-13 FRONT VIEW

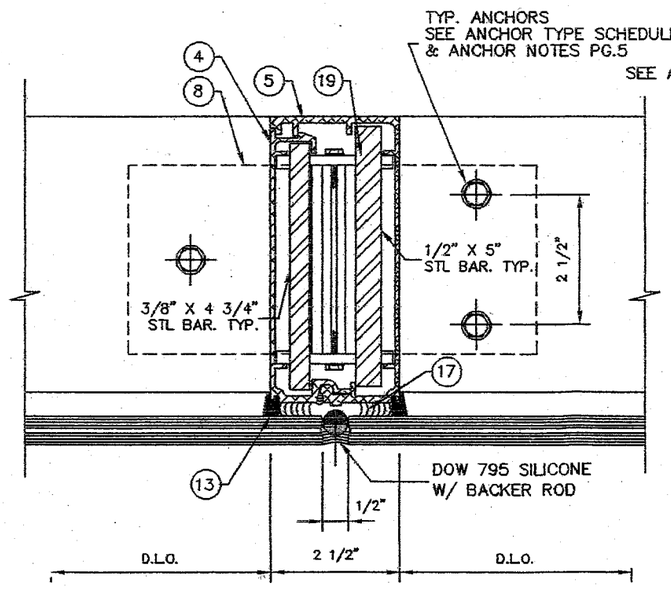

G BUTT JOINT MULLION STRUCTURAL GLAZED

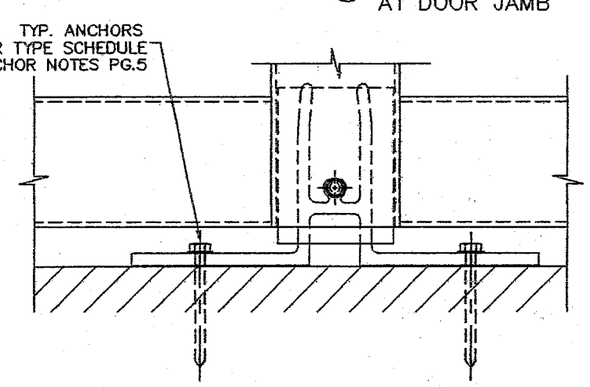

J "T" ANCHOR CLIP TGF-14 FRONT VIEW

Approved as complying with the Florida Building Code
Date 08/25/05
NOAE 05-0624.03
Miami-Dade Product Control Division
By

BROMLEY COOK ENGINEERING, INC.
STRUCTURAL ENGINEERING SERVICES
5440 N.W. 33RD AVENUE SUITE 100
FORT LAUDERDALE, FLORIDA 33309
TEL: (954) 772-4624 FAX: (954) 772-4634

JUL 2 6 2009

WILLIAM D. COOK P.E.
FLA P.E. # 43904
FLA S.I. # 2008

TRAINOR GLASS COMPANY
1101 13th STREET WEST, RIVIERA BEACH, FL 33404
PH. (561) 863-7078 FAX (561) 863-7088
www.trainorglass.com
ATLANTA,GA. CHICAGO,IL. DENVER,CO. ORLANDO, FL. NEWARK, N.J.

NO.	DATE	BY	REVISIONS

PROJECT NAME: TCW-250P LMR SERIES

LARGE MISSILE IMPACT W/ REINFORCED MULLIONS

DRAWING NUMBER: TCW250P-LMR

SHEET NO. 7 of 9

DATE: 08/23/04
SCALE: N.T.S.
DRAWN:
CHECKED BY:

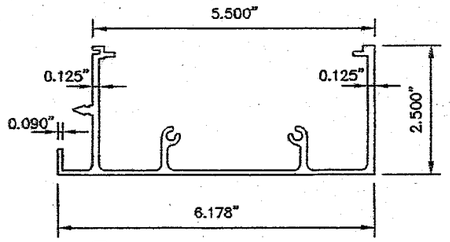

(1) FRAME – HEAD/SILL TGF–212

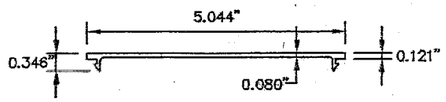

(2) FILLER TGF–17

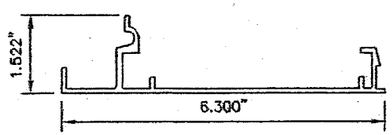

(22) JAMB TGF–110

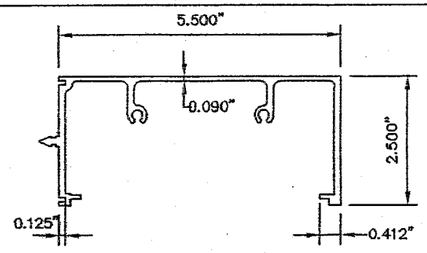

(3) INTERMEDIATE TGF–23

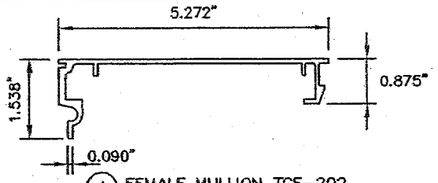

(4) FEMALE MULLION TGF–202

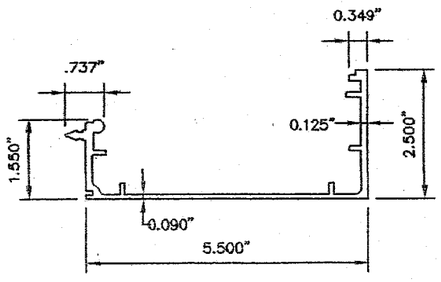

(5) MALE MULLION TGF–201

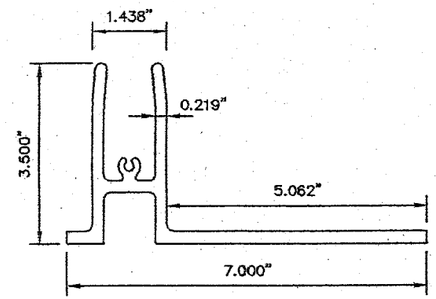

(7) ANCHOR "F" TGF–13

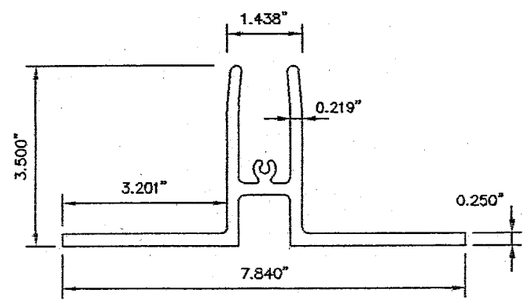

(8) ANCHOR "T" TGF–14

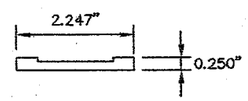

(19) END PLATE TGF–104

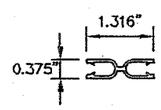

(9) COVER CLIP TGF–101

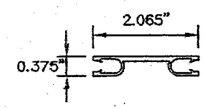

(10) COVER CLIP TGF–102

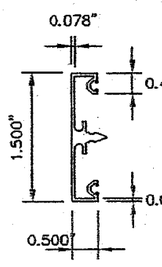

(11) COVER TGF–209

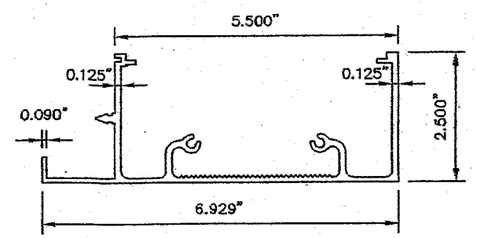

(6) FRAME – HEAD/SILL TGF–207

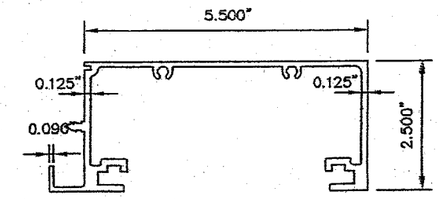

(12) FRAME HEAD/SILL TGF–86

ITEM #	PART NUMBER	QUANTITY	DESCRIPTION	MATERIAL	MANF./SUPPLIER/REMARKS
1	TGF-212	AS REQ'D	FRAME HEAD/SILL	ALUM. 6063-T5	TRAINOR GLASS CO.
2	TGF-17	AS REQ'D	FILLER	ALUM. 6063-T5	TRAINOR GLASS CO.
3	TGF-23	AS REQ'D	INTERMEDIATE HORT.	ALUM. 6063-T5	TRAINOR GLASS CO.
4	TGF-202	AS REQ'D	FEMALE MULLION	ALUM. 6063-T6	TRAINOR GLASS CO.
5	TGF-201	AS REQ'D	MALE MULLION	ALUM. 6063-T6	TRAINOR GLASS CO.
6	TGF-207	AS REQ'D	FRAME HEAD/SILL	ALUM. 6063-T5	TRAINOR GLASS CO.
7	TGF-13	1/JAMB	"F" ANCHOR AT JAMBS	ALUM. 6063-T5	TRAINOR GLASS CO.
8	TGF-14	1/MULLION	"T" ANCHOR AT MULLIONS	ALUM. 6063-T5	TRAINOR GLASS CO.
9	TGF-101	AS REQ'D	COVER CLIP	ALUM. 6063-T5	TRAINOR GLASS CO.
10	TGF-102	AS REQ'D	COVER CLIP	ALUM. 6063-T5	TRAINOR GLASS CO.
11	TGF-209	AS REQ'D	COVER	ALUM. 6063-T5	TRAINOR GLASS CO.
12	TGF-86	AS REQ'D	FRAME HEAD/SILL/JAMB	ALUM. 6063-T6	TRAINOR GLASS CO.
13	TR-5796	AS REQ'D	BLOW-OUT GASKET	VINYL	TREMCO- SILICONE COMPAT.
14	TR-6049	AS REQ'D	GLAZING GASKET	NEOPRENE	TREMCO
15	TR-6050	AS REQ'D	GLAZING GASKET	NEOPRENE	TREMCO
16	TGF-22,54,87,213,214	AS REQ'D	"STRAP" ANCHORS	ALUM. 6063-T5	TRAINOR GLASS CO.
17	983/995	AS REQ'D	GLAZING COMPOUND	SILICONE	DOW CORNING
18	TGF-203	AS REQ'D	FRAME HEAD/SILL/JAMB	ALUM. 6063-T6	TRAINOR GLASS CO.
19	TGF-104	2/"T" or "F"	END PLATE	ALUM. 6063-T5	TRAINOR GLASS CO.
20	-	AS REQ'D	CHANNEL 1/2" X 1 1/2"	ALUM. 6063-T5	TRAINOR GLASS CO. 1/8" THK.
21	TGF-15	AS REQ'D	SHEAR BLOCK	ALUM. 6063-T5	TRAINOR GLASS CO.
22	TGF-110	AS REQ'D	JAMB MEMBER	ALUM. 6063-T6	TRAINOR GLASS CO.

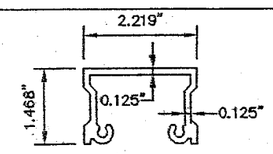

(21) SHEAR BLOCK TGF–15

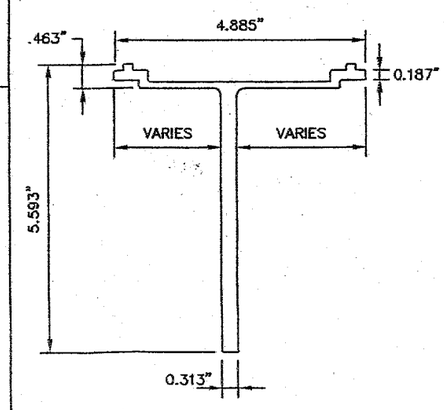

(16) "STRAP" ANCHOR TGF–22, 54, 87, 213, 214

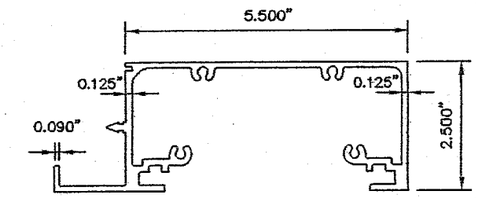

(18) FRAME HEAD/SILL/JAMB TGF–203

Approved as complying with the Florida Building Code
Date 08/25/05
NOA# 05-0624.03
Miami-Dade Product Control Division
By

BROMLEY COOK ENGINEERING, INC.
STRUCTURAL ENGINEERING SERVICES
5440 N.W. 33RD AVENUE SUITE 100
FORT LAUDERDALE, FLORIDA 33309
TEL: (954) 772-4624 FAX: (954) 772-4634

JUL 26 2005

WILLIAM D. COOK P.E.
FLA P.E. # 43904
FLA S.I. # 2008

TRAINOR GLASS COMPANY
1101 13th STREET WEST, RIVIERA BEACH, FL 33404
PH. (561) 863-7076 FAX (561) 863-7088
www.trainorglass.com
ATLANTA,GA. CHICAGO,IL. DENVER,CO. ORLANDO, FL. NEWARK, NJ.

REVISIONS

NO.	DATE	BY

PROJECT NAME: TCW–250P LMR SERIES

LARGE MISSILE IMPACT W/ REINFORCED MULLIONS

DRAWING NUMBER: TCW250P–LMR

SHEET NO. 8 OF 9

DATE: 08/23/04
SCALE: N.T.S.
DRAWN:
CHECKED BY:

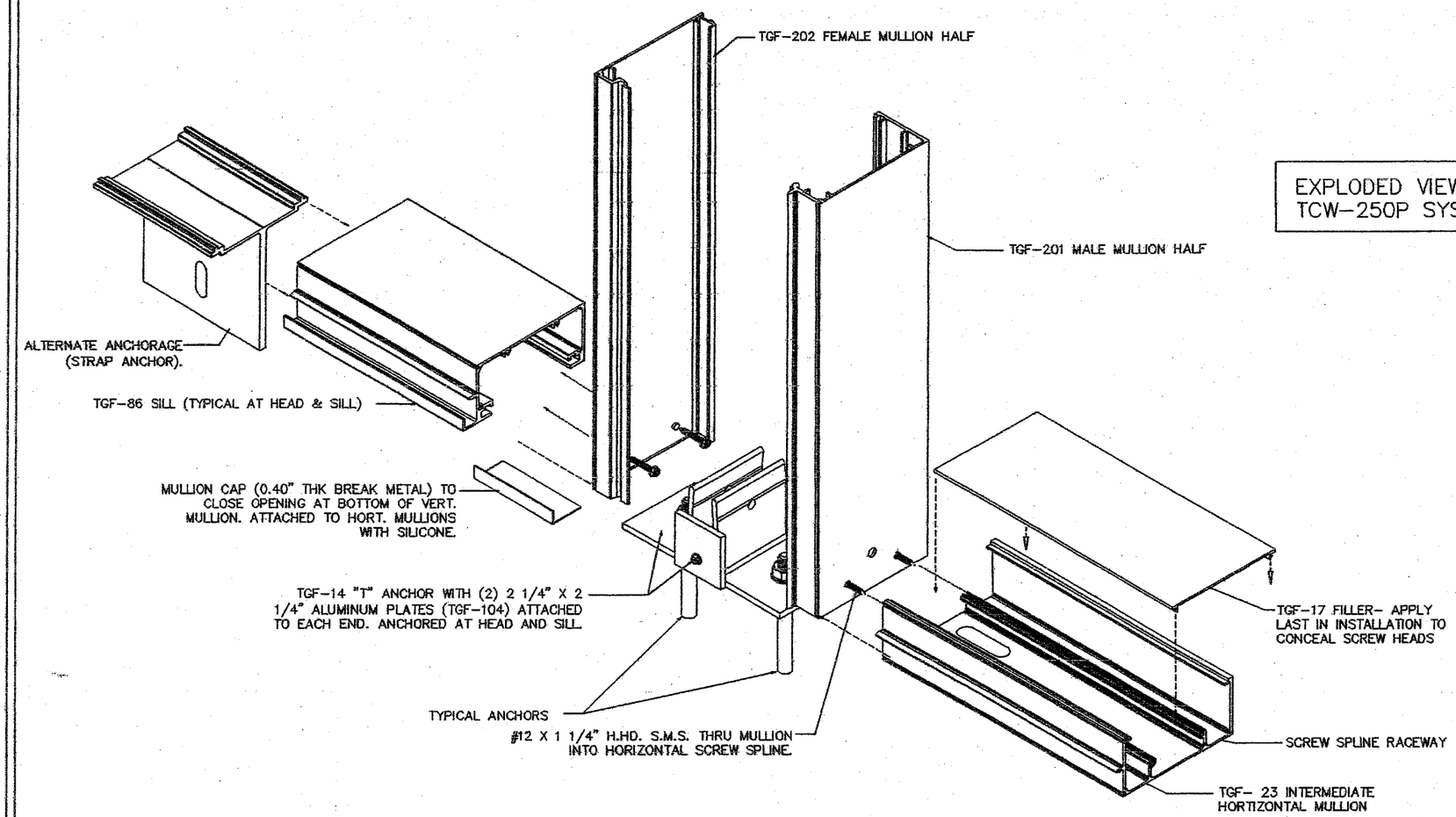

EXPLODED VIEW OF TCW-250P SYSTEM

Approved as complying with the Florida Building Code
Date 08/25/05
NOA# 05-0624.03
Miami-Dade Product Control Division
By

BROMLEY COOK ENGINEERING, INC.
STRUCTURAL ENGINEERING SERVICES
2004 N.E. 49th STREET
FORT LAUDERDALE, FLORIDA 33308
TEL: (954) 772-4624 FAX: (954) 772-4634

JUL 2 6 2005

WILLIAM D. COOK P.E.
FLA P.E. # 43904
FLA S.I. # 2008

TRAINOR GLASS COMPANY
1101 13th STREET WEST, RIVIERA BEACH, FL 33404
PH. (561) 863-7078 FAX (561) 863-7088
www.trainorglass.com
ATLANTA, GA. CHICAGO, IL. DENVER, CO. ORLANDO, FL. NEWARK, NJ.

REVISIONS

NO.	DATE	BY

PROJECT NAME: TCW-250P LMR SERIES

LARGE MISSILE IMPACT W/REINFORCED MULLIONS

DRAWING NUMBER: TCW250P-LMR

SHEET NO. 9 OF 9

DATE: 08/23/04
SCALE: N.T.S.
DRAWN: TOM C.
CHECKED BY: