MIAMI-DADE COUNTY
BUILDING CODE COMPLIANCE OFFICE (BCCO)
PRODUCT CONTROL DIVISION

MIAMI-DADE COUNTY, FLORIDA
METRO-DADE FLAGLER BUILDING

140 WEST FLAGLER STREET, SUITE 1603
MIAMI, FLORIDA 33130-1563
(305) 375-2901 FAX (305) 375-2908
www.buildingcodeonline.com

NOTICE OF ACCEPTANCE (NOA)

Veka, Inc.
100 Veka Drive
Fombell, PA 16123

SCOPE:
This NOA is being issued under the applicable rules and regulations governing the use of construction materials. The documentation submitted has been reviewed by Miami-Dade County Product Control Division and accepted by the Board of Rules and Appeals (BORA) to be used in Miami Dade County and other areas where allowed by the Authority Having Jurisdiction (AHJ).

This NOA shall not be valid after the expiration date stated below. The Miami-Dade County Product Control Division (In Miami Dade County) and/or the AHJ (in areas other than Miami Dade County) reserve the right to have this product or material tested for quality assurance purposes. If this product or material fails to perform in the accepted manner, the manufacturer will incur the expense of such testing and the AHJ may immediately revoke, modify, or suspend the use of such product or material within their jurisdiction. BORA reserves the right to revoke this acceptance, if it is determined by Miami-Dade County Product Control Division that this product or material fails to meet the requirements of the applicable building code.

This product is approved as described herein, and has been designed to comply with the High Velocity Hurricane Zone of the Florida Building Code.

DESCRIPTION: PVC Privacy Fence Panels

APPROVAL DOCUMENT: Drawing No. S-2428, titled "PVC Privacy Fence 72" Tahoe I, III & 72" Breckenridge II ", dated March 08, 2004, last revision #4 dated September 12, 2005, sheets 1 through 6 of 6, signed and sealed by Wendell W. Honey, P.E., bearing the Miami-Dade County Product Control Revision stamp with the Notice of Acceptance number and expiration date by the Miami-Dade County Product Control Division.

MISSILE IMPACT RATING: None

LABELING: Each fence panel shall bear a permanent label with the manufacturer's name or logo, city, state and the following statement: "Miami-Dade County Product Control Approved", unless otherwise noted herein.

RENEWAL of this NOA shall be considered after a renewal application has been filed and there has been no change in the applicable building code negatively affecting the performance of this product.

TERMINATION of this NOA will occur after the expiration date or if there has been a revision or change in the materials, use, and/or manufacture of the product or process. Misuse of this NOA as an endorsement of any product, for sales, advertising or any other purposes shall automatically terminate this NOA. Failure to comply with any section of this NOA shall be cause for termination and removal of NOA.

ADVERTISEMENT: The NOA number preceded by the words Miami-Dade County, Florida, and followed by the expiration date may be displayed in advertising literature. If any portion of the NOA is displayed, then it shall be done in its entirety.

INSPECTION: A copy of this entire NOA shall be provided to the user by the manufacturer or its distributors and shall be available for inspection at the job site at the request of the Building Official.

This NOA **revises NOA #04-0319.01** and consists of this page 1, evidence submitted pages E-1 and E-2 as well as approval document mentioned above.

The submitted documentation was reviewed by **Helmy A. Makar, P.E.**

PRODUCT CONTROL ACCEPTED

Helmy A. Makar
10/20/2005

NOA No 05-0701.01
Expiration Date: 07/08/2009
Approval Date: 10/20/2005

Veka, Inc.

NOTICE OF ACCEPTANCE: EVIDENCE SUBMITTED

1. EVIDENCE SUBMITTED UNDER PREVIOUS APPROVAL #04-0319.01

A. DRAWINGS

1. *Drawing No. S-2428, titled "PVC Privacy Fence 72" Tahoe 1 & 72" Breckenridge II ", dated March 08, 2004, last revision #2 dated June 14, 2004, sheets 1 through 3 of 3, signed and sealed by Wendell W. Honey, P.E.*

B. TESTS

1. *Test Report # 01-48836.01, dated February 02, 2004, issued by Architectural Testing for Series/Model 72" Breckenridge II, PVC Shadowbox Fence, signed and sealed by Joseph A. Reed, P.E.*
2. *Test Report # 01-48835.01, dated February 02, 2004, issued by Architectural Testing for Series/Model 72" Tahoe I, PVC Privacy Fence, signed and sealed by Joseph A. Reed, P.E.*

C. CALCULATIONS

1. *Fence and Post Analysis, dated March 17, 2004, one sheet, signed and sealed by Wendell W. Haney, P.E.*

D. QUALITY ASSURANCE

1. *By Miami-Dade County Building Code Compliance Office.*

E. MATERIAL CERTIFICATIONS

1. *None.*

2. NEW EVIDENCE SUBMITTED

A. DRAWINGS

1. *Drawing No. S-2428, titled "PVC Privacy Fence 72" Tahoe I, III & 72" Breckenridge II ", dated March 08, 2004, last revision #4 dated September 12, 2005, sheets 1 through 6 of 6, signed and sealed by Wendell W. Honey, P.E.*

B. TESTS

1. *Test Report # 56593.01-122-18, dated May 19, 2005, issued by Architectural Testing for 6' x 6' Tahoe III, 6' x 6' Breckenridge II (lattice), and 6' x 6' Breckenridge II (louver) fences, signed and sealed by Joseph A. Reed, P.E.*

C. CALCULATIONS

1. *Fence and Post Analysis, dated June 15, 2005, one sheet, signed and sealed by Wendell W. Haney, P.E.*

Helmy A. Makar, P. E.
Product Control Examiner
NOA No 05-0701.01
Expiration Date: 07/08/2009
Approval Date: 10/20/2005

D. QUALITY ASSURANCE

1. *By Miami-Dade County Building Code Compliance Office.*

E. MATERIAL CERTIFICATIONS

1. *None.*

Helmy A. Makar, P. E.
Product Control Examiner
NOA No 05-0701.01
Expiration Date: 07/08/2009
Approval Date: 10/20/2005

VEKA INC.

100 VEKA DRIVE
FOMBELL, PA 16123
PH. (724) 452-1000

PVC PRIVACY FENCE

SERIES: 72" TAHOE I & III

SERIES: 72" BRECKENRIDGE II

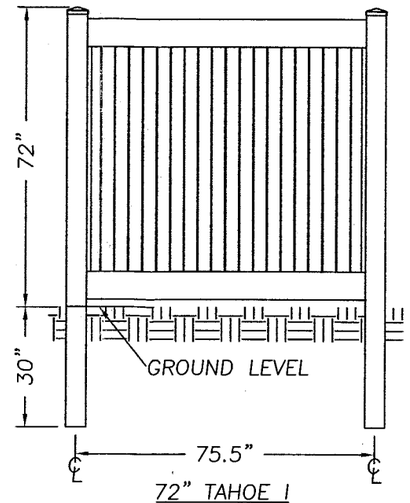

72" TAHOE I
VERTICAL SLATS
SEE SHEET 2 OF 6

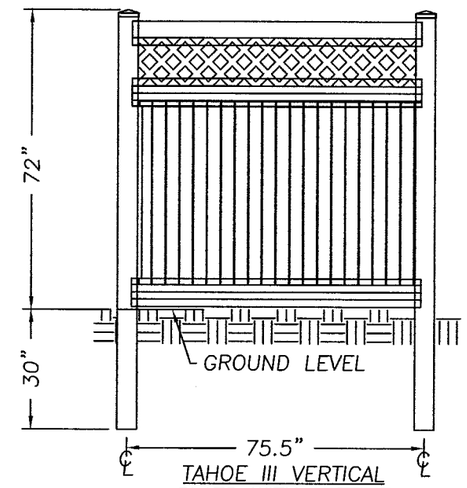

TAHOE III VERTICAL
SLATS WITH LATTICE
SEE SHEET 4 OF 6

GENERAL NOTES:

1. THIS PRODUCT IS DESIGNED TO COMPLY WITH THE "HVHZ" FLORIDA BUILDING CODE.
2. FOR WIND LOAD RATING SEE CHART THIS SHEET.
3. INSTALLATION OF THIS FENCE SHALL BE BASED ON THIS PRODUCT APPROVAL DOCUMENTS WITH NO DEVIATION FROM THE CONDITIONS DETAILED ON THIS DOCUMENT.
4. THIS PRODUCT APPROVAL DOCUMENT WILL BE CONSIDERED INVALID IF MODIFIED.
5. SITE SPECIFIC PROJECTS SHALL BE PREPARED BY A FLORIDA REGISTERED ENGINEER OR ARCHITECT WHICH WILL BECOME THE PROFESSIONAL OF RECORD (P.O.R.)FOR THE PROJECT AND WHO WILL BE RESPONSIBLE FOR THE PROPER USE OF THIS P.A.D.
6. THIS FENCE MANUFACTURE'S PERMANENT LABEL SHALL BE PLACED AT EACH FENCE ASSEMBLY. THE PERMANENT LABEL SHALL READ AS FOLLOWS: VEKA, INC.
   FOMBELL, PA.
   MIAMI-DADE COUNTY
   PRODUCT CONTROL
   APPROVED.
7. THE FENCE POST, RAILS AND PICKETS ARE A COEXTRUDED PART WITH A MIN. 0.020 CAP STOCK WHICH CONTAINS "UV" INHIBITORS. ALL PARTS ARE MADE OF PVC THAT IS APPROVED UNDER N.O.A.-02-0927.02

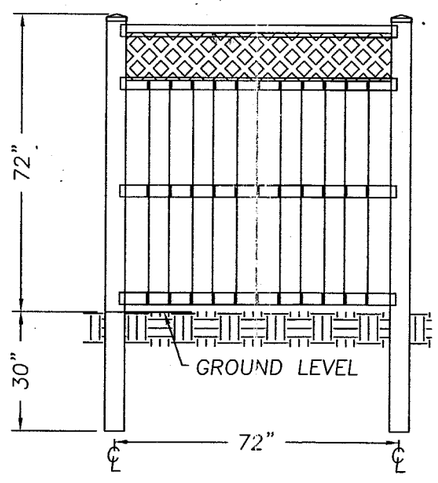

BRECKENRIDGE II VERTICAL
SLATS WITH LATTICE
SEE SHEET 6 OF 6

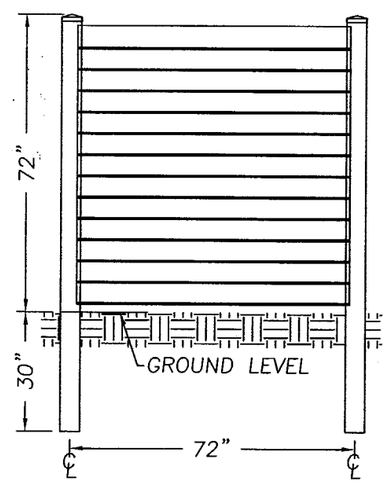

72" BRECKENRIDGE II
HORIZONTAL SLATS
SEE SHEET 5 OF 6

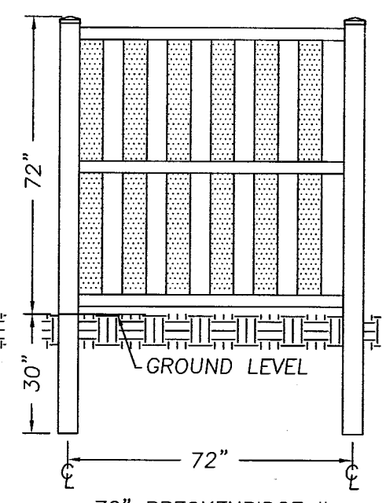

72" BRECKENRIDGE II
VERTICAL SLATS
SEE SHEET 3 OF 6

TABLE OF CONTENTS

SHEET #	DESCRIPTION
1	TYPICAL ELEVATIONS & GENERAL NOTES
2	72" TAHOE I FENCE, VERTICAL SLATS
3	72" BRECKENRIDGE II FENCE, VERTICAL SLATS
4	72" TAHOE III FENCE, WITH LATTICE
5	72" BRECKENRIDGE II FENCE, HORIZONTAL SLATS
6	72" BRECKENRIDGE II FENCE, WITH LATTICE

WIND LOAD RATING

THIS FENCE AND IT'S VERTICAL SUPPORTS ARE DESIGNED FOR 75 MPH FASTEST MILE WIND SPEED OR 90 MPH 3-SECOND GUST IN COMPLIANCE WITH SECTION 1612.2.1 OF THE FLORIDA BUILDING CODE.

PRODUCT REVISED
as complying with the Florida
Buiding Code
Acceptance No 05-0701.01
Expiration Date 07/08/2009
By Miami Dade Product Control
Division

Documents Prepared By:
RW BUILDING CONSULTANTS, INC.
P.O. Box 230 Valrico FL. 33595
Phone No.: 813.659.9197
Florida Board of Professional Engineers
Certificate Of Authorization No. 9813
Wendell W. Haney, P.E. NO. 54158
9/12/05

PRODUCT: PVC PRIVACY FENCE 72" TAHOE I, III & 72" BRECKENRIDGE II

PART OR ASSEMBLY: TYPICAL ELEVATIONS & GENERAL NOTES

REVISIONS

NO.	DATE	BY
4	09/12/05	REV. PER DADE COMMENTS	AEM
3	06/08/05	ADD 3 MODELS	AEM
2	06/14/04	CHANGES AS PER DADE COUNTY	WH
1	06/03/04	CHANGES AS PER DADE COUNTY	WH

DATE: 03/08/04
SCALE: N.T.S.
DWG. BY: AEM
CHK. BY: WH
DRAWING NO.: S-2428
SHEET 1 OF 6

R:\PROJ 650 - 800\PF726\S-2428 REV 4 PER DADE\S-2428-1-R4.DWG

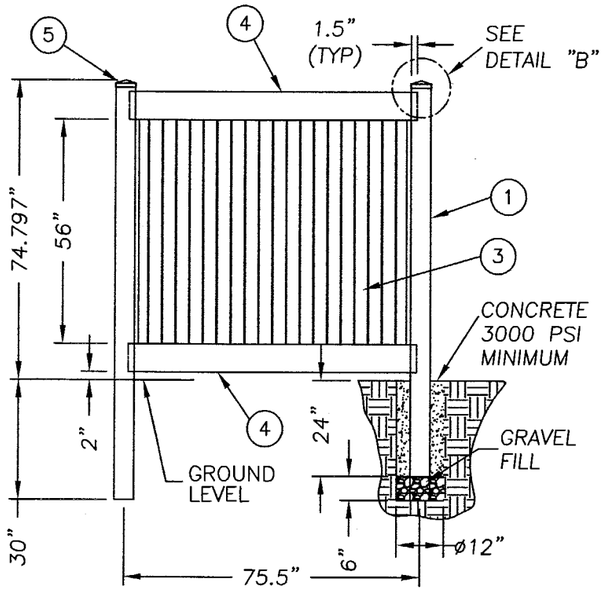

72" TAHOE I VERTICAL SLATS

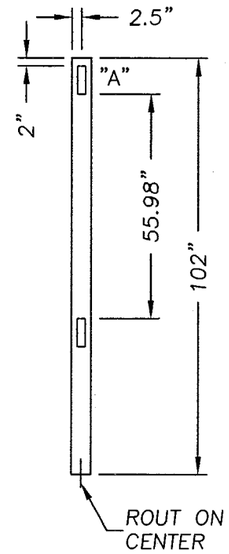

5" X 5" FENCE POST ROUTING

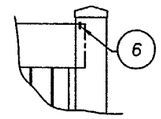

DETAIL "B"

ITEM 6 IS USED TO MAINTAIN MINIMUM EMBEDMENT OF TOP RAIL TO POST.

ITEM	DESCRIPTION	MATERIAL
1	5" X 5" X 102" FENCE POST	PVC
2	1.055" X 1.081" X 56" U-CHANNEL	PVC
3	7/8" X 7" X 58.75" TONGUE & GROOVE PICKET	PVC
4	2" X 7" X 73.5" RIBBED RAIL	PVC
5	5" X 5" HORSE CAP	PVC
6	#10 X 1" SELF TAPPING SCREW	ST. ST'L.

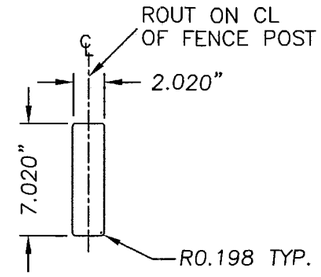

ROUTER DETAIL "A"

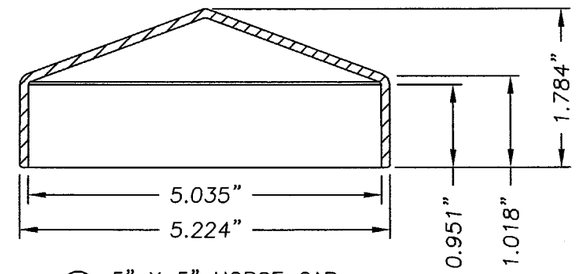

5 5" X 5" HORSE CAP

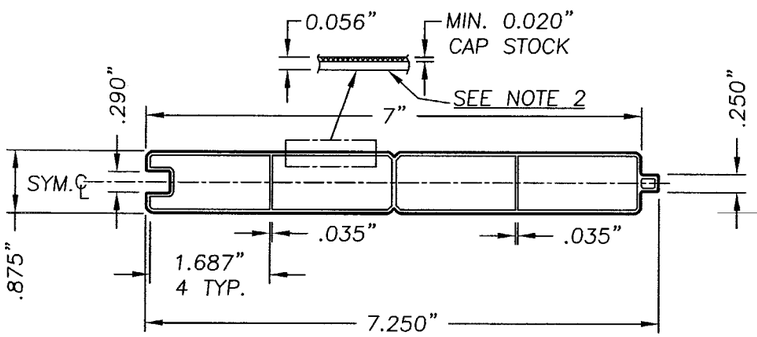

3 7/8" X 7" TONGUE & GROOVE PICKET

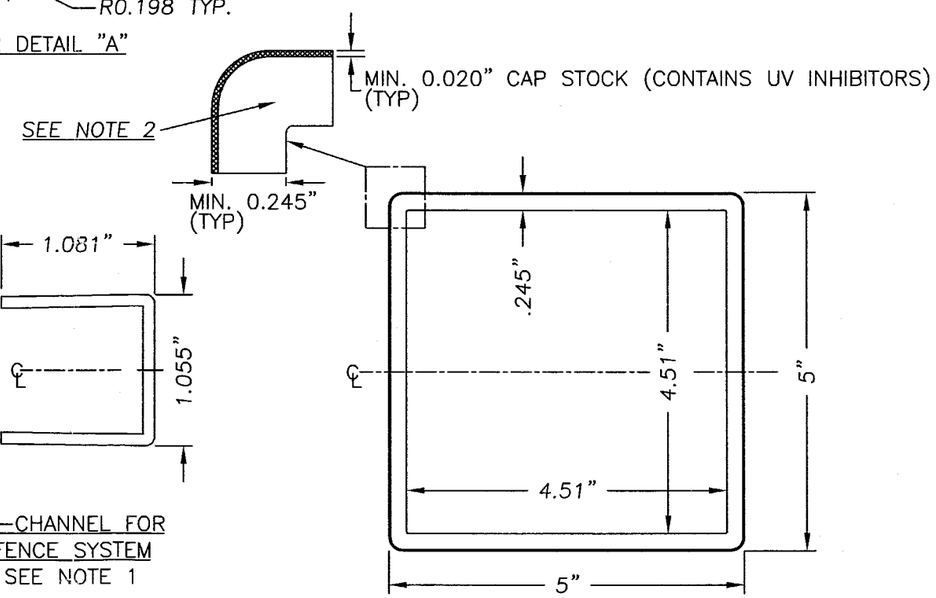

1 5" X 5" POST FOR FENCE SYSTEM

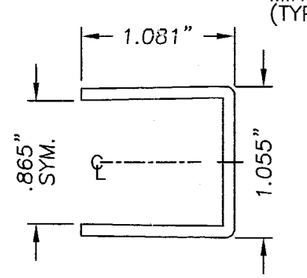

2 U-CHANNEL FOR FENCE SYSTEM
SEE NOTE 1

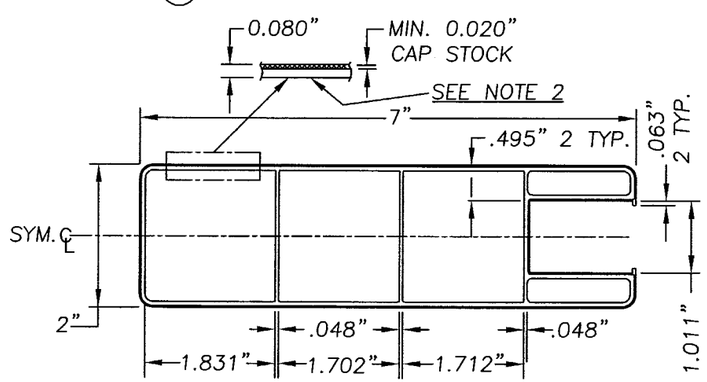

4 2" X 7" RIBBED RAIL FOR FENCE SYSTEM

NOTE:

1. "U" CHANNEL IS ATTACHED TO THE FENCE POST WITH #10 X 1.0" SELF TAPPING SCREW LOCATED @ 2.5" FROM THE TOP AND BOTTOM WITH 2 MORE MAX 17.0" ON CENTER.
2. SUBSTRATE IS WHITE PVC TINTED VECKAblue FOR TRADEMARK VERIFICATION. CAP STOCK CONTAINS UV INHIBITORS.

PRODUCT REVISED
as complying with the Florida Building Code
Acceptance No 05-0701.01
Expiration Date 07/08/2009
By Helmy A. Abdo
Miami Dade Product Control Division

Documents Prepared By:
RCW BUILDING CONSULTANTS, INC.
P.O. Box 230 Valrico FL. 33595
Phone No.: 813.659.9187
Florida Board of Professional Engineers
Certificate Of Authorization No. 9813
Wendell W. Honey, P.E. NO. 54158
9/12/05

PRODUCT: PVC PRIVACY FENCE 72" TAHOE I, III & 72" BRECKENRIDGE II

PART OR ASSEMBLY: 72' TAHOE I FENCE, VERTICAL SLATS

NO.	DATE	REVISIONS	BY
4	09/12/05	REV. PER DADE COMMENTS	AEM
3	06/08/05	ADD 3 MODELS	AEM
2	06/14/04	CHANGES AS PER DADE COUNTY	WH
1	06/03/04	CHANGES AS PER DADE COUNTY	WH

DATE: 03/08/04
SCALE: N.T.S.
DWG. BY: AEM
CHK. BY: WH
DRAWING NO.: S-2428
SHEET 2 OF 6

R:\PROJ 650 - 800\PF726\S-2428 REV 4 PER DADE\S-2428-2-R4.DWG

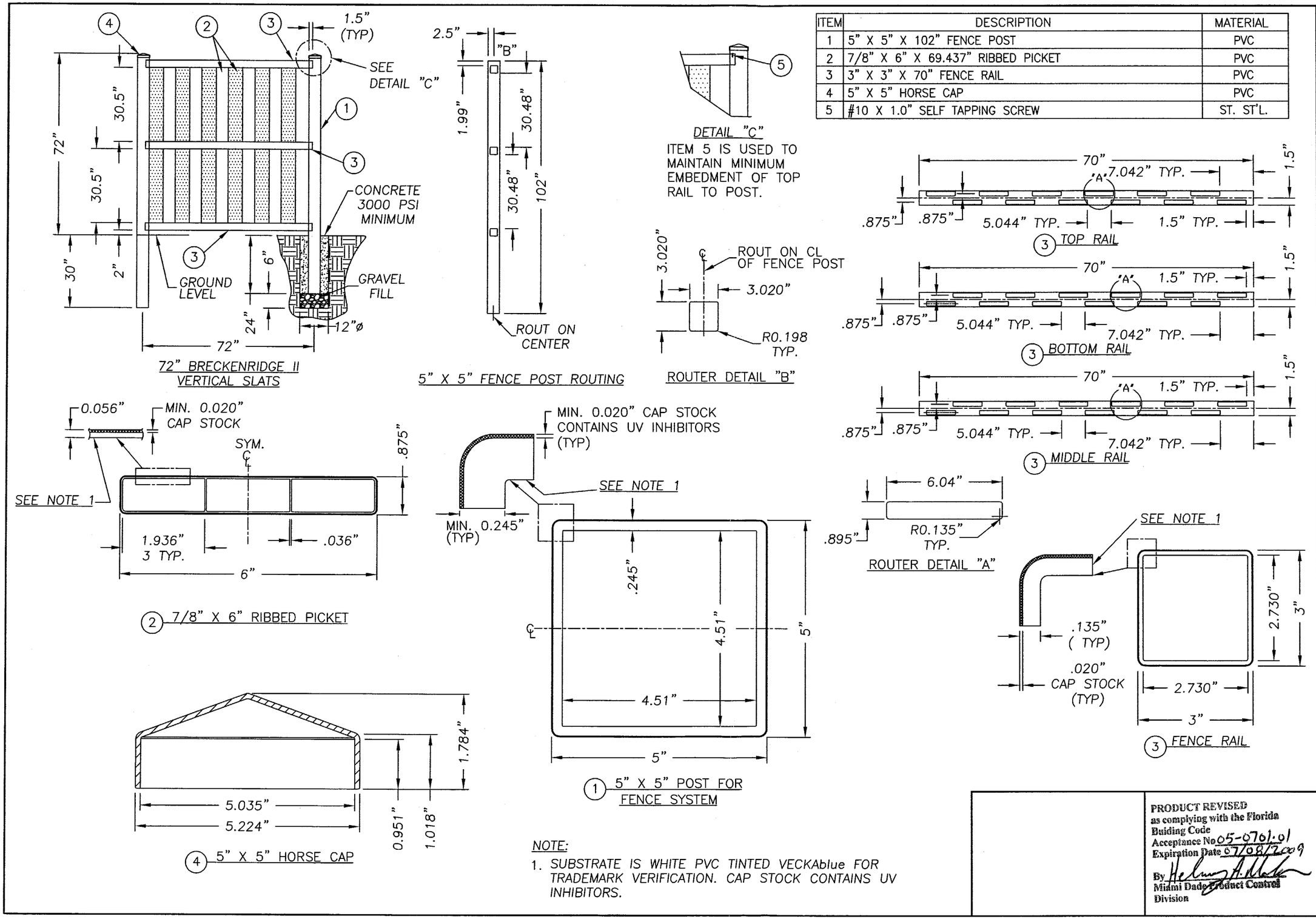

ITEM	DESCRIPTION	MATERIAL
1	5" X 5" X 102" FENCE POST	PVC
2	7/8" X 6" X 69.437" RIBBED PICKET	PVC
3	3" X 3" X 70" FENCE RAIL	PVC
4	5" X 5" HORSE CAP	PVC
5	#10 X 1.0" SELF TAPPING SCREW	ST. ST'L.

NOTE:

1. SUBSTRATE IS WHITE PVC TINTED VECKAblue FOR TRADEMARK VERIFICATION. CAP STOCK CONTAINS UV INHIBITORS.

PRODUCT REVISED as complying with the Florida Buiding Code
Acceptance No 05-0701.01
Expiration Date 07/08/2009
By [signature]
Miami Dade Product Control Division

Documents Prepared By:
RW BUILDING CONSULTANTS, INC.
P.O. Box 230 Valrico FL. 33595
Phone No.: 813.659.9197
Florida Board of Professional Engineers
Certificate Of Authorization No. 9813
[signature] 9/12/05
Wendell W. Haney, P.E. No. 54158

PRODUCT: PVC PRIVACY FENCE 72" TAHOE I, III & 72" BRECKENRIDGE II

PART OR ASSEMBLY: 72" BRECKENRIDGE II FENCE, VERTICAL SLATS

NO.	DATE	REVISIONS	BY
4	09/12/05	REV. PER DADE COMMENTS	AEM
3	06/08/05	ADD 3 MODELS	AEM
2	06/14/04	CHANGES AS PER DADE COUNTY	WH
1	06/03/04	CHANGES AS PER DADE COUNTY	WH

DATE: 03/08/04
SCALE: N.T.S.
DWG. BY: AEM
CHK. BY: WH
DRAWING NO.: S-2428
SHEET 3 OF 6

R:\PROJ 650 - 800\PF726\S-2428 REV 4 PER DADE\S-2428-3-R4.DWG

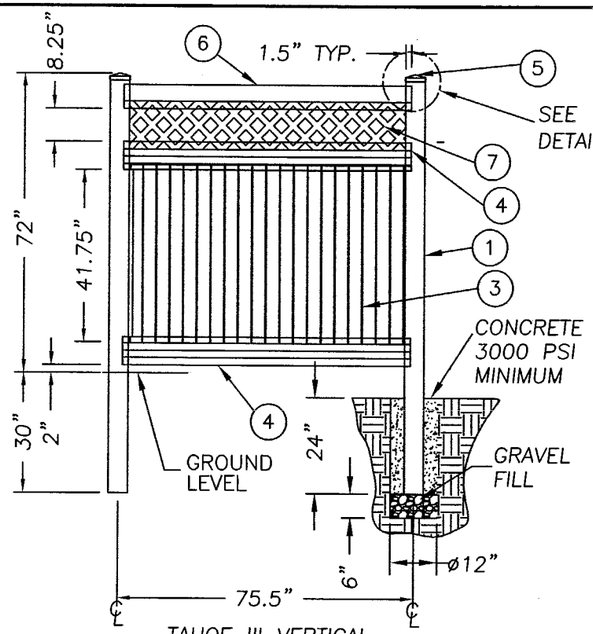

TAHOE III VERTICAL SLATS WITH LATTICE

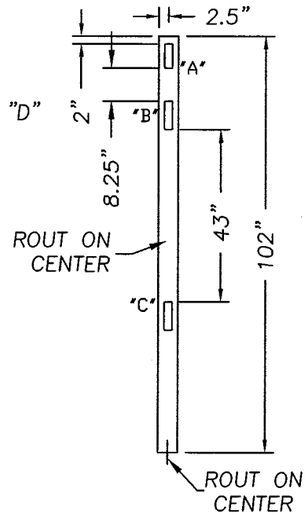

5" X 5" FENCE POST ROUTING

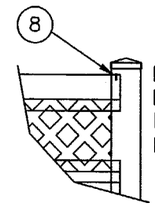

ITEM 8 IS USED TO MAINTAIN MINIMUM EMBEDMENT OF TOP RAIL TO POST.

DETAIL "D"

ITEM	DESCRIPTION	MATERIAL
1	5" X 5" X 102" FENCE POST	PVC
2	1.055" X 1.081" X 43" U-CHANNEL	PVC
3	7/8" X 7" X 45-3/4" TONGUE & GROOVE PICKET	PVC
4	RIBBED RAIL 2" X 7" X 73-1/2"	PVC
5	5" X 5" HORSE CAP	PVC
6	2" X 6" X 73-1/2" FENCE RAIL	PVC
7	LATTICE 3/16" X 12" X 70-1/2"	PVC
8	#10 X 1" SELF TAPPING SCREW	ST. ST'L.

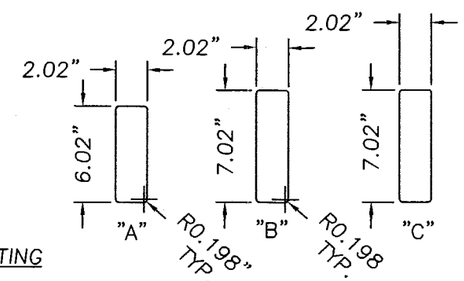

ROUTER DETAIL "A", "B" & "C"

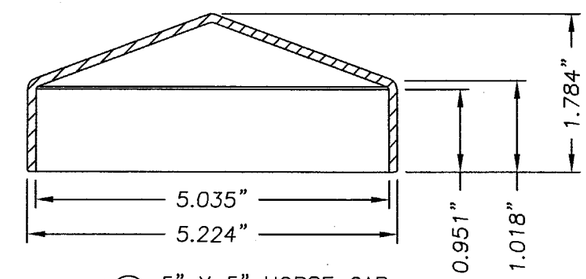

5 5" X 5" HORSE CAP

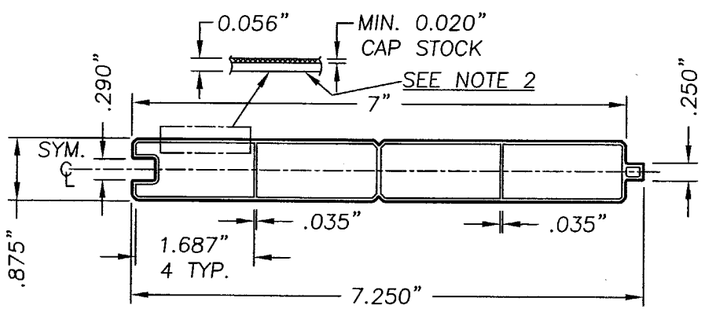

3 7/8" X 7" TONGUE & GROOVE PICKET

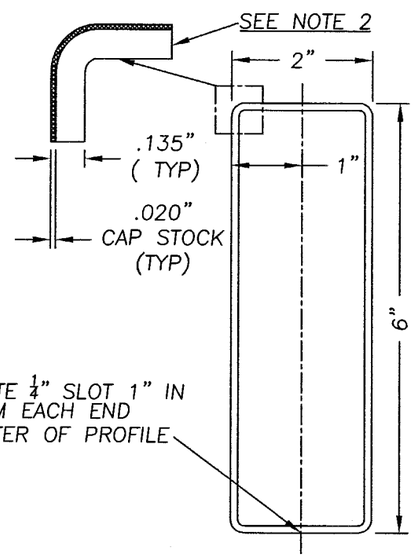

6 FENCE TOP RAIL

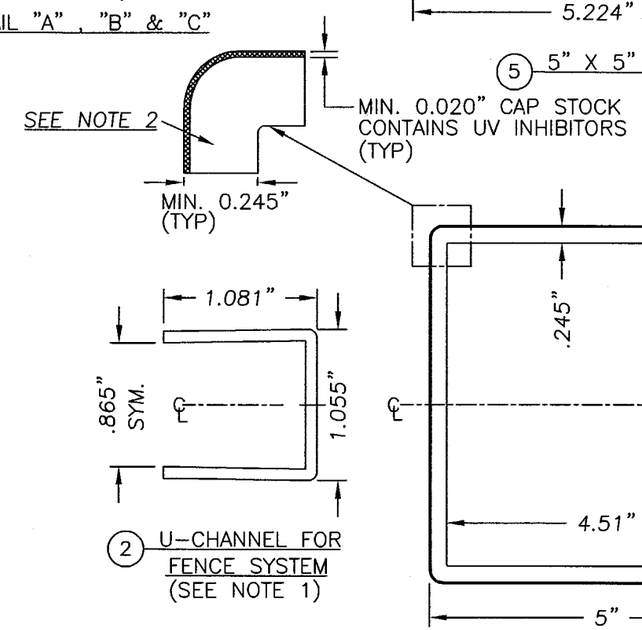

2 U-CHANNEL FOR FENCE SYSTEM (SEE NOTE 1)

1 5" X 5" POST FOR FENCE SYSTEM

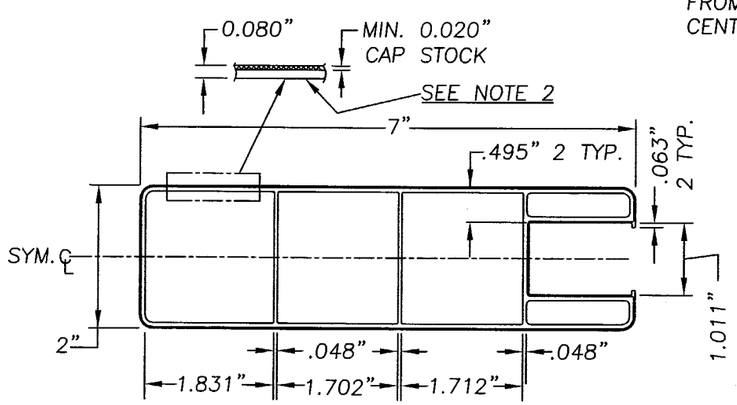

4 2" X 7" RIBBED RAIL FOR FENCE SYSTEM

NOTE:

1. "U" CHANNEL IS ATTACHED TO THE FENCE POST WITH #10 X 1.0" SELF TAPPING SCREW LOCATED @ 2.5" FROM THE TOP AND BOTTOM WITH 2 MORE MAX 17.0" ON CENTER.
2. SUBSTRATE IS WHITE PVC TINTED VECKAblue FOR TRADEMARK VERIFICATION. CAP STOCK CONTAINS UV INHIBITORS.

PRODUCT REVISED
as complying with the Florida Building Code
Acceptance No. 05-0701.01
Expiration Date 07/08/2009
By Helmy A. Melek
Miami Dade Product Control Division

Documents Prepared By:
RGW BUILDING CONSULTANTS, INC.
P.O. Box 230 Valrico FL. 33595
Phone No.: 813.659.9197
Florida Board of Professional Engineers
Certificate Of Authorization No. 9813
Wendell W. Harley P.E. No. 54158
9/12/05

PRODUCT: PVC PRIVACY FENCE 72" TAHOE I, III & 72" BRECKENRIDGE II

PART OR ASSEMBLY: 72" TAHOE III FENCE, WITH LATTICE

REVISIONS

NO.	DATE		BY
4	09/12/05	REV. PER DADE COMMENTS	AEM
3	06/08/05	ADD 3 MODELS	AEM
2	06/14/04	CHANGES AS PER DADE COUNTY	WH
1	06/03/04	CHANGES AS PER DADE COUNTY	WH

DATE: 03/08/04
SCALE: N.T.S.
DWG. BY: AEM
CHK. BY: WH
DRAWING NO.: S-2428
SHEET 4 OF 6

R:\PROJ 650 - 800\PF726\S-2428 REV 4 PER DADE\S-2428-4-R4.DWG

ITEM	DESCRIPTION	MATERIAL
1	5" X 5" X 102" FENCE POST	PVC
2	5" X 5" HORSE CAP	PVC
3	7/8" X 6" X 70" RIBBED PICKET	PVC

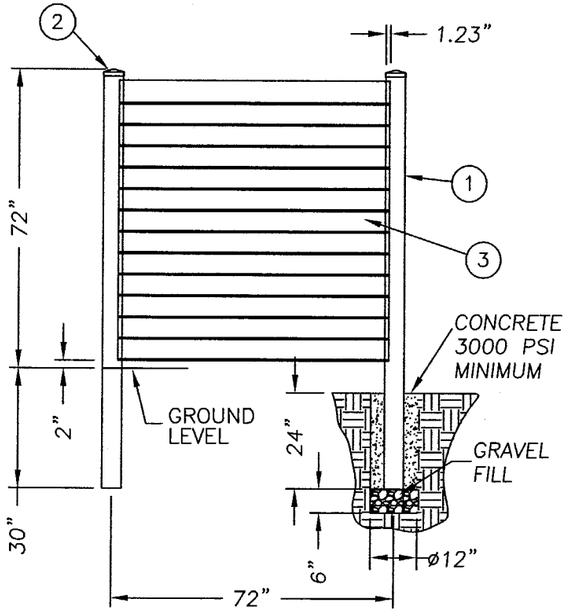

72" BRECKENRIDGE II
HORIZONTAL SLATS

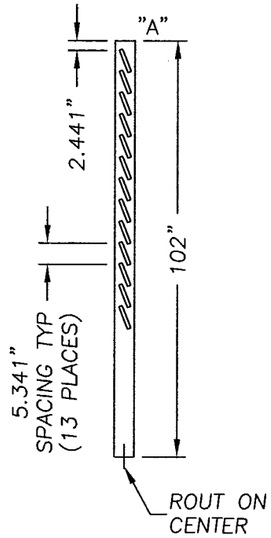

5" X 5" FENCE POST ROUTING

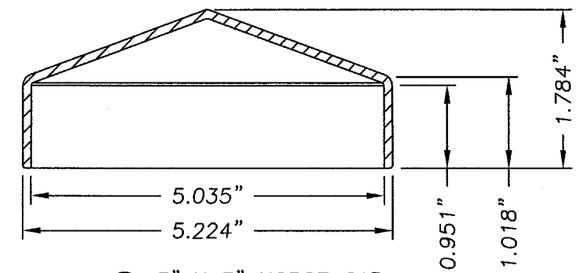

2 5" X 5" HORSE CAP

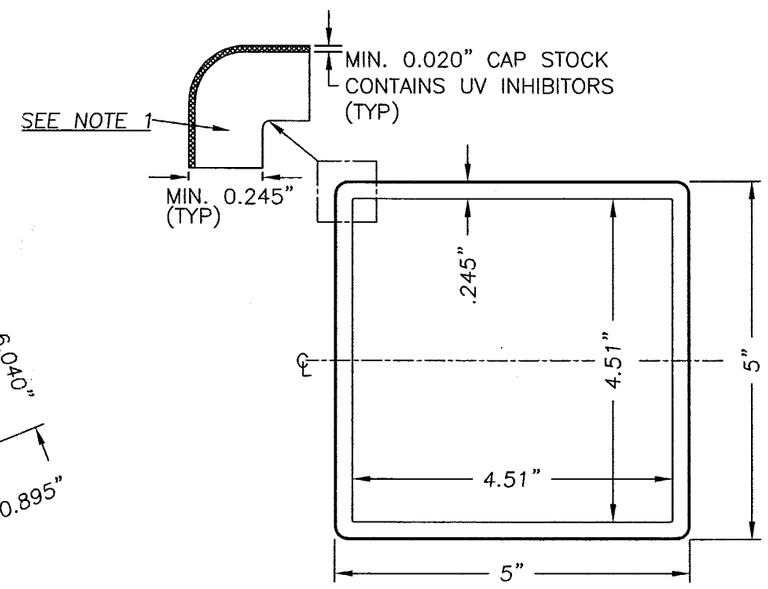

1 5" X 5" POST FOR
FENCE SYSTEM

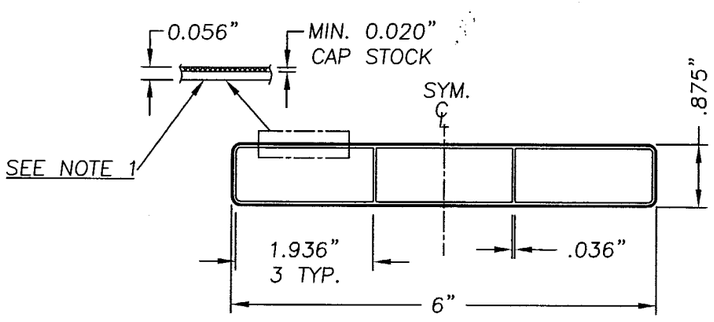

3 7/8" X 6" RIBBED PICKET

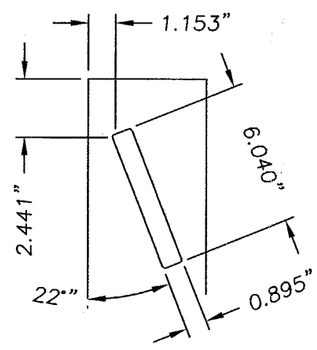

ROUTER DETAIL "A"

NOTE:

1. SUBSTRATE IS WHITE PVC TINTED VECKAblue FOR TRADEMARK VERIFICATION. CAP STOCK CONTAINS UV INHIBITORS.

Documents Prepared By:
RW BUILDING CONSULTANTS, INC.
P.O. Box 230 Valrico FL. 33595
Phone No.: 813.659.9197
Florida Board of Professional Engineers
Certificate Of Authorization No. 9813
Wendell W. Haney, P.E. NO. 54158

PRODUCT: PVC PRIVACY FENCE 72" TAHOE I, III & 72" BRECKENRIDGE II

PART OR ASSEMBLY: 72" BRECKENRIDGE II FENCE, HORIZONTAL SLATS

NO.	DATE	REVISIONS	BY
4	09/12/05	REV. PER DADE COMMENTS	AEM
3	06/08/05	ADD 3 MODELS	AEM
2	06/14/04	CHANGES AS PER DADE COUNTY	WH
1	06/03/04	CHANGES AS PER DADE COUNTY	WH

PRODUCT REVISED
as complying with the Florida Building Code
Acceptance No 05-0701.01
Expiration Date 07/08/2009
By Helmy A. Malo
Miami Dade Product Control Division

DATE: 03/08/04
SCALE: N.T.S.
DWG. BY: AEM
CHK. BY: WH
DRAWING NO.: S-2428
SHEET 5 OF 6

R:\PROJ 650 - 800\PF726\S-2428 REV 4 PER DADE\S-2428-5-R4.DWG

ITEM	DESCRIPTION	MATERIAL
1	5" X 5" X 102" FENCE POST	PVC
2	LATTICE 3/16" X 12" X 67"	PVC
3	FENCE RAIL (TOP, MIDDLE & BOTTOM) 3" X 3" 70-3/4"	PVC
4	#10 X 1" SELF TAPPING SCREW	S.S.
5	5" X 5" HORSE CAP	PVC
6	7/8" X 6" X 56-1/2" RIBBED PICKET	PVC

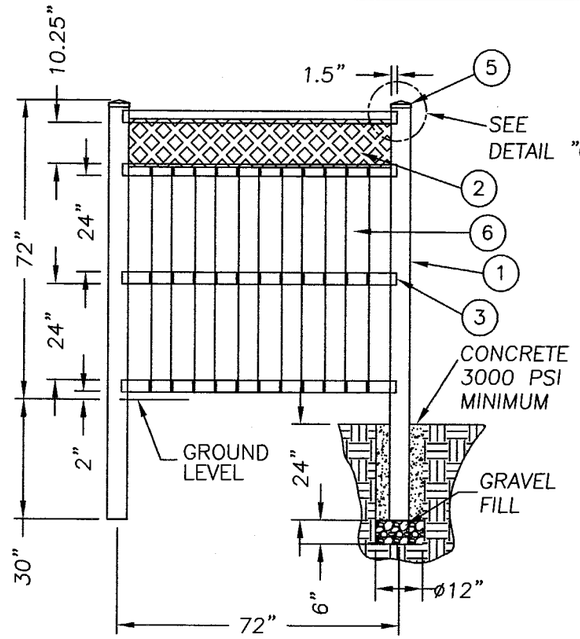

BRECKENRIDGE II VERTICAL SLATS WITH LATTICE

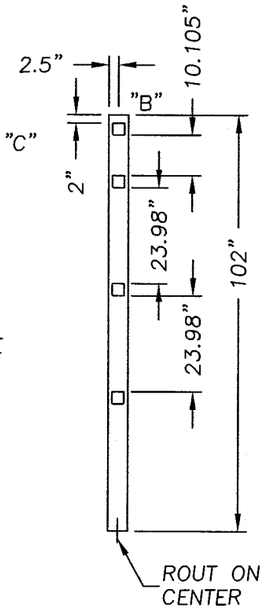

5" X 5" FENCE POST ROUTING

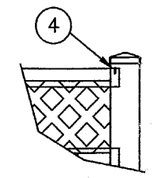

DETAIL "C"

ITEM 4 IS USED TO MAINTAIN MINIMUM EMBEDMENT OF TOP RAIL TO POST.

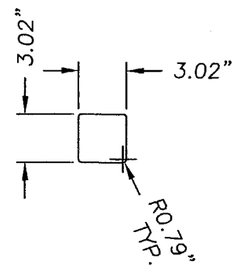

ROUTER DETAIL "B"

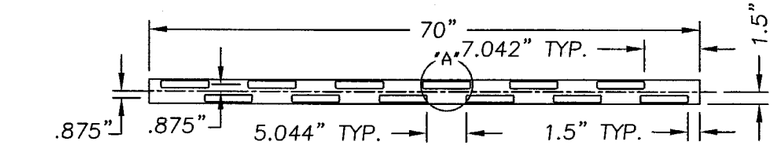

3 TOP RAIL

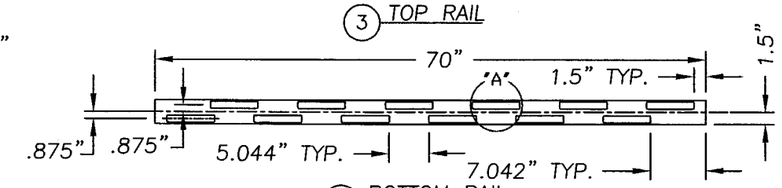

3 BOTTOM RAIL

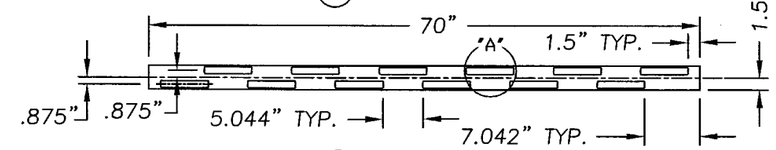

3 MIDDLE RAIL

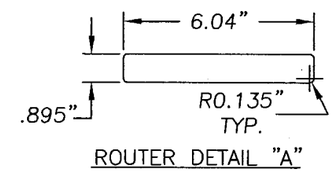

ROUTER DETAIL "A"

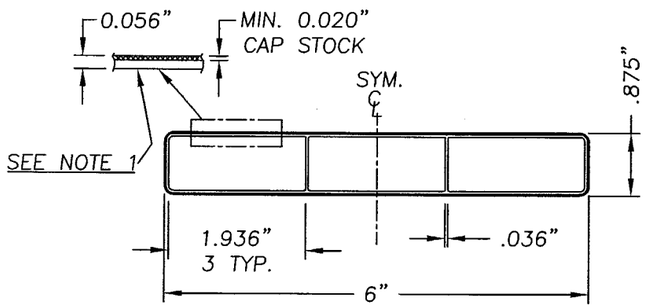

6 7/8" X 6" RIBBED PICKET

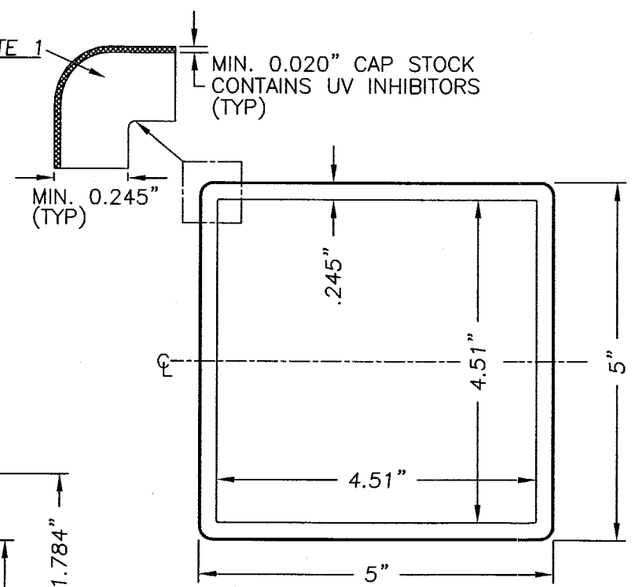

1 5" X 5" POST FOR FENCE SYSTEM

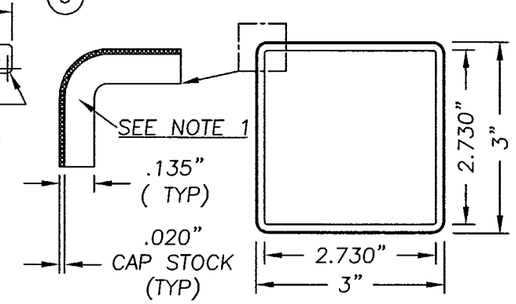

3 FENCE RAIL

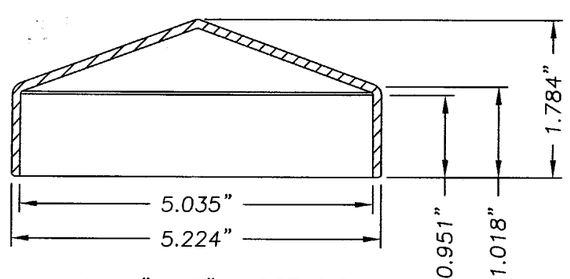

5 5" X 5" HORSE CAP

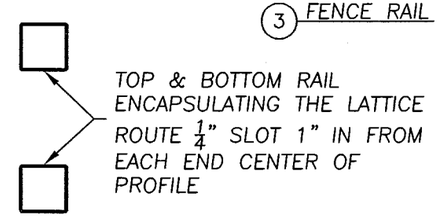

TOP & BOTTOM RAIL ENCAPSULATING THE LATTICE ROUTE $\frac{1}{4}$" SLOT 1" IN FROM EACH END CENTER OF PROFILE

NOTE:

1. SUBSTRATE IS WHITE PVC TINTED VECKAblue FOR TRADEMARK VERIFICATION. CAP STOCK CONTAINS UV INHIBITORS.

PRODUCT REVISED
as complying with the Florida Building Code
Acceptance No. 05-0701.01
Expiration Date 07/08/2009
By Miami Dade Product Control Division

Documents Prepared By:
RW BUILDING CONSULTANTS, INC.
P.O. Box 230 Valrico FL. 33595
Phone No.: 813.659.9197
Florida Board of Professional Engineers
Certificate Of Authorization No. 9813
Wendell W. Morley, P.E. No. 54158
9/12/05

PRODUCT: PVC PRIVACY FENCE 72" TAHOE I, III & 72" BRECKENRIDGE II

PART OR ASSEMBLY: 72" BRECKENRIDGE II FENCE, WITH LATTICE

REVISIONS

NO.	DATE	BY	
1	06/03/04	WH	CHANGES AS PER DADE COUNTY
2	06/14/04	WH	CHANGES AS PER DADE COUNTY
3	06/08/05	AEM	ADD 3 MODELS
4	09/12/05	AEM	REV. PER DADE COMMENTS

DATE: 03/08/04
SCALE: N.T.S.
DWG. BY: AEM
CHK. BY: WH
DRAWING NO.: S-2428
SHEET 6 OF 6

R:\PROJ 650 - 800\PF726\S-2428 REV 4 PER DADE\S-2428-6-R4.DWG