MIAMI-DADE COUNTY

BUILDING CODE COMPLIANCE OFFICE (BCCO)
PRODUCT CONTROL DIVISION

MIAMI-DADE COUNTY, FLORIDA
METRO-DADE FLAGLER BUILDING
140 WEST FLAGLER STREET, SUITE 1603
MIAMI, FLORIDA 33130-1563
(305) 375-2901 FAX (305) 375-2908
www.buildingcodeonline.com

NOTICE OF ACCEPTANCE (NOA)

Kawneer Company, Inc.
555 Guthridge Court
Norcross, Georgia 30092

SCOPE:

This NOA is being issued under the applicable rules and regulations governing the use of construction materials. The documentation submitted has been reviewed by Miami-Dade County Product Control Division and accepted by the Board of Rules and Appeals (BORA) to be used in Miami Dade County and other areas where allowed by the Authority Having Jurisdiction (AHJ).

This NOA shall not be valid after the expiration date stated below. The Miami-Dade County Product Control Division (In Miami Dade County) and/or the AHJ (in areas other than Miami Dade County) reserve the right to have this product or material tested for quality assurance purposes. If this product or material fails to perform in the accepted manner, the manufacturer will incur the expense of such testing and the AHJ may immediately revoke, modify, or suspend the use of such product or material within their jurisdiction. BORA reserves the right to revoke this acceptance, if it is determined by Miami-Dade County Product Control Division that this product or material fails to meet the requirements of the applicable building code.

This product is approved as described herein, and has been designed to comply with the Florida Building Code, including High Velocity Hurricane Zone of the Florida Building Code.

DESCRIPTION: Series "HPX" Aluminum Sliding Glass Door-L. M. Impact

APPROVAL DOCUMENT: Drawing No. **T592-802,** titled "HPX-Sliding Glass Door", sheets 1 through 7 of 7, prepared by Frank L. Bennardo, P. E. Inc., Consulting Engineers, dated 01/30/04 and last revised on 11/08/2005, signed and sealed by Frank L. Bennardo, P.E., bearing the Miami-Dade County Product Control Revision stamp with the Notice of Acceptance number and expiration date by the Miami-Dade County Product Control Division.

MISSILE IMPACT RATING: Large and Small Missile Impact Resistant

LABELING: Each unit shall bear a permanent label with the manufacturer's name or logo, city, state and following statement: "Miami-Dade County Product Control Approved", unless otherwise noted herein.

RENEWAL of this NOA shall be considered after a renewal application has been filed and there has been no change in the applicable building code negatively affecting the performance of this product.

TERMINATION of this NOA will occur after the expiration date or if there has been a revision or change in the materials, use, and/or manufacture of the product or process. Misuse of this NOA as an endorsement =- f any product, for sales, advertising or any other purposes shall automatically terminate this NOA. Failure to comply with any section of this NOA shall be cause for termination and removal of NOA.

ADVERTISEMENT: The NOA number preceded by the words Miami-Dade County, Florida, and followed by the expiration date may be displayed in advertising literature. If any portion of the NOA is displayed, then it shall be done in its entirety.

INSPECTION: A copy of this entire NOA shall be provided to the user by the manufacturer or its distributors and shall be available for inspection at the job site at the request of the Building Official.

This NOA **revises &supersedes NOA # 04-0506.02** and consists of this page 1 and evidence page E-1, as well as approval document mentioned above.

The submitted documentation was reviewed by **Ishaq I. Chanda, P.E.**

PRODUCT CONTROL ACCEPTED

11/14/15

Kawneer Company, Inc.

NOTICE OF ACCEPTANCE: EVIDENCE SUBMITTED

A. DRAWINGS *(Transferred from NOA# **04-0506.02**)*

1. Manufacturer's die drawings and sections.
2. Drawing No. **T592-802,** titled "HPX-Sliding Glass Door", sheets 1 through 7 of 7, prepared by Frank L. Bennardo, P. E. Inc., Consulting Engineers, dated 01/30/04 and last revised on 11/08/2005, signed and sealed by Frank L. Bennardo, P.E.

B. TESTS *(Transferred from NOA# **04-0506.02**)*

1. Test reports on 1) Air Infiltration Test, per FBC, TAS 202-94
   2) Uniform Static Air Pressure Test, Loading per FBC, TAS 202-94
   3) Water Resistance Test, per FBC, TAS 202-94
   4) Forced Entry Test, per FBC 2411 3.2.1 and TAS 202-94
   5) Large Missile impact Test per FBC, TAS 201-94
   6) Cyclic Wind Pressure Loading per FBC, TAS 203-94

Along with marked-up drawings and installation diagram of aluminum sliding glass door, prepared by American Test Lab Inc, Test Report No. **ATLNC 1021.01-03**, dated 01/14/04, signed and sealed by William F. Wescott, P.E.
Note: This test report has been revised by addendum letters 08/12/04, 09/15/04 and 02/03/05, issued by American Test Lab Inc, signed & sealed by William F. Wescott, P.E.

C. CALCULATIONS

1. Anchor Calculations, ASTM-E1300, and structural analysis, dated 06/01/05, prepared, signed and sealed by Frank L. Bennardo, P.E.,
2. Anchor verification calculations dated May 04, 2004 and last revised on October 07, 2004, prepared, signed and sealed by Frank L. Bennardo, P.E. ***(Submitted under original NOA #04-0506.02)***

D. QUALITY ASSURANCE BY:

1. Miami-Dade Building Code Compliance Office (BCCO).

E. MATERIAL CERTIFICATIONS

1. Notice of Acceptance No. **01-1204.01** issued to E.I. DuPont DeNemours, for "Sentry Glass ® Plus" dated 1/17/02, expiring on 1/14/07

F. STATEMENTS *(Transferred from NOA# **04-0506.02**)*

1. Anchor Verification Calculations, complying w/ FBC-2004, dated 07-01-2005, prepared, signed and sealed by Frank L. Bennardo, P. E.
2. Statement letters of conformance and "No financial interest", both dated July 01, 2005, signed and sealed by Frank L. Bennardo, P.E.
3. Statement of compliance, issued as part of the above referenced test report issued by American Test lab Inc. ***(Submitted under original NOA #04-0506.02)***

G. OTHER

1. This NOA revises & supersedes NOA # *04-0506.02*, expiring 02/24/10.
2. NOA # **04-0506.02**, issued to Kawneer Company, Inc., expiring on 02/24/10.

Ishaq I. Chanda

Ishaq I. Chanda, P.E.
Product Control Examiner
NOA No 05-0707.02
Expiration Date: February 24, 2010
Approval Date: November 03, 2005

KAWNEER HPX ALUMINUM SLIDING GLASS DOOR
LARGE MISSILE IMPACT (OXO, XO, OX)

REV.	DATE	REQUEST LETTER	BY
0	04/28/04	INIT ISSUE	CL
1	9/15/04	COUNTY COMMENTS	CL
2	6/14/05	2004 FBC	CL

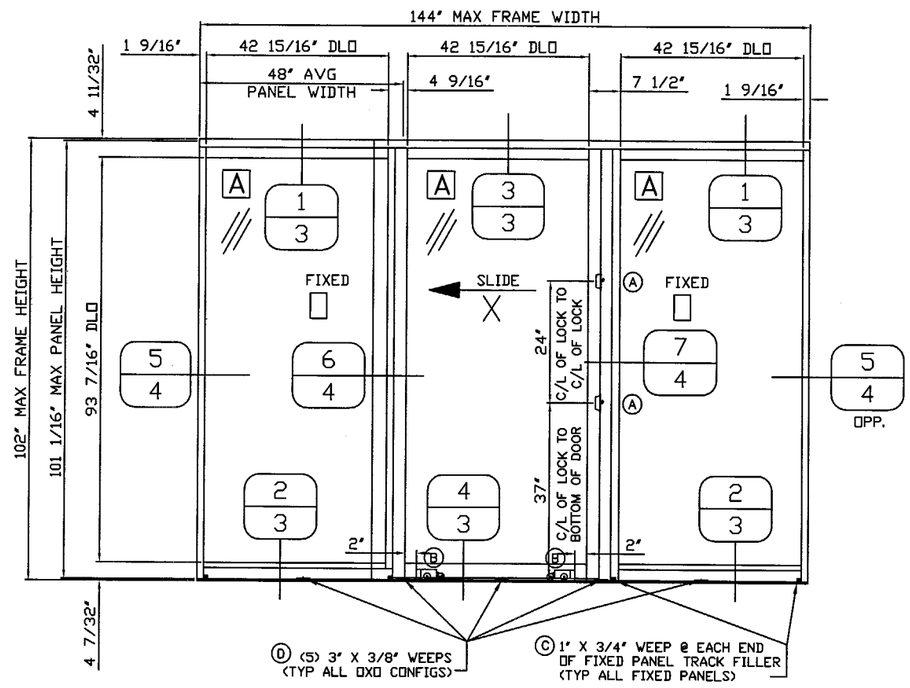

DESIGN PRESSURE = +100/- 125 PSF

GENERAL NOTES

1. THE ALUMINUM SLIDING GLASS DOOR SYSTEM DESCRIBED HEREIN HAS BEEN DESIGNED AND TESTED IN COMPLIANCE WITH THE 2004 FLORIDA BUILDING CODE, HIGH VELOCITY HURRICANE ZONES, AND MIAMI-DADE COUNTY PROTOCOLS TAS 201, 202, & 203.
2. POSITIVE AND NEGATIVE DESIGN PRESSURES CALCULATED FOR USE WITH THIS DOOR SYSTEM SHALL BE DETERMINED BY OTHERS ON A JOB-SPECIFIC BASIS IN ACCORDANCE WITH THE GOVERNING CODE.
3. ALL SYSTEM DETAILS CONTAINED HEREIN ARE GENERIC AND DO NOT PROVIDE INFORMATION FOR A SPECIFIC SITE. FOR SITE CONDITIONS DIFFERENT FROM THE CONDITIONS DETAILED HEREIN, A LICENSED ENGINEER OR REGISTERED ARCHITECT SHALL PREPARE SITE SPECIFIC DOCUMENTS AND SUBMIT FOR ONE-TIME APPROVAL FOR USE IN CONJUNCTION WITH THIS DOCUMENT.
4. PERMIT HOLDER SHALL VERIFY THE ADEQUECY OF THE EXISTING STRUCTURE TO WITHSTAND SUPERIMPOSED LOADS. WOOD BUCKS INSTALLED BY OTHERS SHALL BE ANCHORED PROPERLY TO TRANSFER LOADS TO THE EXISTING STRUCTURE & SHALL BE REVIEWED BY BLDG OFFICIAL.
5. PANELS GLAZED WITH 9/16" LAMINATED GLASS ARE LARGE MISSILE IMPACT RESISTANT. NO PROTECTION REQUIRED FOR ANY INSTALLATION.
6. DOORS MAY HAVE TWO OR THREE PANELS IN OX, XO, OR OXO CONFIGURATIONS.
7. ALL STEEL IN CONTACT WITH ALUMINUM SHALL BE PAINTED OR PLATED.

GLAZING SCHEDULE

TYPE	NOMINAL THICKNESS	TYPICAL THICKNESS	DESCRIPTION
A	9/16"	.506"	1/4" HS OUTBOARD / 0.100" DUPONT SENTRY-GLAS PLUS® (SGP) PVB / 1/4" HS INBOARD

HARDWARE SCHEDULE

(A) (2) KAWNEER 911-581 STAINLESS STEEL A.R. MS1847 LOCKS WITH 089-410/089-411 STRIKE PACKAGE.

(B) (2) KAWNEER 590-411 STAINLESS STEEL TANDEM CASTER ASSEMBLIES

(C) (2) 1"W X .75"H WEEP SLOTS PER FIXED PANEL - ONE AT EACH END OF FIXED SILL TRACK FILLERS.

(D) 3"W X 3/8"H WEEP SLOTS IN SILL ANTI-BLOWOUT ADAPTER
- (3) FOR OX OR XO CONFIG
- (5) FOR OXO CONFIG

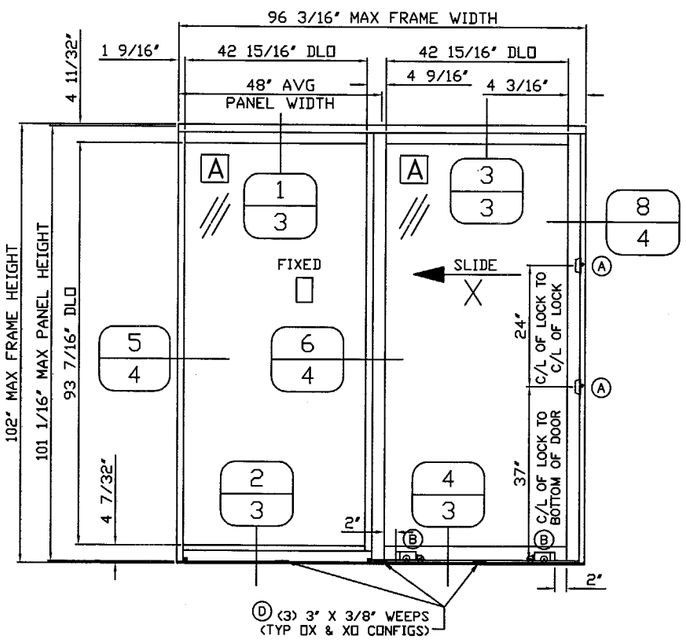

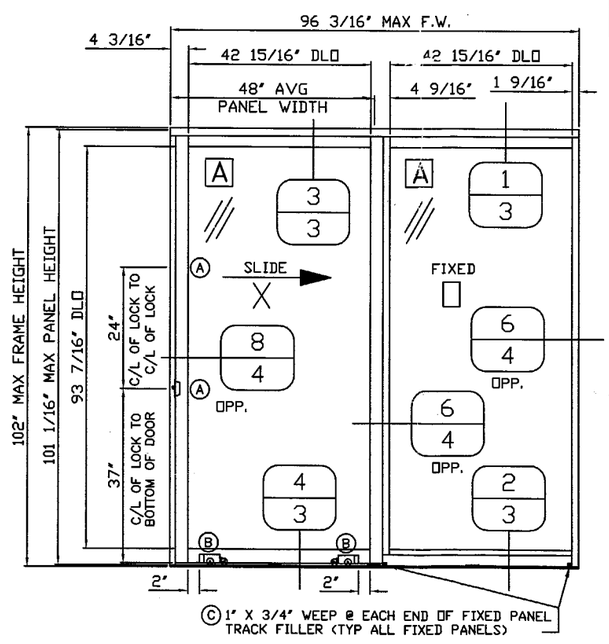

NOV 0 8 2005

CERT. OF AUTH. #9885

FRANK L. BENNARDO, P.E.
#PE0046549

FRANK L. BENNARDO, P.E., Inc
CONSULTING ENGINEERS
4441 NORTH DIXIE HIGHWAY
BOCA RATON, FL 33431
(561) 391-2888 FAX:(561) 391-2862
WWW.FLBENGINEERING.COM
EMAIL: FRANK@FLBENGINEERING.COM

THIS DRAWING IS FOR MIAMI-DADE COUNTY PRODUCT APPROVAL ONLY

PRODUCT REVISED
as complying with the Florida Building Code
Acceptance No 05-0707.02
Expiration Date FEB 24, 2010
By Ishaq I. Chanda
Miami Dade Product Control Division

Kawneer
An Alcoa Company
555 GUTHRIDGE COURT
NORCROSS, GEORGIA 30092
PHONE (770) 449-5555
FAX (770) 734-1560

PRODUCT APPROVAL DRAWINGS
HPX - SLIDING GLASS DOOR
9/16" LAMINATED GLASS
PROTOCOLS-TAS 201/202/203
ASTM E1886/1996, SSTD 12-99

SCALE: ????

DRAWN BY	DATE
DEH	01/30/04

DRWG. NO. T592-802

SHEET 1 of 7

T592-802-001.DWG
03-0938-136

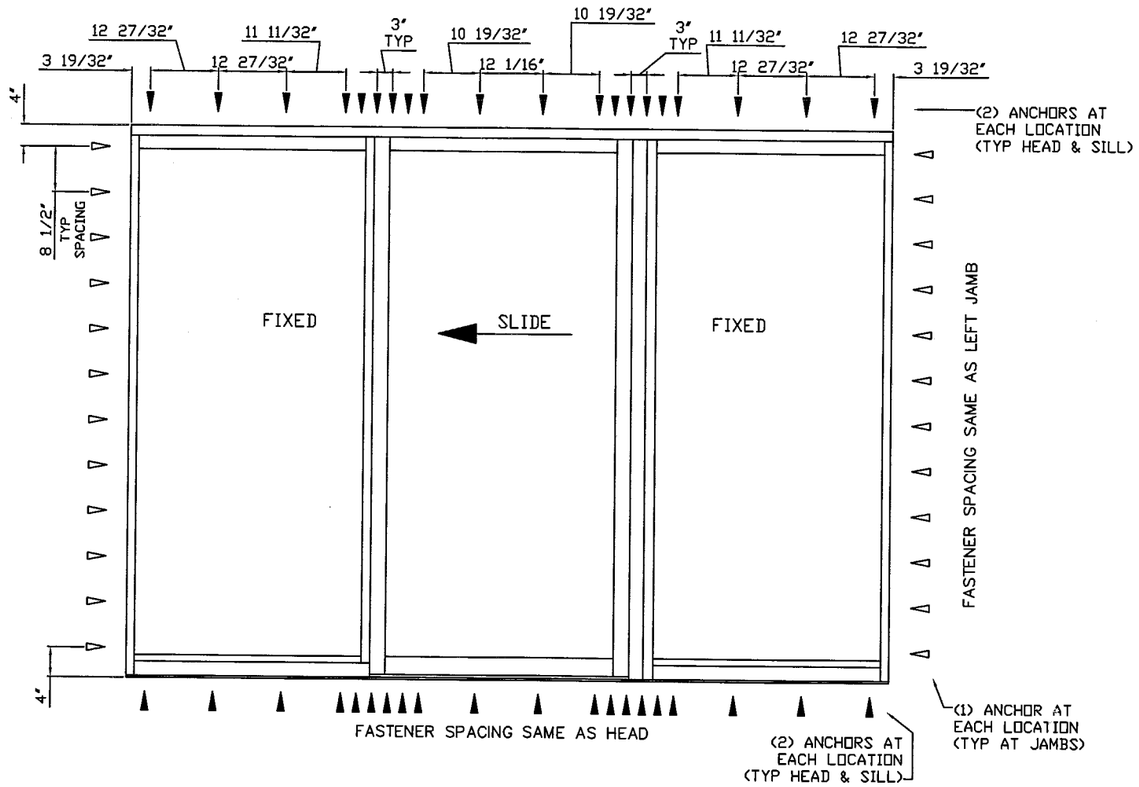

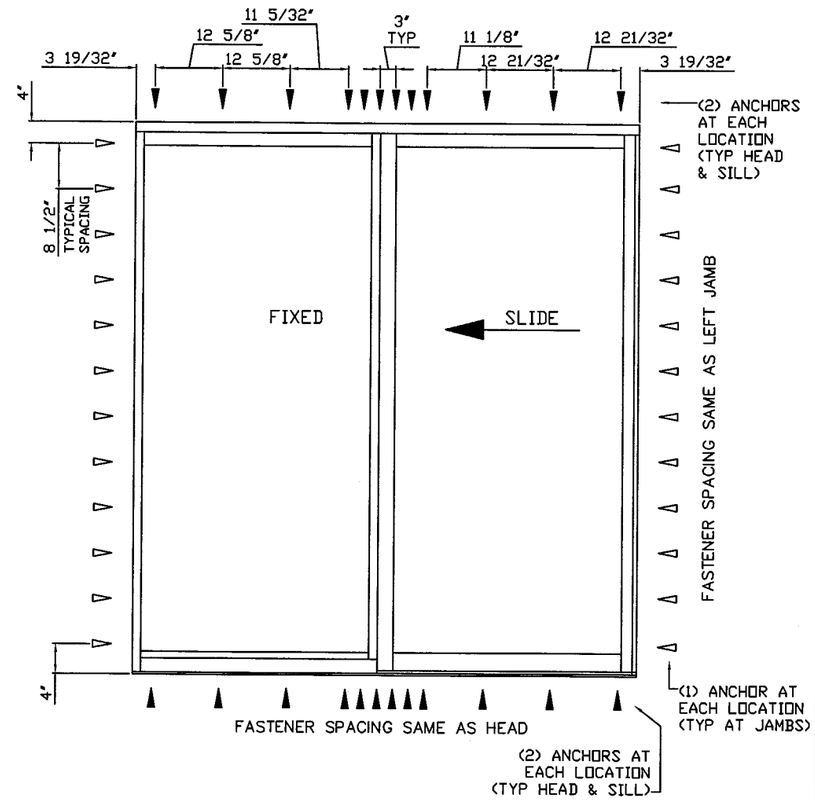

PERIMETER FASTENER LOCATIONS

ALL SUBSTRATES

ANCHOR NOTES:

1. ANCHORS SHALL BE INSTALLED IN ACCORDANCE WITH MANUFACTURER'S RECOMMENDATIONS.
2. ANCHOR EMBEDMENT SHALL BE INTO BASE SUBSTRATE MATERIAL, EXCLUDING SHIM, BUCK, OR STUCCO OR OTHER WALL FINISH.
3. BASE SUBSTRATE MATERIAL SHALL BE CONCRETE BLOCK (ASTM C-90), CONCRETE (MIN 3320psi COMPRESSIVE STRENGTH), WOOD (SOUTHERN PINE W/ G=0.55 OR GREATER SPECIFIC GRAVITY), OR A36 STEEL (1/8" MIN THICKNESS).
4. SEE EXTERIOR ELEVATIONS ABOVE FOR ANCHOR LOCATIONS AND/OR SPACING.
5. ENSURE MINIMUM OF 2-1/2" EDGE DISTANCE FOR ALL ANCHORS INTO CONCRETE BLOCK OR CONCRETE. ENSURE 1" MINIMUM EDGE DISTANCE FOR ALL WOOD ANCHORS.
6. ENSURE 1-1/4" MIN EMBEDMENT TO HOLLOW BLOCK, 1-1/2" MIN EMBEDMENT TO CONCRETE OR TO WOOD, AND FULL THREAD ENGAGEMENT TO 1/8" MIN STEEL SUBSTRATE.
7. INSTALLATION OF WOOD BUCKS (NOT BY KAWNEER) TO HOST STRUCTURE SHALL BE ENGINEERED SEPARATELY AND REVIEWED BY BLDG OFFICIAL.

ALLOWABLE ANCHORS:

HEAD:
- 1/4" ELCO TAPCON TO CONCRETE (WITH OR WITHOUT WOOD BUCK) OR TO WOOD.
- #14 WOOD SCREW TO WOOD.
- #14 SELF-TAPPING METAL SCREW (Fy=92ksi MIN) TO 1/8" MIN STEEL

JAMBS:
- 1/4" ELCO TAPCON TO CONCRETE OR HOLLOW BLOCK (WITH OR WITHOUT WOOD BUCK) OR TO WOOD.
- #14 WOOD SCREW TO WOOD.
- #14 SELF-TAPPING METAL SCREW (Fy=92ksi MIN) TO 1/8" MIN STEEL

SILL:
- 1/4" ELCO TAPCON TO CONCRETE (WITHOUT WOOD BUCK).

LEGEND:
- (2) ANCHORS PER LOCATION INDICATED ABOVE
- (1) ANCHOR PER LOCATION INDICATED ABOVE

CERT. OF AUTH. #9885

NOV 0 8 2005

FRANK L. BENNARDO, P.E.
#PE0046549

REV.	DATE	REQUEST LETTER	BY
0	04/28/04	INIT ISSUE	CL
1	9/15/04	COUNTY COMMENTS	CL
2	6/14/05	2004 FBC	CL

FRANK L. BENNARDO, P.E., Inc.
CONSULTING ENGINEERS
4441 NORTH DIXIE HIGHWAY
BOCA RATON, FL 33431
(561) 391-2888 FAX:(561) 391-2862
WWW.FLBENGINEERING.COM
EMAIL: FRANK@FLBENGINEERING.COM

THIS DRAWING IS FOR MIAMI-DADE COUNTY PRODUCT APPROVAL ONLY

PRODUCT REVISED
as complying with the Florida Building Code
Acceptance No. 05-0707.02
Expiration Date FEB 24, 2010
By Ishag I. Chanda
Miami Dade Product Control Division

Kawneer
An Alcoa Company
555 GUTHRIDGE COURT
NORCROSS, GEORGIA 30092
PHONE (770) 449-5555
FAX (770) 734-1560

PRODUCT APPROVAL DRAWINGS
HPX - SLIDING GLASS DOOR
9/16" LAMINATED GLASS
PROTOCOLS-TAS 201/202/203
ASTM E1886/1996, SSTD 12-99

SCALE: ????

DRAWN BY: DEH
DATE: 01/30/04
DRWG. NO.: T592-802
SHEET: 2 of 7
T592-802-002.DWG
03-0938-136

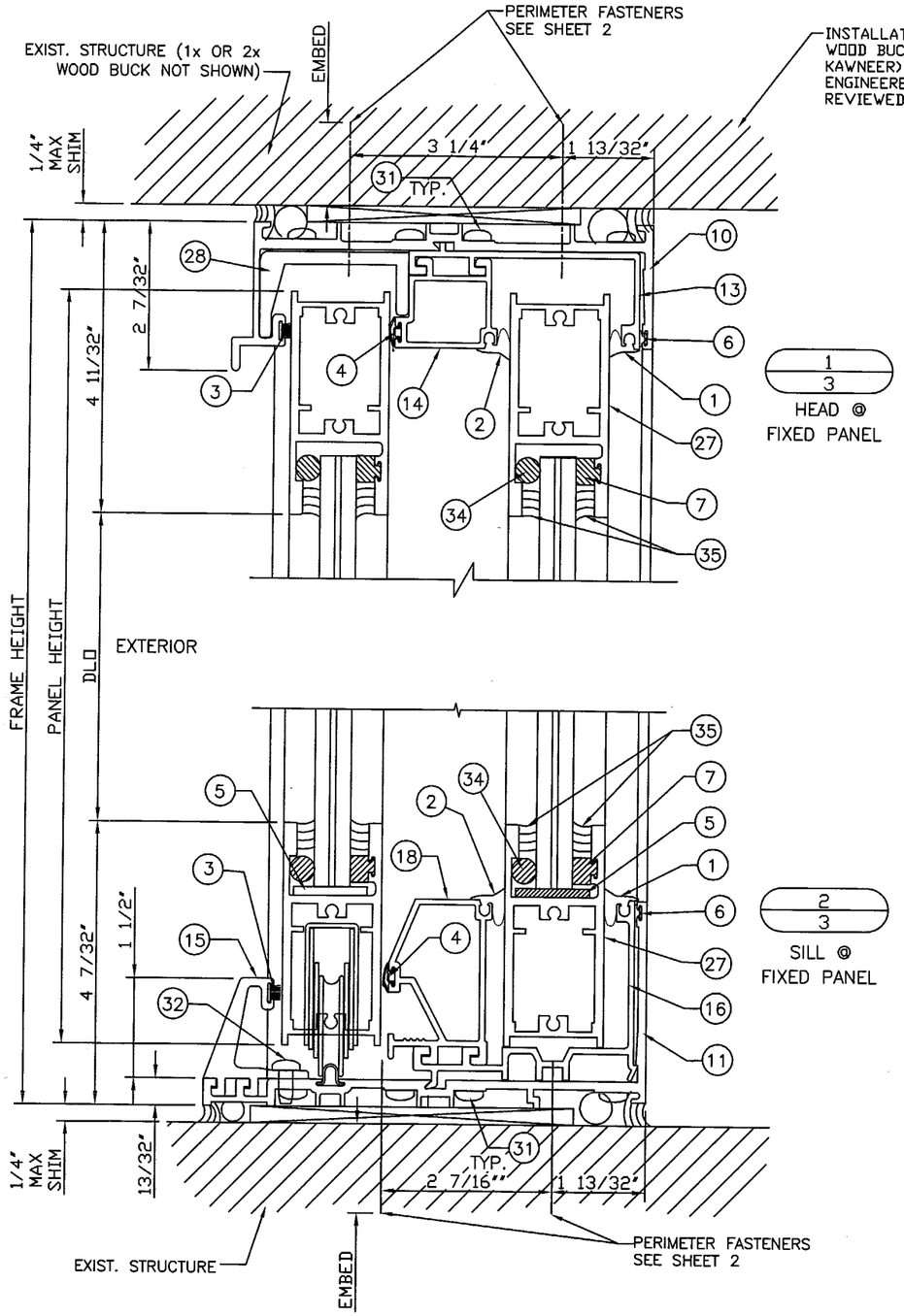

TYPICAL SECTION AT FIXED PANEL

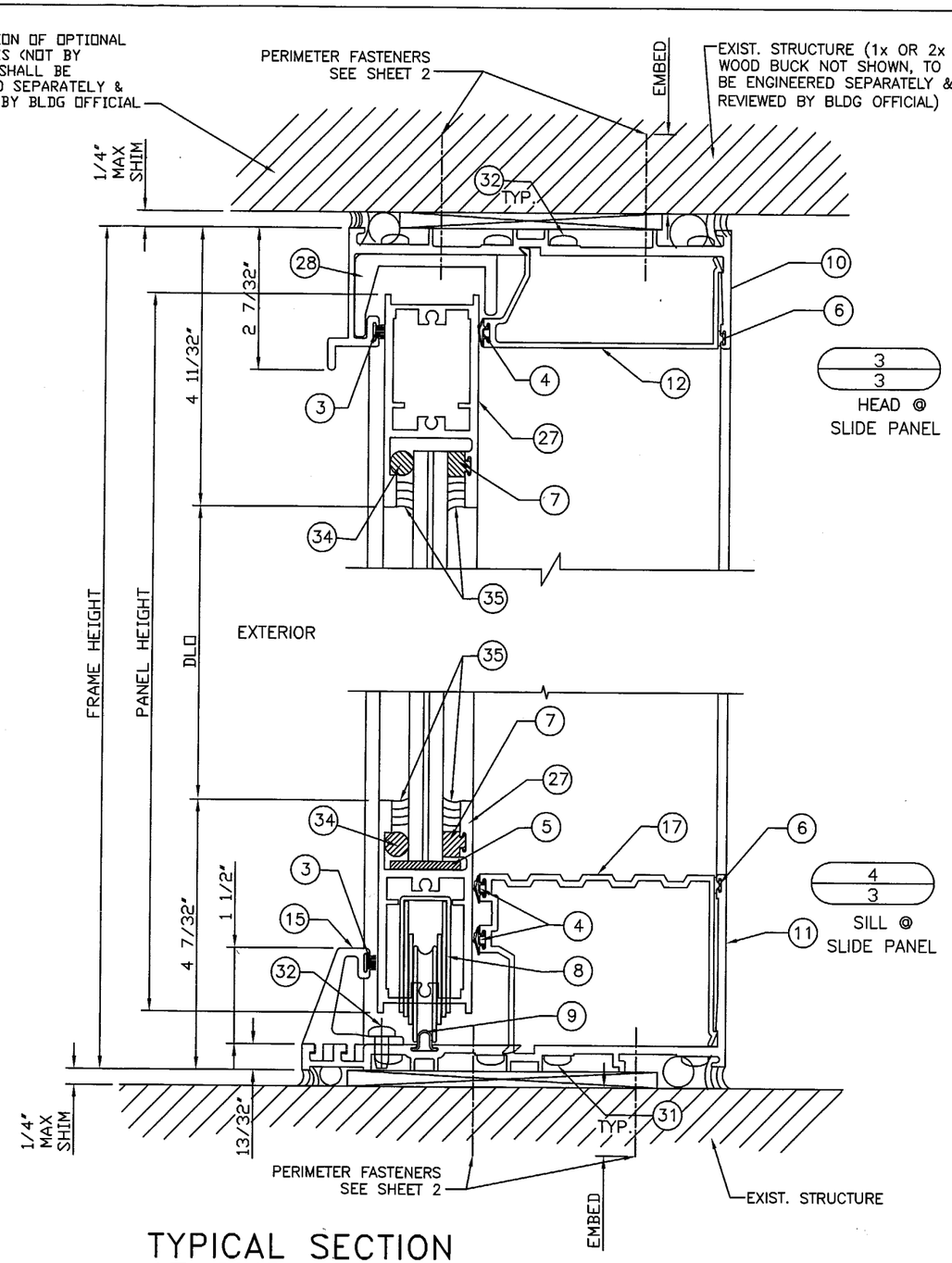

TYPICAL SECTION AT SLIDE PANEL

REFER TO GLAZING DETAIL ON SHEET 6 OF 7 FOR SPECIFIC INFORMATION REGARDING GLAZING MATERIALS AND GLASS BITE

CERT. OF AUTH. #9885

NOV 08 2005

FRANK L. BENNARDO, P.E.
#PE0046549

REV.	DATE	REQUEST LETTER	BY
0	04/28/04	INIT ISSUE	CL
1	9/15/04	COUNTY COMMENTS	CL
2	6/14/05	2004 FBC	CL

FRANK L. BENNARDO, P.E., Inc.
CONSULTING ENGINEERS
4441 NORTH DIXIE HIGHWAY
BOCA RATON, FL 33431
(561) 391-2888 FAX:(561) 391-2862
WWW.FLBENGINEERING.COM
EMAIL: FRANK@FLBENGINEERING.COM

THIS DRAWING IS FOR MIAMI-DADE COUNTY PRODUCT APPROVAL ONLY

PRODUCT REVISED
as complying with the Florida Building Code
Acceptance No 05-0707.02
Expiration Date FEB 24 2010
By Ishwar L. Chandra
Miami Dade Product Control Division

Kawneer
An Alcoa Company
555 GUTHRIDGE COURT
NORCROSS, GEORGIA 30092
PHONE (770) 449-5555
FAX (770) 734-1560

PRODUCT APPROVAL DRAWINGS
HPX - SLIDING GLASS DOOR
9/16" LAMINATED GLASS
PROTOCOLS-TAS 201/202/203
ASTM E1886/1996, SSTD 12-99

SCALE: ????

DRAWN BY: DEH
DATE: 10/30/03
DRWG. NO.: T592-802
SHEET: 3 of 7
T592-802-006.DWG
03-0938-136

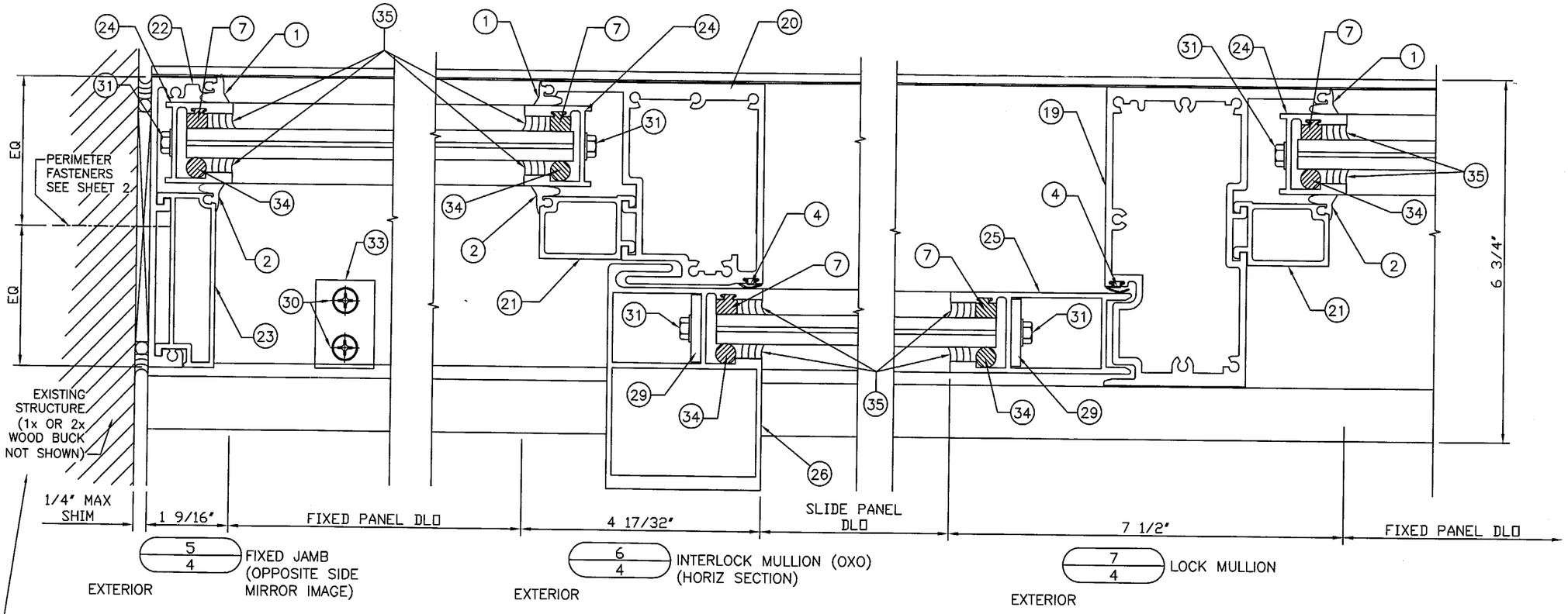

REFER TO GLAZING DETAIL ON SHEET 6 OF 7 FOR SPECIFIC INFORMATION REGARDING GLAZING MATERIALS AND GLASS BITE

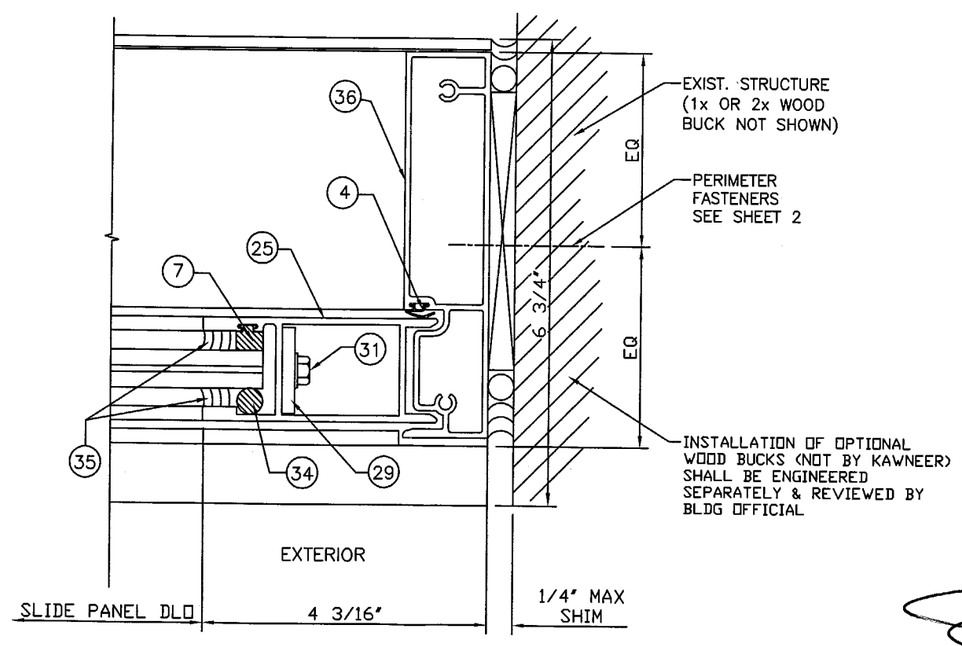

8/4 LOCK JAMB (OX or XO)

CERT. OF AUTH. #9885

NOV 08 2005

FRANK L. BENNARDO, P.E.
#PE0046549

REV.	DATE	REQUEST LETTER	BY
0	04/28/04	INIT ISSUE	CL
1	9/15/04	COUNTY COMMENTS	CL
2	6/14/05	2004 FBC	CL

FRANK L. BENNARDO, P.E., Inc
CONSULTING ENGINEERS
4441 NORTH DIXIE HIGHWAY
BOCA RATON, FL 33431
(561) 391-2888 FAX:(561) 391-2862
WWW.FLBENGINEERING.COM
EMAIL: FRANK@FLBENGINEERING.COM

THIS DRAWING IS FOR MIAMI-DADE COUNTY PRODUCT APPROVAL ONLY

PRODUCT REVISED
as complying with the Florida Building Code
Acceptance No. 05-0707.02
Expiration Date FEB 24, 2010
By Ishay J. Chanda
Miami Dade Product Control Division

Kawneer
An Alcoa Company
555 GUTHRIDGE COURT
NORCROSS, GEORGIA 30092
PHONE (770) 449-5555
FAX (770) 734-1560

PRODUCT APPROVAL DRAWINGS
HPX - SLIDING GLASS DOOR
9/16" LAMINATED GLASS
PROTOCOLS-TAS 201/202/203
ASTM E1886/1996, SSTD 12-99

SCALE: ????

DRAWN BY: DEH
DATE: 10/30/03
DRWG. NO.: T592-802
SHEET: 4 of 7
T592-802-007.DWG
03-0938-136

REV.	DATE	REQUEST LETTER	BY
0	04/28/04	INIT ISSUE	CL
1	9/15/04	COUNTY COMMENTS	CL
2	6/14/05	2004 FBC	CL

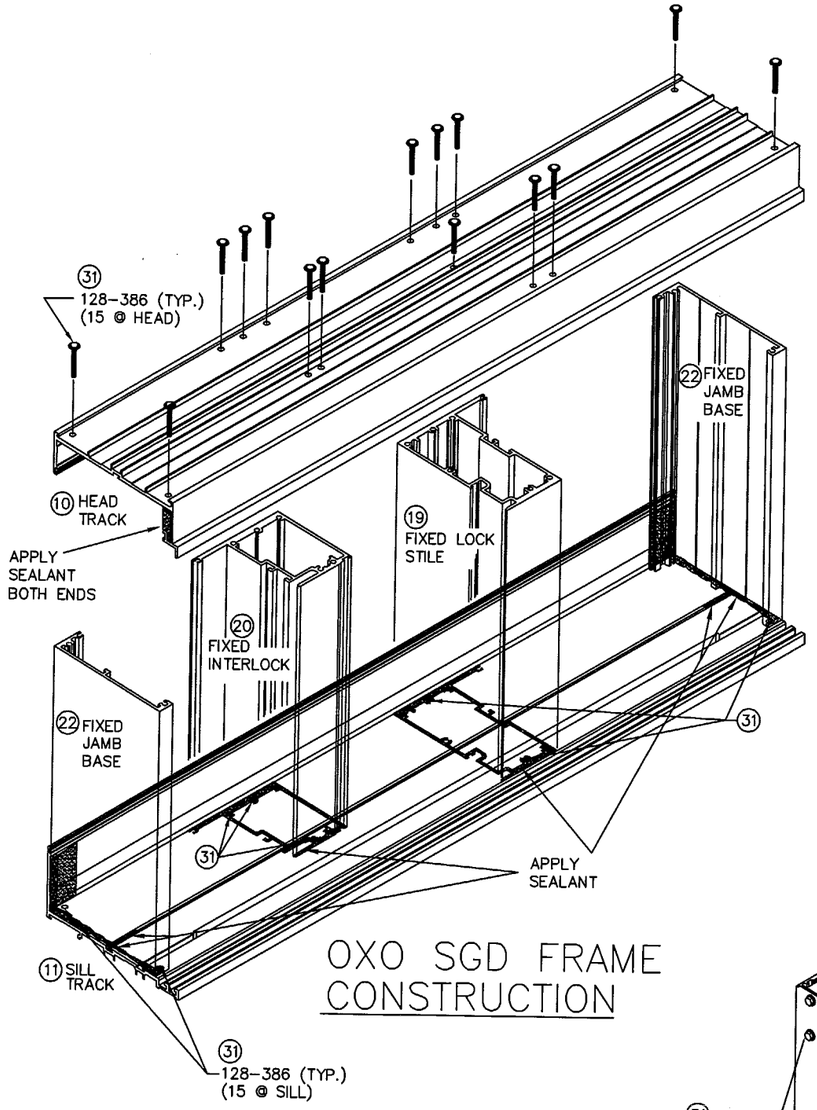

OXO SGD FRAME CONSTRUCTION

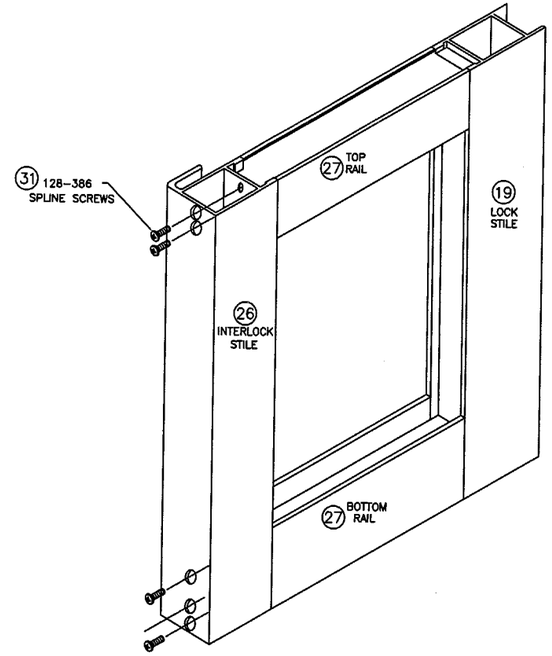

OPERABLE PANEL CONSTRUCTION

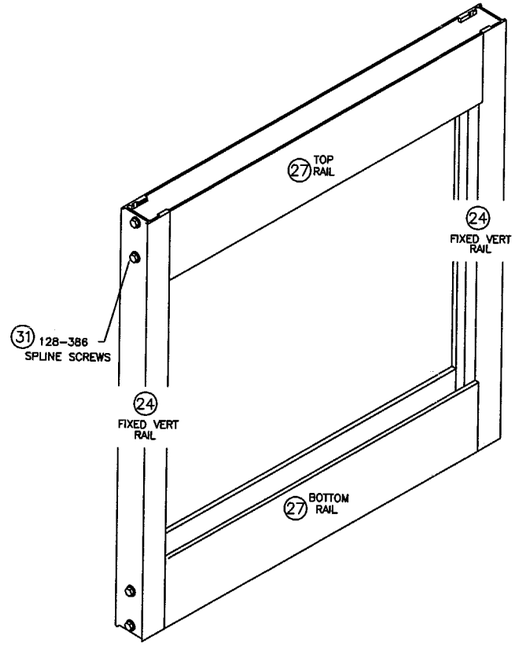

FIXED PANEL CONSTRUCTION

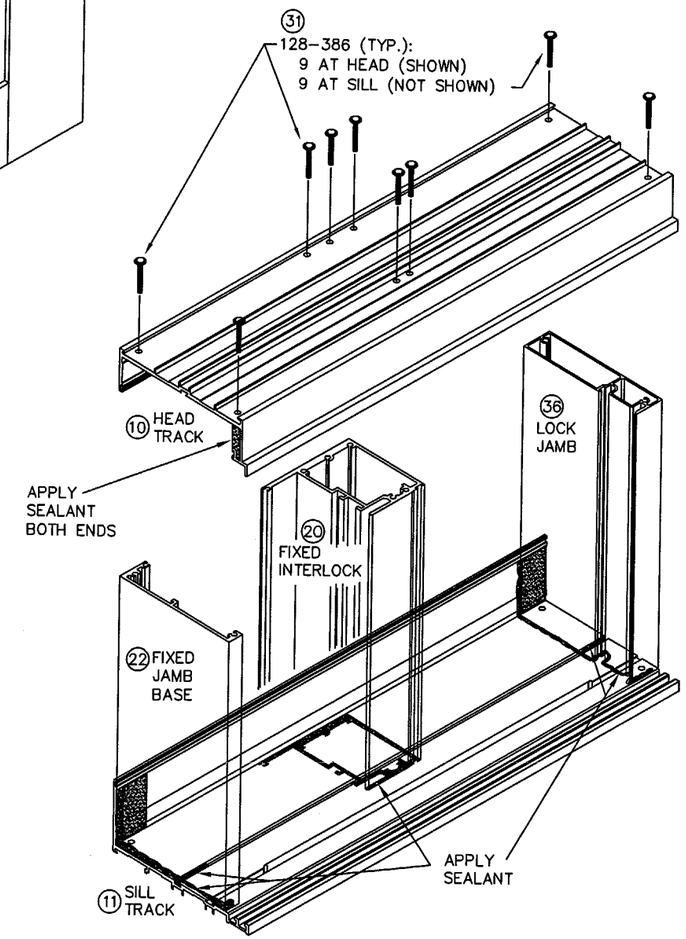

OX, XO SGD FRAME CONSTRUCTION

CERT. OF AUTH. #9885

NOV 08 2005

FRANK L. BENNARDO, P.E.
#PE0046549

FRANK L. BENNARDO, P.E., Inc.
CONSULTING ENGINEERS
4441 NORTH DIXIE HIGHWAY
BOCA RATON, FL 33431
(561) 391-2888 FAX:(561) 391-2862
WWW.FLBENGINEERING.COM
EMAIL: FRANK@FLBENGINEERING.COM

THIS DRAWING IS FOR MIAMI-DADE COUNTY PRODUCT APPROVAL ONLY

PRODUCT REVISED
as complying with the Florida Building Code
Acceptance No 050707.02
Expiration Date FEB 24, 2010
By Ishaq I. Chanda
Miami Dade Product Control Division

Kawneer
An Alcoa Company
555 GUTHRIDGE COURT
NORCROSS, GEORGIA 30092
PHONE (770) 449-5555
FAX (770) 734-1560

PRODUCT APPROVAL DRAWINGS
HPX - SLIDING GLASS DOOR
9/16" LAMINATED GLASS
PROTOCOLS-TAS 201/202/203
ASTM E1886/1996, SSTD 12-99

SCALE: ????

DRAWN BY	DATE
DEH	01/30/04

DRWG. NO. T592-802

SHEET 5 of 7

T592-802-008.DWG
03-0938-136

MATERIAL PARTS LIST

NO.	PART NUMBER	DESCRIPTION	DIMENSIONS (in)	MATERIAL
1	027-074	FIXED GASKET	0.188 SPACE	EPDM 70 DUROMETER
2	027-077	FIXED GASKET	0.188 SPACE	EPDM 70 DUROMETER
3	027-088	PILE WEATHER-STRIP	0.230 SPACE	# PB 9322 POLY BOND
4	027-110	FIXED WEATHER-STRIP	0.125	G E GELOY/DUPONT HYTREL 40 DUROMETER
5	027-423	SETTING BLOCK	0.125 X 1.125 X 4.125	EPDM 90 DUROMETER
6	027-579	BULB WEATHER-STRIP	0.072 SPACE	--
7	127-001	SILICONE SPACER	0.300 X 0.25	TPV 65 DUROMETER
8	590-411	TANDEM CASTER ASSEMBLE	-	300 SERIES STAINLESS STEEL
9	925-393	SILL TRACK INSERT	0.312 X 0.385/0.405 X 0.031	300 SERIES STAINLESS STEEL
10	592-001	HEAD TRACK	2.219 X 6.406 X 0.125	6063-T6 EXTRUDED ALUMINUM
11	592-002	SILL TRACK	3.000 X 6.725 X 0.125	6063-T6 EXTRUDED ALUMINUM
12	592-005	HEAD TRACK CAP	1.563 X 3.718 X 0.078	6063-T6 EXTRUDED ALUMINUM
13	592-007	HEAD TRACK FILLER	1.438 X 3.519 X 0.090	6063-T6 EXTRUDED ALUMINUM
14	592-008	HEAD TRACK FILLER STOP	1.342 X 1.567 X 0.080	6063-T6 EXTRUDED ALUMINUM
15	592-009	SILL ANTI-BLOWOUT ADAPTOR	1.560 X 1.764 X 0.125	6063-T6 EXTRUDED ALUMINUM
16	592-011	SILL TRACK FILLER	2.688 X 3.125 X 0.090	6063-T6 EXTRUDED ALUMINUM
17	592-025	SILL TRACK CAP	2.672 X 3.718 X 0.094	6063-T6 EXTRUDED ALUMINUM
18	592-026	SILL TRACK STOP	2.383 X 1.575 X 0.090	6063-T6 EXTRUDED ALUMINUM
19	592-013	LOCK STILE	4.250 X 5.562 X 0.125	6063-T6 EXTRUDED ALUMINUM
20	592-016	FIXED INTERLOCK	4.250 X 3.750 X 0.125	6063-T6 EXTRUDED ALUMINUM
21	592-022	VERTICAL STOP	1.819 X 1.186 X 0.093	6063-T6 EXTRUDED ALUMINUM
22	592-023	FIXED JAMB BASE	1.250 X 5.398 X 0.125	6063-T6 EXTRUDED ALUMINUM
23	592-024	FIXED JAMB STOP	1.125 X 3.242 X 0.094	6063-T6 EXTRUDED ALUMINUM
24	592-012	FIXED PANEL VERTICAL RAIL	1.273 X 1.500 X 0.094	6063-T6 EXTRUDED ALUMINUM
25	592-014	SLIDE PANEL LOCK STILE	3.437 X 1.500 X 0.094	6063-T6 EXTRUDED ALUMINUM
26	592-017	SLIDE PANEL INTERLOCK STILE	2.937 X 4.188 X 0.094	6063-T6 EXTRUDED ALUMINUM
27	592-018	FIXED/SLIDE TOP AND BOTTOM RAIL	1.500 X 3.312 X 0.094	6063-T6 EXTRUDED ALUMINUM
28	592-405	HEAD TRACK REINFORCEMENT	2.265 X 1.293 X 0.188 X 6.000	6063-T6 EXTRUDED ALUMINUM
29	590-403	REINFORCEMENT PLATE FOR SLIDE PANEL	1.250 X 2.500 X 0.188	A36 STEEL
30	128-271	# 12 X 5/8" PHTFS	-	300 SERIES STAINLESS STEEL
31	128-386	# 12 X 2" HWH THREAD FORMING SCREW	-	300 SERIES STAINLESS STEEL
32	977-108	# 10 X 1/2" PHTFS	-	300 SERIES STAINLESS STEEL
33	911-347	PANEL BUMPER	1.125 X 1.125 X 1.641	EPT 70 DUROMETER
34	-	BACKER ROD	3/8" DIAMETER	CLOSED CELL
35	-	STRUCTURAL SILICONE	VARIES	DOW CORNING 995, TREMCO SPECTRUM 2, OR GE SILPRUF
36	591-009	LOCK JAMB (OX or XO)	1.250 X 5.562 X 0.094	6063-T6 EXTRUDED ALUMINUM

HPX SLIDING DOOR
IMPACT RESISTANT 9/16"
LAMINATED GLASS INFILL

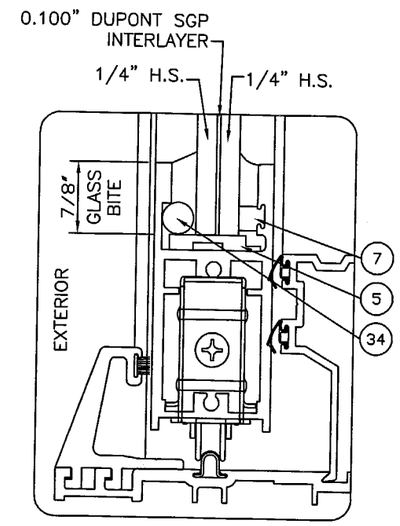

GLASS SIZE = DLO + 1 3/4"
UNLESS OTHERWISE NOTED.

TYP GLAZING DETAIL

NOV 0 8 2005

FRANK L. BENNARDO, P.E.
#PE0046549

CERT. OF AUTH. #9885

REV.	DATE	REQUEST LETTER	BY
0	04/28/04	INIT ISSUE	CL
1	9/15/04	COUNTY COMMENTS	CL
2	6/14/05	2004 FBC	CL

FRANK L. BENNARDO, P.E., Inc
CONSULTING ENGINEERS
4441 NORTH DIXIE HIGHWAY
BOCA RATON, FL 33431
(561) 391-2888 FAX:(561) 391-2862
WWW.FLBENGINEERING.COM
EMAIL: FRANK@FLBENGINEERING.COM

THIS DRAWING IS FOR MIAMI-DADE COUNTY PRODUCT APPROVAL ONLY

PRODUCT REVISED
as complying with the Florida Building Code
Acceptance No. 05-0707.02
Expiration Date FEB 24, 2010
By Isha J. Chanda
Miami Dade Product Control Division

Kawneer
An Alcoa Company
555 GUTHRIDGE COURT
NORCROSS, GEORGIA 30092
PHONE (770) 449-5555
FAX (770) 734-1560

PRODUCT APPROVAL DRAWINGS
HPX - SLIDING GLASS DOOR
9/16" LAMINATED GLASS
PROTOCOLS-TAS 201/202/203
ASTM E1886/1996, SSTD 12-99

SCALE: ????

DRAWN BY: DEH
DATE: 01/30/04
DRWG. NO.: T592-802
SHEET: 6 of 7
T592-802-005.DWG
03-0938-136

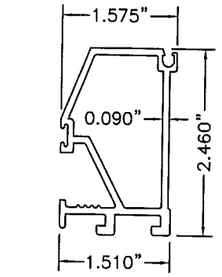

(18) SILL TRACK STOP

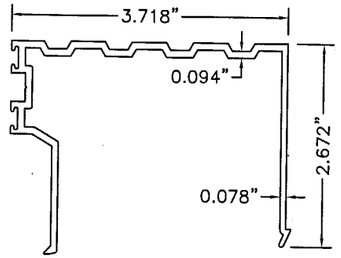

(17) SILL TRACK CAP

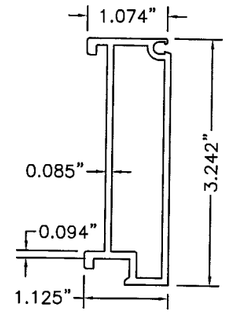

(23) FIXED JAMB STOP

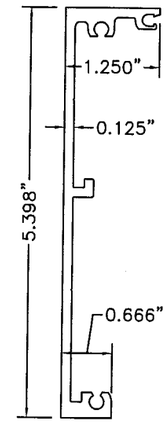

(22) FIXED JAMB BASE

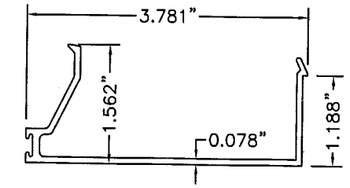

(12) HEAD TRACK CAP

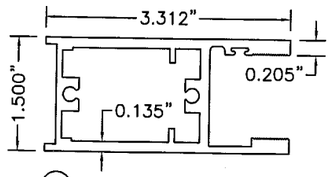

(27) TOP & BOTTOM RAIL

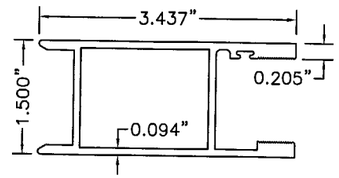

(25) LOCK STILE

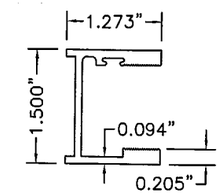

(24) FIXED PANEL VERTICAL RAIL

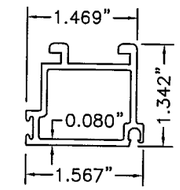

(14) HEAD TRACK FILLER STOP

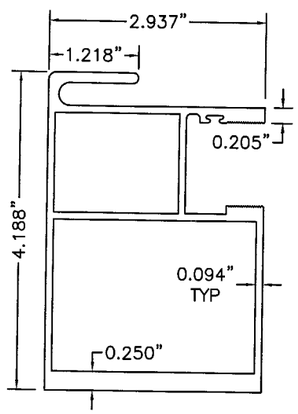

(26) INTERLOCK STILE

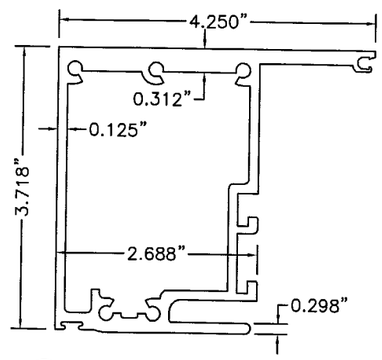

(20) FIXED INTERIOR INTERLOCK

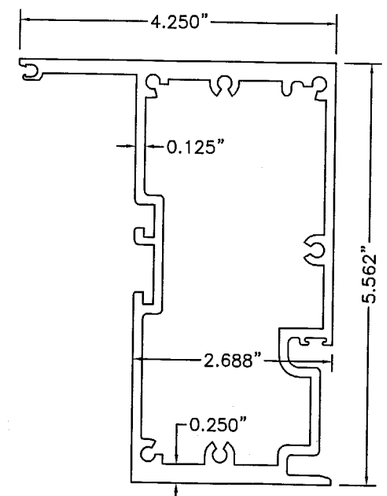

(19) LOCK STILE MULLION

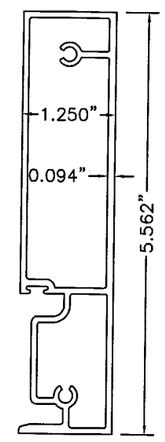

(36) LOCK JAMB (OX or XO)

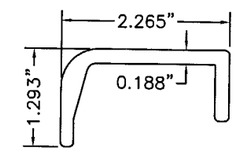

(28) HEAD TRACK REINFORCEMENT

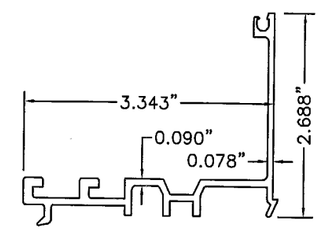

(16) SILL TRACK FILLER

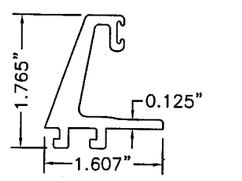

(15) ANTI-BLOWOUT ADAPTOR

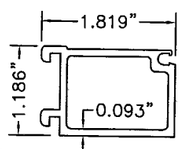

(21) VERTICAL STOP

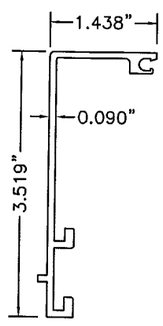

(13) HEAD TRACK FILLER

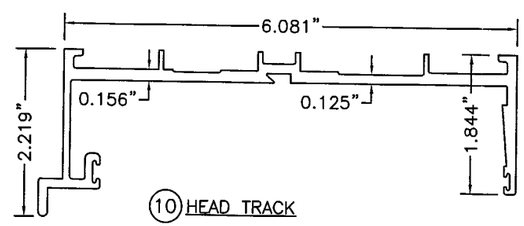

(10) HEAD TRACK

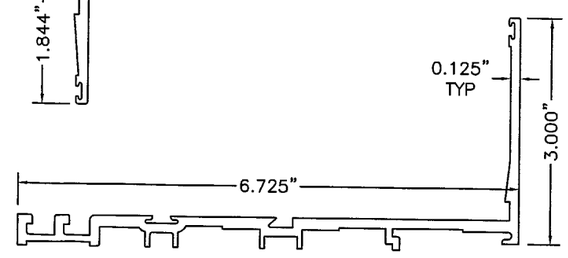

(11) SILL TRACK

CERT. OF AUTH. #9885

NOV 08 2005

FRANK L. BENNARDO, P.E.
#PE0046549

REV.	DATE	REQUEST LETTER	BY
0	04/28/04	INIT ISSUE	CL
1	9/15/04	COUNTY COMMENTS	CL
2	6/14/05	2004 FBC	CL

FRANK L. BENNARDO, P.E., Inc.
CONSULTING ENGINEERS
4441 NORTH DIXIE HIGHWAY
BOCA RATON, FL 33431
(561) 391-2888 FAX: (561) 391-2862
WWW.FLBENGINEERING.COM
EMAIL: FRANK@FLBENGINEERING.COM

THIS DRAWING IS FOR MIAMI-DADE COUNTY PRODUCT APPROVAL ONLY

PRODUCT REVISED
as complying with the Florida Building Code
Acceptance No. 05-0707.02
Expiration Date FEB 24 2010
By Isaac I. Chapel
Miami Dade Product Control Division

Kawneer
An Alcoa Company
555 GUTHRIDGE COURT
NORCROSS, GEORGIA 30092
PHONE (770) 449-5555
FAX (770) 734-1560

PRODUCT APPROVAL DRAWINGS
HPX - SLIDING GLASS DOOR
9/16" LAMINATED GLASS
PROTOCOLS-TAS 201/202/203
ASTM E1886/1996, SSTD 12-99

SCALE: ????

DRAWN BY: DEH
DATE: 01/30/04
DRWG. NO.: T592-802
SHEET: 7 of 7
T592-802-005.DWG
03-0938-136