MIAMI-DADE COUNTY, FLORIDA
METRO-DADE FLAGLER BUILDING

BUILDING CODE COMPLIANCE OFFICE (BCCO)
PRODUCT CONTROL DIVISION

140 WEST FLAGLER STREET, SUITE 1603
MIAMI, FLORIDA 33130-1563
(305) 375-2901 FAX (305) 375-2908
www.buildingcodeonline.com

NOTICE OF ACCEPTANCE (NOA)

Hurst Awning Co. Inc.
6865 NW 36th Avenue
Miami, FL 33147

SCOPE: This NOA is being issued under the applicable rules and regulations governing the use of construction materials. The documentation submitted has been reviewed by Miami-Dade County Product Control Division and accepted by the Board of Rules and Approval (BORA) to be used in Miami Dade County and other areas where allowed by the Authority Having Jurisdiction (AHJ).

This NOA shall not be valid after the expiration date stated below. The Miami-Dade County Product Control Division (In Miami Dade County) and/or the AHJ (in areas other than Miami Dade County) reserve the right to have this product or material tested for quality assurance purposes. If this product or material fails to perform in the accepted manner, the manufacturer will incur the expense of such testing and the AHJ may immediately revoke, modify, or suspend the use of such product or material within their jurisdiction. BORA reserves the right to revoke this acceptance, if it is determined by Miami-Dade County Product Control Division that this product or material fails to meet the requirements of the applicable building code.

This product is approved as described herein and has been designed to comply with the Florida Building Code, including the High Velocity Zone.

DESCRIPTION: Clear Maxi Roll-Up Shutter-LMI

APPROVAL DOCUMENT: Drawing **No. 05-348**, titled "Clear Maxi Roll-Up Shutter", sheets 1 through 9 of 9, dated 6/28/05, prepared by Knezevich & Associates, Inc., signed and sealed by V. J. Knezevich P.E., bearing the Miami-Dade County Product Control Revision Approval stamp with the Notice of Acceptance number and approval date by the Miami-Dade County Product Control Division.

MISSILE IMPACT RATING: Large and Small Missile Impact

LABELING: Each unit shall bear a permanent label with the manufacturer's name or logo, city, state and following statement: "Miami-Dade County Product Control Approved", unless otherwise noted herein.

RENEWAL of this NOA shall be considered after a renewal application has been filed and there has been no change in the applicable building code negatively affecting the performance of this product.

TERMINATION of this NOA will occur after the expiration date or if there has been a revision or change in the materials, use, and/or manufacture of the product or process. Misuse of this NOA as an endorsement of any product, for sales, advertising or any other purposes shall automatically terminate this NOA. Failure to comply with any section of this NOA shall be cause for termination and removal of NOA.

ADVERTISEMENT: The NOA number preceded by the words Miami-Dade County, Florida, and followed by the expiration date may be displayed in advertising literature. If any portion of the NOA is displayed, then it shall be done in its entirety.

INSPECTION: A copy of this entire NOA shall be provided to the user by the manufacturer or its distributors and shall be available for inspection at the job site at the request of the Building Official.

This **revises** NOA **No. 02-0118.01** and consists of this page 1, evidence page E1 and E2, as well as approval document mentioned above.

The submitted documentation was reviewed by **Jaime D. Gascon, P.E.**

PRODUCT CONTROL ACCEPTED

J. Gascon
6/14/06

Hurst Awning Co. Inc.

NOTICE OF ACCEPTANCE: EVIDENCE SUBMITTED

A DRAWING

1. Manufacturer's die drawings and sections.
2. Drawing **No. 05-348**, titled "Clear Maxi Roll-Up Shutter", sheets 1 through 9 of 9, dated 6/28/05, prepared by Knezevich & Associates, Inc., signed and sealed by V. J. Knezevich P.E.

B. TESTS

1. Test report on Uniform Static Air Pressure Test per TAS-202, Large Missile Impact Test per TAS-201 and Cyclic Wind Pressure Test per TAS-203, of "Polycarbonate Roll-Up Shutter", prepared by Construction Testing Corporation, report No. 01-014, dated 07/30/01, signed and sealed by Y. G. Kuri, PE.
   "Submitted under NOA No. 02-0118.01"
2. Test report on 4500 Hr. of Xenon Arc Exposure per ASTM G26 and Tensile Properties per ASTM D638 of "Europe Look B.V. Plastic", prepared by PRI Asphalt Technologies, Inc., report No. ELB-001-02-01, dated 11/15/01, signed and sealed by C. L. Thomas, PE.
   "Submitted under NOA No. 02-0118.01"
3. Test report on Self Ignition Temperature per ASTM D1929, Smoke density per ASTM D2843, Rate of Burning per ASTM D635 of "Europe Look B.V. Maxi Plastic" prepared by ETC Laboratories, Inc, Report No. ETC01-718-10857.0, dated 05/30/01, signed and sealed by J. L. Doldan PE.
   "Submitted under NOA No. 02-0118.01"

C. CALCULATIONS

1. Revised calculations for Maxi Roll-Up Shutter for slats, storm bars, headers, tracks, and anchors, using rational analysis dated 06/20/05, prepared by Knezevich and Associates, Inc., signed and sealed by V. J. Knezevich, PE.

D. QUALITY ASSURANCE

1. Miami-Dade County Product Control Office

E. MATERIAL CERTIFICATIONS

N/A

F. STATEMENTS

1. Letter of Compliance issued by Knezevich & Associates, Inc on 09/10/01, signed by V. J. Knezevich, PE.
   "Submitted under NOA No. 02-0118.01"

Jaime D. Gascon, P.E.
Chief, Product Control Division
NOA No 05-0712.04
Expiration Date: August 22, 2007
Approval Date: July 6, 2006

NOTICE OF ACCEPTANCE: EVIDENCE SUBMITTED

2. Letter of No-financial Interest issued by Knezevich & Associates on 02/13/01, signed by V. J.
Knezevich, PE.
"Submitted under NOA No. 02-0118.01"

G. OTHER

1. Notice of Acceptance No. **02-0118.01**, issued to Hurst Awning Co., Inc., for "Clear Maxi Roll-Up Shutter", dated 08/22/02 and expiring on 08/22/07.

Jaime D. Gascon, P.E.
Chief, Product Control Division
NOA No 05-0712.04
Expiration Date: August 22, 2007
Approval Date: July 6, 2006

Print Information: P:\FL1\Projects\KK5348.00\Drawings\R0-sub\05-348-01.DWG MCantu 06/29/2005 03:16:33pm 06/29/05 15:16

GENERAL NOTES:

1. THESE APPROVAL DOCUMENTS REPRESENT A SHUTTER SYSTEM ANALYZED WITH THE PROVISION SET FOR THE ISSUANCE OF A NOTICE OF ACCEPTANCE (NOA) BY MIAMI-DADE COUNTY PRODUCT CONTROL DIVISION FOR THE HIGH VELOCITY HURRICANE ZONE (HVHZ) OF THE FLORIDA BUILDING CODE 2004.
2. NO INCREASE IN ALLOWABLE STRESS HAS BEEN USED IN THE DESIGN OF THIS PRODUCT. WIND LOAD DURATION FACTOR Cd = 1.6 WAS USED FOR WOOD LAG SCREW DESIGN.
3. DETERMINE THE POSITIVE AND NEGATIVE DESIGN LOADS TO USE WHEN REFERENCING THESE DOCUMENTS IN ACCORDANCE WITH THE GOVERNING CODE AND GOVERNING WIND VELOCITY. FOR WIND LOAD CALCULATIONS IN ACCORDANCE WITH ASCE 7-98, A DIRECTIONALITY FACTOR OF Kd =0.85 SHALL BE USED.
4. THESE APPROVAL DOCUMENTS ARE GENERIC AND DO NOT INCLUDE INFORMATION FOR SITE-SPECIFIC APPLICATION OF THIS SHUTTER SYSTEM.
5. USE OF THESE APPROVAL DOCUMENTS SHALL COMPLY WITH CHAPTER 61G15-23 OF THE FLORIDA ADMINISTRATIVE CODE.
6. THESE APPROVAL DOCUMENTS, ARE SUITABLE TO BE APPLIED BY THE CONTRACTOR PROVIDED THE CONTRACTOR DOES NOT DEVIATE FROM THE CONDITIONS DETAILED HEREIN AND THE CONTRACTOR VERIFIES THAT THE EXISTING STRUCTURE DOES NOT DEVIATE IN EITHER FORM OR MATERIAL FROM THE STRUCTURAL SUBSTRATES DETAILED HEREIN.
7. ANY MODIFICATIONS OR ADDITIONS TO THESE APPROVAL DOCUMENTS WILL VOID THE APPROVAL DOCUMENTS.
8. WHEN THE SITE CONDITIONS DEVIATE FROM THESE APPROVAL DOCUMENTS, THE BUILDING OFFICIAL MAY ELECT ONE OF THE FOLLOWING OPTIONS:
   A) REQUIRE THAT SITE SPECIFIC DOCUMENTS BE PREPARED, SIGNED, DATED AND SEALED BY A LICENSED ENGINEER OR REGISTERED ARCHITECT, WHICH DETAIL AND JUSTIFY THE DEVIATION. SAID DOCUMENTS SHALL BE SUBMITTED TO THE PRODUCT ENGINEER FOR REVIEW AS A CONDITION TO THE BUILDING OFFICIAL GRANTING HIS/HER APPROVAL.
   B) REQUIRE THAT A ONE-TIME SITE SPECIFIC APPROVAL BE APPLIED FOR AND SECURED FROM THE MIAMI-DADE COUNTY PRODUCT CONTROL DIVISION

   WHEN THE SITE CONDITION DEVIATIONS OCCUR WITHIN THE HIGH VELOCITY HURRICANE ZONE AREAS ONLY OPTION "B" SHALL BE ACCEPTED BY THE BUILDING OFFICIAL.
9. ONCE ALL COMPONENTS HAVE BEEN CHOSEN, CHECK FOR COMPLIANCE WITH SECTION 1612.9 OF THE FLORIDA BUILDING CODE.
10. ALL EXTRUSIONS SHALL BE 6063-T6 ALUMINUM ALLOY, U.O.N. SLATS SHALL BE POLYCARBONATE AS MANUFACTURED BY EUROLOOK USA.
11. EACH SHUTTER ASSEMBLY SHALL BE PERMANENTLY LABELED ON HOOD OR GUIDE RAIL AS FOLLOWS:
    HURST AWNING CO.
    MIAMI, FLORIDA
    MIAMI-DADE COUNTY PRODUCT APPROVED
12. ALL SCREWS, BOLTS AND WASHERS SHALL BE 2024-T6 ALUMINUM ALLOY, GALVANIZED OR STAINLESS STEEL WITH A MINIMUM Fy = 33 K.S.I. POP RIVETS SHALL BE 3/16"Ø 5052 ALUMINUM ALLOY.
13. MATERIAL SPECIFICATIONS NOTED HEREIN ARE IDENTICAL TO THE MATERIALS USED IN PRODUCT TESTING.
14. DESIGN CRITERIA FOR MULTIPLE SPANS:
    a. MAXIMUM DEFLECTION OF OUTSIDE HEADERS = L/30
    b. MAXIMUM DEFLECTION OF POSITIVE (INSIDE) STORM BARS = L/30 OR 2"
    c. MAXIMUM DEFLECTION OF NEGATIVE (OUTSIDE) STORM BARS = L/30
    d. MAXIMUM POSITIVE DEFLECTION OF SLATS = L/30 OR 2"; NEGATIVE DEFLECTION OF SLATS = L/30.

INDEX

SHEET No.	DESCRIPTION
1	GENERAL NOTES - COMPONENTS
2	SIDE RAIL CONNECTIONS, SECTIONS & HEADER ASSEMBLY
3	TYPICAL ELEVATIONS & SECTIONS
4	SLAT SPAN SCHED. B-1, B-2 & SEP. FROM GLASS SCHED. B-3
5	HEADER - DRUM SUPPORT DETAILS
6	ANCHOR AND FASTENER SCHEDULES C, D & E
7	NEGATIVE (EXTERIOR) STORM BAR SCHEDULE F
7	POSITIVE (INTERIOR) STORM BAR SCHEDULE G
8	HEADER SCHEDULE H (25 P.S.F. TO 220 P.S.F. DESIGN LOADS)
9	SIDE RAIL (GUIDE) ANCHOR SCHEDULE

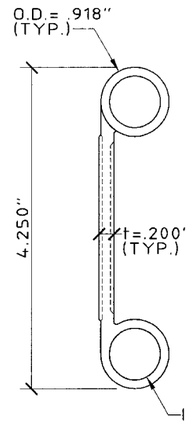

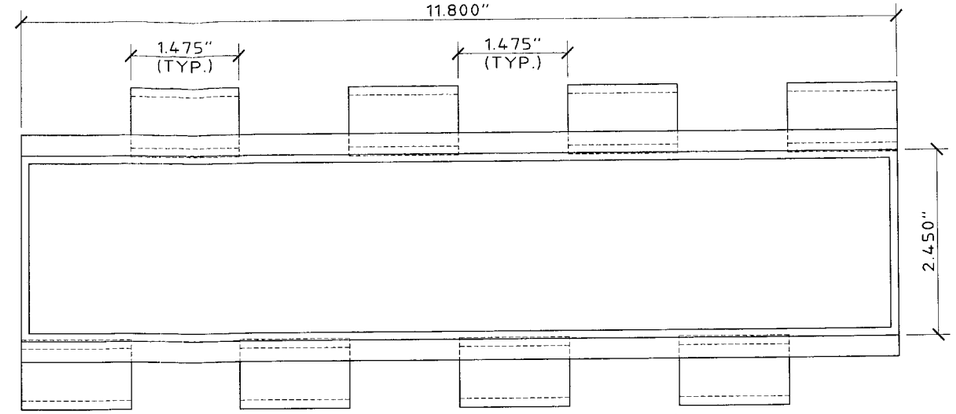

1 **ROLL-UP SLAT (CLEAR POLYCARBONATE)**
SCALE: HALF SIZE

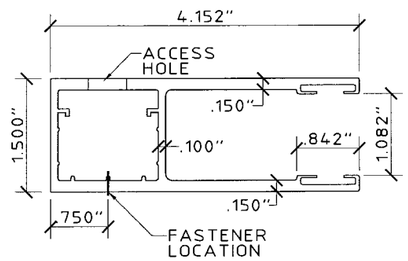

2 **SIDE RAIL**
SCALE: HALF SIZE

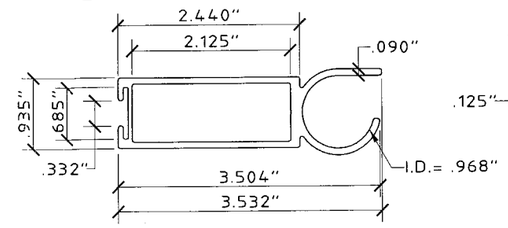

3 **THRESHOLD SLAT**
SCALE: HALF SIZE

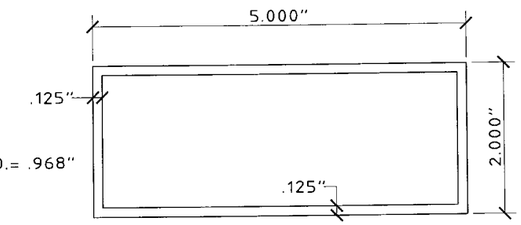

4 **HEADER**
SCALE: HALF SIZE

INSTRUCTIONS:

1. DETERMINE CURRENT A.S.C.E. 7 WIND LOAD ON OPENING TO BE COVERED WITH A ROLL UP SHUTTER.
2. DETERMINE THE SLAT SPAN THAT YOU WILL NEED TO COVER THE OPENING.
3. DETERMINE IF YOU WILL NEED A SINGLE SPAN OR DOUBLE SPAN TO COVER THE OPENING.

SLAT SPANS

1. FOR A SINGLE & DOUBLE SLAT SPAN SCHEDULES, SEE SCHEDULES "B-1" & "B-2" ON PAGE 4. LOCATE THE DESIGN WIND LOAD, AND THEN READ THE ALLOWABLE SLAT SPAN.

STORM BARS

1. FOR DOUBLE SPANS SEE SCHEDULES F & G ON PAGE 7 FOR EXTERIOR & INTERIOR STORM BARS. THE LAST ROW OF EACH DESIGN WIND LOAD INDICATES THE MAXIMUM ALLOWABLE SLAT SPAN UTILIZING THAT OR A LESSER SLAT SPAN, READ SCHEDULE HORIZONTALLY FROM LEFT TO RIGHT, UNTIL YOU FIND A STORM BAR SIZE AND HEIGHT THAT FITS THE OPENING.

STORM BAR CONNECTIONS

1. FOR PROPER CONNECTIONS AT THE TOP AND BOTTOM OF STORM BARS, SEE SCHEDULE "C" OR "D", PAGE 6. EACH STORM BAR SCHEDULE HAS REACTION LOADS INDICATED ON THE SCHEDULE TO THE RIGHT OF THE ALLOWABLE SPAN. TAKE THAT NUMBER AND ENTER SCHEDULE "C" FOR A TENSION CONNECTION OR SCHED. "D" FOR A SHEAR CONNECTION TO DETERMINE THE TYPE AND SIZE OF ANCHOR AS WELL AS THE EMBEDMENT INTO CONCRETE, CONCRETE BLOCK OR WOOD. THIS SCHED. WILL ALSO GIVE YOU THE SIZE AND THICKNESS OF THE ALUMINUM ANGLES TO BE USED AS WELL AS THE TEK SCREW ATTACHMENT OF THE ANGLE TO THE STORM BAR.

HEADERS

1. HEADERS FOR STORM BARS CAN BE FOUND IN SCHEDULE "H" ON PAGE 8. SELECT THE DESIGN WIND LOAD AND ENTER SCHEDULE "H". NOTE THAT THE MAXIMUM ALLOWABLE OPENING HEIGHT IS SHOWN AT THE TOP OF THE SCHEDULE. READ ACROSS FROM LEFT TO RIGHT FROM YOUR DESIGN WIND LOAD UNTIL YOU INTERSECT THE COLUMN THAT SHOWS A HEIGHT EQUAL TO OR GREATER THAN YOUR SELECTED OPENING HEIGHT. SEVERAL STORM BAR SIZES ARE IN THE SCHEDULE. YOU MAY CHOOSE FROM THE COLUMN THAT BEST MEETS YOUR REQUIREMENTS.

HEADER CONNECTIONS

1. CONNECTIONS FOR HEADERS MAY ALSO BE FOUND IN SCHEDULES "C" AND "D" DETERMINE REACTIONS FOR HEADERS IN HEADER REACTION SCHEDULE E, PAGE 6.

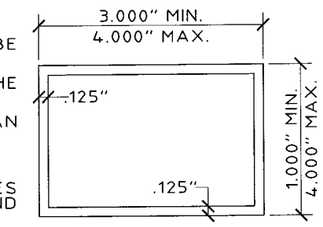

5 **BUILD-OUT**
SCALE: HALF SIZE

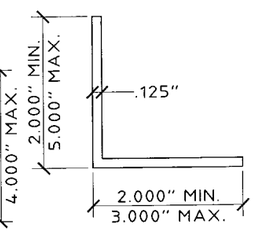

6 **ANGLE**
SCALE: HALF SIZE

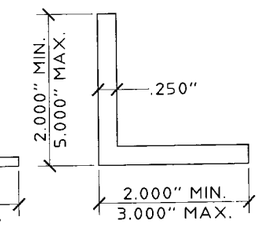

7 **ANGLE**
SCALE: HALF SIZE

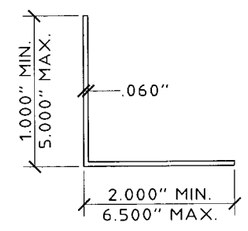

8 **ANGLE**
SCALE: HALF SIZE

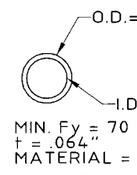

MIN. Fy = 70 ks;
t = .064"
MATERIAL = STEEL

9 **SLAT ROD**
SCALE: HALF SIZE

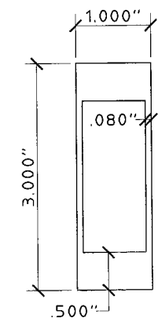

10 **STORM BAR**
SCALE: HALF SIZE

PRODUCT REVISED
to complying with the Florida Building Code
Acceptance No 05-0712.04
Expiration Date 08/22/07
By [illegible]
Miami Dade Product Control Division

Thornton-Tomasetti Group
330 N. Andrews Ave., Suite 450 • Ft. Lauderdale, FL 33301
Tel. (954) 522-3690 • Fax (954) 522-3691 • COA # 7519
Website: www.TheTTGroup.com

Copyright © 2005 Thornton-Tomasetti Group, Inc.

CLIENT: COMPANY NAME

CLEAR MAXI ROLL-UP SHUTTER

Manufacturers of Hurricane & Security Protection Products
6865 N.W. 36th Avenue
Miami, Florida 33147
Phone: (305) 635-0900
Toll Free: (800) 327-0905
Fax: (305) 634-9078
HURST AWNING COMPANY, INC. "QUALITY SERVICE SINCE 1957"

V.J. Knezevich
Professional Engineer
FL License No. PE0010983

JUL 0 8 2005

revisions

no	date	by	description
0	06/28/05	NW	PREVIOUSLY DRAWING NO. 00-327

date 06/28/2005
scale AS NOTED
drawn by MCR
design by VJK
checked by VJK
drawing no. 05-348
sheet 1 of 9

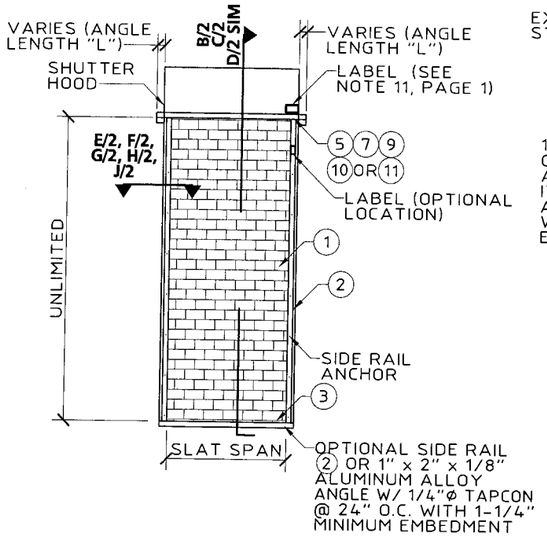

A ELEVATION OF SINGLE SPAN CONDITION
N.T.S.

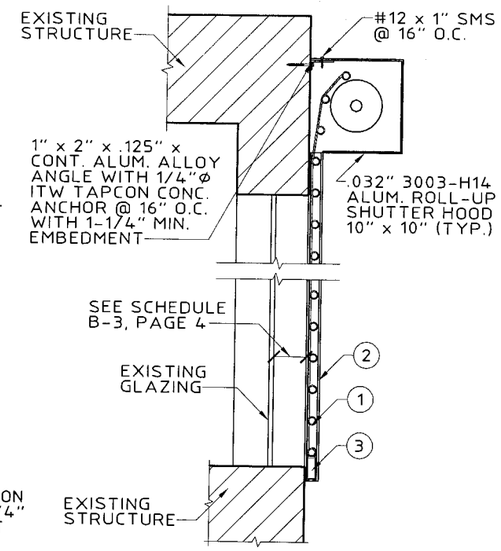

B WALL MOUNT SECTION
SCALE: 3/4" = 1' - 0"

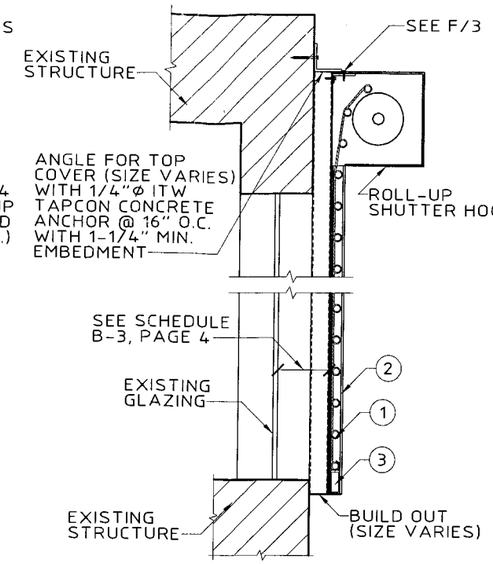

C BUILD OUT SECTION
SCALE: 3/4" = 1' - 0"

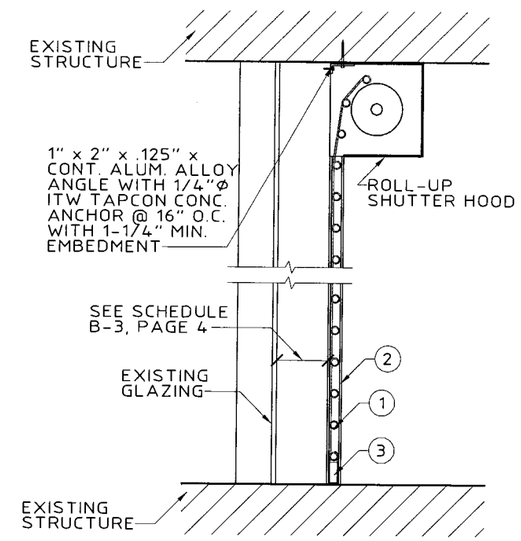

D INSIDE MOUNT SECTION
SCALE: 3/4" = 1' - 0"

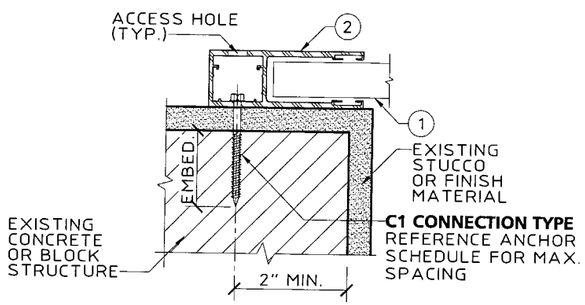

E WALL MOUNT (PLAN)
SCALE : 3" = 1' - 0"

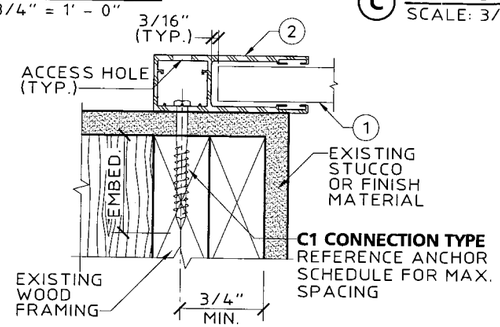

F WOOD FRAME WALL MOUNT (PLAN)
SCALE : 3" = 1' - 0"

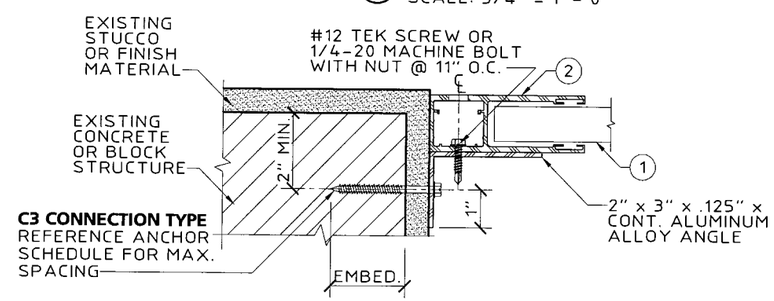

G INSIDE MOUNT (PLAN)
SCALE : 3" = 1' - 0"

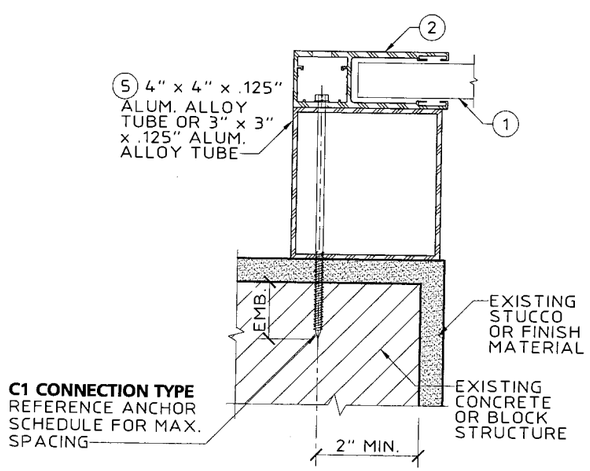

H BUILD-OUT MOUNT (PLAN)
SCALE : 3" = 1' - 0"

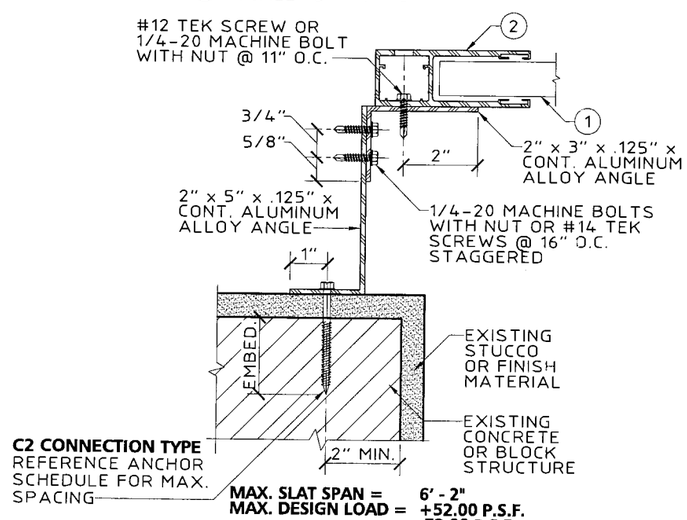

MAX. SLAT SPAN = 6' - 2"
MAX. DESIGN LOAD = +52.00 P.S.F. -72.00 P.S.F.

J BUILD-OUT MOUNT (PLAN)
SCALE : 3" = 1' - 0"

PRODUCT REVISED as complying with the Florida Building Code Acceptance No. 05-0712.04 Expiration Date 08/22/07
By Miami-Dade Product Control Division

Thornton-Tomasetti Group
330 N. Andrews Ave. Suite 450 • Ft. Lauderdale, FL 33301
Tel. (954) 522-3690 • Fax (954) 522-3691 • COA # 7519
Website: www.TheTTGroup.com

Copyright © 2005 Thornton-Tomasetti Group, Inc.
CLIENT: COMPANY NAME

CLEAR MAXI ROLL-UP SHUTTER

Manufacturers of Hurricane & Security Protection Products
6865 N.W. 36th Avenue
Miami, Florida 33147
Phone: (305) 635-0900
Toll Free: (800) 327-0905
Fax: (305) 634-9078
HURST AWNING COMPANY, INC. "QUALITY SERVICE SINCE 1957"

V.J. Knezevich
Professional Engineer
FL License No. PE 0010983

JUL 08 2005

revisions

no	date	by	description
0	06/28/05	NW	PREVIOUSLY DRAWING NO. 06-327

date 06/28/2005
scale AS NOTED
drawn by MCR
design by VJK
checked by VJK
drawing no. 05-348
sheet 2 of 9

Print Information: P:\FL1\Projects\KK5348.00\Drawings\RO-sub\05-348-02.DWG MCantu 06/29/2005 03:14:38pm 06/29/05 15:14

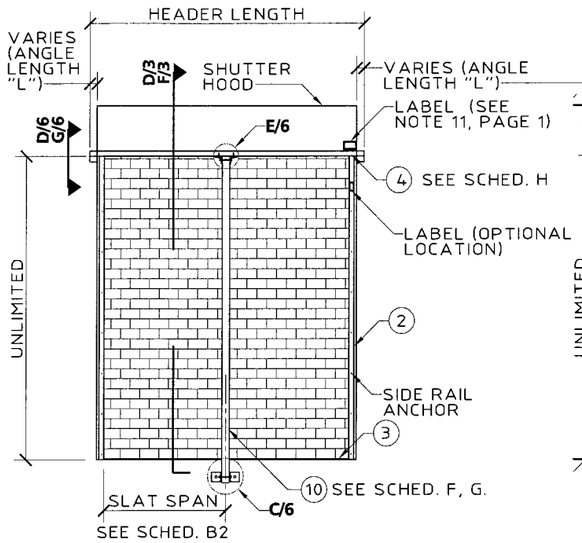

A ELEVATION OF TWO SPAN CONDITION-WALL MOUNT
N.T.S.

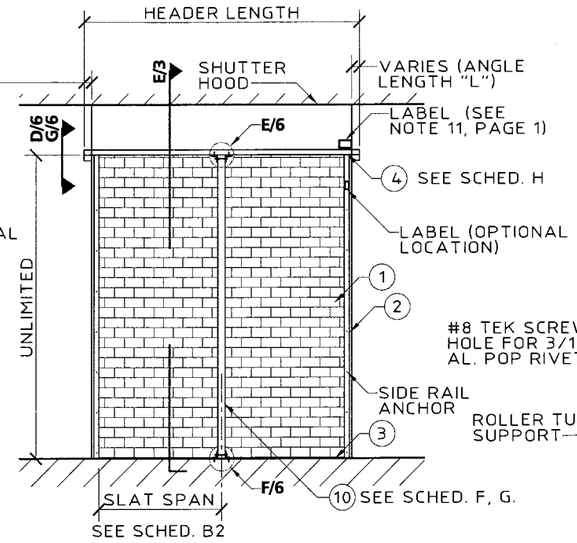

B ELEVATION OF TWO SPAN CONDITION-INSIDE MOUNT
N.T.S.

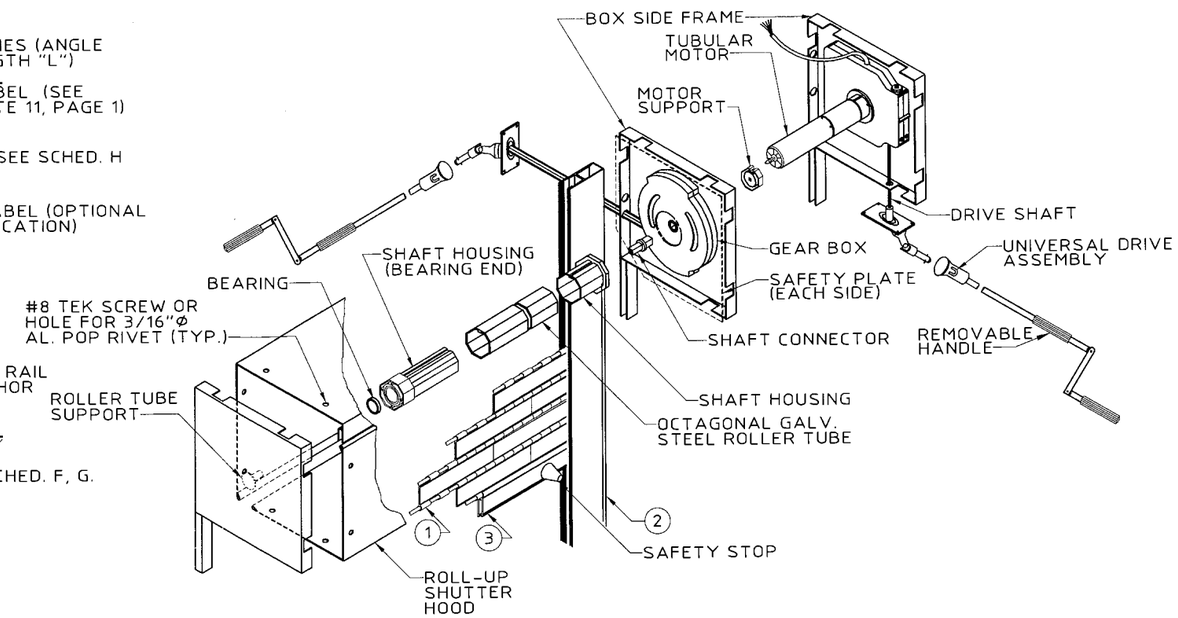

C ISOMETRIC OF CAST HEADER ASSEMBLY
N.T.S.

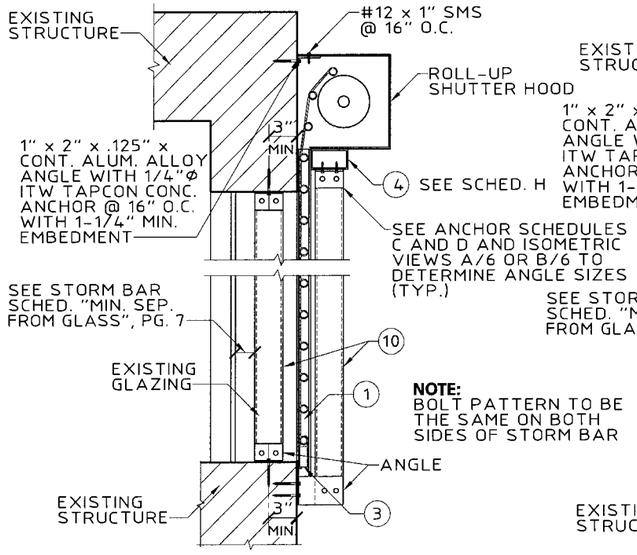

NOTE:
BOLT PATTERN TO BE THE SAME ON BOTH SIDES OF STORM BAR

D WALL MOUNT SECTION WITH STORM BARS
SCALE: 3/4" = 1' - 0"

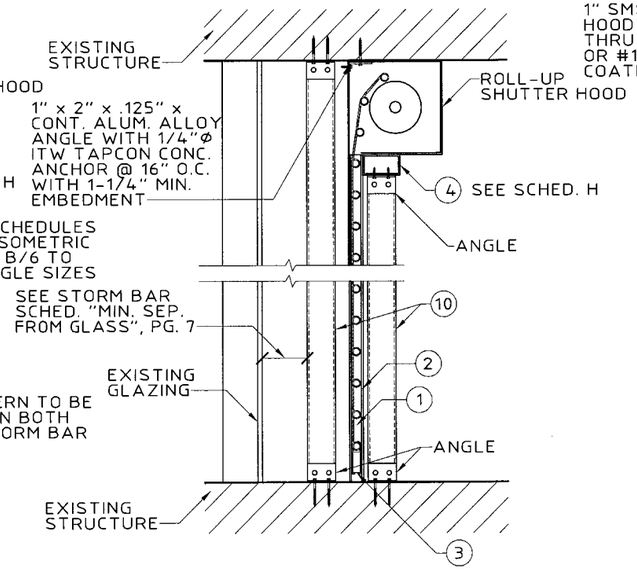

E INSIDE MOUNT SECTION WITH STORM BARS
SCALE: 3/4" = 1' - 0"

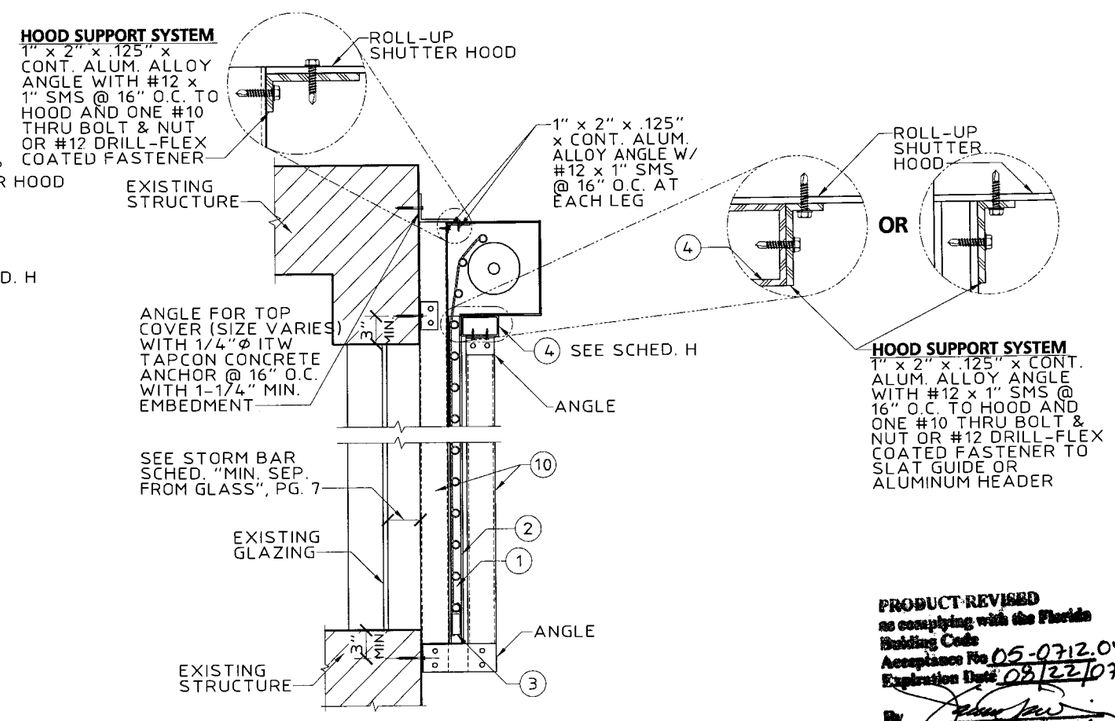

F BUILD-OUT SECTION WITH STORM BARS
SCALE: 3/4" = 1' - 0"

PRODUCT REVISED
as complying with the Florida Building Code
Acceptance No. 05-0712.04
Expiration Date 03/22/07
By
Miami-Dade Product Control Division

Thornton-Tomasetti Group
330 N. Andrews Ave., Suite 450 • Ft. Lauderdale, FL 33301
Tel. (954) 522-3690 • Fax (954) 522-3691 • COA # 7519
Website: www.TheTTGroup.com

Copyright © 2005 Thornton-Tomasetti Group, Inc.
CLIENT: COMPANY NAME

CLEAR MAXI ROLL-UP SHUTTER

Manufacturers of Hurricane & Security Protection Products
6865 N.W. 36th Avenue
Miami, Florida 33147
Phone: (305) 635-0900
Toll Free: (800) 327-0905
Fax: (305) 634-9078
HURST AWNING COMPANY, INC.
"QUALITY SERVICE SINCE 1957"

V.J. Knezevich
Professional Engineer
FL License No.: PE 0010983

JUL 08 2005

revisions			
no	date	by	description
0	06/28/05	NW	PREVIOUSLY DRAWING NO. 00-327

date 06/28/2005	
scale AS NOTED	drawn by MCR
design by VJK	checked by VJK
drawing no. 05-348	
sheet 3 of 9	

Print Information: P:\FL1\Projects\KK5348.00\Drawings\R0-sub\05-348-03.DWG MCantu 06/29/2005 03:14:25pm 06/29/05 15:14

Print Information: P:\FL1\Projects\KK5348.00\Drawings\R0-sub\05-348-04.DWG MCantu 06/29/2005 03:14:10pm 06/29/05 15:14

SINGLE ALLOWABLE SLAT SPAN SCHEDULE B-1

CONTRACTOR / INSTALLER TO UTILIZE SMALLEST OF POSITIVE LOAD SPAN AND NEGATIVE LOAD SPAN FOR EACH OPENING

DESIGN WIND LOAD (P.S.F.)	SPANS FOR POSITIVE LOADS	SPANS FOR NEGATIVE LOADS
	TOTAL SLAT SPAN (FT. - IN.)	TOTAL SLAT SPAN (FT. - IN.)
25.0	6' - 11"	7' - 8"
30.0	6' - 7"	7' - 2"
35.0	6' - 4"	6' - 10"
40.0	6' - 2"	6' - 7"
45.0	6' - 0"	6' - 3"
50.0	5' - 10"	6' - 1"
55.0	5' - 8"	5' - 11"
60.0	5' - 7"	5' - 9"
65.0	5' - 5"	5' - 7"
70.0	5' - 4"	5' - 5"
75.0	5' - 3"	5' - 4"
80.0	5' - 2"	5' - 2"
85.0	5' - 1"	5' - 1"
90.0	5' - 0"	5' - 0"
95.0	4' - 11"	4' - 11"
100.0	4' - 10"	4' - 10"
105.0	4' - 9"	4' - 9"
110.0	4' - 8"	4' - 8"
115.0	4' - 7"	4' - 7"
120.0	4' - 7"	4' - 6"
125.0	4' - 5"	4' - 5"
130.0	4' - 3"	4' - 3"
135.0	4' - 1"	4' - 1"
140.0	3' - 11"	3' - 11"
145.0	3' - 9"	3' - 9"
150.0	3' - 8"	3' - 8"
155.0	3' - 7"	3' - 7"
160.0	3' - 5"	3' - 5"
165.0	3' - 4"	3' - 4"
170.0	3' - 3"	3' - 3"
175.0	3' - 2"	3' - 2"
180.0	3' - 1"	3' - 1"
185.0	3' - 0"	3' - 0"
190.0	2' - 11"	2' - 11"
195.0	2' - 10"	2' - 10"
200.0	2' - 9"	2' - 9"

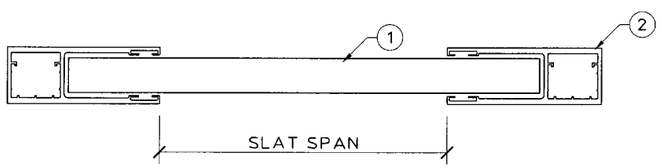

SINGLE SPAN LAYOUT

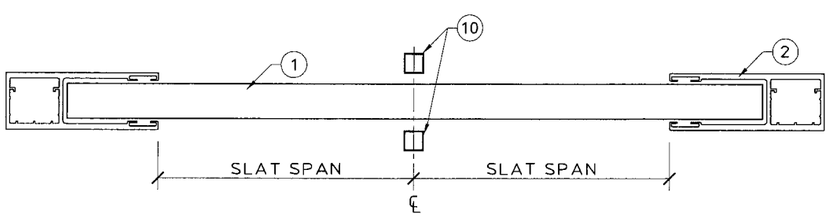

DOUBLE SPAN LAYOUT

DOUBLE ALLOWABLE SLAT SPAN SCHEDULE B-2

CONTRACTOR / INSTALLER TO UTILIZE SMALLEST OF POSITIVE LOAD SPAN AND NEGATIVE LOAD SPAN FOR EACH OPENING

DESIGN WIND LOAD (P.S.F.)	SPANS FOR POSITIVE LOADS	SPANS FOR NEGATIVE LOADS
	TOTAL SLAT SPAN (FT. - IN.)	TOTAL SLAT SPAN (FT. - IN.)
25.0	8' - 7"	10' - 3"
30.0	8' - 2"	9' - 8"
40.0	7' - 7"	8' - 9"
50.0	7' - 2"	8' - 2"
60.0	6' - 11"	7' - 6"
70.0	6' - 7"	6' - 11"
80.0	6' - 5"	6' - 6"
90.0	6' - 2"	6' - 2"
100.0	5' - 10"	5' - 10"
110.0	5' - 6"	5' - 6"
120.0	5' - 4"	5' - 4"
130.0	5' - 1"	5' - 1"
140.0	4' - 11"	4' - 11"
150.0	4' - 9"	4' - 9"
160.0	4' - 7"	4' - 7"
170.0	4' - 4"	4' - 4"
180.0	4' - 1"	4' - 1"
190.0	3' - 10"	3' - 10"
200.0	3' - 8"	3' - 8"
210.0	3' - 6"	3' - 6"
220.0	3' - 4"	3' - 4"

NOTE:

INTERPOLATE FOR SLAT SPANS & DEFLECTION BETWEEN THOSE SHOWN ON THIS SHEET.

MINIMUM SHUTTER SYSTEM SEPARATION FROM GLASS SCHEDULE B-3

POSITIVE DESIGN WIND LOAD (P.S.F.)	ACTUAL SHUTTER SPAN (L) (FT. - IN.)	MINIMUM SEPARATION FOR INSTALLATIONS LESS THAN OR EQUAL TO 30'-0" ABOVE GRADE (INCHES)	MINIMUM SEPARATION FOR INSTALLATIONS GREATER THAN 30'-0" ABOVE GRADE (INCHES)
25.0	3' - 0"	3-1/2"	1-1/8"
	4' - 0"	3-1/2"	1-1/4"
	5' - 0"	3-1/2"	1-1/2"
	6' - 2"	3-1/2"	2-1/4"
	8' - 7"	5-5/8"	5-5/8"
30.0	3' - 0"	3-1/2"	1-1/8"
	4' - 1"	3-1/2"	1-1/4"
	5' - 0"	3-3/4"	1-5/8"
	6' - 2"	3-3/4"	2-1/2"
	6' - 7"	5"	2-7/8"
40.0	3' - 0"	3-1/2"	1-1/8"
	4' - 1"	3-1/2"	1-3/8"
	5' - 0"	3-3/4"	1-7/8"
	6' - 2"	3-3/4"	3"
50.0	3' - 0"	3-1/2"	1-1/8"
	4' - 1"	3-1/2"	1-1/2"
	5' - 0"	3-3/4"	2-1/8"
	5' - 10"	3-3/4"	3"
60.0	3' - 0"	3-1/2"	1-1/8"
	4' - 1"	3-1/2"	1-5/8"
	5' - 0"	3-3/4"	2-1/4"
	5' - 7"	3-3/4"	3"
70.0	3' - 0"	3-1/2"	1-1/4"
	4' - 1"	3-1/2"	1-5/8"
	5' - 0"	3-3/4"	2-1/2"
	5' - 4"	3-3/4"	2-7/8"
80.0	3' - 0"	3-1/2"	1-1/4"
	4' - 1"	3-1/2"	1-3/4"
	5' - 0"	3-3/4"	2-3/4"
	5' - 2"	3-3/4"	3"
90.0	3' - 0"	3-1/2"	1-1/4"
	4' - 1"	3-1/2"	1-7/8"
	5' - 0"	3-3/4"	2-7/8"
100.0	3' - 0"	3-1/2"	1-1/4"
	4' - 1"	3-1/2"	2"
	4' - 10"	3-3/4"	2-7/8"
110.0	3' - 0"	3-1/2"	1-1/4"
	4' - 1"	3-1/2"	2"
	4' - 8"	3-3/4"	2-3/4"

PRODUCT REVIEWED as complying with the Florida Building Code
Acceptance No. 05-0712.04
Expiration Date 08/22/07
By
Miami-Dade Product Control Division

Thornton Tomasetti Group
330 N. Andrews Ave., Suite 450 • Ft. Lauderdale, FL 33301
Tel. (954) 522-3690 • Fax (954) 522-3691 • COA # 7519
Website: www.TheTTGroup.com

Copyright © 2005 Thornton-Tomasetti Group, Inc.
CLIENT: COMPANY NAME

CLEAR MAXI ROLL-UP SHUTTER

Manufacturers of Hurricane & Security Protection Products
6865 N.W. 36th Avenue
Miami, Florida 33147
Phone: (305) 635-0900
Toll Free: (800) 327-0905
Fax: (305) 634-9078
HURST AWNING COMPANY, INC.
"QUALITY SERVICE SINCE 1957"

V.J. Knezevich
Professional Engineer
FL License No.: PE 0010983

JUL 08 2005

revisions

no	date	by	description
0	06/28/05	NW	PREVIOUSLY DRAWING NO. 00-327

date 06/28/2005
scale AS NOTED
drawn by MCR
design by VJK
checked by VJK
drawing no. 05-348
sheet 4 of 9

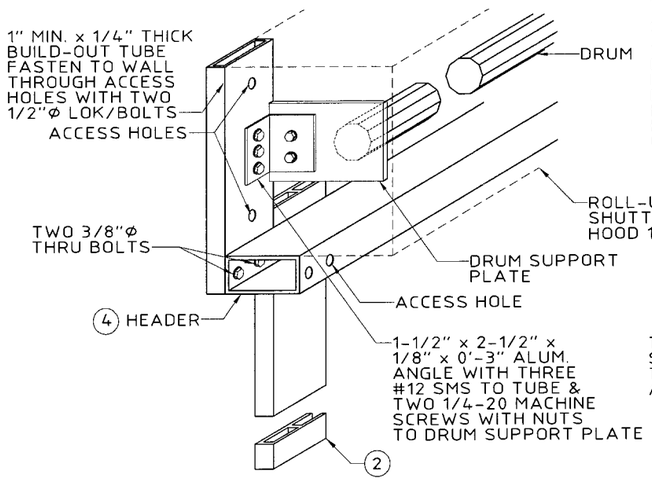

A DRUM SUPPORT & HEADER TO BUILD-OUT DETAIL
SCALE: 1-1/2" = 1' - 0"

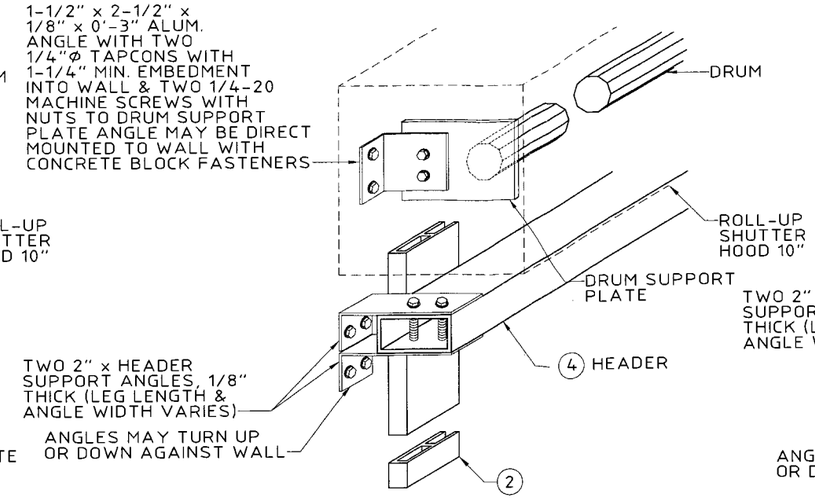

B ALT. DRUM SUPPORT & HEADER TO WALL DETAIL
SCALE: 1-1/2" = 1' - 0"

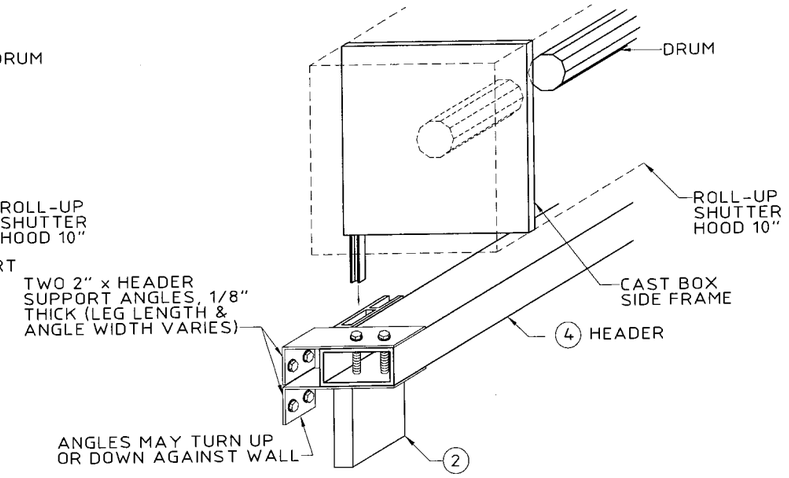

C CAST DRUM SUPPORT & HEADER DETAIL
SCALE: 1-1/2" = 1' - 0"

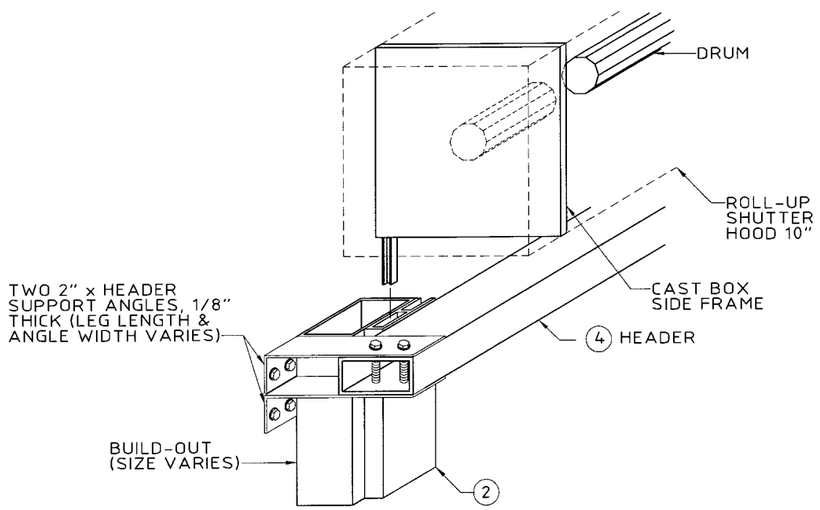

D CAST DRUM SUPPORT & HEADER DETAIL WITH BUILD-OUT
SCALE: 1-1/2" = 1' - 0"

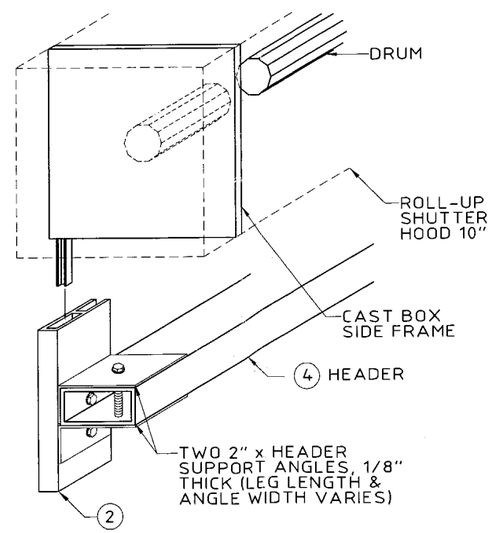

E HEADER SUPPORT ON ANGLE ATTACHED TO GUIDE
SCALE: 1-1/2" = 1' - 0"

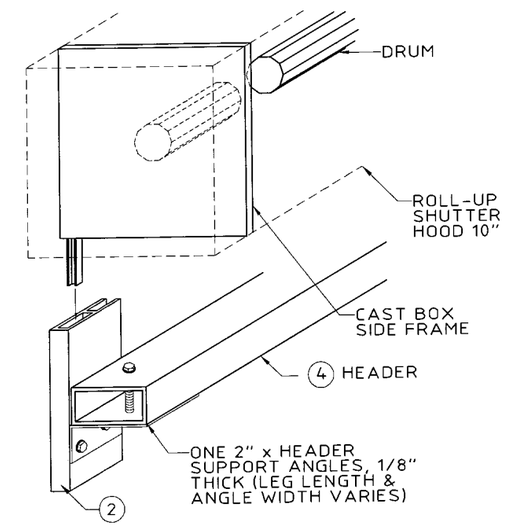

F HEADER SUPPORT ON ANGLE ATTACHED TO GUIDE
SCALE: 1-1/2" = 1' - 0"

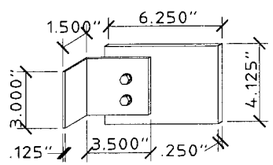

G DRUM SUPPORT PLATE DETAIL
SCALE: 1-1/2" = 1' - 0"

PRODUCT REVISED
as complying with the Florida Building Code
Acceptance No 05-0712.04
Expiration Date 08/22/07
By
Miami-Dade Product Control Division

Thornton-Tomasetti Group
330 N. Andrews Ave., Suite 450 • Ft. Lauderdale, FL 33301
Tel. (954) 522-3690 • Fax (954) 522-3691 • COA # 7519
Website: www.TheTTGroup.com

Copyright © 2005 Thornton-Tomasetti Group, Inc.
CLIENT: COMPANY NAME

CLEAR MAXI ROLL-UP SHUTTER

Manufacturers of Hurricane & Security Protection Products
6865 N.W. 36th Avenue
Miami, Florida 33147
Phone: (305) 635-0900
Toll Free: (800) 327-0905
Fax: (305) 634-9078
HURST AWNING COMPANY, INC.
"QUALITY SERVICE SINCE 1957"

V.J. Knezevich
Professional Engineer
FL License No.: PE 0010983

JUL 08 2005

revisions

no	date	by	description
0	06/28/05	MW	PREVIOUSLY DRAWING NO. 00-327

date 06/28/2005
scale AS NOTED
drawn by MCR
design by VJK
checked by VJK
drawing no. 05-348
sheet 5 of 9

Print Information: P:\FL1\Projects\KK5348.00\Drawings\R0-sub\05-348-05.DWG MCantu 06/29/2005 03:13:58pm 06/29/05 15:13

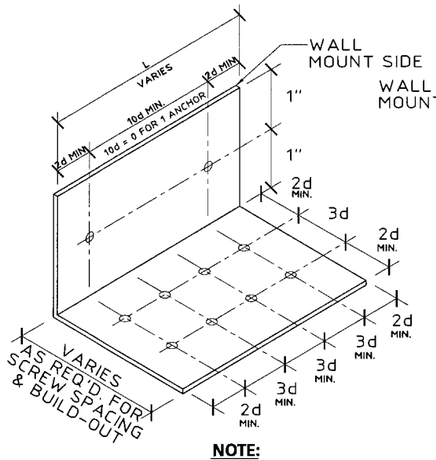

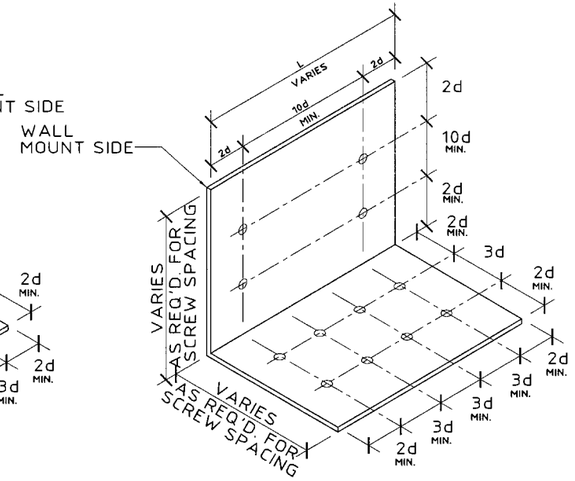

NOTE:

ANGLE ISOMETRIC DEPICTS MAXIMUM NUMBER OF ANCHOR BOLTS AND TEK SCREWS, AND THEIR ARRANGEMENT. FOR LESS ANCHORS OR TEK SCREWS, ANY 3d OR 10d DIMENSIONS MAY BE = 0.

(A) TENSION CONNECTION TO WALL FOR STORM BAR OR HEADER.
N.T.S.

(B) SHEAR CONNECTION TO FLOOR OR CEILING FOR STORM BAR OR HEADER
N.T.S.

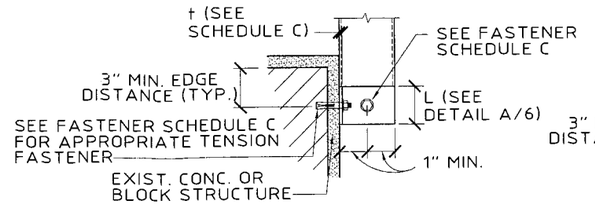

(C) STORM BAR TO WALL SECTION
SCALE: 1-1/2" = 1' - 0"

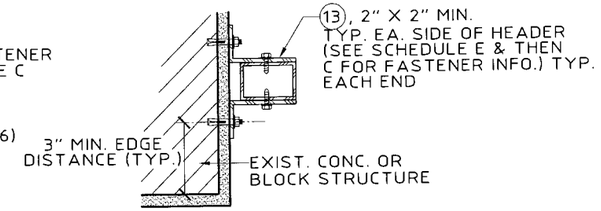

(D) HEADER TO WALL SECTION
SCALE: 1-1/2" = 1' - 0"

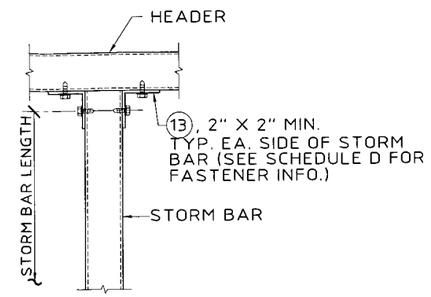

(E) HEADER TO STORM BAR DETAIL
SCALE: 1-1/2" = 1' - 0"

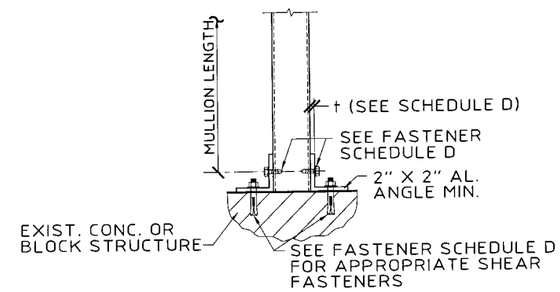

(F) STORM BAR TO FLOOR / CEILING DETAIL
SCALE: 1-1/2" = 1' - 0"

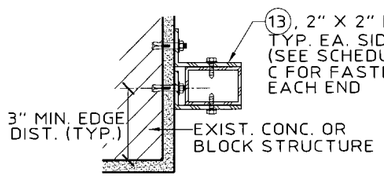

(G) HEADER TO WALL SECTION
SCALE: 1-1/2" = 1' - 0"

NUMBER OF STORM BARS	HEADER REACTION DETERMINATION SCHEDULE E HEADER REACTION EACH END (LBS.)
1	5 X ONE STORM BAR END REACTION
2	1 X ONE STORM BAR END REACTION
3 OR MORE	1.5 X ONE STORM BAR END REACTION

WOOD FASTENING NOTES:

GALVANIZED STEEL OR 410 STAINLESS STEEL WITH FLUOROCARBON COATING LAG SCREW FOR WOOD, MAY BE USED AT LOADS, QUANTITY AND EMBEDMENT INDICATED FOR BLOCK OR CONCRETE. EMBEDMENT SHALL BE AT THE CENTER OF A PRIMARY FRAMING MATERIAL SUCH AS A 2x WOOD STUD OR A 2x WOOD HEADER OR SILL PLATE. SEE SCHEDULES C & D FOR ANGLE, ANCHOR, FASTENER QUANTITY AND SIZE.

ANCHOR AND FASTENER - SCHEDULE C (FOR TENSION CONNECTION) (DETAILS (C), (D) & (G))

Block = B
Concrete = C
2000 P.S.I.

POWERS/RAWL LOK/BOLT - TENSION IN CONCRETE OR BLOCK
POWERS/RAWL CALK-IN - TENSION IN CONCRETE OR BLOCK

ANCHOR TYPE	MATERIAL TYPE	STORM BAR REACTION (LBS.)	WALL MOUNT				ANGLE DIMENSIONS		STORM BAR OR HEADER TO ANGLES	
			DIAMETER (IN.)	EMBEDMENT DISTANCE (IN.)	QUANTITY OF FASTENERS PER ANGLE	CONCRETE OR BLOCK EDGE DISTANCE (IN.)	THICKNESS OF TWO (2) ANGLES (IN.)	MIN. (L) LENGTH OF EACH ANGLE (IN.)	No. OF TEK SCREWS EA. LEG EACH ANGLE	SIZE OF TEK SCREWS
LOK/BOLT	B	600	1/4	1-1/8	1	3	1/8	5.76	2	#12
LOK/BOLT	B	850	3/8	1-1/2	1	4-1/2	1/8	8.16	2	#12
CALK-IN	B	1140	3/8	1-1/4	1	4-1/2	1/8	10.90	2	#12
CALK-IN	B	1140	3/8	1-1/4	1	4-1/2	1/4	2.74	2	#12
LOK/BOLT	B	1700	3/8	1-1/2	2	4-1/2	1/4	5.25	3	#12
LOK/BOLT	C	2200	3/8	1-5/8	2	4-1/2	1/4	5.28	4	#12
CALK-IN	C	3040	1/2	1-1/2	1	6	1/4	7.30	4	#14

ANCHOR AND FASTENER - SCHEDULE D (FOR SHEAR CONNECTION) (DETAILS (E) & (F))

Block = B
Concrete = C
2000 P.S.I.

POWERS/RAWL LOK/BOLT - SHEAR IN CONCRETE OR BLOCK
POWERS/RAWL CALK-IN - SHEAR IN CONCRETE OR BLOCK

ANCHOR TYPE	MATERIAL TYPE	STORM BAR REACTION (LBS.)	WALL MOUNT				ANGLE DIMENSIONS		STORM BAR OR HEADER TO ANGLES	
			DIAMETER (IN.)	EMBEDMENT DISTANCE (IN.)	QUANTITY OF FASTENERS PER ANGLE	CONCRETE OR BLOCK EDGE DISTANCE (IN.)	THICKNESS OF TWO (2) ANGLES (IN.)	MIN. (L) LENGTH OF EACH ANGLE (IN.)	No. OF TEK SCREWS EA. LEG EACH ANGLE	SIZE OF TEK SCREWS
LOK/BOLT	B	635	1/4	1-1/8	1	3	1/8	SEE DETAIL B/6	2	#12
CALK-IN	B	670	1/4	7/8	1	3	1/8		2	#12
LOK/BOLT	B	1090	3/8	1-1/2	1	4-1/2	1/8		2	#12
CALK-IN	B	1215	3/8	1-1/4	1	4-1/2	1/8		3	#12
LOK/BOLT	B	2180	3/8	1-1/2	2	4-1/2	1/8		3	#14
CALK-IN	C	2550	1/2	1-1/2	1	6	1/8		4	#14
LOK/BOLT	C	3070	3/8	1-5/8	2	4-1/2	1/8		4	#14

PRODUCT REVIEW
in complying with the Florida Building Code
Acceptance No. 05-0712.04
Expiration Date 08/22/07
By
Miami Dade Product Control Division

Thornton-Tomasetti Group
330 N. Andrews Ave., Suite 450 • Ft. Lauderdale, FL 33301
Tel. (954) 522-3690 • Fax (954) 522-3691 • COA # 7519
Website: www.TheTTGroup.com

Copyright © 2005 Thornton-Tomasetti Group, Inc.
CLIENT: COMPANY NAME

CLEAR MAXI ROLL-UP SHUTTER

Manufacturers of Hurricane & Security Protection Products
6865 N.W. 36th Avenue
Miami, Florida 33147
Phone: (305) 635-0900
Toll Free: (800) 327-0905
Fax: (305) 634-9078
HURST AWNING COMPANY, INC. "QUALITY SERVICE SINCE 1957"

V.J. Knezevich
Professional Engineer
FL License No.: PE 0010983

JUL 08 2005

revisions

no	date	by	description
0	06/28/05	NW	PREVIOUSLY DRAWING NO. 00-327

date 06/28/2005
scale AS NOTED
drawn by MCR
design by VJK
checked by VJK
drawing no. 05-348
sheet 6 of 9

Print Information: P:\FL1\Projects\KK5348.00\Drawings\R0-sub\05-348-06.DWG MCantu 06/29/2005 03:13:47pm 06/29/05 15:13

EXTERIOR STORM BAR SPAN SCHEDULE (F) MULTIPLE SPAN CONDITION (ALL SPANS)

NEGATIVE DESIGN LOAD (P.S.F.)	SLAT SPAN OR STORM BAR SPACING (IN.)	STORM BAR TYPE AND MAXIMUM LENGTH (INCHES) (10) 1" x 3"	(10) END REACTION (LBS.)
25.0	48	105	547
	54	99	583
	60	95	617
	66	91	649
	72	87	679
	84	81	737
	123	68	902
30.0	36	110	517
	48	97	603
	60	87	679
	66	83	715
	72	80	749
	84	74	812
	116	64	963
40.0	48	84	703
	54	80	749
	60	76	792
	66	73	832
	72	70	872
	78	67	909
	106	58	1069
50.0	48	76	792
	54	72	842
	60	68	891
	66	65	937
	72	63	980
	78	60	1023
	98	54	1153
60.0	48	70	872
	54	66	928
	60	63	980
	66	60	1031
	72	58	1079
	78	55	1125
	90	52	1213
70.0	48	65	945
	54	61	1006
	60	58	1063
	66	56	1118
	72	53	1170
	78	51	1220
	83	50	1260
80.0	36	70	872
	42	65	945
	48	61	1014
	54	58	1079
	60	55	1140
	66	52	1199
	78	48	1308
90.0	36	66	928
	42	61	1006
	48	58	1079
	54	54	1148
	60	52	1213
	66	49	1275
	74	47	1354
100.0	36	63	980
	42	58	1063
	48	55	1140
	54	52	1213
	60	49	1282
	66	47	1347
	70	46	1389
110.0	30	65	937
	36	60	1031
	42	56	1118
	48	52	1199
	54	49	1275
	60	47	1347
	66	45	1416

EXTERIOR STORM BAR SPAN SCHEDULE (F) MULTIPLE SPAN CONDITION (ALL SPANS)

NEGATIVE DESIGN LOAD (P.S.F.)	SLAT SPAN OR STORM BAR SPACING (IN.)	STORM BAR TYPE AND MAXIMUM LENGTH (INCHES) (10) 1" x 3"	(10) END REACTION (LBS.)
120.0	24	70	872
	30	63	980
	36	58	1079
	42	53	1170
	48	50	1255
	54	47	1334
	64	44	1458
130.0	18	77	781
	24	67	909
	30	60	1023
	36	55	1125
	42	51	1220
	48	48	1308
	61	43	1483
140.0	18	74	812
	24	65	945
	30	58	1063
	36	53	1170
	42	50	1268
	48	47	1360
	59	42	1515
150.0	18	72	842
	24	63	980
	30	56	1102
	36	52	1213
	42	48	1315
	48	45	1410
	57	42	1542
160.0	18	70	872
	24	61	1014
	30	55	1140
	36	50	1255
	42	47	1360
	48	44	1458
	55	41	1565
170.0	18	68	900
	18	68	900
	18	68	900
	24	59	1047
	30	53	1177
	36	49	1295
	52	41	1569
180.0	18	66	928
	18	66	928
	18	66	928
	24	58	1079
	30	52	1213
	36	47	1334
	49	41	1567
190.0	18	64	954
	18	64	954
	18	64	954
	24	56	1110
	30	50	1248
	36	46	1373
	46	41	1560
200.0	18	63	980
	18	63	980
	18	63	980
	24	55	1140
	30	49	1282
	36	45	1410
	44	41	1565
210.0	18	61	1006
	18	61	1006
	18	61	1006
	24	53	1170
	30	48	1315
	36	44	1446
	42	41	1567

EXTERIOR STORM BAR SPAN SCHEDULE (F) MULTIPLE SPAN CONDITION (ALL SPANS)

NEGATIVE DESIGN LOAD (P.S.F.)	SLAT SPAN OR STORM BAR SPACING (IN.)	STORM BAR TYPE AND MAXIMUM LENGTH (INCHES) (10) 1" x 3"	(10) END REACTION (LBS.)
220.0	18	60	1031
	18	60	1031
	18	60	1031
	24	52	1199
	30	47	1347
	36	43	1482
	40	41	1565

INTERIOR STORM BAR SPAN SCHEDULE (G) MULTIPLE SPAN CONDITION (ALL SPANS)

POSITIVE DESIGN LOAD (P.S.F.)	SLAT SPAN OR STORM BAR SPACING (IN.)	STORM BAR TYPE AND MAXIMUM LENGTH (INCHES) (10) 1" x 3"	(10) END REACTION (LBS.)	(10) MIN. SEP. FROM GLASS (IN.)
25.0	36	120	469	2-1/4"
	48	105	547	2"
	60	95	617	1-3/4"
	72	87	679	1-3/4"
	84	81	737	1-5/8"
	96	76	792	1-1/2"
	103	74	822	1-1/2"
30.0	36	110	517	2-1/8"
	48	97	603	1-7/8"
	60	87	679	1-3/4"
	72	80	749	1-5/8"
	84	74	812	1-1/2"
	96	70	872	1-1/2"
	98	69	881	1-1/2"
40.0	36	97	603	1-7/8"
	48	84	703	1-5/8"
	54	80	749	1-5/8"
	60	76	792	1-1/2"
	72	70	872	1-1/2"
	84	65	945	1-3/8"
	91	62	986	1-3/8"
50.0	48	76	792	1-1/2"
	54	72	842	1-1/2"
	60	68	891	1-1/2"
	72	63	980	1-3/8"
	78	60	1023	1-3/8"
	84	58	1063	1-3/8"
	86	58	1076	1-3/8"
60.0	48	70	872	1-1/2"
	54	66	928	1-3/8"
	60	63	980	1-3/8"
	66	60	1031	1-3/8"
	72	58	1079	1-3/8"
	78	55	1125	1-1/4"
	83	54	1163	1-1/4"
70.0	48	65	945	1-3/8"
	54	61	1006	1-3/8"
	60	58	1063	1-3/8"
	66	56	1118	1-1/4"
	72	53	1170	1-1/4"
	78	51	1220	1-1/4"
	79	51	1228	1-1/4"
80.0	42	65	945	1-3/8"
	48	61	1014	1-3/8"
	54	58	1079	1-3/8"
	60	55	1140	1-1/4"
	66	52	1199	1-1/4"
	72	50	1255	1-1/4"
	77	49	1300	1-1/4"
90.0	36	66	928	1-3/8"
	42	61	1006	1-3/8"
	48	58	1079	1-3/8"
	54	54	1148	1-1/4"
	60	52	1213	1-1/4"
	66	49	1275	1-1/4"
	74	47	1354	1-1/4"
100.0	36	63	980	1-3/8"
	42	58	1063	1-3/8"
	48	55	1140	1-1/4"
	54	52	1213	1-1/4"
	60	49	1282	1-1/4"
	66	47	1347	1-1/4"
	70	46	1389	1-1/4"
110.0	30	65	937	1-3/8"
	36	60	1031	1-3/8"
	42	56	1118	1-1/4"
	48	52	1199	1-1/4"
	54	49	1275	1-1/4"
	60	47	1347	1-1/4"
	66	45	1416	1-1/4"

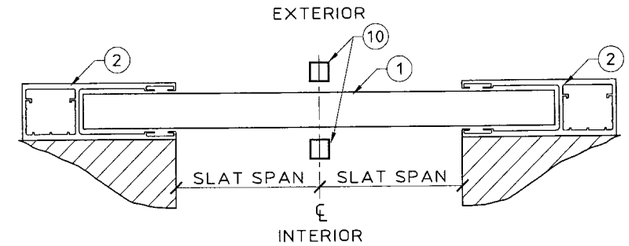

DOUBLE SPAN LAYOUT

NOTE:

INTERPOLATE FOR STORM BAR SPANS & REACTIONS BETWEEN THOSE SHOWN ON THIS SHEET.

PRODUCT REVISED
as complying with the Florida
Building Code
Acceptance No 05-0712.04
Expiration Date 08/22/07
By
Miami-Dade Product Control
Division

Thornton-Tomasetti Group
330 N. Andrews Ave. Suite 450 • Ft. Lauderdale, FL 33301
Tel. (954) 522-3690 • Fax (954) 522-3691 • COA # 7519
Website: www.TheTTGroup.com

Copyright © 2005 Thornton-Tomasetti Group, Inc.
CLIENT: COMPANY NAME

CLEAR MAXI ROLL-UP SHUTTER

Manufacturers of Hurricane & Security Protection Products
HURST AWNING COMPANY, INC. "QUALITY SERVICE SINCE 1957"
6865 N.W. 36th Avenue
Miami, Florida 33147
Phone: (305) 635-0900
Toll Free: (800) 327-0905
Fax: (305) 634-9078

V.J. Knezevich
Professional Engineer
FL License No. PE 0010983

JUL 08 2005

revisions

no	date	by	description
0	06/28/05	NW	PREVIOUSLY DRAWING NO. 00-327

date 06/28/2005
scale AS NOTED
drawn by MCR
design by VJK
checked by VJK
drawing no. 05-348
sheet 7 of 9

Print Information: P:\FL1\Projects\KK5348.00\Drawings\RO-sub\05-348-07.DWG MCantu 06/29/2005 03:24:24pm 06/29/05 15:13

HEADER LENGTH OR SHUTTER WIDTH SCHEDULE (H)

NEGATIVE DESIGN LOAD (P.S.F.)	MAXIMUM SLAT SPAN USED (IN.)	HEADER TYPE AND MAXIMUM LENGTH (INCHES)							
		(4) 2" x 5" x 1/8"							
		STORM BAR HEIGHT (IN.)							
		48	60	72	84	96	120	180	240
30.0	24	216	194	178	165	155	139	114	99
	36	216	194	178	165	155	139	114	101
	48	216	194	178	165	155	141	116	89
	60	216	194	180	167	157	141	103	89
	72	218	196	180	167	138	125	103	89
	84	218	196	180	148	139	125	103	89
	117	194	174	160	148	139	125	-	-
40.0	24	188	169	155	144	135	121	99	87
	36	188	169	155	144	135	121	101	87
	48	188	169	155	144	136	122	89	77
	60	188	171	157	145	136	109	89	77
	72	190	171	157	129	121	109	89	77
	84	190	171	139	129	121	109	89	-
	107	169	152	139	129	121	109	-	-
50.0	24	169	152	139	129	121	109	89	77
	36	169	152	139	129	121	109	90	69
	48	169	152	141	131	122	110	80	69
	60	171	153	141	116	109	98	80	69
	72	171	136	125	116	109	98	80	-
	84	171	136	125	116	109	98	-	-
	99	152	136	125	116	109	-	-	-
60.0	24	155	139	127	118	111	99	82	71
	36	155	139	127	118	111	101	83	63
	48	155	141	129	120	112	89	73	63
	60	157	141	114	106	99	89	73	63
	72	138	125	114	106	99	89	73	-
	84	139	125	114	106	99	89	-	-
	91	139	125	114	106	99	-	-	-
70.0	18	144	129	118	110	103	92	76	65
	24	144	129	118	110	103	92	76	66
	36	144	129	118	110	104	93	68	59
	48	144	131	120	111	92	83	68	59
	60	145	116	106	98	92	83	68	-
	72	129	116	106	98	92	83	-	-
	84	129	116	106	98	92	-	-	-
80.0	18	135	121	111	103	96	87	71	61
	24	135	121	111	103	96	87	71	62
	36	135	121	111	104	97	87	63	55
	48	136	122	112	92	87	77	63	55
	60	136	109	99	92	87	77	63	-
	72	121	109	99	92	87	77	-	-
	79	121	109	99	92	87	-	-	-
90.0	18	127	114	105	97	91	82	67	58
	24	127	114	105	97	91	82	67	58
	36	127	114	106	98	92	83	60	52
	48	129	116	94	87	82	73	60	52
	60	114	103	94	87	82	73	-	-
	72	114	103	94	87	82	73	-	-
	75	114	103	94	87	82	-	-	-
100.0	18	121	109	99	92	87	77	63	55
	24	121	109	99	92	87	77	64	55
	30	121	109	99	92	87	78	57	49
	36	121	109	101	93	87	69	57	49
	48	122	110	89	83	77	69	57	49
	60	109	98	89	83	77	69	-	-
	72	109	98	89	83	77	-	-	-
110.0	18	116	104	95	88	83	74	60	53
	24	116	104	95	88	83	74	61	47
	30	116	104	95	89	83	75	54	47
	36	116	105	96	89	83	66	54	47
	48	117	93	85	79	74	66	54	-
	60	104	93	85	79	74	66	-	-
	70	104	93	85	79	74	-	-	-
120.0	18	111	99	91	84	79	71	58	51
	24	111	99	91	84	79	71	58	45
	30	111	99	91	85	80	71	52	45
	36	111	101	92	85	71	63	52	45
	48	112	89	82	76	71	63	52	-
	60	99	89	82	76	71	63	-	-
	68	99	89	82	76	71	-	-	-

HEADER LENGTH OR SHUTTER WIDTH SCHEDULE (H)

NEGATIVE DESIGN LOAD (P.S.F.)	MAXIMUM SLAT SPAN USED (IN.)	HEADER TYPE AND MAXIMUM LENGTH (INCHES)							
		(4) 2" x 5" x 1/8"							
		STORM BAR HEIGHT (IN.)							
		48	60	72	84	96	120	180	240
130.0	18	107	96	88	81	76	68	55	49
	24	107	96	88	81	76	69	56	43
	30	107	96	89	82	77	69	50	43
	36	108	97	89	82	68	61	50	43
	48	96	86	78	73	68	61	50	-
	60	96	86	78	73	68	61	-	-
	64	96	86	78	73	68	-	-	-
140.0	18	103	92	84	78	73	65	54	47
	24	103	92	84	78	73	66	48	41
	30	103	92	85	79	74	59	48	41
	36	104	93	85	70	65	59	48	41
	42	104	83	76	70	65	59	48	-
	48	92	83	76	70	65	59	-	-
	60	92	83	76	70	65	-	-	-
150.0	18	99	89	82	76	71	63	52	45
	24	99	89	82	76	71	64	46	40
	30	99	89	83	76	71	57	46	40
	36	101	90	83	68	63	57	46	40
	42	101	80	73	68	63	57	46	-
	48	89	80	73	68	63	57	-	-
	57	89	80	73	68	63	-	-	-
160.0	18	96	87	79	73	68	61	51	44
	24	96	87	79	73	69	62	45	39
	30	96	87	80	74	69	55	45	39
	36	97	87	71	65	61	55	45	39
	42	97	77	71	65	61	55	45	-
	48	87	77	71	65	61	55	-	-
	56	87	77	71	65	61	-	-	-
170.0	18	94	84	77	71	66	59	49	42
	24	94	84	77	72	67	60	43	38
	30	94	85	78	72	59	53	43	38
	36	95	85	69	63	59	53	43	38
	42	84	75	69	63	59	53	43	-
	48	84	75	69	63	59	53	-	-
	52	84	75	69	63	59	53	-	-
180.0	18	91	82	75	69	65	58	48	41
	24	91	82	75	70	65	58	42	37
	30	91	83	75	70	58	52	42	37
	36	92	83	67	62	58	52	42	37
	42	82	73	67	62	58	52	42	-
	48	82	73	67	62	58	52	-	-
	49	82	73	67	62	58	52	-	-
190.0	18	89	79	73	67	63	56	46	36
	18	89	79	73	67	63	56	46	36
	24	89	79	73	68	64	57	41	36
	30	90	80	73	68	56	50	41	36
	36	90	71	65	60	56	50	41	-
	42	79	71	65	60	56	50	-	-
	47	79	71	65	60	56	50	-	-
200.0	18	87	77	71	65	61	55	45	39
	18	87	77	71	65	61	55	45	35
	24	87	77	71	66	62	55	40	35
	30	87	78	71	59	55	49	40	35
	36	87	69	63	59	55	49	40	-
	42	77	69	63	59	55	49	-	-
	44	77	69	63	59	55	49	-	-
210.0	18	84	76	69	64	60	54	44	38
	18	84	76	69	64	60	53	44	34
	18	84	76	69	64	60	54	44	34
	24	84	76	70	65	60	48	39	34
	30	85	76	70	57	53	48	39	34
	36	85	68	62	57	53	48	39	-
	42	76	68	62	57	53	48	-	-
220.0	18	83	74	67	62	58	53	43	37
	18	83	74	67	62	58	53	43	37
	18	83	74	67	62	58	53	43	33
	24	83	74	68	63	59	47	38	33
	30	83	75	68	56	52	47	38	33
	36	83	66	60	56	52	47	38	-
	40	74	66	60	56	52	47	-	-

NOTE:

INTERPOLATE FOR HEADER SPANS AND REACTIONS BETWEEN THOSE SHOWN ON THIS SHEET. FOR HEADER REACTION DETERMINATION AND END CONNECTION DETAILS & ANCHORS, SEE SCHEDULE E.

PRODUCT REVIEWED
as complying with the Florida
Building Code
Acceptance No. 05-0712.04
Expiration Date 08/22/07
By
Miami Dade Product Control
Division

Thornton-Tomasetti Group
330 N. Andrews Ave., Suite 450 • Ft. Lauderdale, Fl. 33301
Tel. (954) 522-3690 • Fax (954) 522-3691 • COA # 7519
Website: www.TheTTGroup.com

Copyright © 2005 Thornton-Tomasetti Group, Inc.

CLIENT: COMPANY NAME

CLEAR MAXI ROLL-UP SHUTTER

Manufacturers of Hurricane & Security Protection Products
6865 N.W. 36th Avenue
Miami, Florida 33147
Phone: (305) 635-0900
Toll Free: (800) 327-0905
Fax: (305) 634-9078
HURST AWNING COMPANY, INC.
"QUALITY SERVICE SINCE 1957"

V.J. Knezevich
Professional Engineer
FL License No.: PE 0010983

JUL 08 2005

revisions			
no	date	by	description
0	06/28/05	NW	PREVIOUSLY DRAWING NO. 00-327

date 06/28/2005

scale AS NOTED | drawn by MCR

design by VJK | checked by VJK

drawing no. 05-348

sheet 8 of 9

Print Information: P:\FL1\Projects\KK5348.00\Drawings\RO-sub\05-348-08.DWG MCantu 06/29/2005 03:12:50pm 06/29/05 15:12

SIDE RAIL (GUIDE) ANCHOR SCHEDULE

FASTENER MAXIMUM SPACING (INCHES) REQUIRED FOR VARIOUS DESIGN LOADS AND SPANS

EXIST. STRUC.	ANCHOR TYPE	LOAD (W) P.S.F. MAX. (SEE NOTE 1)	MIN. 2" EDGE DISTANCE															MIN. 3" EDGE DISTANCE													
			SPANS UP TO 4'-0" (SEE NOTE 1)					SPANS UP TO 7'-9" (SEE NOTE 1)					SPANS UP TO 10'-3" (SEE NOTE 1)					SPANS UP TO 4'-0" (SEE NOTE 1)					SPANS UP TO 7'-9" (SEE NOTE 1)					SPANS UP TO 10'-3" (SEE NOTE 1)				
			CONNECTION TYPE (SEE NOTE 3)					CONNECTION TYPE (SEE NOTE 3)					CONNECTION TYPE (SEE NOTE 3)					CONNECTION TYPE (SEE NOTE 3)					CONNECTION TYPE (SEE NOTE 3)					CONNECTION TYPE (SEE NOTE 3)				
			C1	C2	C3	C4	C5	C1	C2	C3	C4	C5	C1	C2	C3	C4	C5	C1	C2	C3	C4	C5	C1	C2	C3	C4	C5	C1	C2	C3	C4	C5
CONCRETE	1/4"Φ ITW TAPCON W/ 1-3/4" MIN. EMBEDMENT (MIN. 3,192 P.S.I. CONCRETE)	30.0	12	12	12			12	12	10			12	12	7			12	12	12			12	12	11			12	12	8		
		50.0	12	12	11			12	9	6			12	5	4			12	12	12			12	9	6			12	5	5		
		70.0	12	12	8			12	4	4			12	4	4			12	12	9			12	5	4			12	4	4		
		80.0	12	12	7			12	4	4			12	4	4			12	12	8			12	4	4			12	4	4		
		220.0	12	4	4			12	4	4			12	4	4			12	4	4			12	4	4			12	4	4		
	1/4"Φ ASHLEY QUICK-SET SCREW WITH 1-1/4" MIN. EMBEDMENT (MIN. 3,320 P.S.I. CONCRETE)	30.0	12	12	8			12	12	4			12	6	3			12	12	8			12	12	4			12	6	3		
		50.0	12	12	5			12	3				9					12	12	5			12	3				9				
		70.0	12	8	3			8					8					12	8	3			8					8				
		80.0	12	5	3			8					8					12	5	3			8					8				
		220.0	8					8					8					8					8					8				
	1/4"Φ ELCO TAPCON W/ 1-1/2" MIN. EMBEDMENT (MIN. 3,320 P.S.I. CONCRETE)	30.0	12	12	12			12	12	6			12	9	5			12	12	12			12	12	8			12	12	6		
		50.0	12	12	7			12	5	4			12		3			12	12	9			12	6	5			12	3	3		
		70.0	12	12	5			12					12					12	12	6			12	3	3			12	3	3		
		80.0	12	7	4			12					12					12	9	6			12	3	3			12	3	3		
		220.0	12					12					12					12	3	3			12	3	3			12	3	3		
HOLLOW CONCRETE BLOCK	1/4"Φ ITW TAPCON W/ 1-1/4" MIN. EMBEDMENT	30.0	12	12	7			12	12	3			12	5				12	12	8			12	12	4			12	6	3		
		50.0	12	12	4			10					7					12	12	5			12	3				9				
		70.0	12	7	3			7					7					12	8	3			8					8				
		80.0	12	4				7					7					12	5	3			8					8				
		220.0	7					7					7					8					8					8				
	1/4"Φ ASHLEY QUICK-SET SCREW WITH 1-1/4" MIN. EMBEDMENT	30.0	12	12	8			12	12	4			12	6	3			12	12	8			12	12	4			12	6	3		
		50.0	12	12	5			12	3				9					12	12	5			12	3				9				
		70.0	12	8	3			8					8					12	8	3			8					8				
		80.0	12	5	3			8					8					12	5	3			8					8				
		220.0	8					8					8					8					8					8				
	1/4"Φ ELCO TAPCON W/ 1-1/4" MIN. EMBEDMENT	30.0	12	12	7			12	12	4			12	5	3			12	12	9			12	12	5			12	7	3		
		50.0	12	12	4			10					8					12	12	5			12	3	3			10				
		70.0	12	7	3			7					7					12	9	4			9					9				
		80.0	12	4				7					7					12	5	3			9					9				
		220.0	7					7					7					9					9					9				

SIDE RAIL (GUIDE) ANCHOR SCHEDULE

FASTENER MAXIMUM SPACING (INCHES) REQUIRED FOR VARIOUS DESIGN LOADS AND SPANS

EXIST. STRUC.	ANCHOR TYPE	LOAD (W) P.S.F. MAX. (SEE NOTE 1)	MIN. 3/4" EDGE DISTANCE														
			SPANS UP TO 4'-0" (SEE NOTE 1)					SPANS UP TO 7'-9" (SEE NOTE 1)					SPANS UP TO 10'-3" (SEE NOTE 1)				
			CONNECTION TYPE (SEE NOTE 3)					CONNECTION TYPE (SEE NOTE 3)					CONNECTION TYPE (SEE NOTE 3)				
			C1	C2	C3	C4	C5	C1	C2	C3	C4	C5	C1	C2	C3	C4	C5
WOOD	2" MIN. 1/4"Φ x MIN. 3" LONG LAG SCREW W/ MIN. 2" EMBED. SHEAR PARALLEL OR PERP. TO WOOD GRAIN	30.0	12	12	12			12	12	11			12	12	8		
		50.0	12	12	12			12	12	6			12	7	5		
		70.0	12	12	9			12	6	4			12	6	4		
		80.0	12	12	8			12	6	4			12	6	4		
		220.0	12	6	4			12	6	4			12	6	4		

ANCHOR NOTES:

1. **SPANS AND LOADS SHOWN HERE ARE FOR DETERMINING ANCHOR SPACING ONLY. ALLOWABLE ROLL-UP SHUTTER SPANS FOR SPECIFIC LOADS MUST BE LIMITED TO THOSE SHOWN IN SCHEDULES B-1 & B-2, SHEET 4.**
2. ENTER ANCHOR SCHEDULE BASED ON THE EXISTING STRUCTURE MATERIAL, ANCHOR TYPE AND EDGE DISTANCE. SELECT DESIGN LOAD GREATER THAN OR EQUAL TO NEGATIVE DESIGN LOAD ON SHUTTER AND SELECT SPAN GREATER THAN OR EQUAL TO SLAT SPAN.
3. SEE MOUNTING SECTION DETAILS FOR IDENTIFICATION OF CONNECTION TYPE.
4. EXISTING STRUCTURE MAY BE CONCRETE, HOLLOW BLOCK OR WOOD FRAMING. REFERENCE ANCHOR SCHEDULE FOR PROPER ANCHOR TYPE BASED ON TYPE OF EXISTING STRUCTURE.
5. ANCHORS SHALL BE INSTALLED IN ACCORDANCE WITH MANUFACTURERS' RECOMMENDATIONS.
6. MINIMUM EMBEDMENT AND EDGE DISTANCE EXCLUDES WALL FINISH OR STUCCO.
7. WHERE EXISTING STRUCTURE IS WOOD FRAMING, WOOD FRAMING CONDITIONS VARY. FIELD VERIFY THAT FASTENERS ARE INTO ADEQUATE WOOD FRAMING MEMBERS, NOT PLYWOOD.
8. WHERE LAG SCREWS FASTEN TO NARROW FACE OF STUD FRAMING, FASTENER SHALL BE LOCATED IN CENTER OF NOMINAL 2" x 4" (MIN.) WOOD STUD. 3/4" EDGE DISTANCE IS ACCEPTABLE FOR WOOD FRAMING. WOOD STUD SHALL BE "SOUTHERN PINE" G=0.55 OR GREATER DENSITY. LAG SCREWS SHALL HAVE PHILLIPS PAN HEAD OR HEX HEAD.
9. DESIGNATES ANCHOR CONDITIONS WHICH ARE NOT ACCEPTABLE USES.
10. FOR LOADS GREATER THAN THOSE SPECIFIED IN THE ANCHOR SCHEDULE, SITE SPECIFIC FASTENER ANALYSIS SHALL BE PREPARED BY THORNTON-TOMASETTI GROUP, INC.

PRODUCT REVIEWED
as complying with the Florida
Building Code
Acceptance No. 05-0712.04
Expiration Date 08/22/07
By
Miami-Dade Product Control
Division

Thornton-Tomasetti Group
330 N. Andrews Ave., Suite 450 • Ft. Lauderdale, FL 33301
Tel. (954) 522-3690 • Fax (954) 522-3691 • COA # 7519
Website: www.TheTTGroup.com

Copyright © 2005 Thornton-Tomasetti Group, Inc.

CLIENT: COMPANY NAME

CLEAR MAXI ROLL-UP SHUTTER

Manufacturers of Hurricane & Security Protection Products
6865 N.W. 36th Avenue
Miami, Florida 33147
Phone: (305) 635-0900
Toll Free: (800) 327-0905
Fax: (305) 634-9078
HURST AWNING COMPANY, INC.
"QUALITY SERVICE SINCE 1957"

V.J. Knezevich
Professional Engineer
FL License No.: PE 0010983

JUL 08 2005

revisions

no	date	by	description
0	06/28/05	SNW	PREVIOUSLY DRAWING NO. 00-327

date 06/28/2005
scale AS NOTED
drawn by MCR
design by VJK
checked by VJK
drawing no. 05-348
sheet 9 of 9

Print Information: P:\FL1\Projects\KK5348.00\Drawings\R0-sub\05-348-09.DWG MCantu 06/29/2005 03:16:45pm 06/29/05 15:16