MIAMI-DADE COUNTY

BUILDING CODE COMPLIANCE OFFICE (BCCO)
PRODUCT CONTROL DIVISION

MIAMI-DADE COUNTY, FLORIDA
METRO-DADE FLAGLER BUILDING
140 WEST FLAGLER STREET, SUITE 1603
MIAMI, FLORIDA 33130-1563
(305) 375-2901 FAX (305) 375-2908
www.buildingcodeonline.com

NOTICE OF ACCEPTANCE (NOA)

Schuco USA, L.P.
240 Pane Road
Newington, CT 06111

SCOPE:

This NOA is being issued under the applicable rules and regulations governing the use of construction materials. The documentation submitted has been reviewed by Miami-Dade County Product Control Division and accepted by the Board of Rules and Appeals (BORA) to be used in Miami Dade County and other areas where allowed by the Authority Having Jurisdiction (AHJ).

This NOA shall not be valid after the expiration date stated below. The Miami-Dade County Product Control Division (In Miami Dade County) and/or the AHJ (in areas other than Miami Dade County) reserve the right to have this product or material tested for quality assurance purposes. If this product or material fails to perform in the accepted manner, the manufacturer will incur the expense of such testing and the AHJ may immediately revoke, modify, or suspend the use of such product or material within their jurisdiction. BORA reserves the right to revoke this acceptance, if it is determined by Miami-Dade County Product Control Division that this product or material fails to meet the requirements of the applicable building code.

This product is approved as described herein, and has been designed to comply with the Florida Building Code, including the High Velocity Hurricane Zone.

DESCRIPTION: "Hurricane Force 5 Corona AS60" Dual Action Inswing White PVC French Door LMI

APPROVAL DOCUMENT: Drawing No. **S-2542**, titled "Corona AS60 Extruded Vinyl Dual Action 'Impact" Door"", sheets 1 through 5 of 5, dated 04/28/05 with revision #2 dated 9/28/05, prepared by RW Building Consultants, Inc., signed and sealed by Lyndon F. Schmidt, P.E., bearing the Miami-Dade County Product Control Approval stamp with the Notice of Acceptance number and approval date by the Miami-Dade County Product Control Division.

MISSILE IMPACT RATING: Large and Small Missile Impact Resistant

LABELING: Each unit shall bear a permanent label with the manufacturer's name or logo, city, state and following statement: "Miami-Dade County Product Control Approved", unless otherwise noted herein.

RENEWAL of this NOA shall be considered after a renewal application has been filed and there has been no change in the applicable building code negatively affecting the performance of this product.

TERMINATION of this NOA will occur after the expiration date or if there has been a revision or change in the materials, use, and/or manufacture of the product or process. Misuse of this NOA as an endorsement of any product, for sales, advertising or any other purposes shall automatically terminate this NOA. Failure to comply with any section of this NOA shall be cause for termination and removal of NOA.

ADVERTISEMENT: The NOA number preceded by the words Miami-Dade County, Florida, and followed by the expiration date may be displayed in advertising literature. If any portion of the NOA is displayed, then it shall be done in its entirety.

INSPECTION: A copy of this entire NOA shall be provided to the user by the manufacturer or its distributors and shall be available for inspection at the job site at the request of the Building Official.

This NOA consists of this page 1 and evidence page E-1, as well as approval document mentioned above.

The submitted documentation was reviewed by **Manuel Perez, P.E.**

PRODUCT CONTROL ACCEPTED

Schuco USA, L.P.

NOTICE OF ACCEPTANCE: EVIDENCE SUBMITTED

A. DRAWINGS

1. Manufacturer's die drawings and sections.
2. Drawing No **S-2542**, Sheets 1 through 5 of 5, titled "Corona AS60 Extruded Vinyl Dual Action 'Impact' Door", prepared by RW Building Consultants, Inc., dated 04/28/05 with revision #2 dated 9/28/05, signed and sealed by Lyndon F. Schmidt, P.E.

B. TESTS

1. Test reports on 1) Air Infiltration Test, per FBC, TAS 202-94
   2) Uniform Static Air Pressure Test, Loading per FBC TAS 202-94
   3) Water Resistance Test, per FBC, TAS 202-94
   4) Large Missile Impact Test per FBC, TAS 201-94
   5) Cyclic Wind Pressure Loading per FBC, TAS 203-94
   6) Forced Entry Test, per FBC 3603.2 (b) and TAS 202-94

   along with marked-up drawings and installation diagram of white PVC French door, prepared by ETC Laboratories, Inc., Test Report No. **ETC-05-189-16109.0**, dated 03/09/-15/05, signed and sealed by Mark D. Passero, P.E.

C. CALCULATIONS

1. Anchor verification calculations and structural analysis complying with FBC-2004, dated 05/31/05, revised on 5/23/06, prepared by RW Building Consultants, Inc., signed and sealed by Lyndon F. Schmidt, P.E.
   Complies with ASTM E1300-02

D. QUALITY ASSURANCE

1. Miami Dade Building Code Compliance Office (BCCO).

E. MATERIAL CERTIFICATIONS

1. Notice of Acceptance No. **98-0608.03** issued to E.I. DuPont DeNemours for "**Sentry Glass Plus**" dated 01/14/99, expiring on 01/14/02.
2. Notice of Acceptance No. **06-0103.01** issued to Regal Plastic Co. for their "**White PVC Exterior Extrusions for Windows and Doors**" dated 05/25/06, expiring on 05/25/11.

F. STATEMENTS

1. Statement letter of conformance and no financial interest, dated May 31, 2005, signed and sealed by Lyndon Schmidt, P.E.
2. Statement letter of no financial interest, dated May 12, 2005, signed by Matthias Ruehr, P.E.

G. OTHER

1. Letter from the consultant stating that the product is compliance with the Florida Building Code (FBC).

Manuel Perez, P.E.
Product Control Examiner
NOA No 05-0713.04
Expiration Date: May 25, 2011
Approval Date: May 25, 2006

SCHÜCO
Schüco USA, L.P. USA
240 Pane Road Newington, CT 06111
PH. 860.666.0505 / FAX. 860.666.1695

Hurricane FORCE VI™

CORONA AS60 EXTRUDED VINYL DUAL ACTION TILT IN OR INSWING DOOR "IMPACT"

GENERAL NOTES

1. THIS PRODUCT HAS BEEN EVALUATED AND IS IN COMPLIANCE WITH THE FLORIDA BUILDING CODE INCLUDING THE "HIGH VELOCITY HURRICANE ZONE".
2. PRODUCT ANCHORS SHALL BE AS LISTED AND SPACED AS SHOWN ON DETAILS. ANCHOR EMBEDMENT TO BASE MATERIAL SHALL BE BEYOND WALL DRESSING OR STUCCO.
3. WHEN USED IN THE "HIGH VELOCITY HURRICANE ZONE" THIS PRODUCT COMPLIES WITH SECTION 1626 OF THE FLORIDA BUILDING CODE AND DOES NOT REQUIRE AN IMPACT RESISTANT COVERING.
4. WHEN USED IN AREAS OUTSIDE OF THE "HVHZ" REQUIRING WIND-BORNE DEBRIS PROTECTION THIS PRODUCT COMPLIES WITH SECTION 1609.1.4 OF THE FLORIDA BUILDING CODE AND DOES NOT REQUIRE AN IMPACT RESISTANT COVERING.THIS PRODUCT DOES NOT MEET THE REQUIREMENTS FOR ENHANCED PROTECTION OF ESSENTIAL FACILITIES AS DEFINED IN ASTM E1996.
5. FOR 2X STUD FRAMING CONSTRUCTION, THE ANCHORING OF THESE UNITS SHALL BE THE SAME AS THAT SHOWN FOR 2X BUCK MASONRY CONSTRUCTION.
6. CONDITIONS NOT COVERED BY THIS DRAWING ARE SUBJECT TO FURTHER ENGINEERING ANALYSIS.
7. WOOD BUCKS BY OTHERS, MUST BE ANCHORED PROPERLY TO TRANSFER LOADS TO STRUCTURE AND TO BE REVIEWED BY BUILDING OFFICIAL.
8. FOR DESIGN PRESSURE RATING SEE CHART THIS SHEET.
9. THIS PRODUCT MEETS THE WATER REQUIREMENTS FOR HIGH VELOCITY HURRICANE ZONES.

TABLE OF CONTENTS

SHEET #	DESCRIPTION
1	TYPICAL ELEVATIONS, DESIGN PRESSURE & GENERAL NOTES
2	VERTICAL & HORIZONTAL CROSS SECTIONS
3	DOOR ANCHORING & GLAZING DETAIL
4	TILT AND TURN HARDWARE ASS'Y & LOCKING POINT DETAILS
5	BILL OF MATERIALS & COMPONENTS

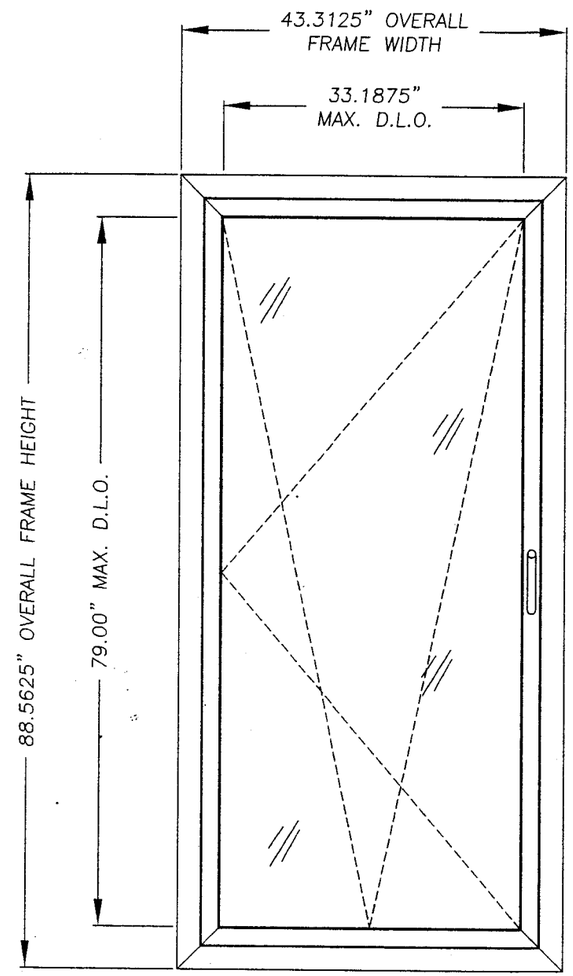

VIEWED FROM EXTERIOR

DESIGN PRESSURE RATINGS (PSF)

OVERALL FRAME DIMENSION	OVERALL DAYLIGHT DIMENSION	GLASS TYPE	ASTM E1300-02	
			POSITIVE	NEGATIVE
43.3125" x 88.5625"	33.1875" x 79.0000"	1/8" TEMP. – AIR – 1/8" H.S. – .090" PVB.– 1/8" H.S.	+65.0	-70.0

Approved as noted subject to Product Approval Date MAY 25 2006 NOA 05-0713.04 Miami-Dade Product Control Division By

Documents Prepared By:
RW BUILDING CONSULTANTS, INC.
P.O. Box 230 Valrico FL. 33595
Phone No.: 813.659.9197
Florida Board of Professional Engineers
Certificate Of Authorization No. 9875
Lyndon, F. Schmidt, P.E. No. 43409

PRODUCT: CORONA AS60 EXTRUDED VINYL DUAL ACTION "IMPACT" DOOR

PART OR ASSEMBLY: TYPICAL ELEVATIONS, DESIGN PRESSURE & GENERAL NOTES

REVISIONS

NO.	DATE		BY
2	9/28/05	ADDED SWING & TILT INDICATIONS	WWH
1	7/25/05	PER DADE COMMENTS	EW

DATE: 04/28/05
SCALE: N.T.S.
DWG. BY: EW
CHK. BY: LFS
DRAWING NO.: S-2542
SHEET 1 OF 5

R:\PROJ 500 - 650\PF57\S-2542-REV-2\S-2542-1.DWG

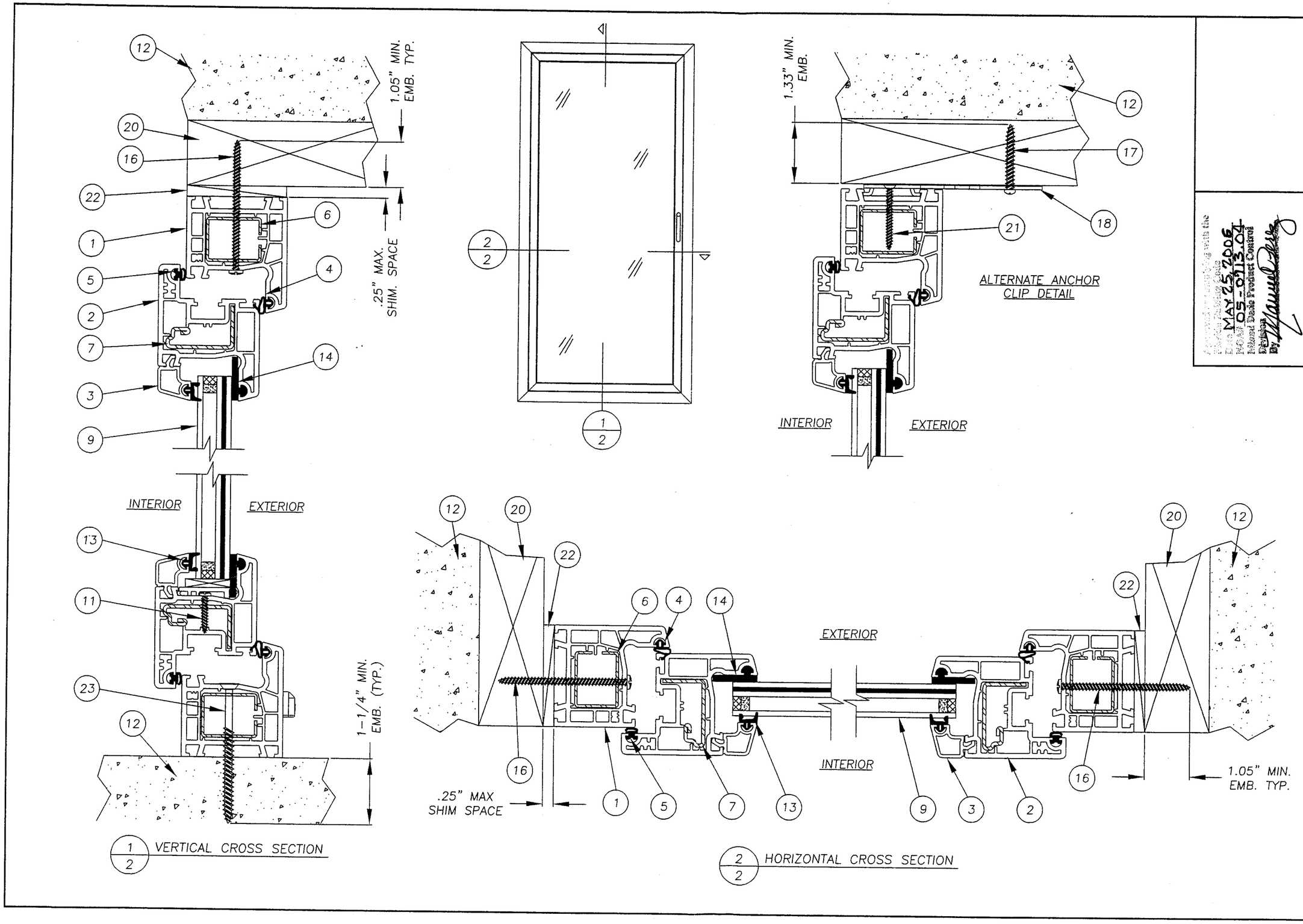

Approved/Acknowledging with the Florida Building Code
Date MAY 25 2006
NOAA 05-0713.04
Miami Dade Product Control
Division
By

Documents Prepared By:
RW BUILDING CONSULTANTS, INC.
P.O. Box 230 Valrico FL. 33595
Phone No.: 813.659.9197
Florida Board of Professional Engineers
Certificate Of Authorization No. 9813
Lyndon, F. Schmidt, P.E. No. 43409

PRODUCT: CORONA AS60 EXTRUDED VINYL DUAL ACTION "IMPACT" DOOR

PART OR ASSEMBLY: VERTICAL & HORIZONTAL CROSS SECTIONS

REVISIONS

NO.	DATE		BY
2	9/28/05	ADDED SWING & TILT INDICATORS	WWH
1	7/25/05	PER DADE COMMENTS	EW

DATE: 04/28/05
SCALE: N.T.S.
DWG. BY: EW
CHK. BY: LFS
DRAWING NO.: S-2542
SHEET 2 OF 5

R:\PROJ 500 - 650\PF571\S-2542-REV-2\S-2542-2.DWG

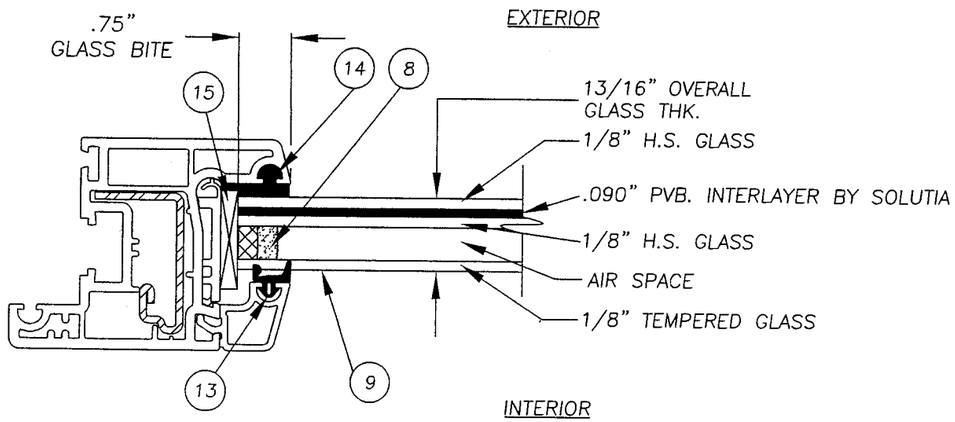

TYPICAL GLAZING DETAIL
13/16" INSULATED ANNEALED GLASS

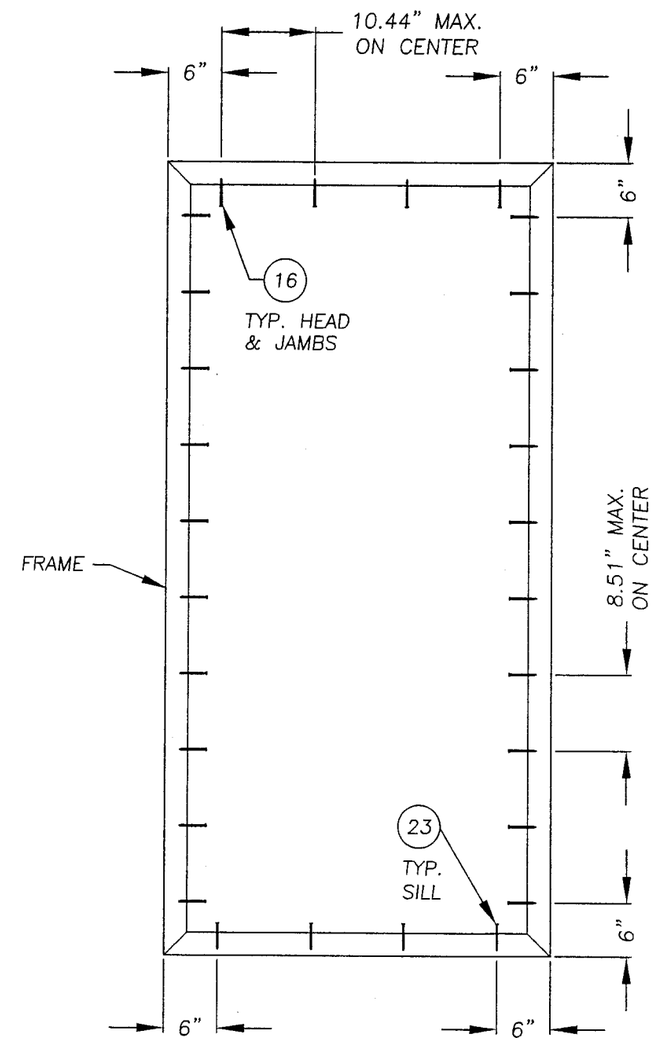

FRAME ANCHORING

Approved as complying with the Florida Building Code
Date MAY 25, 2005
NOA# 05-0713.04
Miami Dade Product Control Division
By

Documents Prepared By:
BUILDING CONSULTANTS, INC.
P.O. Box 230 Valrico FL. 33595
Phone No.: 813.659.9197
Florida Board of Professional Engineers
Certificate Of Authorization No. 9813
Lyndon, F. Schmidt, P.E. No. 43409

PRODUCT:
CORONA AS60
EXTRUDED VINYL DUAL ACTION
"IMPACT" DOOR

PART OR ASSEMBLY:
DOOR ANCHORING
& GLAZING DETAIL

NO.	DATE		BY
2	9/28/05	ADDED SWING & TILT INDICATORS	WWH
1	7/25/05	PER DADE COMMENTS	EW

REVISIONS

DATE: 04/28/05
SCALE: N.T.S.
DWG. BY: EW
CHK. BY: LFS
DRAWING NO.: S-2542
SHEET 3 OF 5

R:\PROJ 500 - 650\PF57\S-2542 REV-2\S-2542-3.DWG

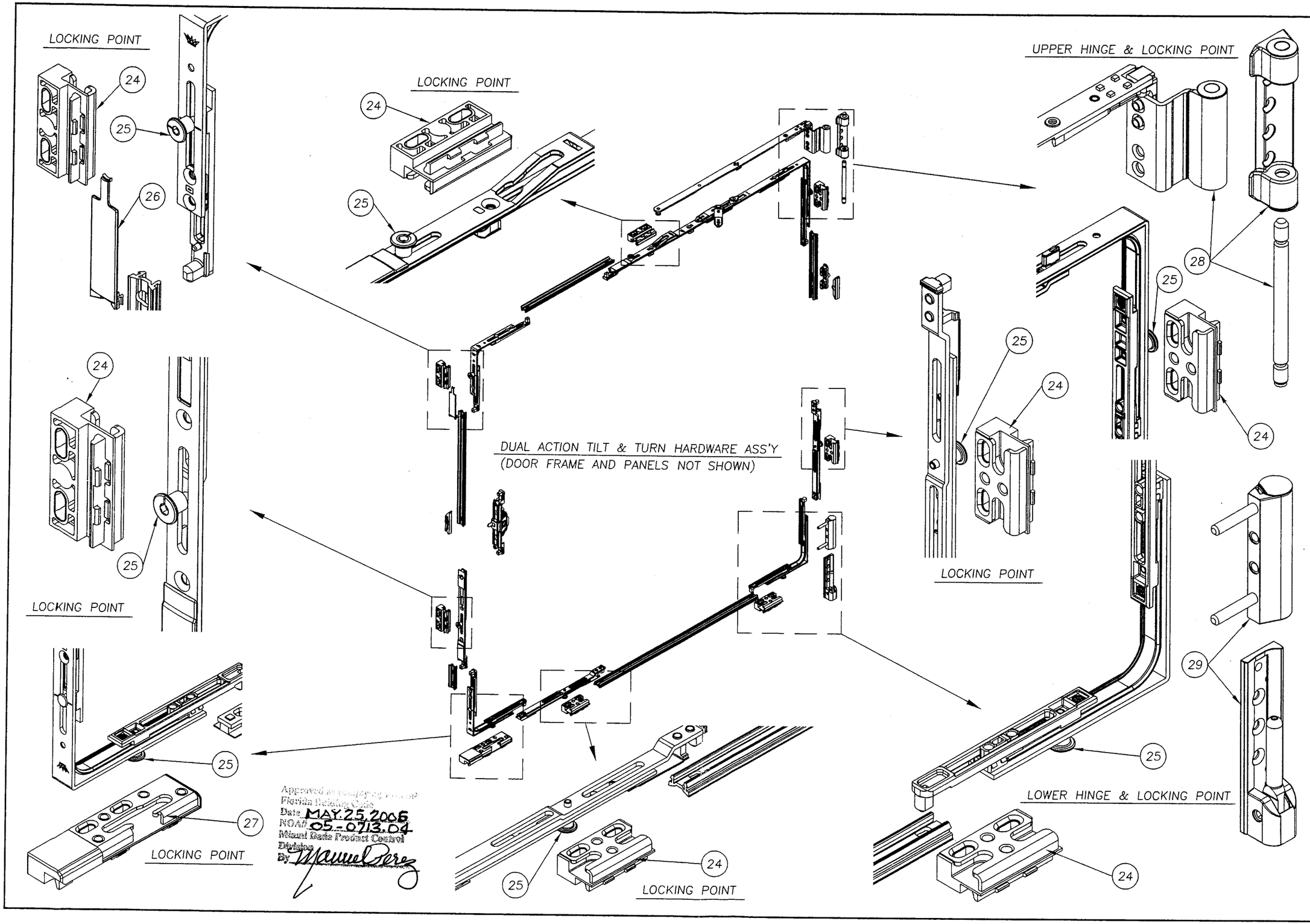

Approved as complying with the Florida Building Code
Date MAY 25, 2006
NOA# 05-0713.04
Miami Dade Product Control Division
By Manuel Perez

Documents Prepared By:
RW BUILDING CONSULTANTS, INC.
P.O. Box 230 Valrico FL. 33595
Phone No.: 813.659.9197
Florida Board of Professional Engineers
Certificate Of Authorization No. 9813
Lyndon, F. Schmidt, P.E. No. 43409

PRODUCT: CORONA AS60 EXTRUDED VINYL DUAL ACTION "IMPACT" DOOR

PART OR ASSEMBLY: TILT AND TURN HARDWARE ASS'Y AND LOCKING POINT DETAILS

NO.	DATE	REVISIONS	BY
2	9/28/05	ADDED SWING & TILT INDICATORS	WWH
1	7/25/05	PER DADE COMMENTS	EW

DATE: 4/28/05
SCALE: NONE
DWG. BY: EW
CHK. BY: LFS
DRAWING NO.: S-2542
SHEET 4 OF 5

R:\PROJ 500 - 650\PF571\S-2542-REV-2\S-2542-4.DWG

ITEM	DESCRIPTION	MATERIAL
1	MAIN FRAME 2.362" X 2.677" PVC #8603 by Regal Plastics*	VINYL
2	STILES & RAILS 2.362" X 3.150" PVC #8607 by Regal Plastics *	VINYL
3	GLASS STOP .77" X 79" PVC #8605 by Regal Plastics *	VINYL
4	INNER WEATHER SEAL – EPDM	FOAM
5	OUTER WEATHER SEAL – EPDM	FOAM
6	REINFORCEMENT 1.024" X 1.30" #202446	STEEL
7	REINFORCEMENT .98" X 1.57" #202570	STEEL
8	THERMOPLASTIC GLAZING SPACER	TPS
9	13/16" INSULATED GLASS INTERLAYER BY SOLUTIA 1/8" TEMP. – SPACE – 1/8" H.S.– 0.090 PVB – 1/8" H.S.	BUTYL VINYL
10	NOT USED	–
11	#8 X 7/8" PHILLIPS PAN HEAD SHEET METAL SCREW	STEEL
12	MASONRY	CONCRETE
13	OUTER GLAZING GASKET	EPDM
14	DOW SILICONE #995	SILICONE
15	SETTING BLOCK	NEOPRENE
16	#10 X 3" PPH SHEET METAL SCREW	STEEL
17	#10 X 1–1/2" PPH SHEET METAL SCREW	STEEL
18	ANCHOR CLIP	STEEL
19	NOT USED	–
20	2X BUCK	WOOD
21	#8 X 1–1/2" PFH SELF DRILLING SCREW	STEEL
22	1/4" SHIM	WOOD
23	1/4" X 3–1/4" TAPCON	STEEL
24	LOCK BLOCK	VINYL
25	MUSHROOM LOCKING PIN	STEEL
26	LOCK SLIDE	VINYL
27	CORNER LOCK BLOCK	VINYL
28	TURN HINGE ASSEMBLY	STEEL
29	TILT AND TURN HINGE ASSEMBLY	STEEL

* THE APPROVED WHITE RIGID PVC EXTERIOR EXTRUSIONS FOR WINDOWS ARE TO BE PRODUCED BY EXTRUDERS LICENSEES IN "AAMA CERTIFICATION PROGRAMS FOR RIGID PVC EXTRUSIONS" AND HAVE A CURRENT MIAMI–DADE COUNTY NOA.

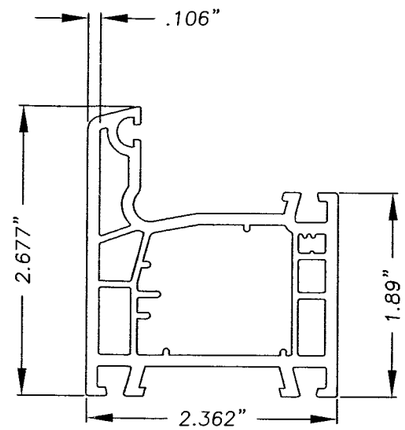

1 MAIN FRAME
P/N 8603

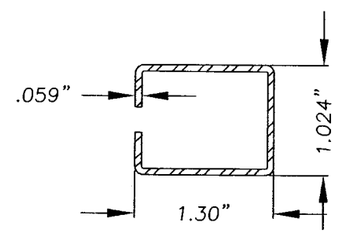

6 REINFORCEMENT
P/N 202446

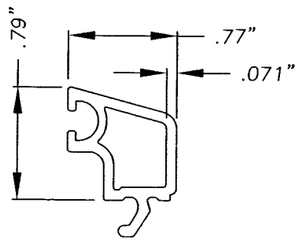

3 GLASS STOP
P/N 8605

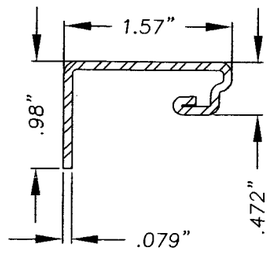

7 REINFORCEMENT
P/N 202570

5 OUTER SEAL

4 INNER SEAL

13 OUTER GLAZING GASKET

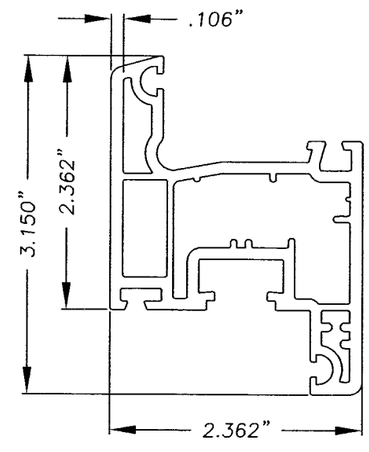

2 STILES & RAILS
P/N 8607

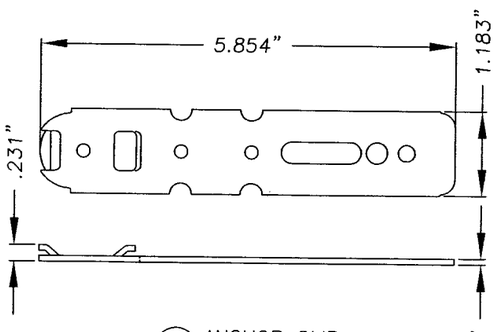

18 ANCHOR CLIP

Approved as meeting requirements with the Florida Building Code
Date MAY 25 2006
NOA# 05-0713.04
Miami Dade Product Control
Decision
By

Documents Prepared By:
RW BUILDING CONSULTANTS, INC.
P.O. Box 230 Valrico FL. 33595
Phone No.: 813.659.9197
Florida Board of Professional Engineers
Certificate Of Authorization No. 9813
Lyndon, F. Schmidt, P.E. No. 43409

PRODUCT: CORONA AS60 EXTRUDED VINYL DUAL ACTION "IMPACT" DOOR

PART OR ASSEMBLY: BILL OF MATERIAL & COMPONENTS

NO.	DATE	REVISIONS	BY
2	9/28/05	ADDED SWING & TILT INDICATORS	WWH
1	7/28/05	PER DADE COMMENTS	EW

DATE: 04/28/05
SCALE: N.T.S.
DWG. BY: EW
CHK. BY: LFS
DRAWING NO.: S–2542
SHEET 5 OF 5

R:\PROJ 500 - 650\PF571\S-2542-REV-2\S-2542-5.DWG