MIAMI-DADE COUNTY

BUILDING CODE COMPLIANCE OFFICE (BCCO)
PRODUCT CONTROL DIVISION

MIAMI-DADE COUNTY, FLORIDA
METRO-DADE FLAGLER BUILDING
140 WEST FLAGLER STREET, SUITE 1603
MIAMI, FLORIDA 33130-1563
(305) 375-2901 FAX (305) 375-2908
www.buildingcodeonline.com

NOTICE OF ACCEPTANCE (NOA)

Schuco USA, L.P.
240 Pane Road
Newington, CT 06111

SCOPE:

This NOA is being issued under the applicable rules and regulations governing the use of construction materials. The documentation submitted has been reviewed by Miami-Dade County Product Control Division and accepted by the Board of Rules and Appeals (BORA) to be used in Miami Dade County and other areas where allowed by the Authority Having Jurisdiction (AHJ).

This NOA shall not be valid after the expiration date stated below. The Miami-Dade County Product Control Division (In Miami Dade County) and/or the AHJ (in areas other than Miami Dade County) reserve the right to have this product or material tested for quality assurance purposes. If this product or material fails to perform in the accepted manner, the manufacturer will incur the expense of such testing and the AHJ may immediately revoke, modify, or suspend the use of such product or material within their jurisdiction. BORA reserves the right to revoke this acceptance, if it is determined by Miami-Dade County Product Control Division that this product or material fails to meet the requirements of the applicable building code.

This product is approved as described herein, and has been designed to comply with the Florida Building Code, including the High Velocity Hurricane Zone.

DESCRIPTION: "Hurricane Force 5 Corona AS60" Outswing White PVC French Door – L.M.I.

APPROVAL DOCUMENT: Drawing No. **S-2550**, titled "Hurricane Force "V" Vinyl Swing Door Single & French Door "Impact"", sheets 1 through 10 of 10, dated 05/24/05 with revision #3 dated 10/19/05, prepared by RW Building Consultants, Inc., signed and sealed by Lyndon F. Schmidt, P.E., bearing the Miami-Dade County Product Control Approval stamp with the Notice of Acceptance number and approval date by the Miami-Dade County Product Control Division.

MISSILE IMPACT RATING: Large and Small Missile Impact Resistant

LABELING: Each unit shall bear a permanent label with the manufacturer's name or logo, city, state and following statement: "Miami-Dade County Product Control Approved", unless otherwise noted herein.

RENEWAL of this NOA shall be considered after a renewal application has been filed and there has been no change in the applicable building code negatively affecting the performance of this product.

TERMINATION of this NOA will occur after the expiration date or if there has been a revision or change in the materials, use, and/or manufacture of the product or process. Misuse of this NOA as an endorsement of any product, for sales, advertising or any other purposes shall automatically terminate this NOA. Failure to comply with any section of this NOA shall be cause for termination and removal of NOA.

ADVERTISEMENT: The NOA number preceded by the words Miami-Dade County, Florida, and followed by the expiration date may be displayed in advertising literature. If any portion of the NOA is displayed, then it shall be done in its entirety.

INSPECTION: A copy of this entire NOA shall be provided to the user by the manufacturer or its distributors and shall be available for inspection at the job site at the request of the Building Official.

This NOA consists of this page 1 and evidence page E-1, as well as approval document mentioned above.

The submitted documentation was reviewed by **Manuel Perez, P.E.**

PRODUCT CONTROL ACCEPTED

Schuco USA, L.P.

NOTICE OF ACCEPTANCE: EVIDENCE SUBMITTED

A. DRAWINGS

1. Manufacturer's die drawings and sections.
2. Drawing No **S-2550**, Sheets 1 through 10 of 10, titled "Hurricane Force "V" Vinyl Swing Door Single & French Door Impact", dated 05/24/05 with revision #3 dated 10/19/05, prepared by RW Building Consultants, Inc., signed and sealed by Lyndon F. Schmidt, P.E.

B. TESTS

1. Test reports on 1) Air Infiltration Test, per FBC, TAS 202-94
   2) Uniform Static Air Pressure Test, Loading per FBC TAS 202-94
   3) Water Resistance Test, per FBC, TAS 202-94
   4) Large Missile Impact Test per FBC, TAS 201-94
   5) Cyclic Wind Pressure Loading per FBC, TAS 203-94
   6) Forced Entry Test, per FBC 3603.2 (b) and TAS 202-94

   along with marked-up drawings and installation diagram of white PVC French door, prepared by Testing Evaluation Laboratories, Inc., Test Report No. **TEL-05-0119.03**, dated 05/05/-10/05, signed and sealed by Wendell W. Haney.

C. CALCULATIONS

1. Anchor verification calculations and structural analysis, complying with FBC-2004, dated 06/01/05, revised on 5/23/06, prepared by RW Building Consultants, Inc., signed and sealed by Lyndon F. Schmidt, P.E.
   Complies with ASTM E1300-98

D. QUALITY ASSURANCE

1. Miami Dade Building Code Compliance Office (BCCO).

E. MATERIAL CERTIFICATIONS

1. Notice of Acceptance No. **98-0608.03** issued to E.I. DuPont DeNemours for "**Sentry Glass Plus**" dated 01/14/99, expiring on 01/14/02.
2. Notice of Acceptance No. **06-0103.01** issued to Regal Plastic Co. for their "**White PVC Exterior Extrusions for Windows and Doors**" dated 05/25/06, expiring on 05/25/11.

F. STATEMENTS

1. Statement letter of conformance and no financial interest, dated May 31, 2005, signed and sealed by Lyndon Schmidt, P.E.
2. Statement letter of no financial interest, dated May 12, 2005, signed by Matthias Ruehr, P.E.

G. OTHER

1. Letter from the consultant stating that the product is compliance with the Florida Building Code (FBC).

Manuel Perez, P.E.
Product Control Examiner
NOA No 05-0715.02
Expiration Date: May 25, 2011
Approval Date: May 25, 2006

SCHÜCO USA
Schüco USA, L.P.
240 Pane Road Newington, CT 06111
PH. 860.666.0505 / FAX. 860.666.1695

CORONA AS60
VINYL SWING & FRENCH DOOR
OUTSWING "IMPACT" DOOR

Hurricane FORCE V™

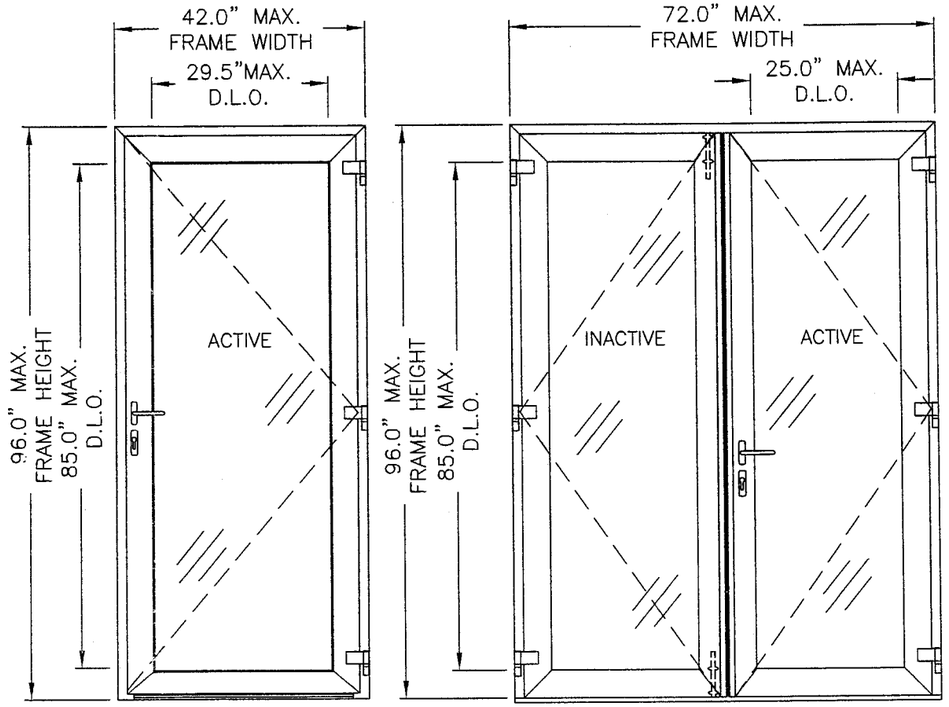

OUTSWING SINGLE DOOR

OUTSWING DOUBLE DOOR

GENERAL NOTES

1. THIS PRODUCT HAS BEEN EVALUATED AND IS IN COMPLIANCE WITH THE FLORIDA BUILDING CODE INCLUDING THE "HIGH VELOCITY HURRICANE ZONE".
2. PRODUCT ANCHORS SHALL BE AS LISTED AND SPACED AS SHOWN ON DETAILS. ANCHOR EMBEDMENT TO BASE MATERIAL SHALL BE BEYOND WALL DRESSING OR STUCCO.
3. WHEN USED IN THE "HIGH VELOCITY HURRICANE ZONE" THIS PRODUCT COMPLIES WITH SECTION 1626 OF THE FLORIDA BUILDING CODE AND DOES NOT REQUIRE AN IMPACT RESISTANT COVERING.
4. THIS PRODUCT DOES NOT MEET THE REQUIREMENTS FOR ENHANCED PROTECTION OF : ESSENTIAL FACILITIES AS DEFINED IN ASTM E1996.
5. FOR 2X STUD FRAMING CONSTRUCTION, THE ANCHORING OF THESE UNITS SHALL BE THE SAME AS THAT SHOWN FOR 2X BUCK MASONRY CONSTRUCTION.
6. CONDITIONS NOT COVERED BY THIS DRAWING ARE SUBJECT TO FURTHER ENGINEERING ANALYSIS.
7. WOOD BUCKS BY OTHERS, MUST BE ANCHORED PROPERLY TO TRANSFER LOADS TO STRUCTURE AND TO BE REVIEWED BY BUILDING OFFICIAL.
8. FOR DESIGN PRESSURE RATING SEE CHART THIS SHEET.

TABLE OF CONTENTS

SHEET #	DESCRIPTION
1	TYPICAL ELEVATIONS, DESIGN PRESSURE & GENERAL NOTES
2	HORIZONTAL CROSS SECTION & ALTERNATIVE CLIP DETAIL (SINGLE DOOR)
3	VERTICAL CROSS SECTION (SINGLE DOOR)
4	HORIZONTAL CROSS SECTION (FRENCH DOOR)
5	VERTICAL CROSS SECTION (FRENCH DOOR)
6	ANCHORING – (SINGLE DOOR)
7	ANCHORING – (FRENCH DOOR)
8	ANCHORING – (FRENCH DOOR)
9	COMPONENTS
10	BILL OF MATERIALS & GLAZING DETAILS

DESIGN PRESSURE RATINGS (PSF)

OVERALL FRAME DIMENSION	OVERALL DAYLIGHT DIMENSION	GLASS TYPE	MEETS WATER INFILTRATION		* DOES NOT MEET WATER INFILTRATION	
			POSITIVE	NEGATIVE	POSITIVE	NEGATIVE
42.0" x 96.0"	29.5" x 85.0"	GLASS TYPE I SEE GLAZING DETAIL SHEET 10	+50.0	−50.0	+65.0	−65.0
42.0" x 96.0"	29.5" x 85.0"	GLASS TYPE II SEE GLAZING DETAIL SHEET 10	+50.0	−50.0	+50.0	−50.0
72.0" X 96.0"	25.0" X 85.0"	GLASS TYPE I SEE GLAZING DETAIL SHEET 10	N/A	N/A	+55.0	−55.0
72.0" X 96.0"	25.0" X 85.0"	GLASS TYPE II SEE GLAZING DETAIL SHEET 10	N/A	N/A	+50.0	−50.0

* UNIT SHALL BE INSTALLED ONLY AT LOCATIONS PROTECTED BY AN OVERHANG OR CANOPY SUCH THAT THE ANGLE BETWEEN THE EDGE OF CANOPY OR OVERHANG TO SILL IS LESS THEN 45 DEGREES.

Approved as complying with the Florida Building Code
Date MAY 25, 2006
NOA# 05-0715.02
Miami Dade Product Control Division
By

Documents Prepared By:
RW BUILDING CONSULTANTS, INC.
P.O. Box 230 Valrico FL. 33595
Phone No.: 813.659.9197
Florida Board of Professional Engineers
Certificate Of Authorization No. 9813
Lyndon, F. Schmidt, P.E. No. 43409

PRODUCT: HURRICANE FORCE "V" VINYL SWING DOOR SINGLE & FRENCH DOOR "IMPACT"

PART OR ASSEMBLY: TYPICAL ELEVATIONS, DESIGN PRESSURE & GENERAL NOTES

REVISIONS

NO.	DATE		BY
3	10/19/05	REVISED PER DADE LETTER	EW
2	09/29/05	ADDED SWING INDICATION	EW
1	7/25/05	PER DADE COMMENTS	EW

DATE: 05/24/05
SCALE: N.T.S.
DWG. BY: EW
CHK. BY: LFS
DRAWING NO.: S-2550
SHEET 1 OF 10

R:\PROJ 650 - 800\FF761\S-2550-REV-3\S-2550-1.DWG

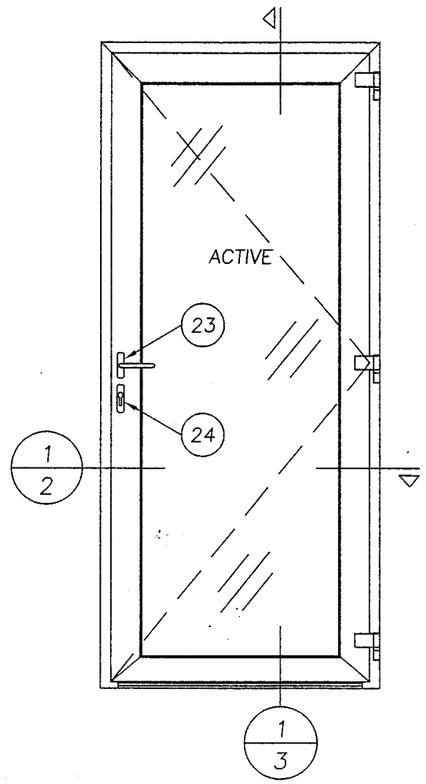

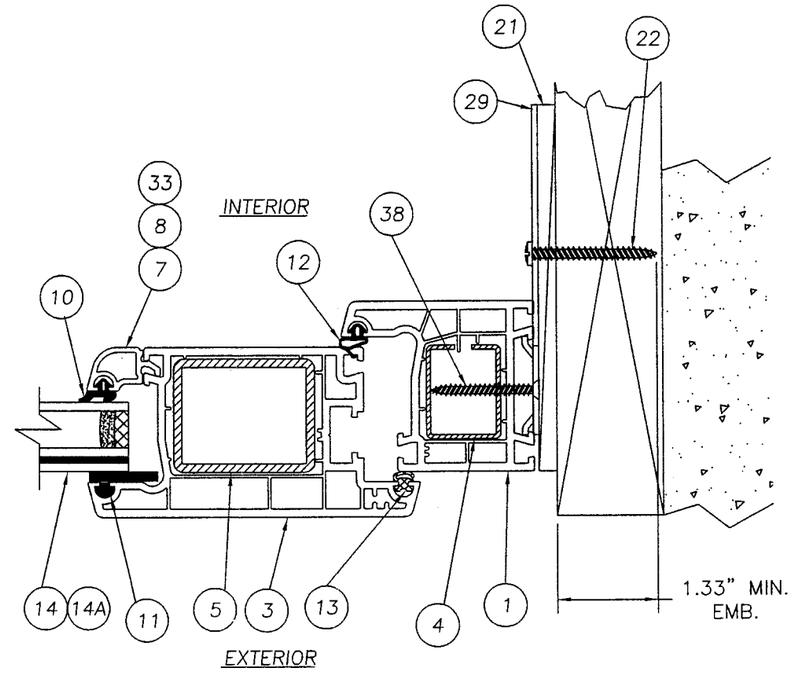

ALTERNATE ANCHOR
CLIP DETAIL

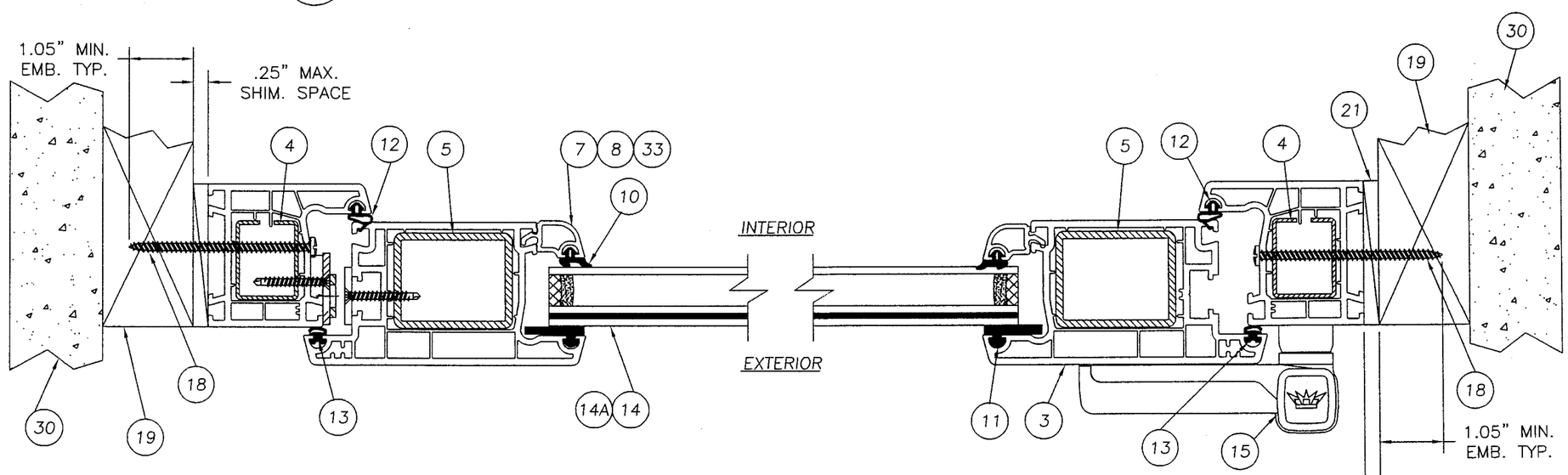

1/2 HORIZONTAL CROSS SECTION

Approved as complying with the Florida Building Code
Date MAY 25 2006
NOA# 05-0715.02
Miami Dade Product Control
Engineer
By

Documents Prepared By:
RW BUILDING CONSULTANTS, INC.
P.O. Box 230 Valrico FL. 33595
Phone No.: 813.659.9197
Florida Board of Professional Engineers
Certificate Of Authorization No. 9813
Lyndon, F. Schmidt, P.E. No. 43409

PRODUCT:
HURRICANE FORCE "V"
VINYL SWING DOOR "SINGLE & FRENCH DOOR "IMPACT"

PART OR ASSEMBLY:
HORIZONTAL CROSS SECTION
SINGLE DOOR

NO.	DATE	REVISIONS	BY
3	10/19/05	REVISED PER DADE LETTER	EW
2	09/29/05	ADDED SWING INDICATION	EW
1	7/25/05	PER DADE COMMENTS	EW

DATE: 05/24/05
SCALE: N.T.S.
DWG. BY: EW
CHK. BY: LFS
DRAWING NO.: S-2550
SHEET 2 OF 10

R:\PROJ 650 - 800\PF761\S-2550-REV-3\S-2550-2.DWG

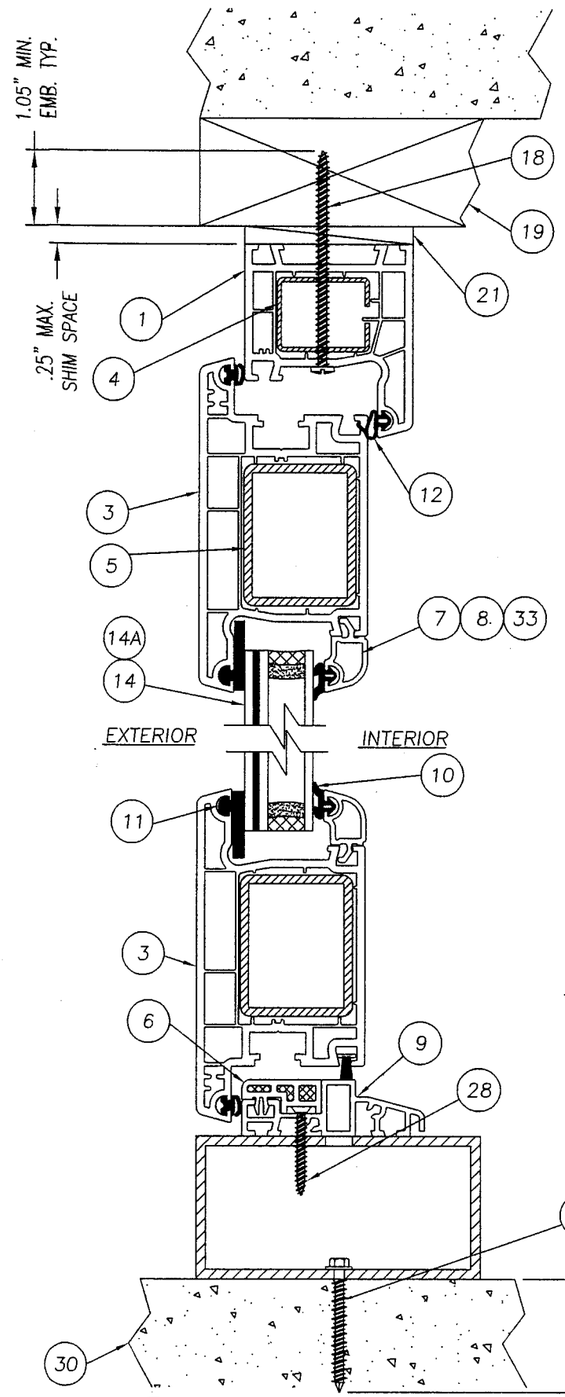

1/3 VERTICAL CROSS SECTION W/ 2" ALUMINUM TUBING

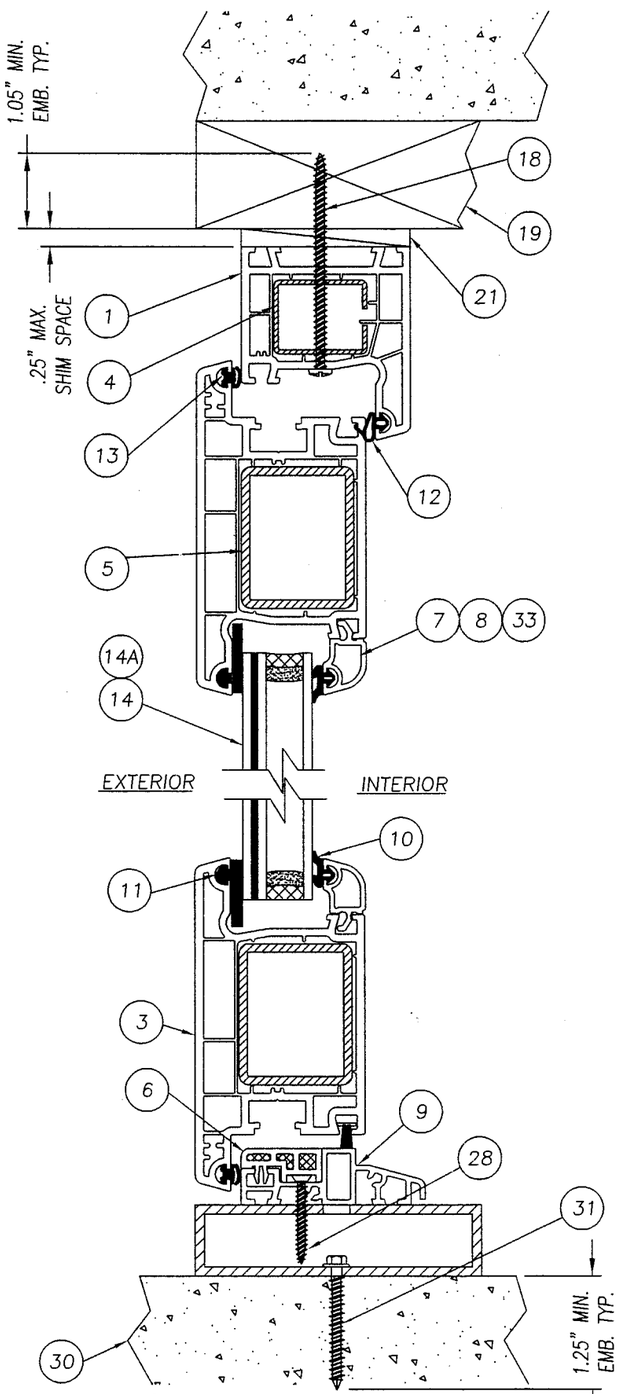

1/3 VERTICAL CROSS SECTION W/ 1" ALUMINUM TUBING

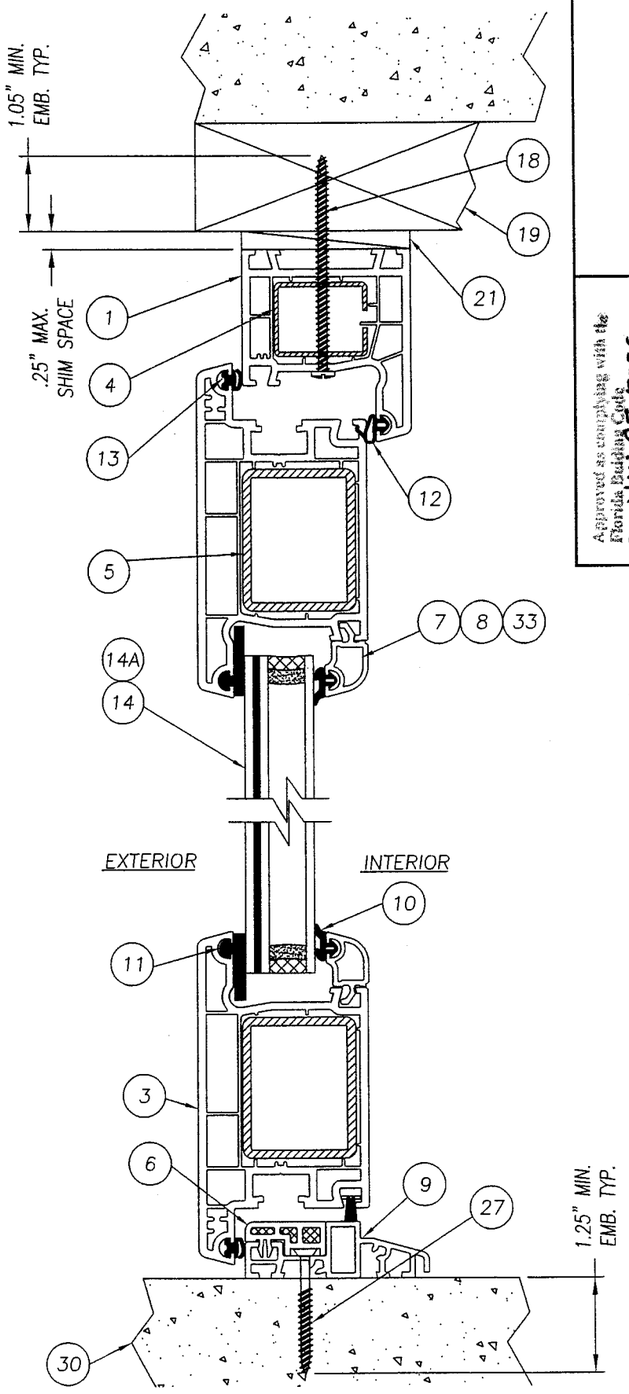

1/3 VERTICAL CROSS SECTION

Approved as complying with the Florida Building Code
Date MAY 25 2006
NOA# 05-0715.02
Miami Dade Product Control Division
By

Documents Prepared By:

RM BUILDING CONSULTANTS, INC.
P.O. Box 230 Valrico FL. 33595
Phone No.: 813.659.9197

Florida Board of Professional Engineers
Certificate Of Authorization No. 9813

Lyndon, F. Schmidt, P.E. No. 43409

PRODUCT:
HURRICANE FORCE "V"
VINYL SWING DOOR "SINGLE & FRENCH DOOR "IMPACT"

PART OR ASSEMBLY:
VERTICAL CROSS SECTIONS SINGLE DOOR

NO.	DATE	REVISIONS	BY
3	10/19/05	REVISED PER DADE LETTER	EW
2	09/29/05	ADDED SWING INDICATION	EW
1	7/25/05	PER DADE COMMENTS	EW

DATE: 05/24/05
SCALE: N.T.S.
DWG. BY: EW
CHK. BY: LFS
DRAWING NO.: S-2550
SHEET 3 OF 10

R:\PROJ 650 - 800\PF761\S-2550-REV-3\S-2550-3.DWG

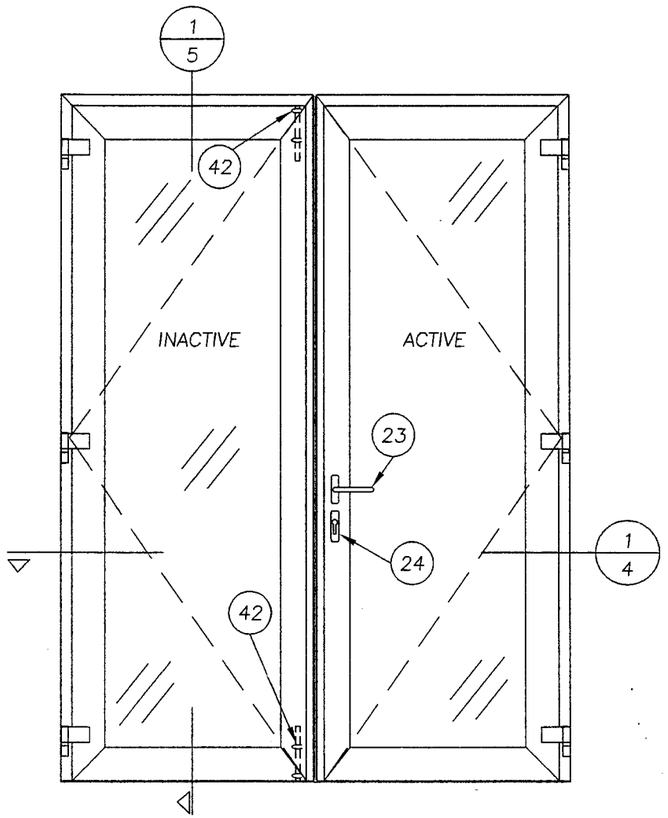

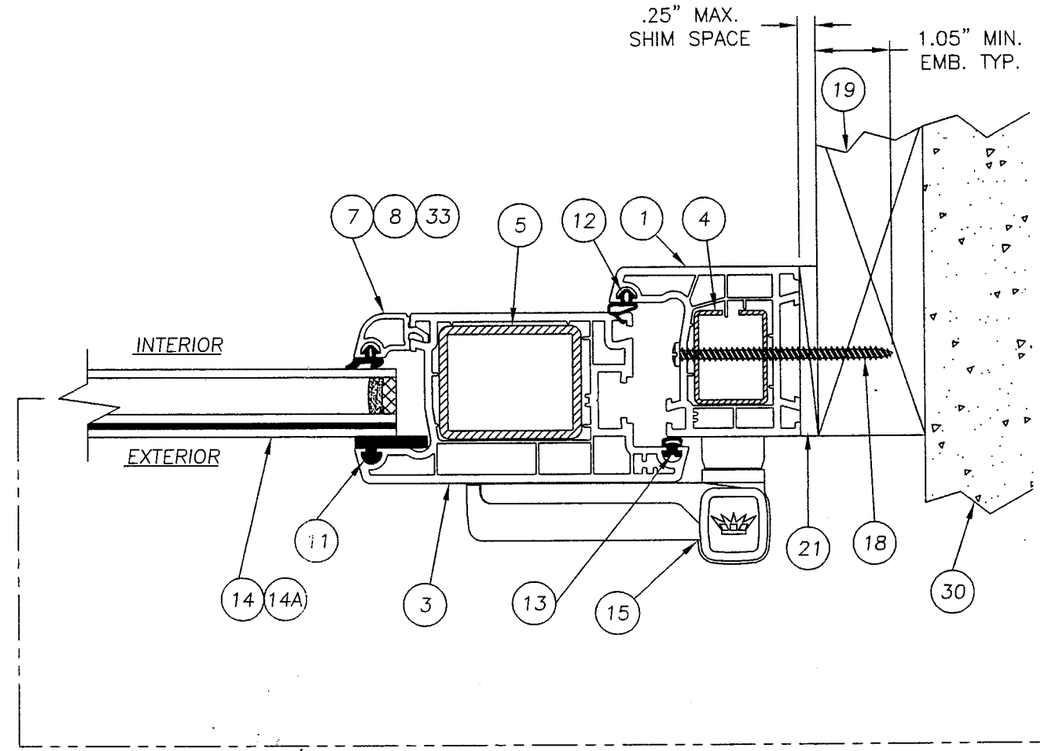

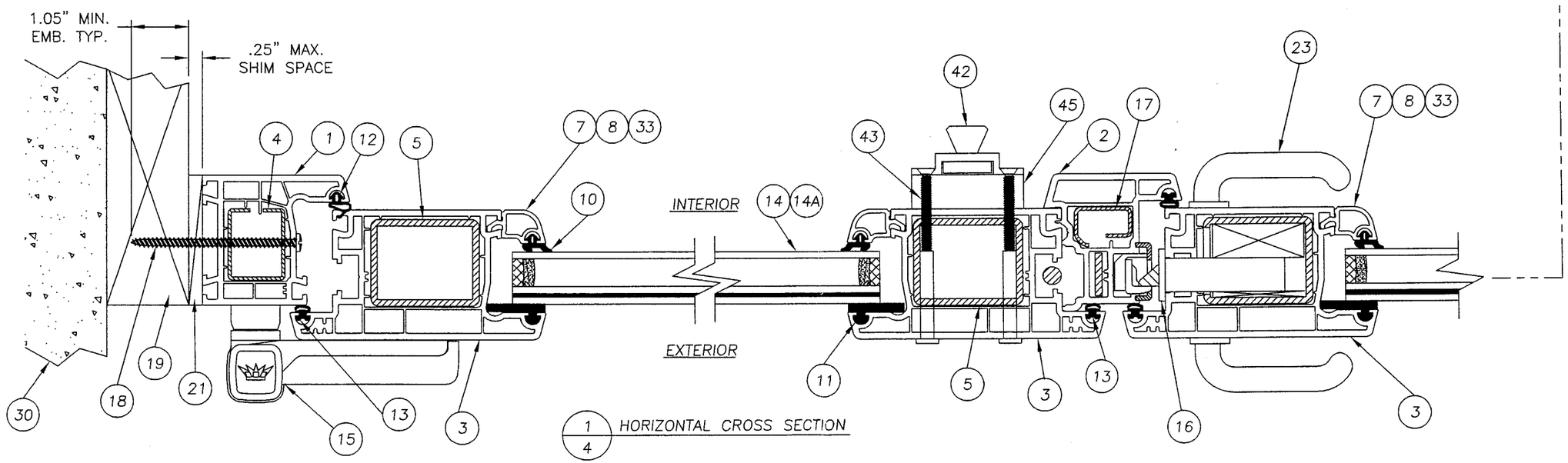

1/4 HORIZONTAL CROSS SECTION

Approved as complying with the Florida Building Code
Date MAY 25, 2006
NOA# 05-0715.02
Miami Dade Product Control Division
By

Documents Prepared By:
BUILDING CONSULTANTS, INC.
P.O. Box 230 Valrico FL. 33595
Phone No.: 813.659.9197
Florida Board of Professional Engineers
Certificate Of Authorization No. 9818
Lyndon, F. Schmidt, P.E. No. 43409

PRODUCT:
HURRICANE FORCE "V"
VINYL SWING DOOR SINGLE &
FRENCH DOOR "IMPACT"

PART OR ASSEMBLY:
HORIZONTAL CROSS SECTION
FRENCH DOOR

REVISIONS

NO.	DATE		BY
3	10/19/05	REVISED PER DADE LETTER	EW
2	09/29/05	ADDED SWING INDICATION	EW
1	7/25/05	PER DADE COMMENTS	EW

DATE: 05/24/05
SCALE: N.T.S.
DWG. BY: EW
CHK. BY: LFS
DRAWING NO.: S-2550
SHEET 4 OF 10

R:\PROJ 650 - 800\PF761\S-2550-REV-3\S-2550-4.DWG

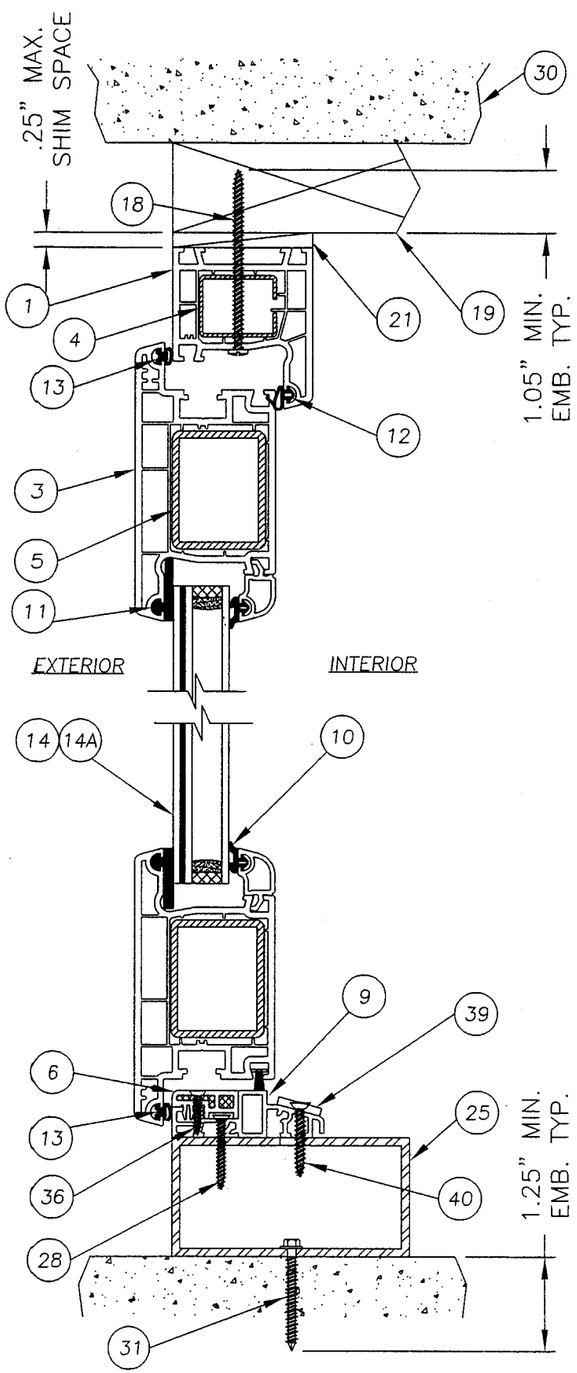

1/5 VERTICAL CROSS SECTION
SHOWN WITH ALUM. 2 X 4

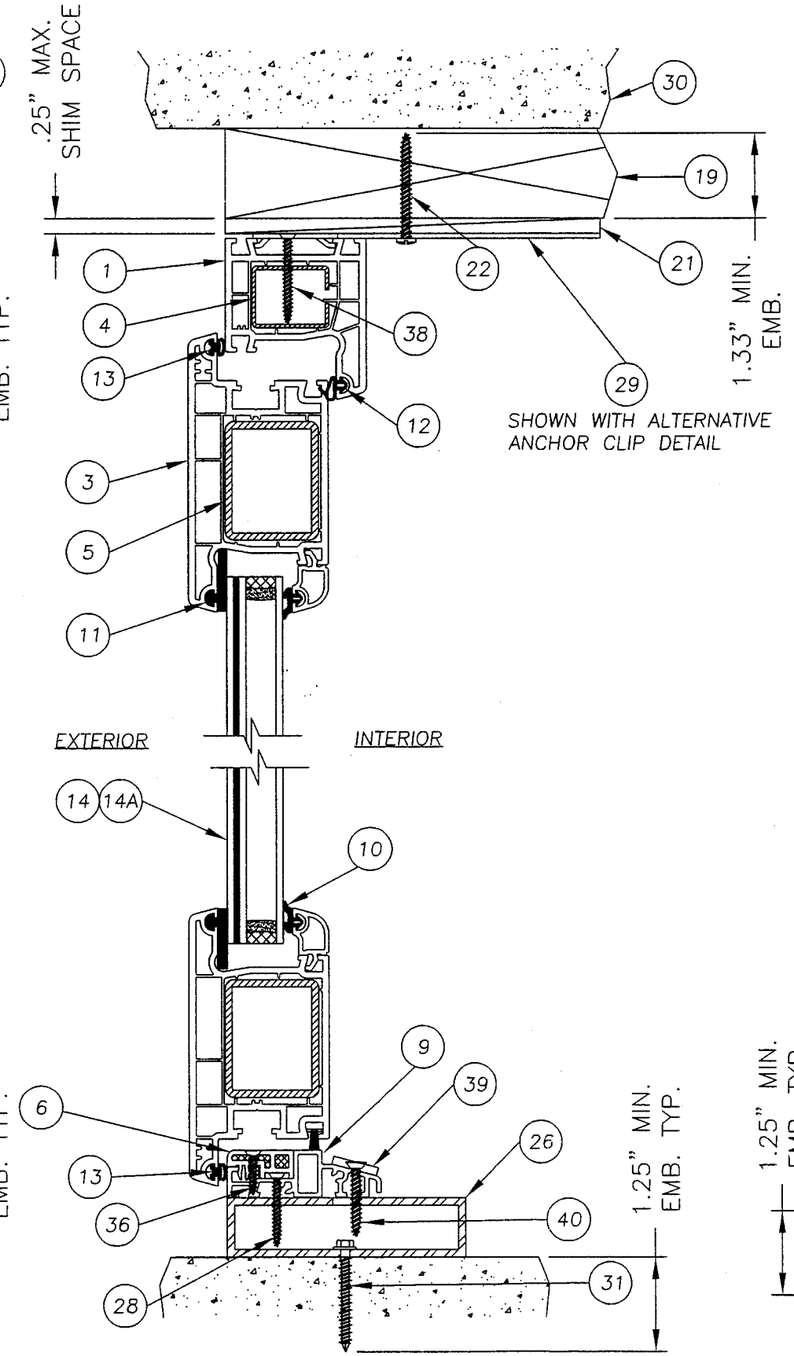

1/5 VERTICAL CROSS SECTION
SHOWN WITH ALUM. 1 X 4

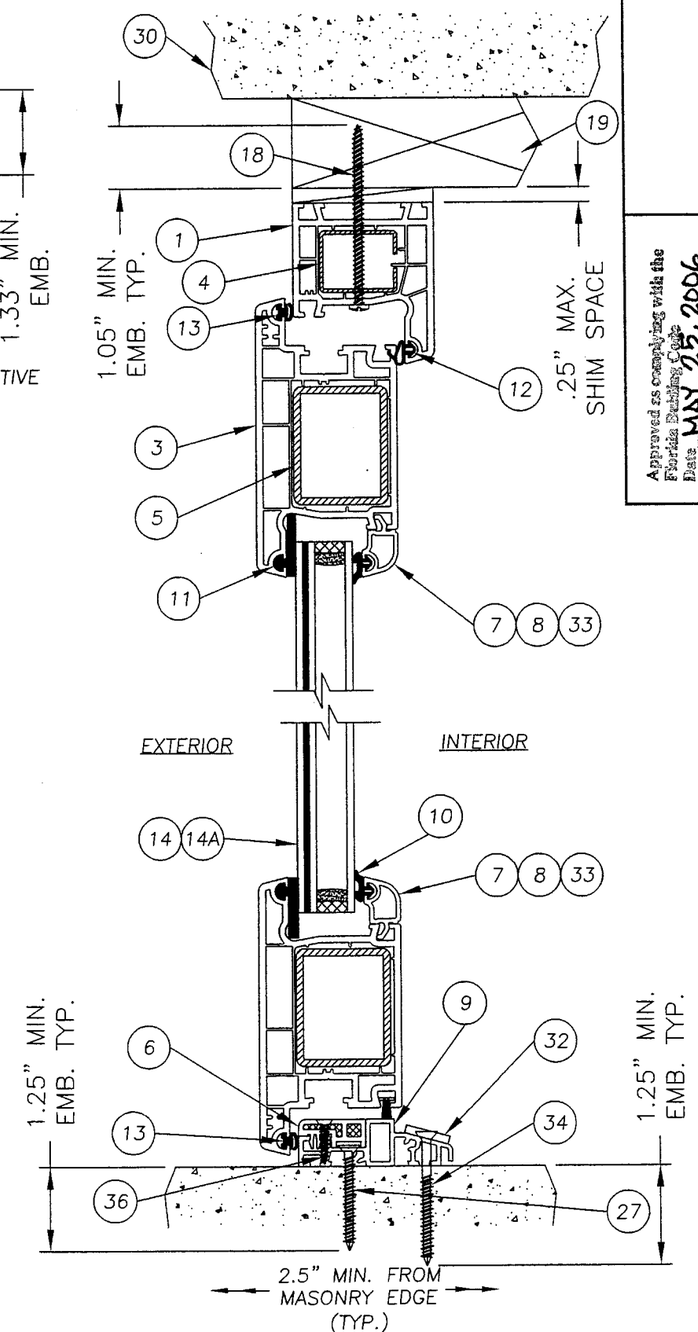

1/5 VERTICAL CROSS SECTION

Approved as complying with the Florida Building Code
Date MAY 23 2006
NOA# 05-0715.02
Miami Dade Product Control Division
By

Documents Prepared By:
RW BUILDING CONSULTANTS, INC.
P.O. Box 230 Valrico FL. 33595
Phone No.: 813.658.9197
Florida Board of Professional Engineers
Certificate Of Authorization No. 9813
11.2.05
Lyndon, F. Schmidt, P.E. No. 43409

PRODUCT:
HURRICANE FORCE "V"
VINYL SWING DOOR, SINGLE & FRENCH DOOR "IMPACT"

PART OR ASSEMBLY:
VERTICAL CROSS SECTIONS FRENCH DOOR

REVISIONS

NO.	DATE		BY
3	10/19/05	REVISED PER DADE LETTER	EW
2	09/29/05	ADDED SWING INDICATION	EW
1	7/25/05	PER DADE COMMENTS	EW

DATE: 05/24/05
SCALE: N.T.S.
DWG. BY: EW
CHK. BY: LFS
DRAWING NO.: S-2550
SHEET 5 OF 10

R:\PROJ 650 - 800\PF761\S-2550-REV-3\S-2550-5.DWG

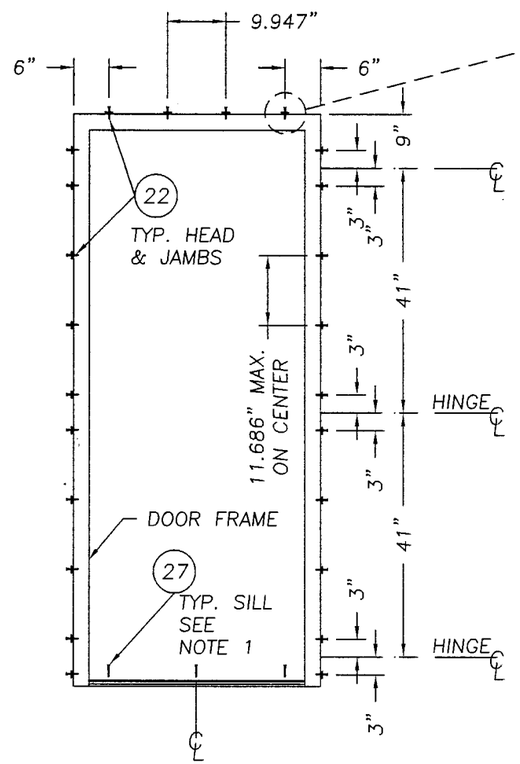

FRAME ANCHORING USING ALT. ANCHORING CLIP
(DOOR PANEL REMOVED FOR CLARITY)

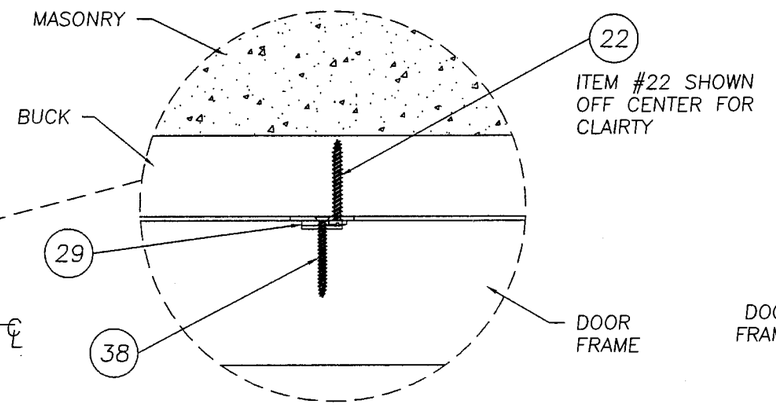

SEE ALTERNATE ANCHOR CLIP DETAIL SHEET 2

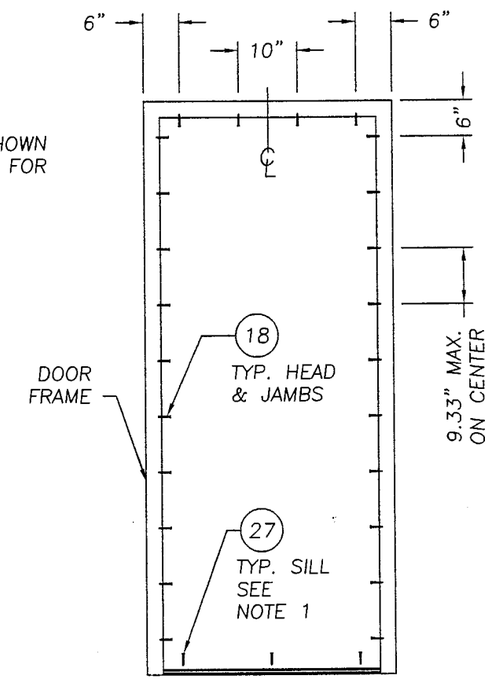

DOOR ANCHORING USING FASTENER THROUGH FRAME
(DOOR PANEL REMOVED FOR CLARITY)

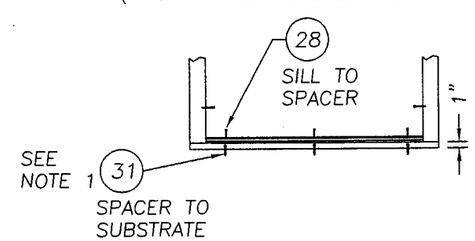

FRAME ANCHORING
SHOWN WITH 1" SUBSTRATE SPACER

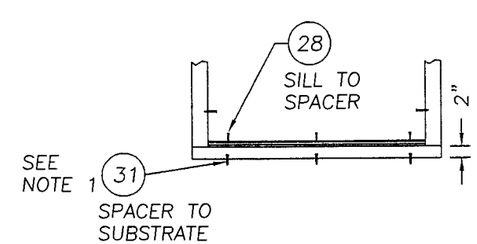

FRAME ANCHORING
SHOWN WITH 2" SUBSTRATE SPACER

NOTES:

1. 1/4" TAPCONS REQUIRE A MINIMUM 2.5" CLEARANCE TO MASONRY EDGES AND A MINIMUM 3" CLEARANCE TO ADJACENT TAPCONS.

Approved as complying with the Florida Building Code
Date MAY 25 2006
NOAA 05-0715.02
Miami Dade Product Control
Division
By

Documents Prepared By:
RW BUILDING CONSULTANTS, INC.
P.O. Box 230 Valrico FL. 33595
Phone No.: 813.659.9197
Florida Board of Professional Engineers
Certificate Of Authorization No. 9813
Lyndon, F. Schmidt, P.E. No. 43409

PRODUCT: HURRICANE FORCE "V" VINYL SWING DOOR SINGLE & FRENCH DOOR "IMPACT"

PART OR ASSEMBLY: FRAME ANCHORING SINGLE DOOR

REVISIONS

NO.	DATE		BY
3	10/19/05	REVISED PER DADE LETTER	EW
2	09/29/05	ADDED SWING INDICATION	EW
1	7/25/05	PER DADE COMMENTS	EW

DATE: 05/24/05
SCALE: N.T.S.
DWG. BY: EW
CHK. BY: LFS
DRAWING NO.: S-2550
SHEET 6 OF 10

R:\PROJ 650 - 800\PF761\S-2550-REV-3\S-2550-6.DWG

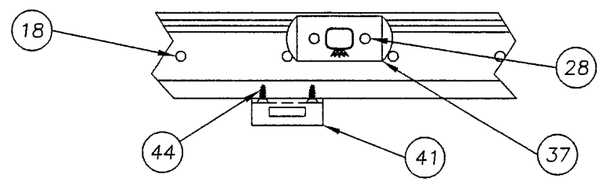

DETAIL 1
ASTRAGAL BOLT & SURFACE BOLT STRIKE ANCHORING AT HEADER

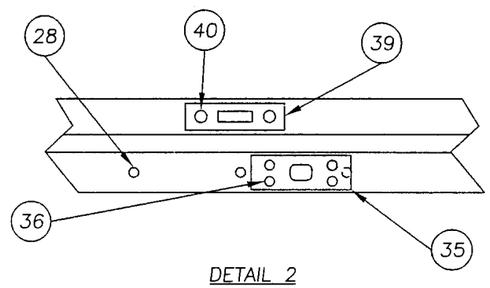

DETAIL 2
ASTRAGAL BOLT & SURFACE BOLT STRIKE ANCHORING AT SILL
SEE SECTION (1/5) WITH 1"x4" OR 2"x4" ALUM. SUBSTRATE SPACER

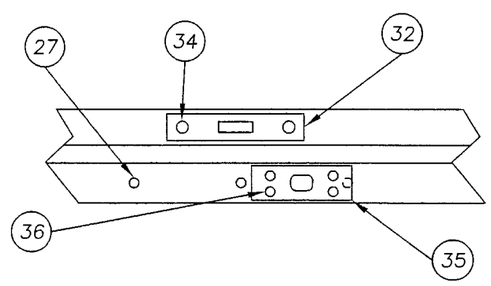

DETAIL 3
ASTRAGAL BOLT & SURFACE BOLT STRIKE ANCHORING AT SILL
SEE SECTION (1/5) W/O SUBSTRATE SPACE

NOTES:

1. 1/4" TAPCONS REQUIRE A MINIMUM 2.5" CLEARANCE TO MASONRY EDGES AND A MINIMUM 3" CLEARANCE TO ADJACENT TAPCONS.

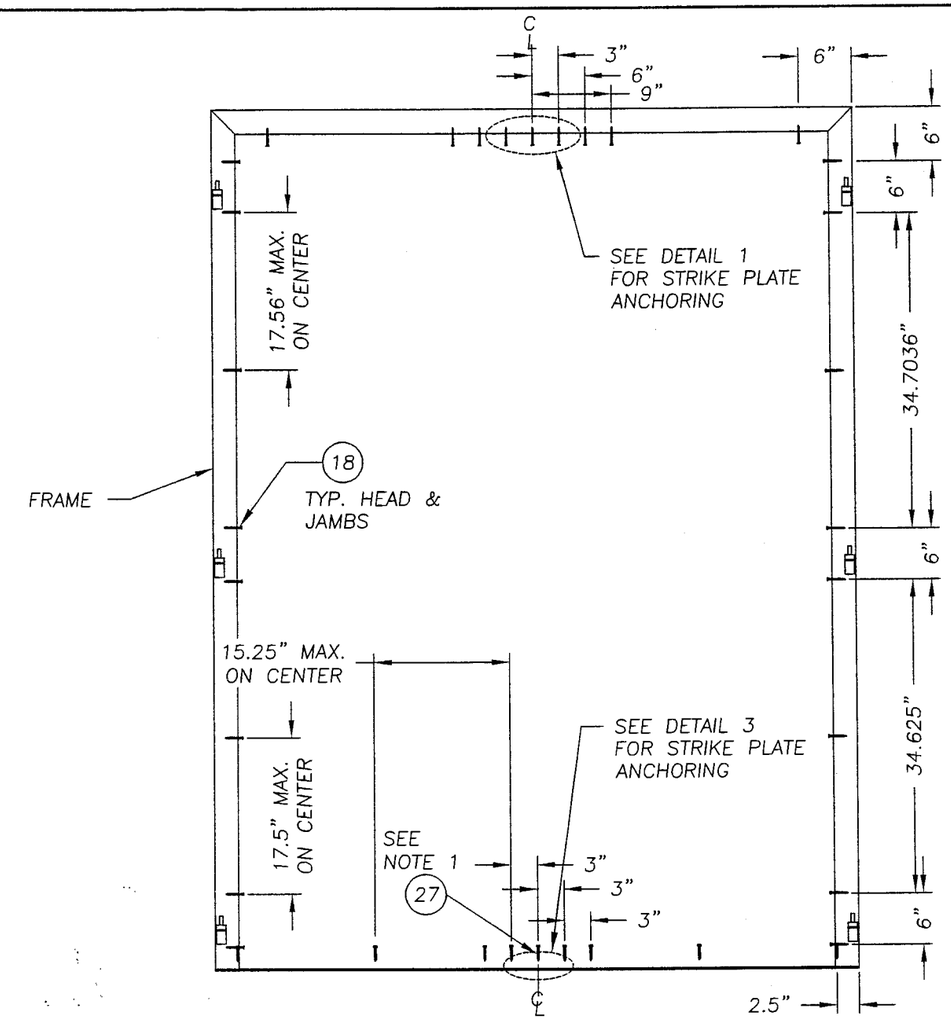

FRAME ANCHORING USING FASTENER THROUGH FRAME
(DOOR PANELS REMOVED FOR CLARITY)

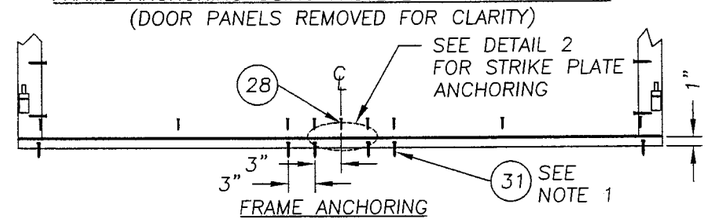

FRAME ANCHORING
SHOWN WITH 1" SUBSTRATE SPACER

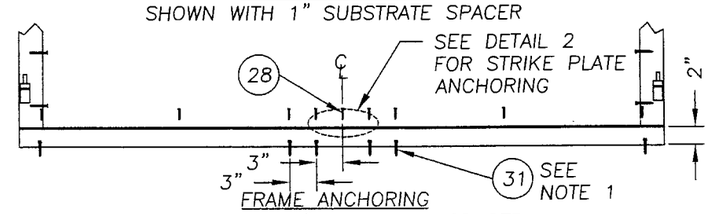

FRAME ANCHORING
SHOWN WITH 2" SUBSTRATE SPACER

Approved as complying with the Florida Building Code
Date MAY 25, 2006
NOA# 05-0715.02
Miami-Dade Product Control
Building
By

Documents Prepared By:
RW BUILDING CONSULTANTS, INC.
P.O. Box 230 Valrico FL. 33595
Phone No.: 813.659.9197
Florida Board of Professional Engineers
Certificate Of Authorization No. 9813
Lyndon, F. Schmidt, P.E. No. 43409

PRODUCT: HURRICANE FORCE "V" VINYL SWING DOOR SINGLE & FRENCH DOOR "IMPACT"

PART OR ASSEMBLY: DBL. DOOR FRAME ANCHORING USING FASTENER THROUGH FRAME

NO.	DATE	REVISIONS	BY
3	10/19/05	REVISED PER DADE LETTER	EW
2	09/29/05	ADDED SWING INDICATION	EW
1	7/25/05	PER DADE COMMENTS	EW

DATE: 05/24/05
SCALE: N.T.S.
DWG. BY: EW
CHK. BY: LFS
DRAWING NO.: S-2550
SHEET 7 OF 10

R:\PROJ 650 - 800\FF761\S-2550-REV-3\S-2550-7.DWG

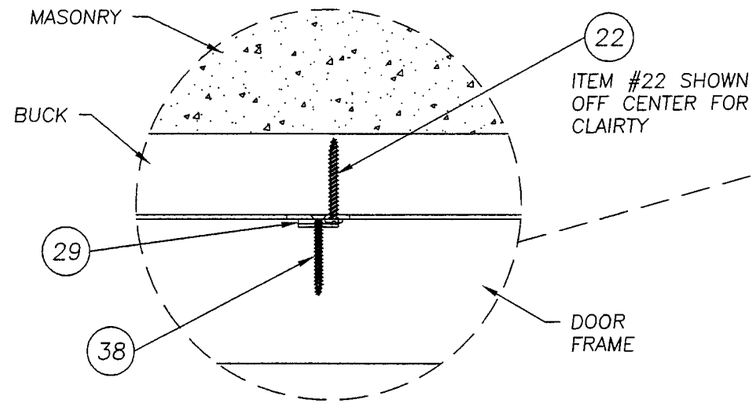

SEE ALTERNATE ANCHOR CLIP DETAIL SHEET 2

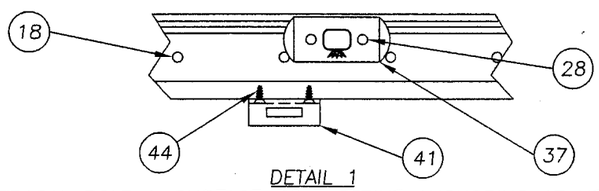

DETAIL 1
ASTRAGAL BOLT & SURFACE BOLT STRIKE ANCHORING AT HEADER

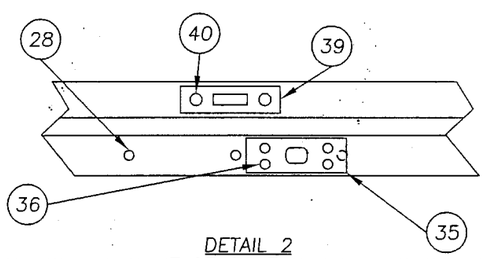

DETAIL 2
ASTRAGAL BOLT & SURFACE BOLT STRIKE ANCHORING AT SILL
SEE SECTION (1/5) WITH 1"x4" OR 2"x4" ALUM. SUBSTRATE SPACER

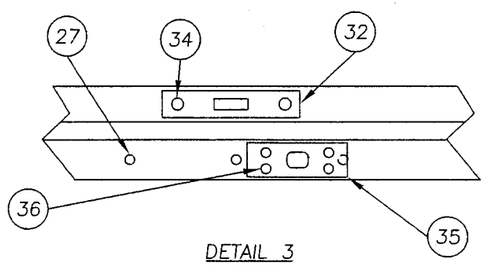

DETAIL 3
ASTRAGAL BOLT & SURFACE BOLT STRIKE ANCHORING AT SILL
SEE SECTION (1/5) W/O SUBSTRATE SPACE

NOTES:

1. 1/4" TAPCONS REQUIRE A MINIMUM 2.5" CLEARANCE TO MASONRY EDGES AND A MINIMUM 3" CLEARANCE TO ADJACENT TAPCONS.

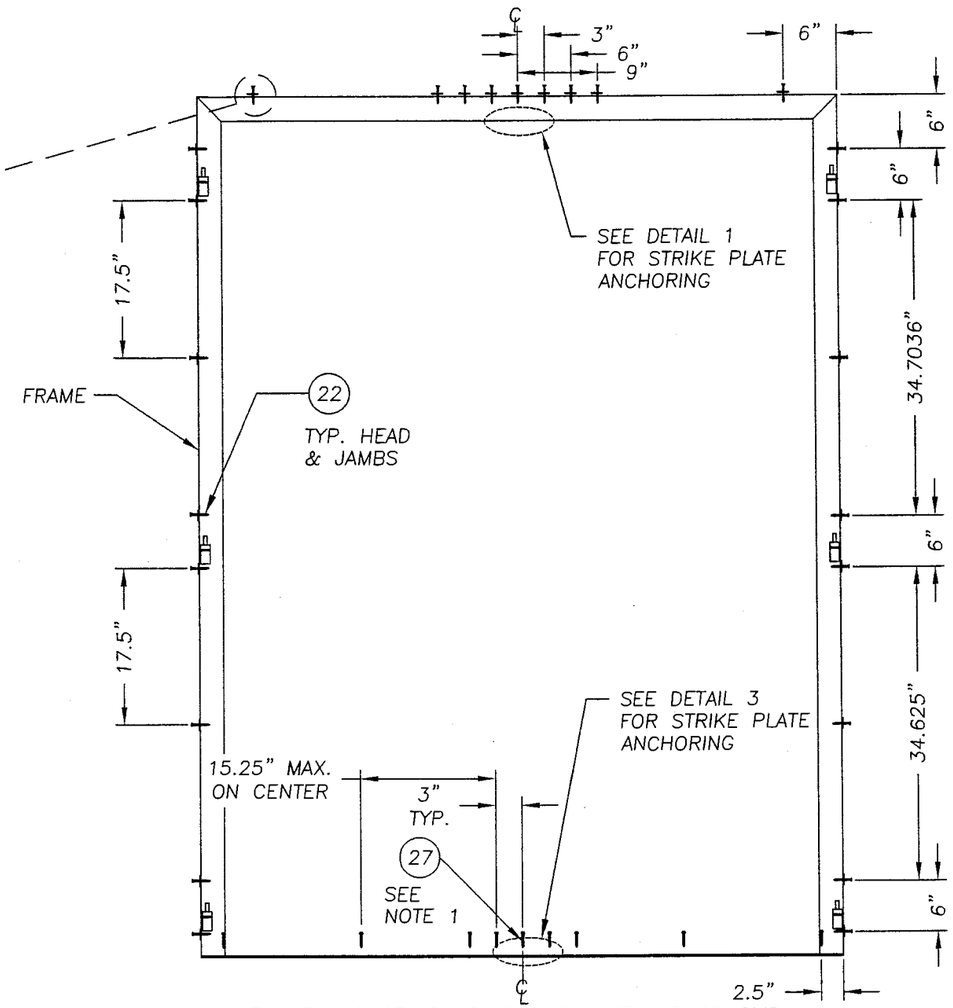

FRAME ANCHORING USING ALTERNATE ANCHOR CLIP
(DOOR PANELS REMOVED FOR CLARITY)

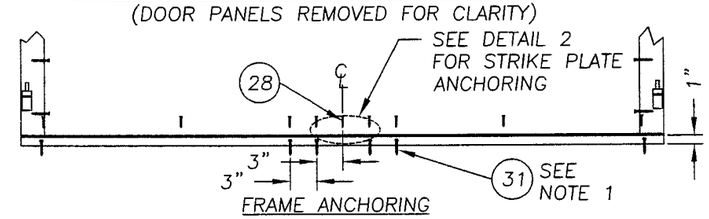

FRAME ANCHORING
SHOWN WITH 1" SUBSTRATE SPACER

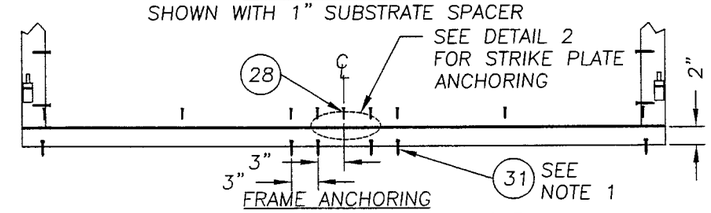

FRAME ANCHORING
SHOWN WITH 2" SUBSTRATE SPACER

Approved as complying with the Florida Building Code
Date MAY 25 2006
NOA# 05-0715.02
Miami-Dade Product Control
By

Documents Prepared By:
BUILDING CONSULTANTS, INC.
P.O. Box 230 Valrico FL. 33595
Phone No.: 813.659.9197
Florida Board of Professional Engineers
Certificate Of Authorization No. 9813
Lyndon, F. Schmidt, P.E. No. 43409

PRODUCT: HURRICANE FORCE "V" VINYL SWING DOOR "SINGLE & FRENCH DOOR "IMPACT"
PART OR ASSEMBLY: DBL. DOOR FRAME ANCHORING USING ALTERNATE ANCHOR CLIP

NO.	DATE	REVISIONS	BY
3	10/19/05	REVISED PER DADE LETTER	EW
2	09/29/05	ADDED SWING INDICATION	EW
1	7/25/05	PER DADE COMMENTS	EW

DATE: 05/24/05
SCALE: N.T.S.
DWG. BY: EW
CHK. BY: LFS
DRAWING NO.: S-2550
SHEET 8 OF 10

R:\PROJ 650 - 800\PF761\S-2550-REV-3\S-2550-8.DWG

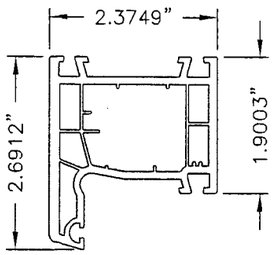

1 MAIN FRAME
EXTRUDED VINYL

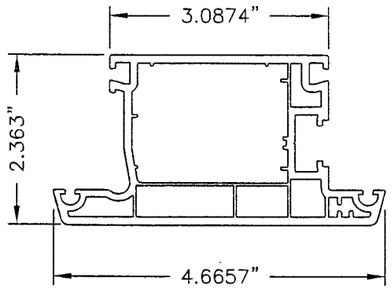

3 DOOR STILES & RAILS
EXTRUDED VINYL

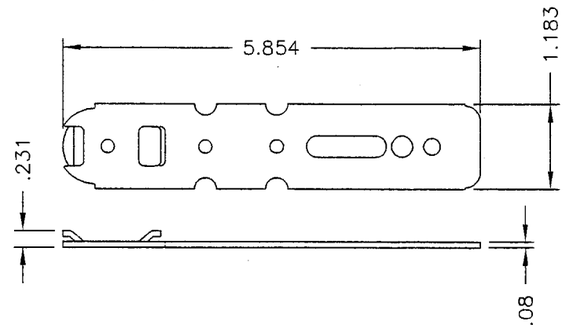

29 ANCHOR CLIP
MAT'L: 0.080" THK., DIN 10142,
Fe P02 G Z275 NA-C

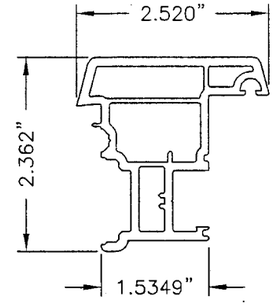

2 ASTRAGAL
EXTRUDED VINYL

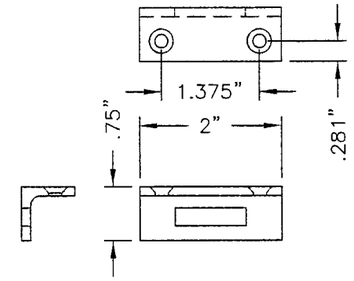

41 SURFACE BOLT
STRIKE PLATE-HEAD
(.125" THK. STL.)

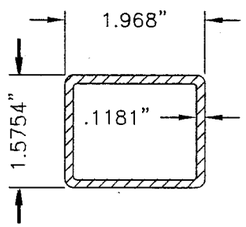

5 SASH FRAME REINF.

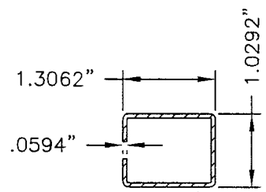

4 MAIN FRAME REINF.

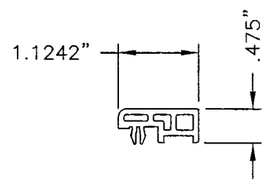

6 THRESHOLD COVER
EXTRUDED VINYL

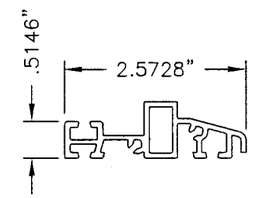

9 THRESHOLD
EXTRUDED VINYL

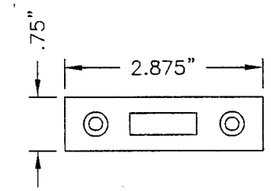

39 SURFACE BOLT
STRIKE PLATE-SILL
(.125" THK. STL.)

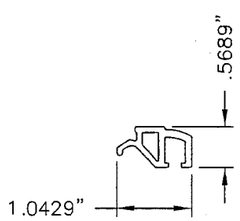

8 GLAZING BEAD
EXTRUDED VINYL

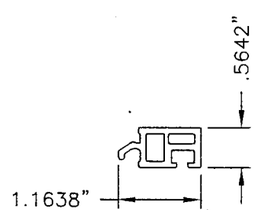

33 GLAZING BEAD
EXTRUDED VINYL

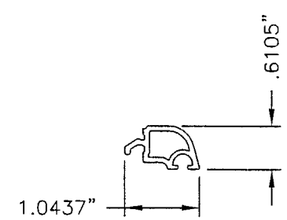

7 GLAZING BEAD
EXTRUDED VINYL

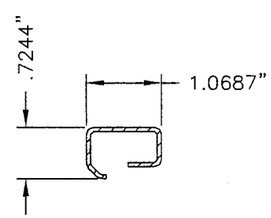

17 ASTRAGAL
EXTRUDED VINYL

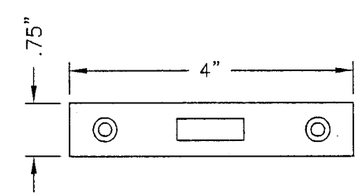

32 SURFACE BOLT
STRIKE PLATE-SILL
(.125" THK. STL.)

13 OUTER SEAL

10 INNER GLAZING BEAD SEAL

12 INNER SEAL

Approved as complying with the Florida Building Code
Date MAY 25, 2006
NOA# 05-0715.02
Miami Dade Product Control Division
By Manuel Perez

Documents Prepared By:
RW BUILDING CONSULTANTS, INC.
P.O. Box 230 Valrico FL. 33595
Phone No.: 813.659.9197
Florida Board of Professional Engineers
Certificate Of Authorization No. 9813
Lyndon, F. Schmidt, P.E. No. 43409
11.3.05

PRODUCT:
HURRICANE FORCE "V"
VINYL SWING DOOR SINGLE &
FRENCH DOOR "IMPACT"

PART OR ASSEMBLY:
COMPONENTS

REVISIONS

NO.	DATE		BY
3	10/19/05	REVISED PER DADE LETTER	EW
2	09/29/05	ADDED SWING INDICATION	EW
1	7/25/05	PER DADE COMMENTS	EW

DATE: 05/24/05
SCALE: N.T.S.
DWG. BY: EW
CHK. BY: LFS
DRAWING NO.: S-2550
SHEET 9 OF 10

R:\PROJ 650 - 800\PF761\S-2550-REV-3\S-2550-9.DWG

ITEM	DESCRIPTION	MATERIAL
1	MAIN FRAME P/N 8601 *	VINYL
2	ASTRAGAL P/N 8131 *	VINYL
3	DOOR STILE & RAIL FRAME P/N 8348 *	VINYL
4	MAIN FRAME REINFORCEMENT P/N 202446 (0.059" THK.)	STEEL
5	DOOR STILE & RAIL REINFORCEMENT P/N 202784	STEEL
6	THRESHOLD COVER (0.118" THK.) *	VINYL
7	GLAZING BEAD P/N R5056 *	VINYL
8	GLAZING BEAD P/N 8365 *	VINYL
9	THRESHOLD P/N 244165	ALUM.
10	INNER GLAZING BEAD SEAL	EPDM
11	GLAZING COMPOUND (GE SILGLAZE II)	SILICONE
12	INNER WEATHER SEAL	EPDM
13	OUTER WEATHER SEAL	EPDM
14	TYPE I – 1" INSULATED GLASS (INTER-LAYER BY SOLUTIA) 3/16" TEMPERED – AIR SPACE – 3/16" ANN./ .30" PVB – .015" PET.– .30" PVB./ 3/16" ANN.	GLASS
14A	TYPE II – 1" INSULATED GLASS (INTER-LAYER BY SOLUTIA) 3/16" TEMPERED – AIR SPACE – 3/16" ANN./ .90" PVB. / 3/16" ANN.	GLASS
15	DOOR HINGE	STEEL
16	161 TYPE LATCH BOLT	STEEL
17	ASTRAGAL REINF. P/N 202472	STEEL
18	#10 X 3" PPH SHEET METAL SCREW	STEEL
19	2X BUCK	WOOD
20	THERMOPLASTIC GLAZING SPACER	TPS
21	1/4" MAX. SHIM	WOOD
22	#10 X 1-3/4" PPH SHEET METAL SCREW	STEEL
23	DOOR HANDLE ASSEMBLY	STEEL
24	DOOR LOCK ASSEMBLY MULTIPOINT LOCK	STEEL
25	2 X 4 ALUMINUM RECTANGULAR TUBING	ALUM.
26	1 X 4 ALUMINUM RECTANGULAR TUBING	ALUM.
27	1/4" x 1-3/4" PFH TAPCON	STEEL
28	#8 X 1-1/4" PFH SELF TAPPING SCREW	STEEL
29	ANCHOR CLIP (0.080" THK., DIN 10142, Fe P02 G Z275 NA-C)	STEEL
30	MASONRY	CONCRETE
31	1/4" X 1-3/4" H.H. TAPCON	STEEL
32	SURFACE BOLT STRIKE PLATE (SILL TO MASONRY)	STEEL
33	GLAZING BEAD P/N R5063 *	VINYL
34	1/4" X 2-1/4" PFH TAPCON	STEEL
35	ASTRAGAL STRIKE PLATE SILL	STEEL
36	#8 X 3/4" PFH SELF DRILLING	STEEL
37	ASTRAGAL STRIKE PLATE HEAD	STEEL
38	#8 X 1-1/2" PFH SELF DRILLING	STEEL
39	SURFACE BOLT STRIKE PLATE MORTISE (SILL)	STEEL
40	#10 X 1" PFH SELF DRILLING	STEEL
41	SURFACE BOLT STRIKE PLATE UNIVERSAL (HEAD)	STEEL
42	SURFACE BOLT (IVES 454 8" LONG)	STEEL
43	#10-24 MACH. SCREW (SEX BOLT) W 3/4" MIN. ENGAGEMENT	STEEL
44	#10 X 1/2" PFH SELF DRILLING SCREW	STEEL
45	PLASTIC SPACER	PLASTIC

* THE APPROVED WHITE RIGID PVC EXTERIOR EXTRUSIONS FOR WINDOWS ARE TO BE PRODUCED BY EXTRUDER LICENSED IN AAMA CERTIFICATION PROGRAM FOR RIGID PVC EXTRUSIONS WITH MIAMI DADE COUNTY. EXTRUSION TO BE LABELED WITH AAMA'S PVC EXTRUSION CERTIFICATE LABEL, EXTRUSION CODE & "MDCA". ABOVE LISTED PVC EXTRUSIONS PRODUCED BY REGAL PLASTICS. LTD. (RGL-1).

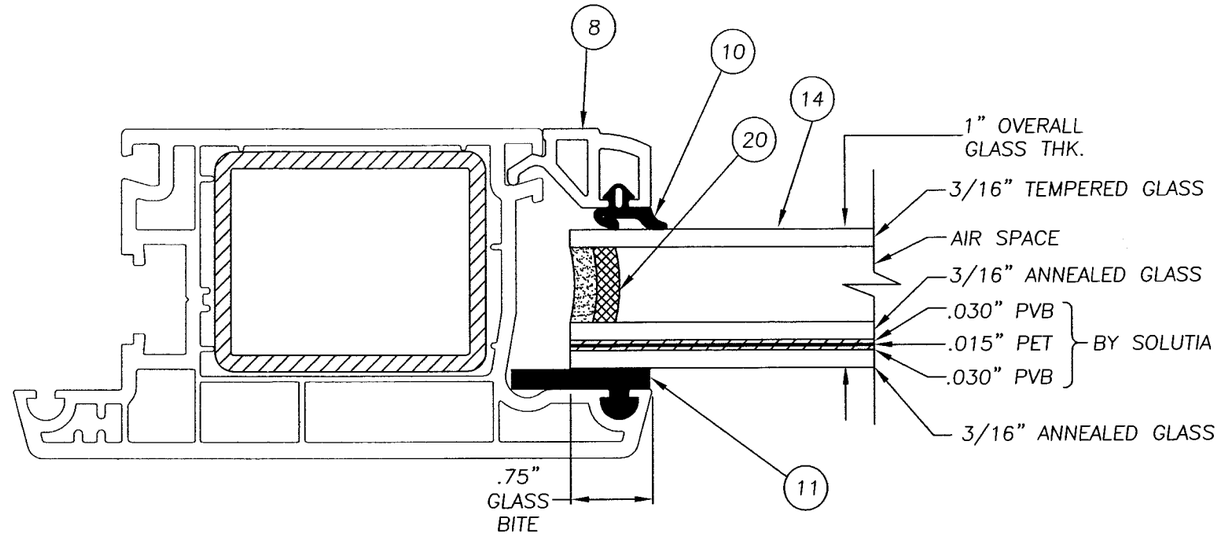

1" THICK GLASS TYPE I GLAZING DETAIL

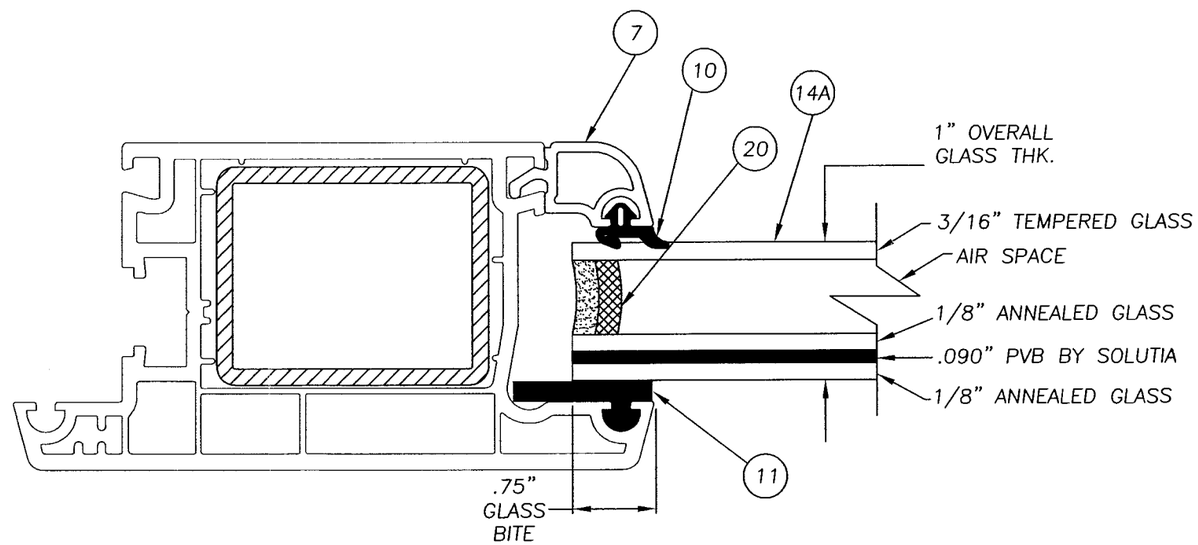

1" THICK GLASS TYPE II GLAZING DETAIL

Approved as complying with the Florida Building Code
Date MAY 25, 2006
NOA# 05-0715.02
Miami Dade Product Control
Design
By

Documents Prepared By:
RW BUILDING CONSULTANTS, INC.
P.O. Box 230 Valrico FL. 33595
Phone No.: 813.659.9197
Florida Board of Professional Engineers
Certificate Of Authorization No. 9813
Lyndon, F. Schmidt, P.E. No. 43409

PRODUCT: HURRICANE FORCE "V" VINYL SWING DOOR SINGLE & FRENCH DOOR "IMPACT"

PART OR ASSEMBLY: BILL OF MATERIALS & GLAZING DETAILS

NO.	DATE	BY
3	10/19/05 REVISED PER DADE LETTER	EW
2	09/29/05 ADDED SWING INDICATION	EW
1	7/25/05 PER DADE COMMENTS	EW

REVISIONS

DATE: 05/24/05
SCALE: N.T.S.
DWG. BY: EW
CHK. BY: LFS
DRAWING NO.: S-2550
SHEET 10 OF 10

\\Rwbcsrv\rwbc\proj 650 - 800\pf761\S-2550-REV-3\S-2550-10.dwg