MIAMI-DADE COUNTY

BUILDING CODE COMPLIANCE OFFICE (BCCO)
PRODUCT CONTROL DIVISION

MIAMI-DADE COUNTY, FLORIDA
METRO-DADE FLAGLER BUILDING
140 WEST FLAGLER STREET, SUITE 1603
MIAMI, FLORIDA 33130-1563
(305) 375-2901 FAX (305) 375-2908
www.buildingcodeonline.com

NOTICE OF ACCEPTANCE (NOA)

Hurst Awning Company, Inc.
6865 NW 36th Ave.
Miami, FL 33147

SCOPE:

This NOA is being issued under the applicable rules and regulations governing the use of construction materials. The documentation submitted has been reviewed by Miami-Dade County Product Control Division and accepted by the Board of Rules and Appeals (BORA) to be used in Miami Dade County and other areas where allowed by the Authority Having Jurisdiction (AHJ).

This NOA shall not be valid after the expiration date stated below. The Miami-Dade County Product Control Division (In Miami Dade County) and/or the AHJ (in areas other than Miami Dade County) reserve the right to have this product or material tested for quality assurance purposes. If this product or material fails to perform in the accepted manner, the manufacturer will incur the expense of such testing and the AHJ may immediately revoke, modify, or suspend the use of such product or material within their jurisdiction. BORA reserves the right to revoke this acceptance, if it is determined by Miami-Dade County Product Control Division that this product or material fails to meet the requirements of the applicable building code.

This product is approved as described herein, and has been designed to comply with the Florida Building Code, including the High Velocity Hurricane Zone.

DESCRIPTION: Extruded Aluminum Roll Up Shutter

APPROVAL DOCUMENT: Drawing No. **05-349**, titled "Roll-Up Shutter", sheets 1 through 12, prepared by Thornton-Tomasetti Group, dated 06/30/05, with revision date on 05/10/06, signed and sealed by V.J. Knezevich, P.E., bearing the Miami-Dade County Product Control Revision stamp with the Notice of Acceptance number and expiration date by the Miami-Dade County Product Control Division.

MISSILE IMPACT RATING: Large and Small Missile Impact

LABELING: Each unit shall bear a permanent label with the manufacturer's name or logo, city, state and following statement: "Miami-Dade County Product Control Approved", unless otherwise noted herein.

RENEWAL of this NOA shall be considered after a renewal application has been filed and there has been no change in the applicable building code negatively affecting the performance of this product.

TERMINATION of this NOA will occur after the expiration date or if there has been a revision or change in the materials, use, and/or manufacture of the product or process. Misuse of this NOA as an endorsement of any product, for sales, advertising or any other purposes shall automatically terminate this NOA. Failure to comply with any section of this NOA shall be cause for termination and removal of NOA.

ADVERTISEMENT: The NOA number preceded by the words Miami-Dade County, Florida, and followed by the expiration date may be displayed in advertising literature. If any portion of the NOA is displayed, then it shall be done in its entirety.

INSPECTION: A copy of this entire NOA shall be provided to the user by the manufacturer or its distributors and shall be available for inspection at the job site at the request of the Building Official.

This NOA **revises NOA # 02-0625.05** and consists of this page 1 and evidence page E-1 and E-2, as well as approval document mentioned above.

The submitted documentation was reviewed by **Jaime D. Gascon, P.E.**

PRODUCT CONTROL ACCEPTED

J. Gascon
5/26/06

NOA No 05-0718.02
Expiration Date: April 25, 2011
Approval Date: May 25, 2006

Hurst Awning Company, Inc.

NOTICE OF ACCEPTANCE: EVIDENCE SUBMITTED

A. DRAWINGS

1. Manufacturer's parts and sections drawings.
2. Drawing No **"05-349"**, titled "Roll-Up Shutter", sheets 1 through 12 of 12, prepared by Thornton-Tomasetti Group, dated 06/30/05, signed and sealed by V.J. Knezevich, P. E.

B. TESTS

1. Test report on Large Missile Impact Test and Cyclic Wind Pressure Test of extruded aluminum roll-up shutters 48" and 62" shutter width (42" and 56" span) and storm bars, prepared by Hurricane Engineering & Testing Inc., Report No.**HETI-94-392a**, dated Dec. 12, 1994, signed and sealed by Hector M. Medina, P.E.
   "Submitted under NOA# 02-0625.05"
2. Test report on Uniform Static Air Pressure Test of extruded aluminum roll-up shutters 48", 62" and 34" shutter width (42" 56" and 28" span), prepared by Hurricane Engineering & Testing Inc., Report No.**HETI-94-389a**, dated Dec. 07, 1994, signed and sealed by Hector M. Medina, P.E.
   "Submitted under NOA# 02-0625.05"
3. Test report on Large Missile Impact Test of 2" x 9" x 240" storm bar, prepared by Hurricane Engineering & Testing Inc., Report No.**HETI-95-452a**, dated May 22, 1995, signed and sealed by Hector M. Medina, P.E.
   "Submitted under NOA# 02-0625.05"
4. Test report on Large Missile Impact Test and Cyclic Wind Pressure Test of extruded aluminum roll-up shutters 63.88" shutter width (63.88" span), prepared by Construction Testing Corp., Report No.**CTC-95-024**, dated June 21, 1995, signed and sealed by Christopher G Tyson, P.E.
   "Submitted under NOA# 02-0625.05"
5. Test report on Uniform Static Air Pressure Test of extruded aluminum roll-up shutters 63.88" shutter width (63.88" span), prepared by Construction Testing Corp., Report No.**CTC-95-024**, dated June 21, 1995, signed and sealed by Christopher G Tyson, P.E.
   "Submitted under NOA# 02-0625.05"

C. CALCULATIONS

1. Revised Anchor Calculations and structural; analysis, prepared by Thornton-Tomasetti Group, dated 06/24/05, singed and sealed V.J. Knezevich , P. E.
   With No 4/3 Stress Increase

D. QUALITY ASSURANCE

1. Miami Dade Building Code Compliance Office (BCCO).

Jaime D. Gascon, P.E.
Chief, Product Control Division
NOA No. 05-0718.02
Expiration Date: April 25, 2011
Approval Date: May 25, 2006

NOTICE OF ACCEPTANCE: EVIDENCE SUBMITTED

E. MATERIAL CERTIFICATIONS

1. Mill Certification of Aluminum Alloy 6063-T6, prepared by INDALEX, Inc., per Die Dwg. No. GAH 42857, dated December 13, 1994.
   "Submitted under NOA# 02-0625.05"
2. Certified Tensile Test Report No.HETI-94-T56a, of an Aluminum Roll-Shutter, tested per ASTM E8-93 and prepared by Hurricane Engineering & Testing Inc., dated Jan. 11, 1995, signed and sealed by Hector M. Medina, P.E.
   "Submitted under NOA# 02-0625.05"

F. STATEMENTS

1. None

G. OTHER

1. Notice of Acceptance No. **02-0625.05,** Hurst Awning Company, Inc., "Roll-Up Shutter", approved on 07/17/02 and expiring on 04/25/06.

Jaime D. Gascon, P.E.
Chief, Product Control Division
NOA No. 05-0718.02
Expiration Date: April 25, 2011
Approval Date: May 25, 2006

Print Information: P:\FL1\Projects\KK5349.00\Drawings\R1-prg\05-349-01.dwg MCantu 05/10/2006 05:43:09pm 05/10/06 17:43

GENERAL NOTES:

1. THESE APPROVAL DOCUMENTS REPRESENT A SHUTTER SYSTEM ANALYZED WITH THE PROVISION SET FOR THE ISSUANCE OF A NOTICE OF ACCEPTANCE (NOA) BY MIAMI-DADE COUNTY PRODUCT CONTROL DIVISION FOR THE HIGH VELOCITY HURRICANE ZONE (HVHZ) OF THE FLORIDA BUILDING CODE 2004 WITH 2005 SUPPLEMENTS.
2. NO INCREASE IN ALLOWABLE STRESS HAS BEEN USED IN THE DESIGN OF THIS PRODUCT. WIND LOAD DURATION FACTOR Cd = 1.6 WAS USED FOR WOOD LAG SCREW DESIGN.
3. DETERMINE THE POSITIVE AND NEGATIVE DESIGN LOADS TO USE WHEN REFERENCING THESE DOCUMENTS IN ACCORDANCE WITH THE GOVERNING CODE AND GOVERNING WIND VELOCITY. FOR WIND LOAD CALCULATIONS IN ACCORDANCE WITH ASCE 7-02, A DIRECTIONALITY FACTOR OF Kd =0.85 SHALL BE USED.
4. THESE APPROVAL DOCUMENTS ARE GENERIC AND DO NOT INCLUDE INFORMATION FOR SITE-SPECIFIC APPLICATION OF THIS SHUTTER SYSTEM.
5. USE OF THESE APPROVAL DOCUMENTS SHALL COMPLY WITH CHAPTER 61G15-23 OF THE FLORIDA ADMINISTRATIVE CODE.
6. THESE APPROVAL DOCUMENTS, ARE SUITABLE TO BE APPLIED BY THE CONTRACTOR PROVIDED THE CONTRACTOR DOES NOT DEVIATE FROM THE CONDITIONS DETAILED HEREIN AND THE CONTRACTOR VERIFIES THAT THE EXISTING STRUCTURE DOES NOT DEVIATE IN EITHER FORM OR MATERIAL FROM THE STRUCTURAL SUBSTRATES DETAILED HEREIN.
7. ANY MODIFICATIONS OR ADDITIONS TO THESE APPROVAL DOCUMENTS WILL VOID THE APPROVAL DOCUMENTS.
8. WHEN THE SITE CONDITIONS DEVIATE FROM THESE APPROVAL DOCUMENTS, THE BUILDING OFFICIAL MAY ELECT ONE OF THE FOLLOWING OPTIONS:
   A) REQUIRE THAT SITE SPECIFIC DOCUMENTS BE PREPARED, SIGNED, DATED AND SEALED BY A LICENSED ENGINEER OR REGISTERED ARCHITECT, WHICH DETAIL AND JUSTIFY THE DEVIATION. SAID DOCUMENTS SHALL BE SUBMITTED TO THE PRODUCT ENGINEER FOR REVIEW AS A CONDITION TO THE BUILDING OFFICIAL GRANTING HIS/HER APPROVAL.
   B) REQUIRE THAT A ONE-TIME SITE SPECIFIC APPROVAL BE APPLIED FOR AND SECURED FROM THE MIAMI-DADE COUNTY PRODUCT CONTROL DIVISION

   WHEN THE SITE CONDITION DEVIATIONS OCCUR WITHIN THE HIGH VELOCITY HURRICANE ZONE AREAS ONLY OPTION "B" SHALL BE ACCEPTED BY THE BUILDING OFFICIAL.
9. ONCE ALL COMPONENTS HAVE BEEN CHOSEN, CHECK FOR COMPLIANCE WITH SECTION 1613.1(9) OF THE FLORIDA BUILDING CODE.
10. ALL EXTRUSIONS SHALL BE 6063-T6 ALUMINUM ALLOY, U.O.N.
11. EACH SHUTTER ASSEMBLY SHALL BE PERMANENTLY LABELED ON HOOD OR GUIDE RAIL AS FOLLOWS:
    HURST AWNING CO.
    MIAMI, FLORIDA
    MIAMI-DADE COUNTY PRODUCT APPROVED
12. ALL SCREWS, BOLTS AND WASHERS SHALL BE 2024-T6 ALUMINUM ALLOY, GALVANIZED OR STAINLESS STEEL WITH A MINIMUM Fy = 33 K.S.I. POP RIVETS SHALL BE 3/16"Ø 5052 ALUMINUM ALLOY.
13. MATERIAL SPECIFICATIONS NOTED HEREIN ARE IDENTICAL TO THE MATERIALS USED IN PRODUCT TESTING.
14. DESIGN CRITERIA FOR MULTIPLE SPANS:
    a. MAXIMUM DEFLECTION OF OUTSIDE HEADERS = L/30
    b. MAXIMUM DEFLECTION OF POSITIVE (INSIDE) STORM BARS = L/30 OR 2"
    c. MAXIMUM DEFLECTION OF NEGATIVE (OUTSIDE) STORM BARS = L/30
    d. MAXIMUM POSITIVE DEFLECTION OF SLATS = L/30 OR 2"; NEGATIVE DEFLECTION OF SLATS = L/30.

INDEX

SHEET No.	DESCRIPTION
1	GENERAL NOTES - COMPONENTS
2	SIDE RAIL CONNECTIONS & SECTIONS
3	TYPICAL ELEVATIONS & SECTIONS
4	SLAT SPAN SCHEDULE - HEADER - DRUM SUPPORT
5	ANCHOR SCHEDULE
6	NEGATIVE (EXTERIOR) STORM BAR SCHEDULE
6	POSITIVE (INTERIOR) STORM BAR SCHEDULE
7	PERMANENT MULLION SCHEDULE
8	HEADER SCHEDULE (40 P.S.F. TO 230 P.S.F. DESIGN LOADS)

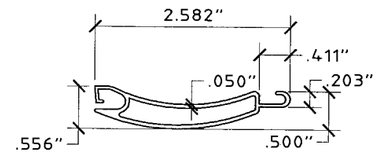

1 **ROLL-UP SLAT**
SCALE: HALF SIZE

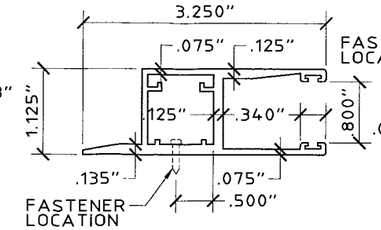

2a **ALT. SIDE RAIL**
SCALE: HALF SIZE

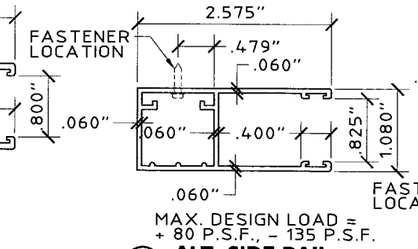

2b **ALT. SIDE RAIL**
SCALE: HALF SIZE

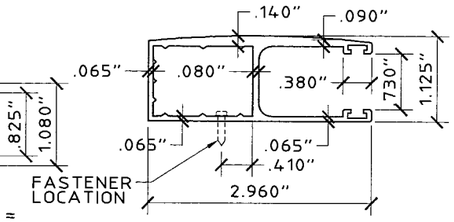

2c **ALT. SIDE RAIL**
SCALE: HALF SIZE

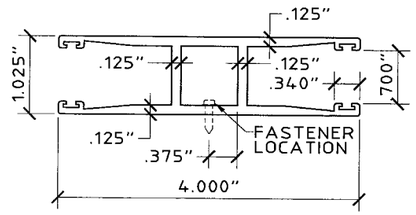

3 **SIDE RAIL**
SCALE: HALF SIZE

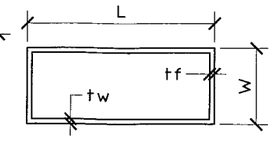

BOX BEAM (TYPE A)
4 5 7 10 12 14

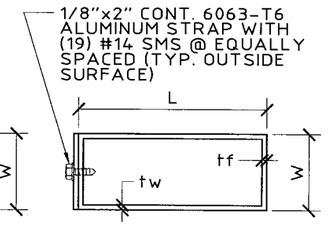

BOX BEAM W/ STRAP (TYPE B)
6 8 11 13 15

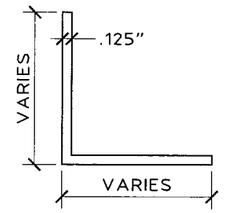

17 **ANGLE**
SCALE: HALF SIZE

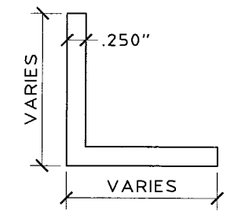

18 **ANGLE**
SCALE: HALF SIZE

INSTRUCTIONS:

1. DETERMINE ASCE 7-02 WIND LOAD ON OPENING TO BE COVERED WITH A ROLL UP SHUTTER.
2. DETERMINE THE SLAT SPAN THAT YOU WILL NEED TO COVER THE OPENING.
3. DETERMINE IF YOU WILL NEED A SINGLE SPAN, DOUBLE SPAN OR THREE OR MORE SPANS TO COVER THE OPENING.

SINGLE SLAT SPANS

1. FOR A SINGLE SPAN, SEE SCHEDULE "B", ALLOWABLE SLAT SPANS ON PAGE 4. LOCATE THE DESIGN WIND LOAD, AND THEN READ THE ALLOWABLE SLAT SPAN.

STORM BARS

1. FOR MULTIPLE SPANS, UTILIZING STORM BARS, SEE SCHEDULES F, G & H ON PAGE 6 FOR POSITIVE & NEGATIVE DESIGN WIND LOADS AND STORM BARS. THE LAST ROW OF EACH DESIGN LOAD INDICATES THE MAXIMUM ALLOWABLE SLAT SPAN. UTILIZING THAT OR A LESSER SLAT SPAN, READ SCHEDULE HORIZONTALLY FROM LEFT TO RIGHT, UNTIL YOU FIND A STORM BAR SIZE AND HEIGHT THAT FITS THE OPENING.

MULLIONS

1. FOR ALLOWABLE SLAT SPANS, UTILIZING A PERMANENT MULLION, SEE SCHEDULE "J" ON PAGES 9 & 10. SELECT YOUR DESIGN WIND LOAD. THE LAST ROW OF EACH DESIGN LOAD INDICATES THE MAX. ALLOWABLE SLAT SPAN. UTILIZING THAT OR A LESSER SPAN, READ FROM LEFT TO RIGHT AND SELECT THE PERMANENT MULLION THAT HAS SUFFICIENT HEIGHT FOR YOUR OPENING.

CONNECTIONS

1. FOR PROPER CONNECTIONS AT THE TOP AND BOTTOM OF STORM BARS AND MULLIONS, SEE SCHEDULE "C" OR "D", PAGE 5. EACH STORM BAR AND MULLION SCHEDULE HAS REACTION LOADS INDICATED ON THE SCHEDULE TO THE RIGHT OF THE ALLOWABLE SPAN. TAKE THAT NUMBER AND ENTER SCHEDULE "C" FOR A TENSION CONNECTION OR SCHEDULE "D" FOR A SHEAR CONNECTION TO DETERMINE THE TYPE AND SIZE OF ANCHOR AS WELL AS THE EMBEDMENT INTO CONCRETE, CONCRETE BLOCK OR WOOD. THIS SCHEDULE WILL ALSO GIVE YOU THE SIZE AND THICKNESS OF THE ALUMINUM ANGLES TO BE USED AS WELL AS THE TEK SCREW ATTACHMENT OF THE ANGLE TO THE STORM BAR.

HEADERS

1. HEADERS FOR STORM BARS CAN BE FOUND IN SCHEDULE "K" ON PAGE 8. SELECT THE DESIGN WIND LOAD AND ENTER SCHEDULE "K". NOTE THAT THE MAXIMUM ALLOWABLE OPENING HEIGHT IS SHOWN AT THE TOP OF THE SCHEDULE. READ ACROSS FROM LEFT TO RIGHT FROM YOUR DESIGN WIND LOAD UNTIL YOU INTERSECT THE COLUMN THAT SHOWS A HEIGHT EQUAL TO OR GREATER THAN YOUR SELECTED OPENING HEIGHT. SEVERAL HEADER SIZES ARE IN THE SCHED. YOU MAY CHOOSE FROM THE COLUMN THAT BEST MEETS YOUR REQUIREMENTS.
2. CONNECTIONS FOR HEADERS MAY ALSO BE FOUND IN SCHEDULES "C" AND "D" (SEE REACTIONS FOR HEADERS IN HEADER REACTION SCHED. E, PAGE 5.

DEFLECTION

1. TOTAL DEFLECTION OF THE SLAT WAS CALCULATED AND IT CANNOT EXCEED 2" & L/30 THE DEFLECTION OF EACH COMPONENT CONTRIBUTES TO THE DEFLECTION OF THE SLAT.

STORM BAR, HEADER, MULLION, BUILD-OUT AND ANGLE MEMBER - SCHEDULE A

MEMBER MARK	MEMBER TYPE	W (INCHES)	L (INCHES)	Tf (INCHES)	Tw (INCHES)	2" x 1/8" AL. STRAP REQUIRED
4	A	2	2	.125	.125	
5	A	2	3	.125	.125	
6	B	2	3	.125	.125	YES *
7	A	2	4	.125	.125	
8	B	2	4	.125	.125	YES *
10	A	2	5	.125	.125	
11	B	2	5	.125	.125	YES *
12	A	2	6	.125	.125	
13	B	2	6	.125	.125	YES *
14	A	2	8	.125	.125	
15	B	2	8	.125	.125	YES *
17	ANGLE	2 MIN.	2 MIN.	.125	.125	
18	ANGLE	2 MIN.	2 MIN.	.250	.250	

* ONE CONTINUOUS STRAP REQUIRED ON THE OUTSIDE SURFACE OF OUTSIDE STORM BAR ONLY.

PRODUCT REVISED
as complying with the Florida Building Code
Acceptance No. 05-0718.02
Expiration Date 04/25/11
By [signature]
Miami-Dade Product Control Division

Thornton-Tomasetti Group
330 N. Andrews Ave., Suite 450 • Ft. Lauderdale, FL 33301
Tel. (954) 522-3690 • Fax (954) 522-3691 • COA # 7519
Website: www.TheTTGroup.com

Copyright © 2005 Thornton-Tomasetti Group, Inc.

ROLL-UP SHUTTER

Manufacturers of Hurricane & Security Protection Products
HURST AWNING COMPANY, INC. "QUALITY SERVICE SINCE 1957"
6865 N.W. 36th Avenue
Miami, Florida 33147
Phone: (305) 635-0900
Toll Free: (800) 327-0905
Fax: (305) 634-9078

V.J. Knezevich
Professional Engineer
FL License No.: PE-0070983
MAY 08 2006

revisions

no	date	by	description
0	06/30/05	NW	PREVIOUSLY DRAWING NO. 96-380
0	05/10/06	NW	BCCO COMMENTS

date 06/30/2005
scale AS NOTED
drawn by MCR
design by VJK
checked by VJK
drawing no. 05-349
sheet 1 of 12

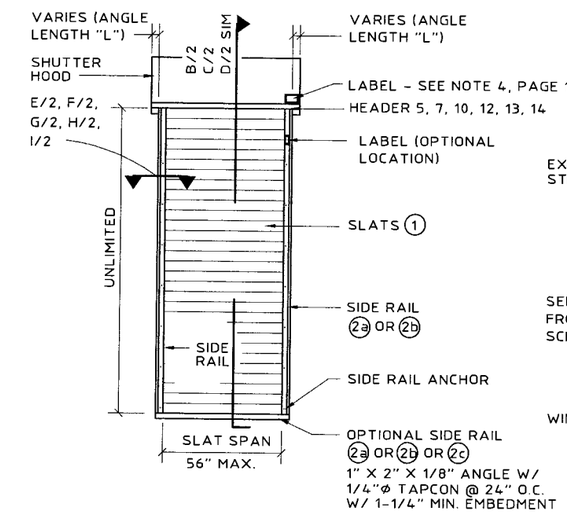

A ELEVATION OF SINGLE SPAN CONDITION
N.T.S.

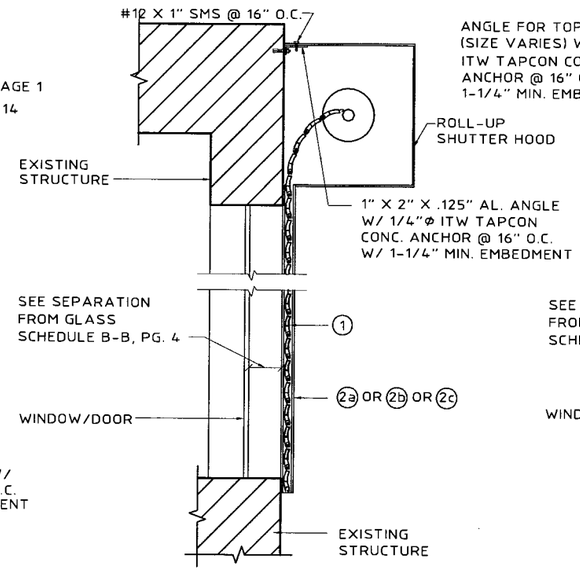

B WALL MOUNT SECTION
SCALE : 3/4" = 1'-0"

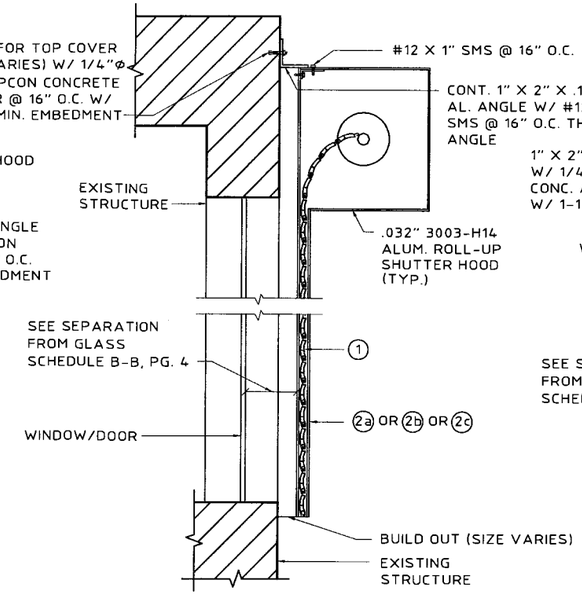

C BUILD OUT SECTION
SCALE : 3/4" = 1'-0"

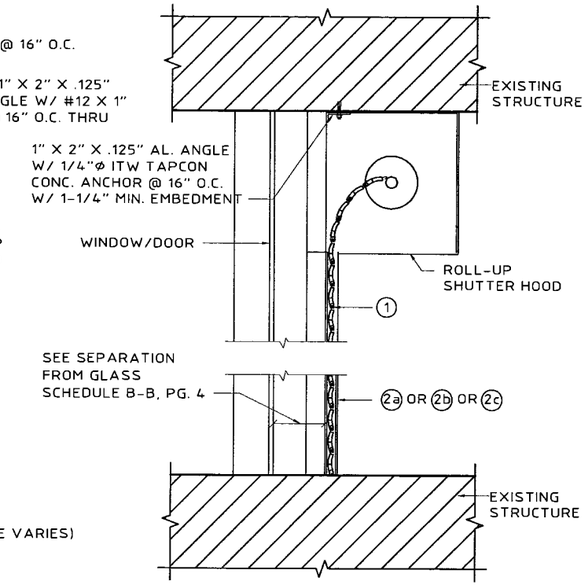

D INSIDE MOUNT SECTION
SCALE : 3/4" = 1'-0"

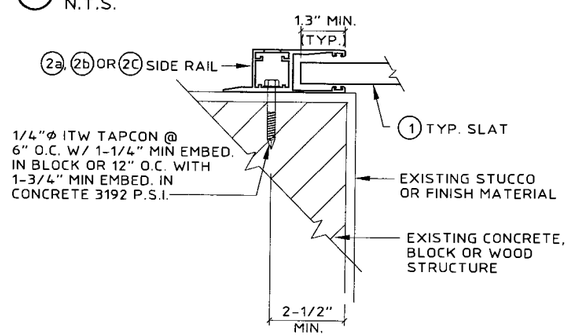

E WALL MOUNT (PLAN)
SCALE : 3" = 1'-0"

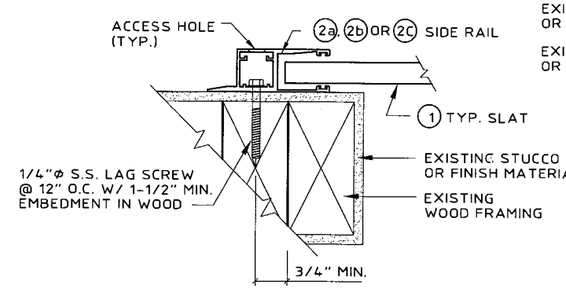

F WOOD FRAME WALL MOUNT (PLAN)
SCALE : 3" = 1'-0"

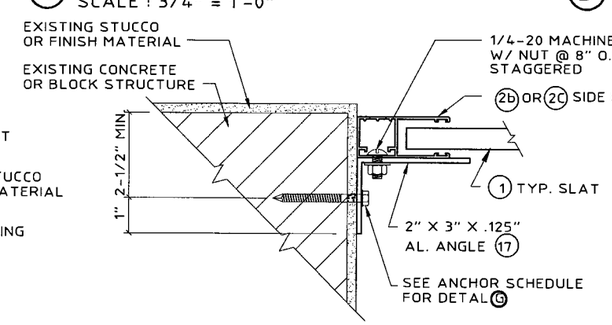

G INSIDE MOUNT (PLAN)
SCALE : 3" = 1'-0"

ANCHOR SCHEDULE FOR DETAIL G		
1/4"Φ ITW TAPCON W/ 1-3/4" EMBED IN 3192 P.S.I. CONCRETE	1/4"Φ ELCO TAPCON W/ 1-3/4" EMBED IN 3320 P.S.I. CONCRETE AND 1-1/4" EMBED IN HOLLOW CMU BLOCK	
	CONCRETE	BLOCK
6"	6"	3"

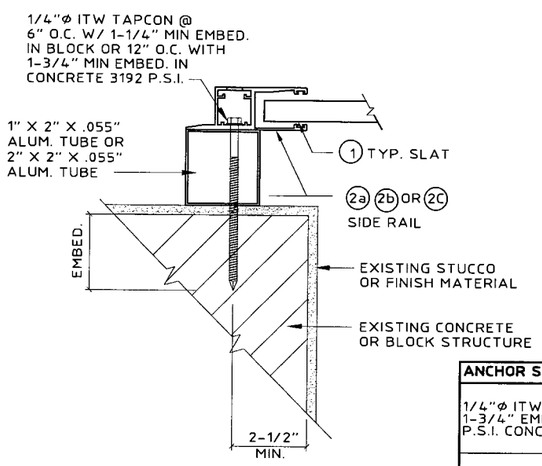

H BUILD-OUT MOUNT (PLAN)
SCALE : 3" = 1'-0"

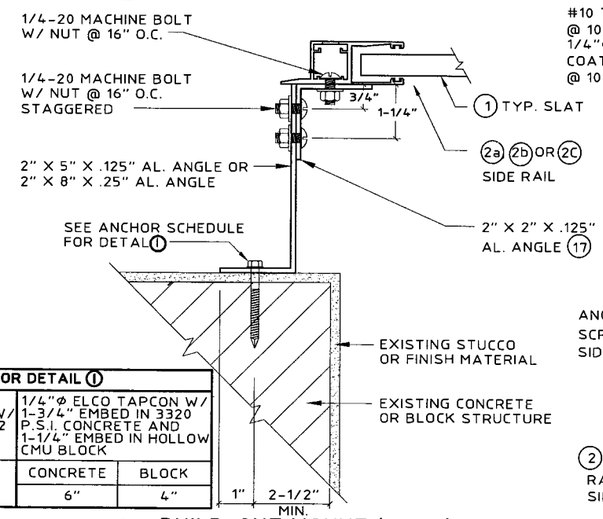

ANCHOR SCHEDULE FOR DETAIL I		
1/4"Φ ITW TAPCON W/ 1-3/4" EMBED IN 3192 P.S.I. CONCRETE	1/4"Φ ELCO TAPCON W/ 1-3/4" EMBED IN 3320 P.S.I. CONCRETE AND 1-1/4" EMBED IN HOLLOW CMU BLOCK	
	CONCRETE	BLOCK
7"	6"	4"

I BUILD-OUT MOUNT (PLAN)
SCALE : 3" = 1'-0"

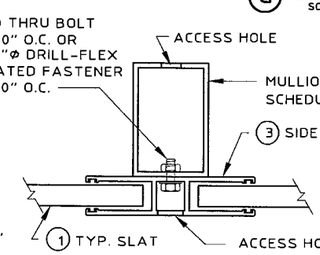

J

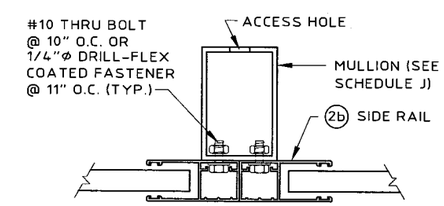

K

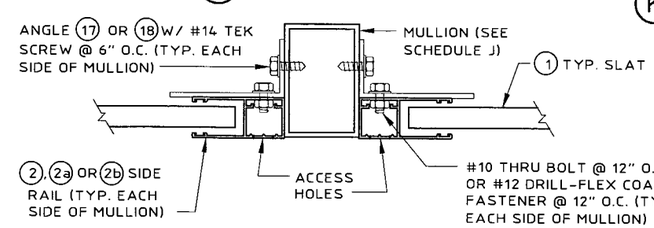

L SIDE RAIL TO MULLION DETAILS
SCALE : 3" = 1'-0"

PRODUCT REVISED
as complying with the Florida Building Code
Acceptance No. 05-0718.02
Expiration Date 04/25/11
By _____
Miami-Dade Product Control Division

Thornton-Tomasetti Group
330 N. Andrews Ave., Suite 450 • Ft. Lauderdale, FL 33301
Tel. (954) 522-3690 • Fax (954) 522-3691 • COA # 7319
Website: www.TheTTGroup.com

Copyright © 2005 Thornton-Tomasetti Group, Inc.

ROLL-UP SHUTTER

Manufacturers of Hurricane & Security Protection Products
HURST AWNING COMPANY, INC.
QUALITY SERVICE SINCE 1937
6865 N.W. 36th Avenue
Miami, Florida 33147
Phone: (305) 635-0900
Toll Free: (800) 327-0905
Fax: (305) 634-9078

V.J. Knezevich
Professional Engineer
FL License No. PE 0010983
MAY 08 2006

revisions			
no	date	by	description
0	06/30/05	NW	PREVIOUSLY DRAWING NO. 9b-380
0	05/10/06	NW	BCCO COMMENTS

date 06/30/2005	
scale AS NOTED	drawn by MCR
design by VJK	checked by VJK
drawing no. 05-349	
sheet 2 of 12	

Print Information: P:\FL1\Projects\KK5349.00\Drawings\R1-prg\05-349-02.dwg MCantu 05/10/2006 05:40:30pm 05/10/06 17:40

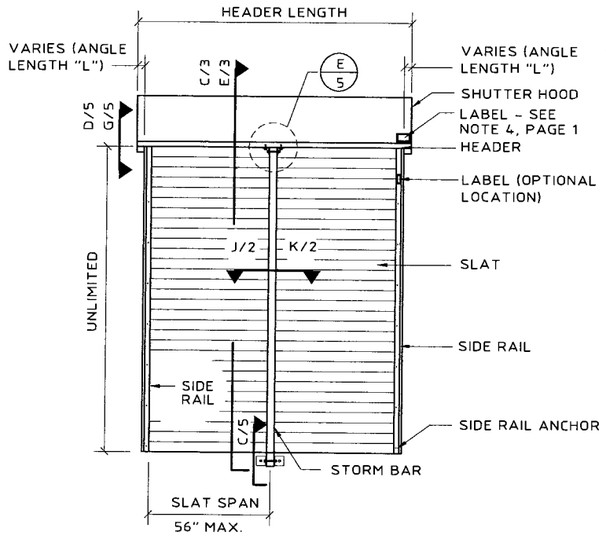

Ⓐ WALL MOUNT & BUILD OUT ELEVATION

N.T.S.

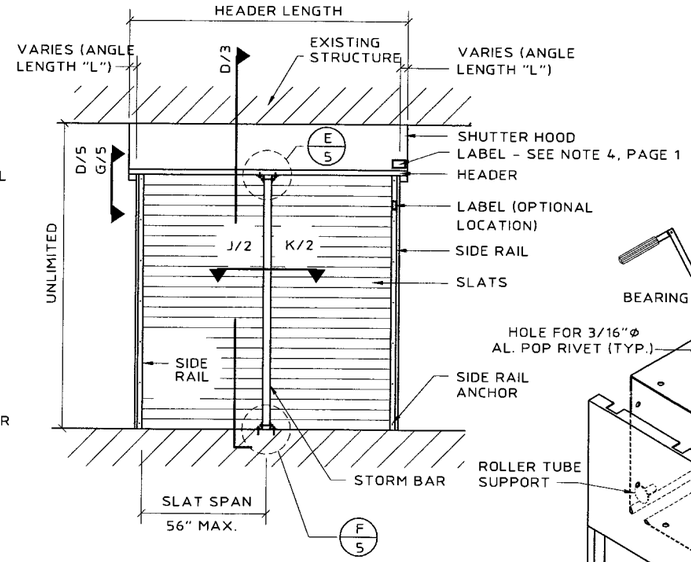

Ⓑ INSIDE MOUNT ELEVATION

N.T.S.

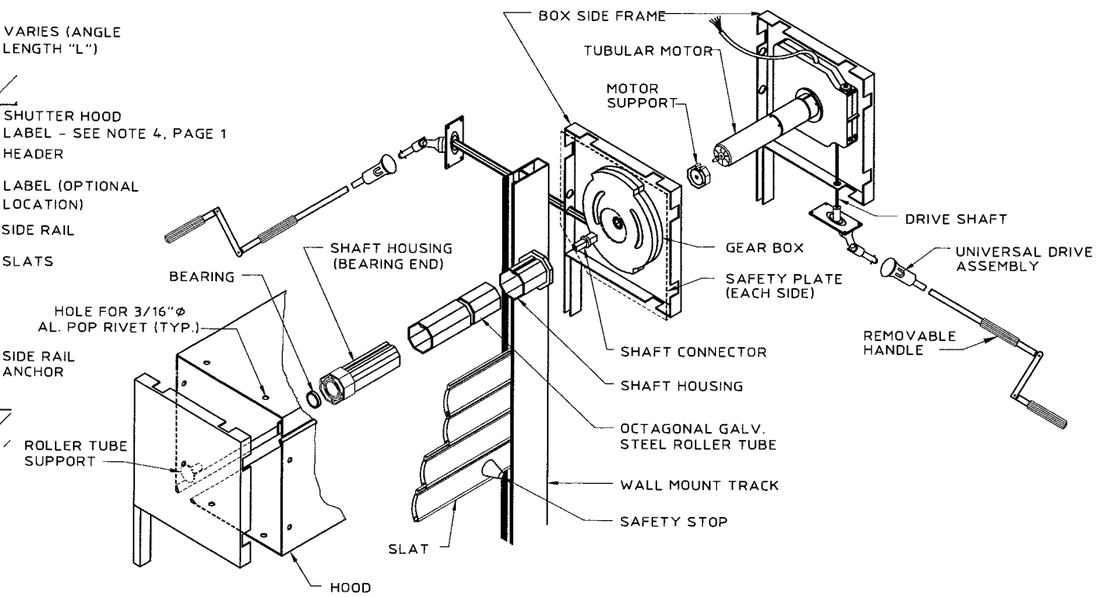

ISOMETRIC OF CAST HEADER ASSEMBLY

N.T.S.

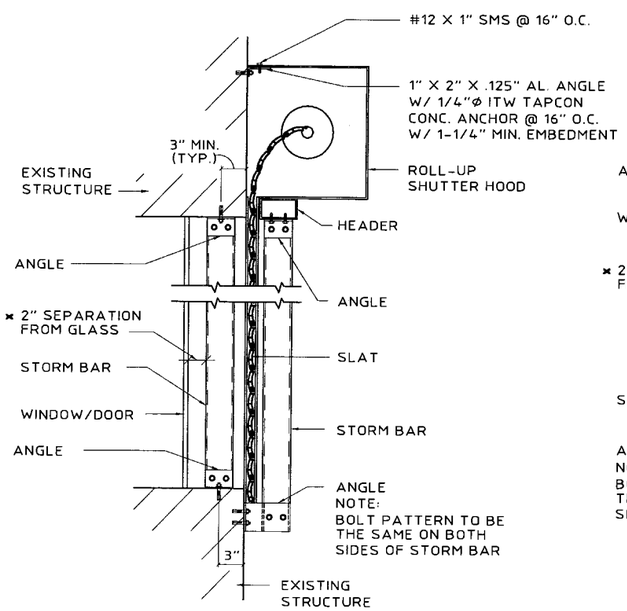

Ⓒ WALL MOUNT SECTION W/ STORM BAR

SCALE : 3/4" = 1'-0"

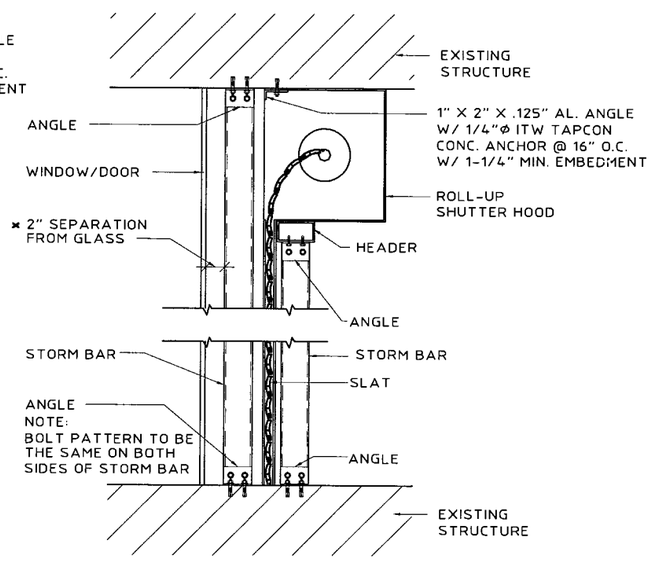

Ⓓ INSIDE MOUNT SECTION W/ STORM BAR

SCALE : 3/4" = 1'-0"

× 1-1/2" SEPARATION MAY BE USED WHEN POSITIVE LOADED STORM BARS FROM SCHEDULE G ARE USED

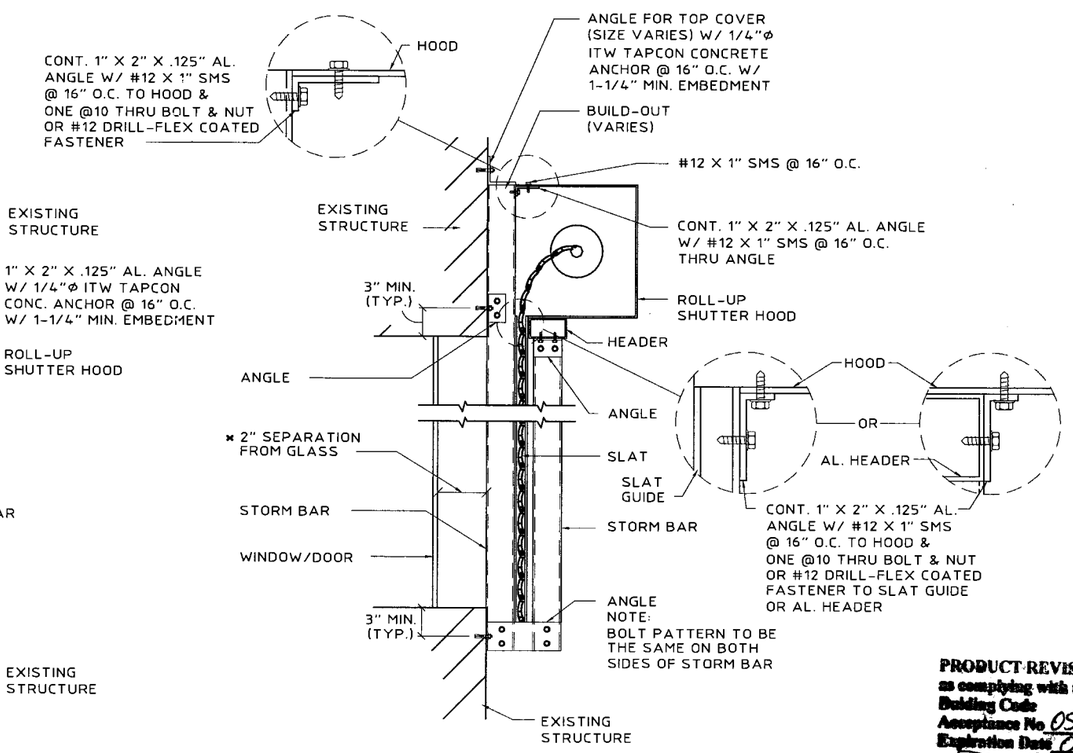

Ⓔ BUILD-OUT SECTION W/ STORM BAR

SCALE : 3/4" = 1'-0"

PRODUCT REVISED
as complying with the Florida Building Code
Acceptance No. 05-0718.02
Expiration Date 04/25/07
By
Miami Dade Product Control Division

Thornton-Tomasetti Group
330 N. Andrews Ave., Suite 450 • Ft. Lauderdale, FL 33301
Tel. (954) 522-3690 • Fax (954) 522-3691 • COA # 7519
Website: www.TheTTGroup.com

Copyright © 2005 Thornton-Tomasetti Group, Inc.

ROLL-UP SHUTTER

Manufacturers of Hurricane & Security Protection Products
HURST AWNING COMPANY, INC. QUALITY SERVICE SINCE 1957
6865 N.W. 36th Avenue
Miami, Florida 33147
Phone: (305) 635-0900
Toll Free: (800) 327-0905
Fax: (305) 634-9078

V.J. Knezevich
Professional Engineer
FL License No.: PE 0010983

MAY 08 2006

revisions

no	date	by	description
0	06/30/05	NW	PREVIOUSLY DRAWING NO. 96-380
0	05/10/06	NW	BECO COMMENTS

date	06/30/2005
scale	AS NOTED
drawn by	MCR
design by	VJK
checked by	VJK
drawing no.	05-349

sheet 3 of 12

Print Information: P:\FL1\Projects\KK5349.00\Drawings\R1-prg\05-349-03.dwg MCantu 05/10/2006 05:40:17pm 05/10/06 17:40

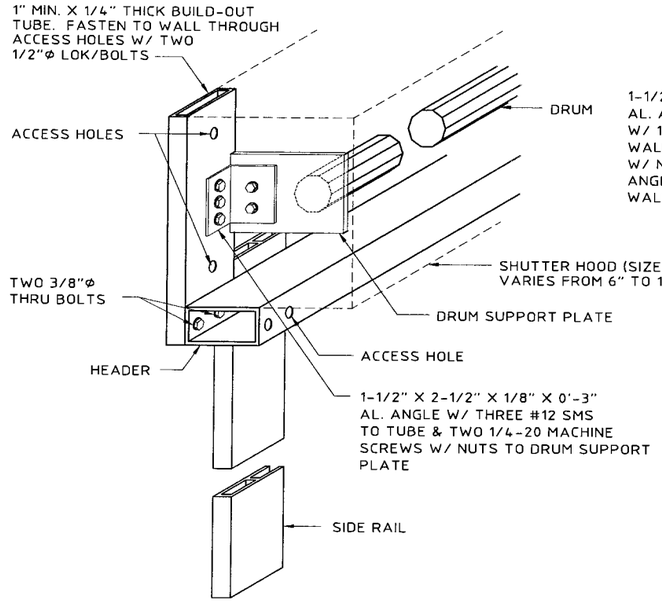

Ⓐ DRUM SUPPORT & HEADER TO BUILD-OUT DETAIL

SCALE : 1-1/2" = 1'-0"

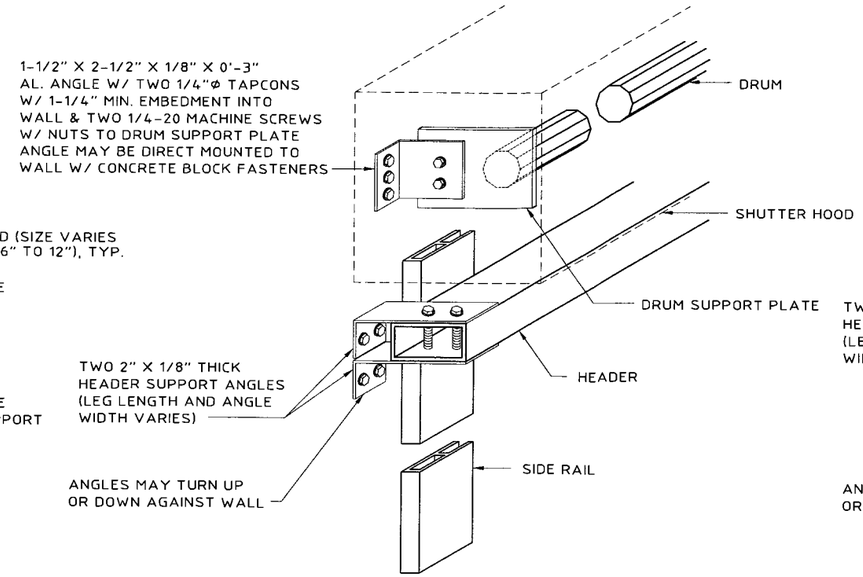

Ⓑ ALT. DRUM SUPPORT & HEADER TO WALL DETAIL

SCALE : 1-1/2" = 1'-0"

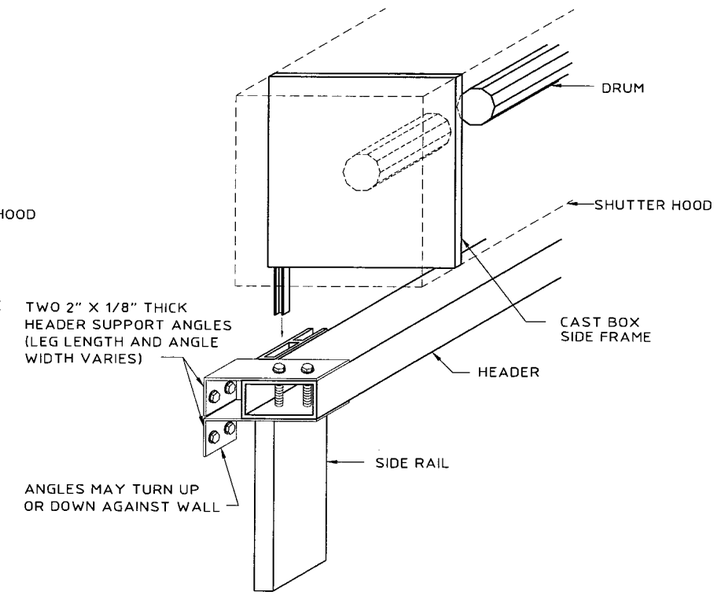

Ⓒ CAST DRUM SUPPORT & HEADER DETAIL

SCALE : 1-1/2" = 1'-0"

SLAT SPAN - SCHEDULE B

✱ FOR INSTALLATIONS ≤ 30'-0" ABOVE GRADE FOR SLAT SPANS < 42" SEPARATION FROM GLASS SHALL BE 3" MIN.
FOR SLAT SPANS > 42" < 56" SEPARATION FROM GLASS SHALL BE 3.25" MIN.

FOR INSTALLATIONS > 30'-0" ABOVE GRADE USE MIN. SEPARATION FROM GLASS INDICATED IN SCHEDULE BELOW.

NEGATIVE DESIGN LOAD (P.S.F.)	SINGLE SPAN	MIN. SEPARATION FROM GLASS > 30'	TWO (2) SPANS	MIN. SEPARATION FROM GLASS > 30'	THREE (3) OR MORE SPANS	MIN. SEPARATION FROM GLASS > 30'
	TOTAL SLAT SPAN (FT-IN)		TOTAL SLAT SPAN (FT-IN)		TOTAL SLAT SPAN (FT-IN)	
60.0	4 - 8	✱	4 - 8	✱	4 - 8	✱
70.0	4 - 6	✱	4 - 8	✱	4 - 8	✱
80.0	4 - 3	✱	4 - 5	✱	4 - 8	✱
90.0	4 - 1	2.96	4 - 2	1.93	4 - 6	2.47
100.0	4 - 0	2.78	4 - 0	1.86	4 - 3	2.34
110.0	3 - 9	2.64	3 - 9	1.80	4 - 1	2.24
120.0	3 - 7	2.52	3 - 7	1.75	3 - 11	2.15
130.0	3 - 6	2.42	3 - 6	1.70	3 - 9	2.08
140.0	3 - 4	2.33	3 - 4	1.67	3 - 7	2.01
150.0	3 - 3	2.25	3 - 3	1.64	3 - 6	1.96
160.0	3 - 2	2.19	3 - 2	1.61	3 - 5	1.91
170.0	3 - 0	2.13	3 - 0	1.59	3 - 3	1.87
180.0	2 - 11	2.08	2 - 11	1.56	3 - 2	1.83
190.0	2 - 10	2.03	2 - 10	1.55	3 - 1	1.80
200.0	2 - 9	1.99	2 - 9	1.53	3 - 0	1.77
210.0	2 - 9	1.95	2 - 9	1.51	2 - 11	1.74
220.0	2 - 8	1.92	2 - 8	1.50	2 - 11	1.72
230.0	2 - 7	1.89	2 - 7	1.49	2 - 10	1.70

NOTE: INTERPOLATE FOR SLAT SPANS AND DEFLECTION BETWEEN THOSE SHOWN.

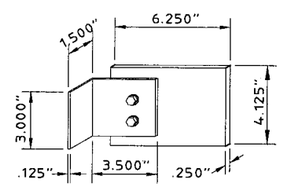

DRUM SUPPORT PLATE DETAIL

SCALE : 1-1/2" = 1'-0"

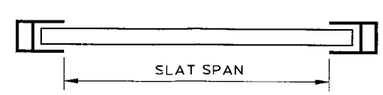

SINGLE SPAN

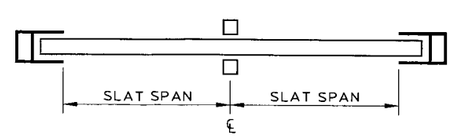

DOUBLE SPAN LAYOUT

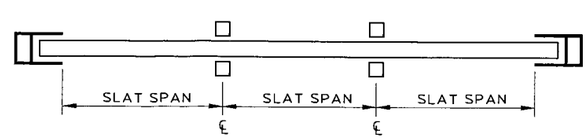

TRIPLE SPAN LAYOUT

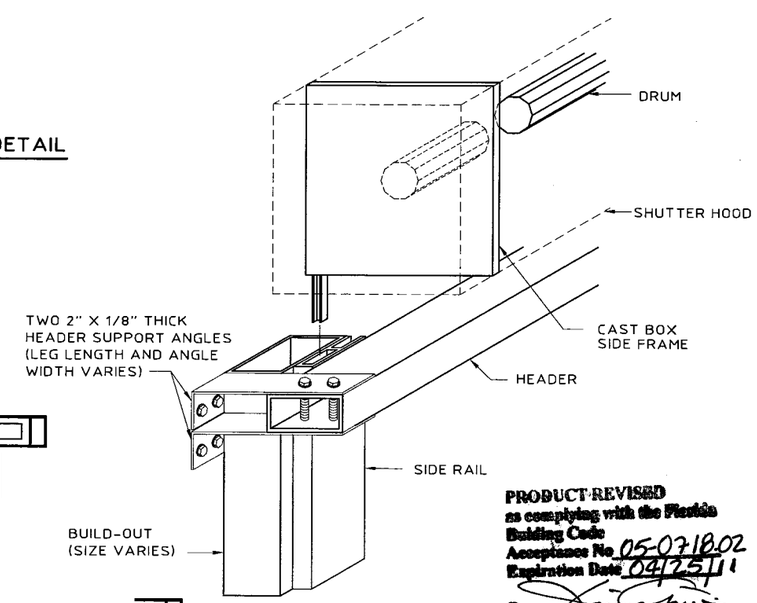

Ⓓ CAST DRUM SUPPORT & HEADER DETAIL W/ BUILD-OUT

SCALE : 1-1/2" = 1'-0"

PRODUCT REVISED
as complying with the Florida Building Code
Acceptance No. 05-0718.02
Expiration Date 04/25/11
By
Miami-Dade Product Control Division

Thornton-Tomasetti Group
330 N. Andrews Ave., Suite 450 • Ft. Lauderdale, FL 33301
Tel. (954) 522-3696 • Fax (954) 522-3691 • COA # 7319
Website: www.TheTTGroup.com

Copyright © 2005 Thornton-Tomasetti Group, Inc.

ROLL-UP SHUTTER

Manufacturers of Hurricane & Security Protection Products
HURST AWNING COMPANY, INC.
QUALITY SERVICE SINCE 1937
6865 N.W. 36th Avenue
Miami, Florida 33147
Phone: (305) 635-0900
Toll Free: (800) 327-0905
Fax: (305) 634-9078

V.J. Knezevich
Professional Engineer
FL License No.: PE 0010983

MAY 08 2006

revisions

no.	date	by	description
0	06/30/05	NW	PREVIOUSLY DRAWING NO. 96-380
0	05/10/06	NW	BECO COMMENTS

date 06/30/2005
scale AS NOTED
drawn by MCR
design by VJK
checked by VJK
drawing no. 05-349
sheet 4 of 12

Print Information: P:\FL1\Projects\KK5349.00\Drawings\R1-prg\05-349-04.dwg MCantu 05/10/2006 05:40:06pm 05/10/06 17:40

ANCHOR AND FASTENER - SCHEDULE C (FOR TENSION CONNECTION) (DETAILS Ⓒ, Ⓓ & Ⓖ)

Block = B
Concrete = C
4000 P.S.I.

POWERS/RAWL LOK/BOLT - TENSION IN CONCRETE OR BLOCK
POWERS/RAWL CALK-IN - TENSION IN CONCRETE OR BLOCK

ANCHOR TYPE	MATERIAL TYPE	STORM BAR REACTION (LBS.)	WALL MOUNT				ANGLE DIMENSIONS		STORM BAR OR HEADER TO ANGLES	
			DIAMETER (IN.)	EMBEDMENT DISTANCE (IN.)	QUANTITY OF FASTENERS PER ANGLE	CONCRETE OR BLOCK EDGE DISTANCE (IN.)	THICKNESS OF TWO (2) ANGLES (IN.)	MIN. (L) LENGTH OF EACH ANGLE (IN.)	No. OF TEK SCREWS EA. LEG EACH ANGLE	SIZE OF TEK SCREWS
LOK/BOLT	B	600	1/4	1-1/8	1	3	1/8	5.76	2	#12
LOK/BOLT	B	850	3/8	1-1/2	1	4-1/2	1/8	8.16	2	#12
CALK-IN	B	1140	3/8	1-1/4	1	4-1/2	1/8	10.94	2	#12
CALK-IN	B	1140	3/8	1-1/4	1	4-1/2	1/4	2.74	2	#12
LOK/BOLT	B	1700	3/8	1-1/2	2	4-1/2	1/4	5.25	3	#12
CALK-IN	C	2965	1/2	1-1/2	1	6	1/4	7.12	6	#14
CALK-IN	C	4810	3/8	1-1/4	2	4-1/2	1/4	11.54	7	#14
LOK/BOLT	C	5015	1/2	2-1/4	2	6	1/4	12.04	7	#14

ANCHOR AND FASTENER - SCHEDULE D (FOR SHEAR CONNECTION) (DETAILS Ⓔ & Ⓕ)

Block = B
Concrete = C
4000 P.S.I.

POWERS/RAWL LOK/BOLT - SHEAR IN CONCRETE OR BLOCK
POWERS/RAWL CALK-IN - SHEAR IN CONCRETE OR BLOCK

ANCHOR TYPE	MATERIAL TYPE	STORM BAR REACTION (LBS.)	WALL MOUNT				ANGLE DIMENSIONS		STORM BAR OR HEADER TO ANGLES	
			DIAMETER (IN.)	EMBEDMENT DISTANCE (IN.)	QUANTITY OF FASTENERS PER ANGLE	CONCRETE OR BLOCK EDGE DISTANCE (IN.)	THICKNESS OF TWO (2) ANGLES (IN.)	MIN. (L) LENGTH OF EACH ANGLE (IN.)	No. OF TEK SCREWS EA. LEG EACH ANGLE	SIZE OF TEK SCREWS
LOK/BOLT	B	635	1/4	1-1/8	1	3	1/8	SEE DETAIL B FOR L	2	#12
CALK-IN	B	670	1/4	7/8	1	3	1/8		2	#12
LOK/BOLT	B	1090	3/8	1-1/2	1	4-1/2	1/8		2	#12
CALK-IN	B	1215	3/8	1-1/4	1	4-1/2	1/8		3	#12
LOK/BOLT	B	2180	3/8	1-1/2	2	4-1/2	1/8		3	#14
CALK-IN	C	2900	1/2	1-1/2	1	6	1/8		4	#14
CALK-IN	C	4220	3/8	1-1/4	2	4-1/2	1/8		6	#14
CALK-IN	C	5800	1/2	1-1/2	2	6	1/8		8	#14

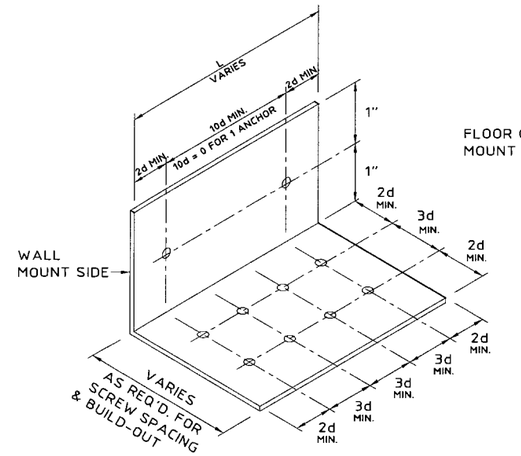

Ⓐ TENSION CONNECTION TO WALL FOR STORM BAR, HEADER, OR MULLION

N.T.S.

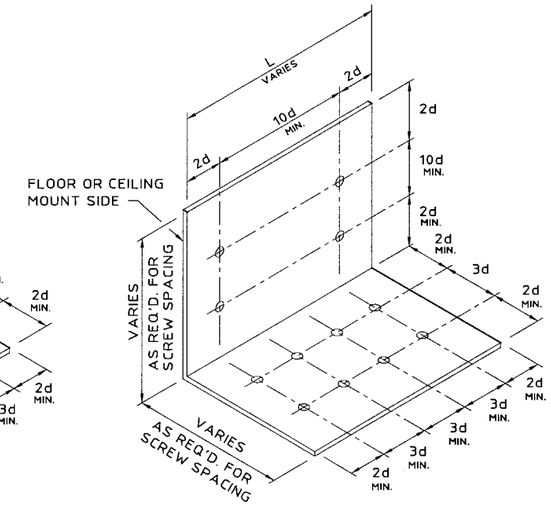

Ⓑ SHEAR CONNECTION TO FLOOR OR CEILING FOR STORM BAR, HEADER, OR MULLION

N.T.S.

NOTE:
ANGLE ISOMETRIC DEPICTS MAXIMUM NUMBER OF ANCHOR BOLTS & TEK SCREWS, AND THEIR ARRANGEMENT. FOR LESS ANCHORS OR TEK SCREWS, ANY 3d OR 10d DIMENSIONS MAY BE = 0.

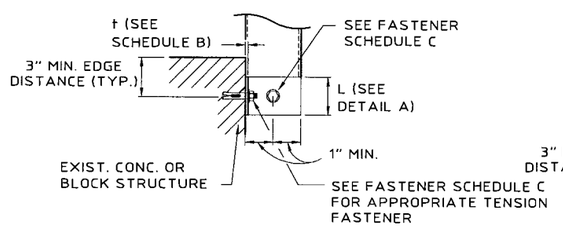

Ⓒ STORM BAR/MULLION TO WALL SECTION

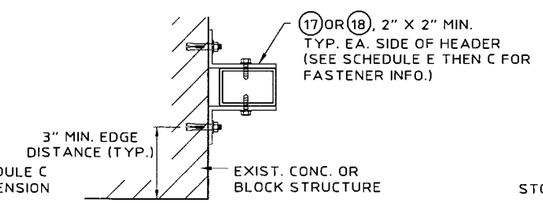

Ⓓ HEADER TO WALL SECTION

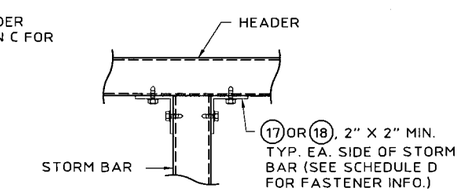

Ⓔ HEADER TO STORM BAR DETAIL

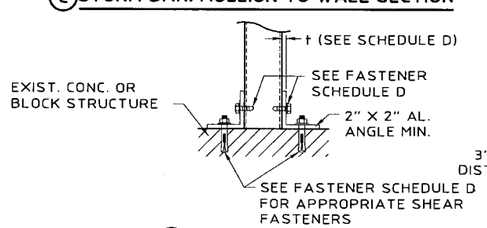

Ⓕ STORM BAR/MULLION TO FLOOR/CEILING DETAIL

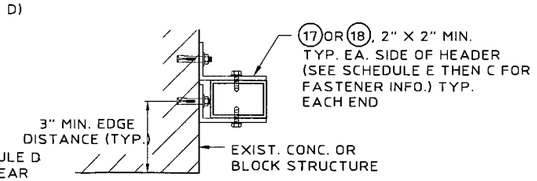

Ⓖ HEADER TO WALL SECTION

NUMBER OF STORM BARS	HEADER REACTION DETERMINATION SCHEDULE E HEADER REACTION EACH END (POUNDS)
1	0.5 X ONE STORM BAR END REACTION
2	1.0 X ONE STORM BAR END REACTION
3 OR MORE	1.5 X ONE STORM BAR END REACTION

SEE SCHEDULE C & D ABOVE FOR ANGLE, ANCHOR AND FASTENER QUANTITY AND SIZE.

WOOD FASTENING NOTES:

GALVANIZED STEEL OR 410 STAINLESS STEEL W/ FLUOROCARBON COATING LAG SCREW FOR WOOD, MAY BE USED AT LOADS, QUANTITY & EMBEDMENT INDICATED FOR BLOCK OR CONCRETE. EMBEDMENT SHALL BE AT THE CENTER OF A PRIMARY FRAMING MATERIAL SUCH AS A 2 X WOOD STUD OR A 2 X WOOD HEADER OR SILL PLATE.

STORM BAR/HEADER CONNECTION DETAILS

SCALE : 1-1/2" = 1'-0"

PRODUCT REVISED
as complying with the Florida Building Code
Acceptance No. 05-0718.02
Expiration Date 04/25/11
By
Miami-Dade Product Control Division

Thornton-Tomasetti Group
330 N. Andrews Ave., Suite 450 • Ft. Lauderdale, FL 33301
Tel. (954) 522-3690 • Fax (954) 522-3691 • COA # 7519
Website: www.TheTTGroup.com

Copyright © 2005 Thornton-Tomasetti Group, Inc.

ROLL-UP SHUTTER

Manufacturers of Hurricane & Security Protection Products
HURST AWNING COMPANY, INC. "QUALITY SERVICE SINCE 1957"
6865 N.W. 36th Avenue
Miami, Florida 33147
Phone: (305) 635-0900
Toll Free: (800) 327-0905
Fax: (305) 634-9078

V.J. Knezevich
Professional Engineer
FL License No.: PE 0010983

MAY 08 2006

revisions

no	date	by	description
0	06/30/05	NW	PREVIOUSLY DRAWING NO. 96-380
0	05/10/06	NW	BCCO COMMENTS

date 06/30/2005
scale AS NOTED
drawn by MCR
design by VJK
checked by VJK
drawing no. 05-349
sheet 5 of 12

Print Information: P:\FL1\Projects\KK5349.00\Drawings\R1-prg\05-349-05.dwg MCantu 05/10/2006 05:39:48pm 05/10/06 17:39

INTERIOR STORM BAR SPAN SCHEDULE (F) MULTIPLE SPAN CONDITION (2 SPANS)

POSITIVE DESIGN LOAD (P.S.F.)	SLAT SPAN OR STORM BAR SPACING (IN.)	STORM BAR TYPE AND MAXIMUM LENGTH (INCHES) - SEPARATION FROM GLASS = 2"									
		(4) 2" x 2"	(4) END REACTION (LBS.)	(5) 2" x 3"	(5) END REACTION (LBS.)	(7) 2" x 4"	(7) END REACTION (LBS.)	(10) 2" x 5"	(10) END REACTION (LBS.)	(12) 2" x 6"	(12) END REACTION (LBS.)
40.0	18	91	284	116	362	138	432	159	497	179	558
	24	84	352	108	449	129	536	148	617	166	692
	30	80	415	102	531	122	634	140	729	157	819
	36	73	455	97	606	116	727	134	836	150	939
	42	67	491	90	654	110	804	129	938	144	1054
	48	63	525	84	699	103	861	121	1009	138	1151
	56	58	567	78	755	96	932	112	1092	128	1247
50.0	18	86	335	110	428	131	511	150	587	169	660
	24	80	415	102	531	122	634	140	729	157	819
	30	71	464	95	618	115	749	132	862	149	968
	36	65	509	87	677	107	833	125	976	142	1109
	42	60	549	80	731	99	902	116	1057	132	1205
	48	56	587	75	782	93	964	109	1132	124	1292
	56	52	634	69	845	86	1042	101	1226	115	1399
60.0	18	82	384	105	491	125	586	144	674	161	756
	24	73	455	97	606	116	727	134	836	150	939
	30	65	509	87	677	107	833	125	976	142	1109
	36	59	557	79	742	98	915	114	1072	130	1223
	42	55	602	73	801	90	988	106	1161	121	1325
	48	51	643	69	856	85	1056	99	1244	114	1420
	56	48	695	63	925	78	1141	92	1346	105	1538
70.0	18	78	425	101	551	120	658	138	756	155	849
	24	67	491	90	654	110	804	129	938	144	1054
	30	60	549	80	731	99	902	116	1057	132	1205
	36	55	602	73	801	90	988	106	1161	121	1325
	42	51	650	68	865	84	1067	98	1257	112	1435
	48	48	695	63	925	78	1141	92	1346	105	1538
	56	44	751	59	999	72	1233	86	1457	98	1665
80.0	18	73	455	97	606	116	727	134	836	150	939
	24	63	525	84	699	103	861	121	1009	138	1151
	30	56	587	75	782	93	964	109	1132	124	1292
	36	51	643	69	856	85	1056	99	1244	114	1420
	42	48	695	63	925	78	1141	92	1346	105	1538
	48	45	743	59	989	73	1220	87	1442	99	1647
	54	42	786	56	1047	69	1291	82	1527	94	1746
90.0	18	69	482	91	642	112	789	130	913	146	1025
	24	59	557	79	742	98	915	114	1072	130	1223
	30	53	623	71	829	87	1023	103	1203	117	1373
	36	49	682	65	908	80	1121	94	1321	107	1509
	42	45	737	60	981	74	1210	87	1430	100	1634
	48	42	788	56	1049	69	1294	82	1530	93	1750
	51	41	810	54	1078	67	1330	79	1573	91	1800
100.0	12	80	415	102	531	122	634	140	729	157	819
	18	65	509	87	677	107	833	125	976	142	1109
	24	56	587	75	782	93	964	109	1132	124	1292
	30	50	657	67	874	83	1078	98	1270	111	1450
	36	46	719	61	958	76	1181	89	1395	102	1593
	42	43	777	57	1034	70	1276	83	1509	95	1725
	48	40	831	53	1107	65	1365	77	1614	89	1850
110.0	12	76	436	100	571	119	681	137	783	153	879
	18	62	533	83	710	102	875	119	1025	136	1169
	24	54	616	72	820	88	1011	104	1189	118	1357
	30	48	689	64	917	79	1131	93	1334	106	1523
	36	44	754	58	1004	72	1239	85	1465	97	1674
	42	41	815	54	1085	67	1338	79	1583	90	1812
	46	39	851	52	1133	64	1398	76	1653	87	1896

INTERIOR STORM BAR SPAN SCHEDULE (G) MULTIPLE SPAN CONDITION (2 SPANS)

POSITIVE DESIGN LOAD (P.S.F.)	SLAT SPAN OR STORM BAR SPACING (IN.)	STORM BAR TYPE AND MAXIMUM LENGTH (INCHES) - SEPARATION FROM GLASS = 1-1/2"									
		(4) 2" x 2"	(4) END REACTION (LBS.)	(5) 2" x 3"	(5) END REACTION (LBS.)	(7) 2" x 4"	(7) END REACTION (LBS.)	(10) 2" x 5"	(10) END REACTION (LBS.)	(12) 2" x 6"	(12) END REACTION (LBS.)
40.0	18	76	238	97	304	116	363	134	418	150	469
	24	71	296	91	378	108	451	124	519	140	582
	30	67	350	86	447	102	533	118	613	132	688
	36	64	401	82	512	98	611	112	703	126	789
	42	62	450	79	575	94	686	108	789	121	886
	48	60	498	76	635	91	758	105	872	118	979
	56	57	559	73	713	88	851	101	979	113	1099
50.0	18	72	282	92	360	110	430	126	494	142	555
	24	67	350	86	447	102	533	118	613	132	688
	30	64	413	81	528	97	630	111	725	125	814
	36	61	474	77	605	92	722	106	831	119	933
	42	58	532	75	680	89	811	102	933	115	1047
	48	56	587	72	751	86	896	99	1031	111	1158
	56	52	634	69	843	83	1006	95	1157	107	1300
60.0	18	69	323	88	413	105	493	121	566	136	636
	24	64	401	82	512	98	611	112	703	126	789
	30	61	474	77	605	92	722	106	831	119	933
	36	58	544	74	694	88	828	102	953	114	1070
	42	55	602	71	779	85	930	98	1069	110	1201
	48	51	643	69	856	82	1028	95	1182	106	1327
	56	48	695	63	925	78	1141	91	1327	102	1490
70.0	18	66	363	85	463	101	553	116	636	131	714
	24	62	450	79	575	94	686	108	789	121	886
	30	58	532	75	680	89	811	102	933	115	1047
	36	55	602	71	779	85	930	98	1069	110	1201
	42	51	650	68	865	82	1044	94	1200	106	1348
	48	48	695	63	925	78	1141	91	1327	102	1490
	56	44	751	59	999	72	1233	86	1457	98	1665
80.0	18	64	401	82	512	98	611	112	703	126	789
	24	60	498	76	635	91	758	105	872	118	979
	30	56	587	72	751	86	896	99	1031	111	1158
	36	51	643	69	856	82	1028	95	1182	106	1327
	42	48	695	63	925	78	1141	91	1327	102	1490
	48	45	743	59	989	73	1220	87	1442	99	1647
	54	42	786	56	1047	69	1291	82	1527	94	1746
90.0	18	62	438	80	559	95	668	109	768	123	862
	24	58	544	74	694	88	828	102	953	114	1070
	30	53	623	70	821	84	979	96	1126	108	1265
	36	49	682	65	908	80	1121	92	1291	103	1450
	42	45	737	60	981	74	1210	87	1430	99	1628
	48	42	788	56	1049	69	1294	82	1530	93	1750
	51	41	810	54	1078	67	1330	79	1573	91	1800
100.0	12	67	350	86	447	102	533	118	613	132	688
	18	61	474	77	605	92	722	106	831	119	933
	24	56	587	72	751	86	896	99	1031	111	1158
	30	50	657	67	874	81	1060	94	1219	105	1369
	36	46	719	61	958	76	1181	89	1395	100	1569
	42	43	777	57	1034	70	1276	83	1509	95	1725
	48	40	831	53	1107	65	1365	77	1614	89	1850
110.0	12	66	376	84	480	100	573	115	658	129	739
	18	59	509	76	650	90	776	104	892	117	1002
	24	54	616	70	807	84	963	97	1107	109	1243
	30	48	689	64	917	79	1131	91	1309	103	1470
	36	44	754	58	1004	72	1239	85	1465	97	1674
	42	41	815	54	1085	67	1338	79	1583	90	1812
	46	39	851	52	1133	64	1398	76	1653	87	1896

NOTES:

1. INTERPOLATE FOR STORM BAR SPANS AND REACTIONS BETWEEN THOSE SHOWN ON THIS SHEET.
2. TO USE DOUBLE STORM BAR, ENTER CHART AT REQUIRED DESIGN LOAD AND CHOOSE THE DESIRED STORM BAR BASED ON HALF OF THE ACTUAL SLAT SPAN OR STORM BAR SPACING.

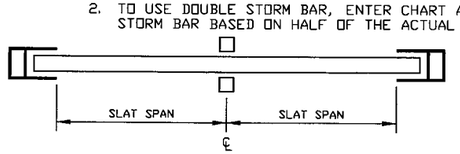

DOUBLE SPAN LAYOUT

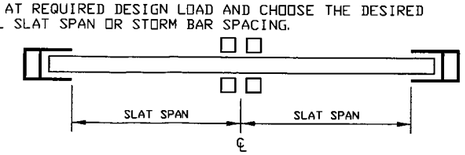

DOUBLE STORM BAR LAYOUT

PRODUCT REVISED
as complying with the Florida
Building Code
Acceptance No. 05-0718.02
Expiration Date 04/25/11
By
Miami Dade Product Control
Division

Thornton-Tomasetti Group
330 N. Andrews Ave., Suite 450 • Ft. Lauderdale, FL 33301
Tel. (954) 522-3690 • Fax (954) 522-3691 • COA # 7519
Website: www.TheTTGroup.com

Copyright © 2005 Thornton-Tomasetti Group, Inc.

ROLL-UP SHUTTER

Manufacturers of Hurricane & Security Protection Products
6865 N.W. 36th Avenue
Miami, Florida 33147
Phone: (305) 635-0900
Toll Free: (800) 327-0905
Fax: (305) 634-9078
HURST AWNING COMPANY, INC. "QUALITY SERVICE SINCE 1937"

V.J. Knezevich
Professional Engineer
FL License No.: PE 0010983

MAY 08 2006

revisions

no	date	by	description
0	06/30/05	NW	PREVIOUSLY DRAWING NO. 96-380
0	05/10/06	NW	BCCO COMMENTS

date 06/30/2005
scale AS NOTED
drawn by MCR
design by VJK
checked by VJK
drawing no. 05-349
sheet 6 of 12

Print Information: P:\FL1\Projects\KK5349.00\Drawings\R1-prg\05-349-06.dwg MCantu 05/10/2006 05:39:30pm 05/10/06 17:39

Print Information: P:\FL1\Projects\KK5349.00\Drawings\R1-prg\05-349-07.dwg MCantu 05/10/2006 05:39:14pm 05/10/06 17:39

EXTERIOR STORM BAR SPAN SCHEDULE (H) MULTIPLE SPAN CONDITION (2 SPANS)

NEGATIVE DESIGN LOAD (P.S.F.)	SLAT SPAN OR STORM BAR SPACING (IN.)	STORM BAR TYPE AND MAXIMUM LENGTH (INCHES)									
		(6) 2" x 3"	(6) END REACTION (LBS.)	(8) 2" x 4"	(8) END REACTION (LBS.)	(11) 2" x 5"	(11) END REACTION (LBS.)	(13) 2" x 6"	(13) END REACTION (LBS.)	(15) 2" x 8"	(15) END REACTION (LBS.)
40.0	18	145	453	158	495	205	640	232	726	283	886
	24	126	526	138	574	179	744	203	844	248	1032
	30	113	590	124	644	160	836	182	949	223	1162
	36	103	646	113	708	147	919	167	1044	205	1279
	42	96	698	105	766	136	995	155	1131	190	1388
	48	90	746	98	821	128	1066	145	1212	179	1489
	56	83	806	91	888	119	1155	135	1314	166	1614
50.0	18	130	508	142	555	184	719	209	816	255	997
	24	113	590	124	644	160	836	182	949	223	1162
	30	101	659	111	723	144	938	164	1066	201	1307
	36	92	722	102	794	132	1031	150	1172	184	1439
	42	86	780	94	859	123	1117	139	1270	171	1560
	48	80	834	88	919	115	1197	131	1362	161	1674
	56	74	901	82	993	107	1296	121	1475	149	1814
60.0	18	119	558	130	610	169	791	192	898	234	1099
	24	103	646	113	708	147	919	167	1044	205	1279
	30	92	722	102	794	132	1031	150	1172	184	1439
	36	84	791	93	872	121	1133	137	1289	169	1584
	42	78	855	86	942	112	1227	128	1396	157	1717
	48	73	914	81	1007	105	1315	120	1497	147	1841
	56	68	987	75	1088	98	1424	111	1621	137	1996
70.0	18	111	604	121	661	157	857	178	973	218	1192
	24	96	698	105	766	136	995	155	1131	190	1388
	30	86	780	94	859	123	1117	139	1270	171	1560
	36	78	855	86	942	112	1227	128	1396	157	1717
	42	72	923	80	1017	104	1329	119	1513	146	1861
	48	68	987	75	1088	98	1424	111	1621	137	1996
	56	63	1066	69	1175	91	1541	103	1755	127	2163
80.0	18	103	646	113	708	147	919	167	1044	205	1279
	24	90	746	98	821	128	1066	145	1212	179	1489
	30	80	834	88	919	115	1197	131	1362	161	1674
	36	73	914	81	1007	105	1315	120	1497	147	1841
	42	68	987	75	1088	98	1424	111	1621	137	1996
	48	63	1055	70	1163	92	1525	104	1737	128	2140
	54	60	1116	66	1231	87	1617	99	1842	122	2270
90.0	18	97	685	107	752	139	977	158	1110	194	1361
	24	84	791	93	872	121	1133	137	1289	169	1584
	30	75	885	83	975	109	1272	124	1447	152	1780
	36	69	969	76	1068	99	1397	113	1591	139	1958
	42	64	1047	70	1154	92	1513	105	1723	129	2122
	48	60	1119	66	1233	86	1620	98	1846	121	2275
	51	58	1150	64	1267	84	1666	96	1898	118	2340
100.0	12	113	590	124	644	160	836	182	949	223	1162
	18	92	722	102	794	132	1031	150	1172	184	1439
	24	80	834	88	919	115	1197	131	1362	161	1674
	30	72	932	79	1028	103	1343	117	1529	144	1881
	36	65	1021	72	1126	94	1475	108	1680	132	2069
	42	61	1103	67	1216	88	1597	100	1819	123	2242
	48	57	1181	62	1301	82	1712	93	1951	115	2405
110.0	12	108	619	118	677	153	878	174	997	213	1222
	18	88	758	97	834	126	1084	143	1232	176	1513
	24	76	875	84	964	110	1257	125	1431	154	1759
	30	68	978	75	1078	98	1411	112	1606	138	1977
	36	62	1071	69	1181	90	1549	103	1765	127	2174
	42	58	1157	64	1275	84	1677	95	1911	117	2356
	46	55	1209	61	1332	80	1755	91	1999	113	2466
120.0	12	103	646	113	708	147	919	167	1044	205	1279
	18	84	791	93	872	121	1133	137	1289	169	1584
	24	73	914	81	1007	105	1315	120	1497	147	1841
	30	65	1021	72	1126	94	1475	108	1680	132	2069
	36	60	1119	66	1233	86	1620	98	1846	121	2275
	42	55	1209	61	1332	80	1754	91	1999	113	2465
	44	54	1236	60	1362	78	1793	89	2045	110	2522
130.0	12	99	672	109	737	141	958	161	1088	197	1335
	18	81	824	89	908	116	1181	132	1344	163	1652
	24	70	951	77	1048	101	1370	115	1560	142	1920
	30	63	1063	69	1172	91	1537	103	1751	127	2157
	36	57	1165	63	1284	83	1689	95	1924	117	2372
	42	53	1258	59	1386	77	1826	88	2083	108	2570
	42	53	1261	58	1389	77	1829	88	2087	108	2575

NOTES:
1. INTERPOLATE FOR STORM BAR SPANS AND REACTIONS BETWEEN THOSE SHOWN ON THIS SHEET.
2. TO USE DOUBLE STORM BAR, ENTER CHART AT REQUIRED DESIGN LOAD AND CHOOSE THE DESIRED STORM BAR BASED ON HALF OF THE ACTUAL SLAT SPAN OR STORM BAR SPACING.

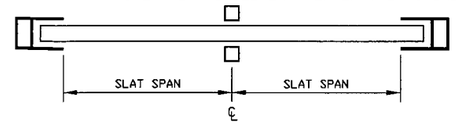

DOUBLE SPAN LAYOUT

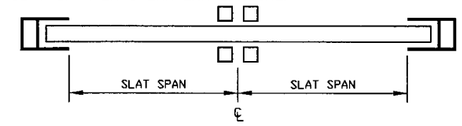

DOUBLE STORM BAR LAYOUT

PRODUCT REVISED
as complying with the Florida Building Code
Acceptance No. 05-0718.02
Expiration Date 09/25/11
By
Miami-Dade Product Control Division

Thornton-Tomasetti Group
330 N. Andrews Ave., Suite 450 • Ft. Lauderdale, FL 33301
Tel. (954) 522-3690 • Fax (954) 522-3691 • COA # 7519
Website: www.TheTTGroup.com

Copyright © 2005 Thornton-Tomasetti Group, Inc.

ROLL-UP SHUTTER

Manufacturers of Hurricane & Security Protection Products
HURST AWNING COMPANY, INC. QUALITY SERVICE SINCE 1957
6865 N.W. 36th Avenue
Miami, Florida 33147
Phone: (305) 635-0900
Toll Free: (800) 327-0905
Fax: (305) 634-9078

V.J. Knezevich
Professional Engineer
FL License No.: PE-0010983

MAY 08 2006

revisions

no	date	by	description
0	06/30/05	NW	PREVIOUSLY DRAWING NO. 96-380
0	05/10/06	NW	BCCO COMMENTS

date	06/30/2005
scale	AS NOTED
drawn by	MCR
design by	VJK
checked by	VJK
drawing no.	05-349

EXTERIOR STORM BAR SPAN SCHEDULE (H) MULTIPLE SPAN CONDITION (2 SPANS)

NEGATIVE DESIGN LOAD (P.S.F.)	SLAT SPAN OR STORM BAR SPACING (IN.)	STORM BAR TYPE AND MAXIMUM LENGTH (INCHES)									
		(6) 2" x 3"	(6) END REACTION (LBS.)	(8) 2" x 4"	(8) END REACTION (LBS.)	(11) 2" x 5"	(11) END REACTION (LBS.)	(13) 2" x 6"	(13) END REACTION (LBS.)	(15) 2" x 8"	(15) END REACTION (LBS.)
140.0	12	96	698	105	766	136	995	155	1131	190	1388
	18	78	855	86	942	112	1227	128	1396	157	1717
	24	68	987	75	1088	98	1424	111	1621	137	1996
	30	61	1103	67	1216	88	1597	100	1819	123	2242
	36	55	1209	61	1332	80	1754	91	1999	113	2465
	42	51	1305	56	1439	74	1895	85	2164	105	2670
	41	52	1284	57	1415	75	1864	86	2128	106	2625
150.0	12	92	722	102	794	132	1031	150	1172	184	1439
	12	92	722	102	794	132	1031	150	1172	184	1439
	18	75	885	83	975	109	1272	124	1447	152	1780
	24	65	1021	72	1126	94	1475	108	1680	132	2069
	30	58	1142	64	1259	85	1655	97	1885	119	2324
	36	53	1251	59	1379	77	1816	88	2071	109	2555
	39	51	1306	56	1440	74	1896	85	2166	105	2672
160.0	12	90	746	98	821	128	1066	145	1212	179	1489
	12	90	746	98	821	128	1066	145	1212	179	1489
	18	73	914	81	1007	105	1315	120	1497	147	1841
	24	63	1055	70	1163	92	1525	104	1737	128	2140
	30	57	1180	62	1300	82	1711	94	1949	115	2403
	36	52	1292	57	1424	75	1875	86	2141	106	2642
	38	50	1328	55	1463	73	1927	83	2202	103	2718
170.0	12	87	769	96	847	124	1100	141	1251	174	1537
	12	87	769	96	847	124	1100	141	1251	174	1537
	18	71	942	78	1038	102	1357	116	1544	143	1901
	24	61	1087	68	1199	89	1573	101	1792	125	2208
	30	55	1216	61	1340	80	1764	91	2011	112	2480
	36	50	1332	55	1468	73	1933	83	2209	103	2726
	37	50	1348	55	1486	72	1956	82	2237	101	2761
180.0	12	84	791	93	872	121	1133	137	1289	169	1584
	12	84	791	93	872	121	1133	137	1289	169	1584
	18	69	969	76	1068	99	1397	113	1591	139	1958
	24	60	1119	66	1233	86	1620	98	1846	121	2275
	30	53	1251	59	1379	77	1816	88	2071	109	2555
	36	49	1370	54	1510	71	1989	81	2275	100	2808
	36	49	1367	54	1507	71	1984	81	2270	100	2802
190.0	12	82	813	91	896	118	1166	134	1326	165	1629
	12	82	813	91	896	118	1166	134	1326	165	1629
	18	67	996	74	1097	97	1437	110	1636	136	2014
	24	58	1150	64	1267	84	1666	96	1898	118	2340
	30	52	1285	57	1417	75	1865	86	2130	106	2628
	36	47	1408	52	1552	69	2043	79	2339	97	2888
	35	48	1386	53	1528	70	2011	80	2302	99	2841
200.0	12	80	834	88	919	115	1197	131	1362	161	1674
	12	80	834	88	919	115	1197	131	1362	161	1674
	12	80	834	88	919	115	1197	131	1362	161	1674
	18	65	1021	72	1126	94	1475	108	1680	132	2069
	24	57	1180	62	1300	82	1711	94	1949	115	2403
	30	51	1319	56	1453	73	1914	84	2187	104	2699
	34	48	1404	52	1547	69	2037	79	2332	98	2879
210.0	12	78	855	86	942	112	1227	128	1396	157	1717
	12	78	855	86	942	112	1227	128	1396	157	1717
	12	78	855	86	942	112	1227	128	1396	157	1717
	18	64	1047	70	1154	92	1513	105	1723	129	2122
	24	55	1209	61	1332	80	1754	91	1999	113	2465
	30	49	1351	54	1489	72	1961	82	2242	101	2768
	33	47	1421	52	1566	68	2062	78	2362	96	2916
220.0	12	76	875	84	964	110	1257	125	1431	154	1759
	12	76	875	84	964	110	1257	125	1431	154	1759
	12	76	875	84	964	110	1257	125	1431	154	1759
	18	62	1071	69	1181	90	1549	103	1765	127	2174
	24	54	1237	59	1363	78	1795	89	2047	110	2525
	30	48	1383	53	1524	70	2007	80	2297	99	2835
	32	46	1438	51	1585	67	2086	77	2390	95	2951
230.0	12	75	894	82	986	107	1286	122	1464	150	1801
	12	75	894	82	986	107	1286	122	1464	150	1801
	12	75	894	82	986	107	1286	122	1464	150	1801
	18	61	1095	67	1207	88	1585	100	1806	124	2225
	24	53	1265	58	1394	77	1836	87	2095	108	2584
	30	47	1414	52	1559	69	2052	78	2350	97	2901
	32	46	1454	51	1602	67	2110	76	2418	94	2986

NOTES:
1. INTERPOLATE FOR STORM BAR SPANS AND REACTIONS BETWEEN THOSE SHOWN ON THIS SHEET.
2. TO USE DOUBLE STORM BAR, ENTER CHART AT REQUIRED DESIGN LOAD AND CHOOSE THE DESIRED STORM BAR BASED ON HALF OF THE ACTUAL SLAT SPAN OR STORM BAR SPACING.

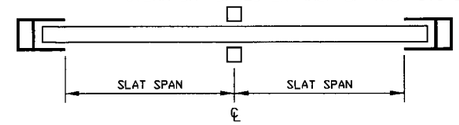

DOUBLE SPAN LAYOUT

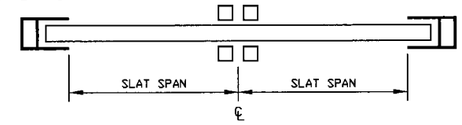

DOUBLE STORM BAR LAYOUT

PRODUCT REVISED
as complying with the Florida
Building Code
Acceptance No. 05-0718.02
Expiration Date 04/25/11
By
Miami-Dade Product Control
Division

Thornton-Tomasetti Group
330 N. Andrews Ave. Suite 450 • Ft. Lauderdale, Fl. 33301
Tel. (954) 522-3690 • Fax (954) 522-3691 • COA # 7519
Website: www.TheTTGroup.com

Copyright © 2005 Thornton-Tomasetti Group, Inc.

ROLL-UP SHUTTER

Manufacturers of Hurricane & Security Protection Products
HURST AWNING COMPANY, INC.
"QUALITY SERVICE SINCE 1937"
6865 N.W. 36th Avenue
Miami, Florida 33147
Phone: (305) 635-0900
Toll Free: (800) 327-0905
Fax: (305) 634-9078

V.J. Knezevich
Professional Engineer
FL License No.: PE 0010983

MAY 08 2006

revisions

no	date	by	description
0	06/30/05	NW	PREVIOUSLY DRAWING NO. 96-380
0	05/10/06	NW	BCCO COMMENTS

date 06/30/2005
scale AS NOTED
drawn by MCR
design by VJK
checked by VJK
drawing no. 05-349
sheet 8 of 12

Print Information: P:\FL1\Projects\KK5349.00\Drawings\R1-prg\05-349-08.dwg MContu 05/10/2006 05:39:01pm 05/10/06 17:38

PERMANENT MULLION SPAN SCHEDULE (J)

POSTIVE OR NEGATIVE DESIGN LOAD (P.S.F.)	SLAT SPAN OR STORM BAR SPACING (IN.)	MULLION MAXIMUM LENGTH (INCHES)									
		MULLION TYPE								DEFLECTION LIMIT L/180	
		(5) 2" x 3"	(5) END REACTION (LBS.)	(7) 2" x 4"	(7) END REACTION (LBS.)	(10) 2" x 5"	(10) END REACTION (LBS.)	(12) 2" x 6"	(12) END REACTION (LBS.)	(14) 2" x 8"	(14) END REACTION (LBS.)
140.0	12	68	677	86	858	104	1033	121	1206	138	1377
	18	62	804	79	1018	95	1226	111	1431	125	1616
	24	58	921	74	1166	89	1403	101	1602	114	1796
	30	55	1031	69	1293	82	1529	93	1749	105	1961
	36	52	1127	64	1390	76	1644	87	1884	98	2113
	42	49	1200	60	1480	71	1751	82	2011	92	2256
	45	47	1240	58	1530	69	1810	79	2080	89	2334
150.0	12	66	709	84	898	101	1082	118	1263	135	1441
	18	61	842	77	1065	93	1284	108	1494	121	1675
	24	57	964	72	1221	86	1453	98	1660	110	1861
	30	54	1080	67	1338	79	1583	90	1812	101	2032
	36	50	1166	62	1439	73	1701	84	1952	94	2190
	42	47	1242	58	1532	69	1812	79	2084	89	2338
	44	46	1265	57	1561	68	1846	78	2123	87	2382
160.0	12	65	740	82	937	99	1129	116	1318	132	1505
	12	65	740	82	937	99	1129	116	1318	132	1505
	18	60	879	76	1112	91	1340	105	1545	118	1732
	24	56	1007	70	1270	83	1502	95	1717	107	1925
	30	52	1120	65	1382	76	1634	88	1873	98	2101
	36	49	1205	60	1486	71	1757	82	2018	92	2264
	42	46	1289	56	1591	66	1881	76	2165	86	2429
170.0	12	64	771	81	976	97	1176	113	1372	129	1564
	12	64	771	81	976	97	1176	113	1372	129	1564
	18	58	915	74	1158	89	1395	102	1594	114	1787
	24	55	1048	68	1309	81	1548	92	1771	104	1986
	30	51	1155	63	1424	74	1685	85	1933	95	2168
	36	47	1242	58	1531	69	1811	79	2082	89	2336
	41	45	1313	55	1619	65	1915	75	2204	84	2474
180.0	12	63	801	79	1014	95	1221	111	1426	126	1611
	12	63	801	79	1014	95	1221	111	1426	126	1611
	18	57	950	73	1203	87	1437	99	1642	111	1841
	24	54	1089	66	1347	78	1593	90	1824	101	2046
	30	49	1188	61	1466	72	1734	83	1990	93	2233
	36	46	1278	57	1576	67	1864	77	2144	87	2406
	40	44	1335	54	1646	64	1947	74	2241	83	2517
190.0	12	61	830	78	1051	94	1266	109	1478	123	1657
	12	61	830	78	1051	94	1266	109	1478	123	1657
	18	56	985	71	1247	85	1478	97	1688	108	1893
	24	52	1122	65	1384	76	1636	87	1876	98	2104
	30	48	1221	59	1506	70	1781	81	2046	90	2296
	36	45	1313	55	1619	65	1915	75	2204	84	2474
	39	43	1356	53	1673	63	1978	73	2277	82	2559
200.0	12	60	859	76	1088	92	1310	107	1518	120	1702
	12	60	859	76	1088	92	1310	107	1518	120	1702
	18	55	1020	70	1282	82	1516	94	1734	106	1944
	24	51	1151	63	1420	74	1679	85	1926	96	2160
	30	47	1253	58	1545	68	1827	79	2101	88	2357
	36	44	1347	54	1661	64	1965	73	2262	82	2540
	38	43	1377	53	1698	62	2009	72	2312	80	2599
210.0	12	59	888	75	1124	91	1354	104	1557	117	1745
	12	59	888	75	1124	91	1354	104	1557	117	1745
	18	55	1053	68	1314	80	1554	92	1778	103	1993
	24	50	1179	61	1455	73	1720	83	1975	93	2215
	30	46	1284	56	1583	67	1873	77	2155	86	2417
	36	43	1380	52	1702	62	2013	71	2317	80	2605
	37	42	1397	52	1723	61	2038	71	2346	79	2638
220.0	12	58	916	74	1159	89	1396	102	1595	114	1788
	12	58	916	74	1159	89	1396	102	1595	114	1788
	12	58	916	74	1159	89	1396	102	1595	114	1788
	18	54	1086	66	1344	79	1590	90	1821	101	2042
	24	49	1207	60	1489	71	1761	81	2023	91	2269
	30	45	1314	55	1620	65	1917	75	2206	84	2476
	36	41	1416	51	1747	60	2066	70	2378	78	2675
230.0	12	58	943	73	1194	87	1429	100	1632	112	1829
	12	58	943	73	1194	87	1429	100	1632	112	1829
	12	58	943	73	1194	87	1429	100	1632	112	1829
	18	53	1114	65	1375	77	1626	88	1863	99	2089
	24	48	1234	59	1522	69	1800	80	2069	89	2322
	30	44	1343	54	1657	64	1960	73	2256	82	2534
	35	41	1435	50	1770	60	2094	69	2410	77	2712

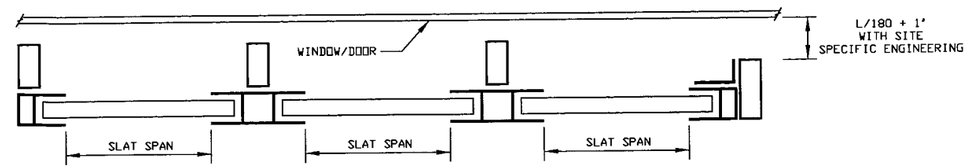

MULLION LAYOUT

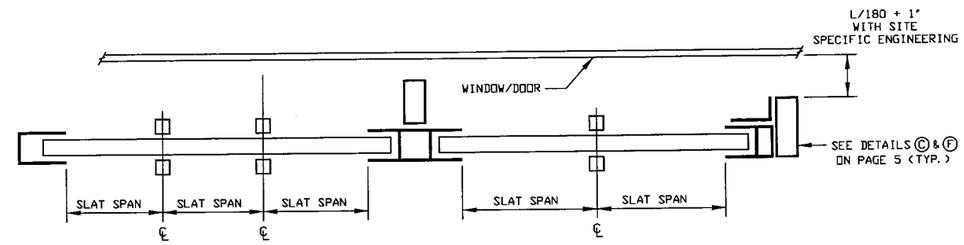

MULLION & STORM BAR LAYOUT

NOTES:
1. INTERPOLATE FOR MULLION SPANS AND REACTIONS BETWEEN THOSE SHOWN ON THIS SHEET.
2. TO USE DOUBLE MULLION, ENTER CHART AT REQUIRED DESIGN LOAD AND CHOOSE THE DESIRED MULLION BASED ON HALF OF THE ACTUAL SLAT SPAN.

PRODUCT REVISED
as complying with the Florida Building Code
Acceptance No. 05-0718.02
Expiration Date 04/25/11
By
Miami Dade Product Control Division

Thornton-Tomasetti Group
330 N. Andrews Ave. Suite 450 • Ft. Lauderdale, Fl. 33301
Tel. (954) 522-3690 • Fax (954) 522-3691 • COA # 7519
Website: www.TheTTGroup.com

Copyright © 2005 Thornton-Tomasetti Group, Inc.

ROLL-UP SHUTTER

Manufacturers of Hurricane & Security Protection Products
6865 N.W. 36th Avenue
Miami, Florida 33147
Phone: (305) 635-0900
Toll Free: (800) 327-0905
Fax: (305) 634-9078
HURST AWNING COMPANY, INC. "QUALITY SERVICE SINCE 1957"

V.J. Knezevich
Professional Engineer
FL License No.: PE 0010983
MAY 08 2006

revisions

no	date	by	description
0	06/30/05	NW	PREVIOUSLY DRAWING NO. 96-380
0	05/10/06	NW	BCCO COMMENTS

date 06/30/2005
scale AS NOTED
drawn by MCR
design by VJK
checked by VJK
drawing no. 05-349
sheet 10 of 12

Print Information: P:\FL1\Projects\KK5349.00\Drawings\R1-prg\05-349-10.dwg MCantu 05/10/2006 05:38:31pm MCantu 05/10/06 17:38

PRODUCT REVISED
as complying with the Florida
Building Code
Acceptance No. 05-0316.02
Expiration Date 04/25/11
By
Miami-Dade Product Control
Division

HEADER LENGTH OR SHUTTER WIDTH SCHEDULE (K)

HEADER TYPE AND MAXIMUM LENGTH (INCHES)

POSITIVE OR NEGATIVE DESIGN LOAD (P.S.F.)	MAXIMUM SLAT SPAN USED (IN.)	(5) 2" x 3" STORM BAR HEIGHT (IN.) 48	60	72	84	96	120	180	240	(5) 2" x 3" STORM BAR HEIGHT (IN.) 48	60	72	84	96	120	180	240	(5) 2" x 3" STORM BAR HEIGHT (IN.) 48	60	72	84	96	120	180	240	(5) 2" x 3" STORM BAR HEIGHT (IN.) 48	60	72	84	96	120	180	240	(5) 2" x 3" STORM BAR HEIGHT (IN.) 48	60	72	84	96	120	180	240
40.0	18	132	119	108	100	94	84	69	59	161	145	132	123	115	103	85	73	188	169	155	144	135	121	99	87	214	192	176	164	154	138	114	99	263	237	217	202	190	171	141	122
	24	132	119	108	100	94	84	69	60	161	145	132	123	115	103	85	73	188	169	155	144	135	121	99	87	214	192	176	164	154	138	114	99	263	237	217	202	190	171	141	122
	30	132	119	108	100	94	85	69	60	161	145	132	123	115	103	85	74	188	169	155	144	135	121	99	87	214	192	176	164	154	138	114	99	263	237	217	202	190	171	141	122
	36	132	119	108	101	95	85	61	53	161	145	132	123	115	104	85	74	188	169	155	144	135	121	101	87	214	192	176	164	154	138	114	100	263	237	217	202	190	171	141	122
	42	132	120	110	101	95	85	61	53	161	145	132	124	116	104	85	65	188	169	155	144	135	122	101	87	214	192	176	164	154	138	115	100	263	237	217	202	190	171	141	124
	48	134	120	110	101	84	75	61	53	161	145	134	124	116	104	76	65	188	169	155	145	136	122	101	77	214	192	176	164	154	140	115	100	263	237	217	202	190	171	142	124
	56	134	120	97	90	84	75	61	–	163	146	134	124	116	93	76	65	188	169	157	145	136	122	89	77	214	192	176	166	155	140	115	89	263	237	217	202	190	171	142	110
50.0	18	119	106	97	90	84	75	61	54	145	130	119	110	103	93	76	65	169	152	139	129	121	109	89	77	192	173	159	147	138	124	102	89	237	213	196	182	171	153	126	110
	24	119	106	97	90	84	75	62	54	145	130	119	110	103	93	76	66	169	152	139	129	121	109	89	77	192	173	159	147	138	124	102	89	237	213	196	182	171	153	126	110
	30	119	106	97	90	85	76	62	47	145	130	119	110	103	93	76	66	169	152	139	129	121	109	90	78	192	173	159	147	138	124	102	90	237	213	196	182	171	153	126	110
	36	119	107	98	91	85	76	55	47	145	130	119	110	104	94	76	59	169	152	139	129	121	109	90	78	192	173	159	147	138	124	103	90	237	213	196	182	171	153	126	110
	42	120	107	98	91	85	67	55	47	145	130	120	111	104	94	68	59	169	152	139	129	122	110	90	69	192	173	159	147	138	125	103	90	237	213	196	182	171	153	126	111
	48	120	107	98	80	75	67	55	–	145	131	120	111	104	83	68	59	169	152	141	131	122	110	80	69	192	173	159	147	140	125	103	80	237	213	196	182	171	153	128	111
	56	120	95	87	80	75	67	–	–	146	131	120	99	93	83	68	59	169	153	141	131	122	98	80	69	192	173	160	149	140	125	92	80	237	213	196	182	171	155	128	99
60.0	18	108	97	88	82	77	69	56	49	132	119	109	101	94	85	69	60	155	139	127	118	111	99	82	71	176	159	145	135	126	114	93	81	217	196	179	167	156	141	116	101
	24	108	97	88	82	77	69	57	49	132	119	109	101	94	85	70	60	155	139	127	118	111	99	82	71	176	159	145	135	126	114	93	81	217	196	179	167	156	141	116	101
	30	108	97	89	83	77	69	50	43	132	119	109	101	94	85	70	60	155	139	127	118	111	99	83	71	176	159	145	135	126	114	93	82	217	196	179	167	156	141	116	101
	36	108	98	89	83	77	61	50	43	132	119	109	102	96	85	62	53	155	139	127	118	111	101	83	63	176	159	145	135	126	114	94	82	217	196	179	167	156	141	116	102
	42	110	98	89	73	69	61	50	43	132	120	110	102	96	85	62	53	155	139	127	120	112	101	73	63	176	159	145	135	126	115	94	73	217	196	179	167	156	141	117	102
	48	110	98	79	73	69	61	50	–	134	120	110	102	85	76	62	53	155	141	129	120	112	101	73	63	176	159	145	136	128	115	84	73	217	196	179	167	156	142	117	90
	56	97	87	79	73	69	61	–	–	134	120	98	90	85	76	62	–	157	141	129	120	112	89	73	63	176	160	147	136	128	115	84	73	217	196	179	168	158	142	104	90
70.0	18	100	90	82	76	71	63	52	45	123	110	101	94	87	78	64	55	144	129	118	110	103	92	76	65	164	147	135	125	117	105	87	75	202	182	167	155	145	131	107	94
	24	100	90	82	76	72	64	52	40	123	110	101	94	87	78	65	56	144	129	118	110	103	92	76	66	164	147	135	125	117	105	87	75	202	182	167	155	145	131	107	94
	30	100	90	83	77	72	64	46	40	123	110	101	94	88	79	65	49	144	129	118	110	103	92	76	66	164	147	135	125	117	105	88	76	202	182	167	155	145	131	107	94
	36	101	91	83	77	63	57	46	40	123	110	102	95	88	79	57	49	144	129	118	110	104	93	76	59	164	147	135	125	117	107	88	76	202	182	167	155	145	131	107	95
	42	101	91	73	68	63	57	46	–	124	111	102	95	88	70	57	49	144	129	120	111	104	93	68	59	164	147	135	127	119	107	88	67	202	182	167	155	145	131	109	84
	48	101	80	73	68	63	57	–	–	124	111	102	84	78	70	57	49	145	131	120	111	104	83	68	59	164	147	136	127	119	107	78	67	202	182	167	155	145	132	109	84
	56	90	80	73	68	63	57	–	–	124	99	90	84	78	70	57	–	145	131	120	98	92	83	68	59	166	149	136	127	119	95	78	67	202	182	168	156	147	132	96	84
80.0	18	94	84	77	71	66	59	49	42	115	103	94	87	82	73	60	52	135	121	111	103	96	87	71	61	154	138	126	117	110	99	81	70	190	171	156	145	136	122	101	88
	24	94	84	77	72	67	60	49	38	115	103	94	87	82	73	60	52	135	121	111	103	96	87	71	62	154	138	126	117	110	99	81	71	190	171	156	145	136	122	101	88
	30	94	85	77	72	67	60	43	38	115	103	94	88	83	74	60	46	135	121	111	103	96	87	71	62	154	138	126	117	110	99	82	71	190	171	156	145	136	122	101	89
	36	95	85	77	63	59	53	43	38	115	104	96	88	83	74	53	46	135	121	111	104	97	87	63	55	154	138	126	117	110	100	82	63	190	171	156	145	136	122	102	89
	42	95	85	69	63	59	53	43	–	116	104	96	88	73	65	53	46	135	122	112	104	97	87	63	55	154	138	126	119	111	100	73	63	190	171	156	145	136	124	102	79
	48	84	75	69	63	59	53	–	–	116	104	85	78	73	65	53	–	136	122	112	104	97	77	63	55	154	140	128	119	111	100	73	63	190	171	156	145	138	124	90	79
	56	84	75	69	63	59	–	–	–	116	93	85	78	73	65	–	–	136	122	112	92	87	77	63	–	155	140	128	119	99	89	73	63	190	171	158	147	138	110	90	79
90.0	18	88	79	72	67	63	56	46	40	109	98	89	82	77	69	56	49	127	114	105	97	91	82	67	58	145	130	120	111	104	93	77	66	179	161	148	137	129	116	95	83
	24	88	79	72	68	63	57	41	35	109	98	89	82	77	70	57	49	127	114	105	97	91	82	67	58	145	130	120	111	104	93	77	67	179	161	148	137	129	116	95	83
	30	89	80	73	68	63	50	41	35	109	98	89	83	78	70	50	44	127	114	105	97	91	83	67	52	145	130	120	111	104	93	78	67	179	161	148	137	129	116	95	84
	36	89	80	73	60	56	50	41	–	109	99	90	83	78	62	50	44	127	114	106	98	92	83	60	52	145	130	120	111	105	94	78	59	179	161	148	137	129	116	96	84
	42	89	71	65	60	56	50	–	–	110	99	90	74	69	62	50	44	127	116	106	98	92	73	60	52	145	130	121	112	105	94	69	59	179	161	148	137	129	117	96	74
	48	79	71	65	60	56	50	–	–	110	99	80	74	69	62	50	–	129	116	106	98	82	73	60	52	145	132	121	112	105	84	69	59	179	161	148	139	130	117	85	74
	56	79	71	65	60	–	–	–	–	98	87	80	74	69	62	–	–	129	116	94	87	82	73	60	–	147	132	121	99	93	84	69	59	179	163	149	139	130	104	85	74
100.0	18	84	75	69	63	59	54	44	38	103	93	85	78	73	65	53	47	121	109	99	92	87	77	63	55	138	124	114	105	99	89	73	63	171	153	141	131	122	110	90	79
	24	84	75	69	64	60	54	39	34	103	93	85	78	73	66	54	41	121	109	99	92	87	77	64	55	138	124	114	105	99	89	73	64	171	153	141	131	122	110	90	79
	30	85	76	69	64	60	47	39	34	103	93	85	79	74	66	48	41	121	109	99	92	87	78	64	49	138	124	114	105	99	90	74	64	171	153	141	131	122	110	90	80
	36	85	76	61	57	53	47	39	–	104	94	85	79	74	59	48	41	121	109	101	93	87	78	57	49	138	124	114	107	100	90	74	56	171	153	141	131	122	110	91	71
	42	85	67	61	57	53	47	–	–	104	94	85	70	65	59	48	–	122	110	101	93	87	69	57	49	138	125	115	107	100	90	65	56	171	153	141	131	124	111	81	71
	48	75	67	61	57	53	–	–	–	104	83	76	70	65	59	–	–	122	110	101	83	77	69	57	49	140	125	115	107	100	80	65	56	171	153	142	132	124	111	81	71
	54	75	67	61	57	–	–	–	–	93	83	76	70	65	59	–	–	122	110	89	83	77	69	57	–	140	125	115	95	89	80	65	56	171	155	142	132	124	99	81	71
110.0	18	80	72	65	60	57	51	42	36	99	88	81	75	70	62	52	45	116	104	95	88	83	74	60	53	132	118	108	101	94	85	69	60	163	147	134	125	117	105	86	75
	24	80	72	66	61	57	51	37	32	99	88	81	75	71	63	52	39	116	104	95	88	83	74	61	53	132	118	108	101	94	85	70	61	163	147	134	125	117	105	86	75
	30	81	72	66	61	51	45	37	32	99	89	81	75	71	63	46	39	116	104	95	89	83	75	61	47	132	118	108	101	94	86	70	61	163	147	134	125	117	105	87	76
	36	81	72	58	54	51	45	37	–	100	89	81	75	62	56	46	39	116	105	96	89	83	75	54	47	132	118	108	102	95	86	62	54	163	147	134	125	117	106	87	67
	42	72	64	58	54	51	45	–	–	100	89	72	67	62	56	46	–	117	105	96	89	74	66	54	47	132	120	110	102	95	86	62	54	163	147	134	125	118	106	78	67
	48	72	64	58	54	51	–	–	–	100	79	72	67	62	56	–	–	117	105	96	79	74	66	54	–	133	120	110	102	85	76	62	54	163	147	136	126	118	106	78	67
	51	72	64	58	54	–	–	–	–	88	79	72	67	62	56	–	–	117	105	85	79	74	66	54	–	133	120	110	90	85	76	62	54	163	148	136	126	118	94	78	67
120.0	18	77	69	63	58	54	49	40	31	94	85	77	71	67	60	49	43	111	99	91	84	79	71	58	51	126	114	104	97	90	81	66	58	156	141	129	120	112	101	83	72
	24	77	69	63	59	55	49	35	31	94	85	77	71	68	60	49	38	111	99	91	84	79	71	58	51	126	114	104	97	90	81	67	58	156	141	129	120	112	101	83	72
	30	77	69	63	52	48	43	35	31	94	85	78	72	68	60	44	38	111	99	91	85	80	71	52	45	126	114	104	97	90	82	67	51	156	141	129	120	112	101	84	73
	36	77	61	56	52	48	43	–	–	96	85	78	72	60	53	44	38	111	101	92	85	80	63	52	45	126	114	105	98	91	82	59	51	156	141	129	120	112	102	84	65
	42	69	61	56	52	48	43	–	–	96	85	69	64	60	53	44	–	112	101	92	85	71	63	52	45	126	115	105	98	91	73	59	51	156	141	129	121	113	102	74	65
	48	69	61	56	52	48	–	–	–	85	76	69	64	60	53	–	–	112	101	82	76	71	63	52	–	128	115	105	98	81	73	59	51	156	142	130	121	113	102	74	65
	49	69	61	56	52	–	–	–	–	85	76	69	64	60	53	–	–	112	101	82	76	71	63	52	–	128	115	105	87	81	73	59	51	156	142	130	121	113	90	74	65
130.0	12	74	66	60	56	52	47	38	33	91	81	74	69	64	57	47	41	107	96	88	81	76	68	55	48	122	109	100	93	87	78	64	55	150	135	124	115	108	97	80	69
	18	74	66	60	56	53	47	38	29	91	81	74	69	64	57	47	41	107	96	88	81	76	68	55	49	122	109	100	93	87	78	64	55	150	135	124	115	108	97	80	69
	24	74	67	61	56	53	42	34	29	91	81	74	69	65	58	42	36	107	96	88	81	76	69	56	49	122	109	100	93	87	78	65	56	150	135	124	115	108	97	80	70
	30	74	67	61	50	47	42	34	–	91	82	75	69	65	51	42	36	107	96	89	82	77	69	50	43	122	109	100	93	88	79	65	49	150	135	124	115	108	97	81	70
	36	74	59	54	50	47	42	–	–	92	82	75	61	57	51	42	36	108	97	89	82	77	61	50	43	122	109	101	94	88	79	57	49	150	135	124	115	108	98	72	62
	42	66	59	54	50	47	–	–	–	92	73	66	61	57	51	–	–	108	97	89	73	68	61	50	43	123	110	101	94	88	70	57	49	150	135	125	116	109	98	72	62
	47	66	59	54	50	–	–	–	–	81	73	66	61	57	51	–	–	108	97	78	73	68	61	50	–	123	110	101	83	78	70	57	49	150	137	125	116	109	87	72	62

NOTE: INTERPOLATE FOR HEADER SPANS AND REACTIONS BETWEEN THOSE SHOWN ON THIS SHEET. FOR HEADER REACTION DETERMINATION AND END CONNECTION DETAILS & ANCHORS, SEE SCHEDULE E.

Print Information: P:\FL1\Projects\KK5349.00\Drawings\R1-prg\05-349-11.dwg MCantu 05/10/2006 05:38:13pm 05/10/06 17:38

Thornton-Tomasetti Group
330 N. Andrews Ave., Suite 450 • Ft. Lauderdale, Fl. 33301
Tel. (954) 522-3690 • Fax (954) 522-3691 • COA # 7519
Website: www.TheTTGroup.com

Copyright © 2005 Thornton-Tomasetti Group, Inc.

ROLL-UP SHUTTER

Manufacturers of Hurricane & Security Protection Products
6865 N.W. 36th Avenue
Miami, Florida 33147
Phone: (305) 635-0900
Toll Free: (800) 327-0905
Fax: (305) 634-9078
HURST AWNING COMPANY, INC.
"QUALITY SERVICE SINCE 1957"

V.J. Knezevich
Professional Engineer
FL License No. PE0019963

MAY 08 2006

revisions

no	date	by	description
0	06/30/05	NW	PREVIOUSLY DRAWING NO. 96-380
0	05/10/06	NW	BCCO COMMENTS

date 06/30/2005
scale AS NOTED
drawn by MCR
design by VJK
checked by VJK
drawing no. 05-349
sheet 11 of 12

PRODUCT REVISED
as complying with the Florida
Building Code
Acceptance No. 05-0718.02
Expiration Date 04/25/11
By
Miami-Dade Product Control
Division

HEADER LENGTH OR SHUTTER WIDTH SCHEDULE (K)

HEADER TYPE AND MAXIMUM LENGTH (INCHES)

POSITIVE OR NEGATIVE DESIGN LOAD (P.S.F.)	MAXIMUM SLAT SPAN USED (IN.)	(5) 2" x 3" STORM BAR HEIGHT (IN.)								(5) 2" x 3" STORM BAR HEIGHT (IN.)								(5) 2" x 3" STORM BAR HEIGHT (IN.)								(5) 2" x 3" STORM BAR HEIGHT (IN.)								(5) 2" x 3" STORM BAR HEIGHT (IN.)							
		48	60	72	84	96	120	180	240	48	60	72	84	96	120	180	240	48	60	72	84	96	120	180	240	48	60	72	84	96	120	180	240	48	60	72	84	96	120	180	240
140.0	12	71	63	58	54	50	45	37	32	87	78	71	66	62	55	45	39	103	92	84	78	73	65	53	46	117	105	97	90	84	75	62	53	145	131	120	111	104	94	77	67
	18	71	63	58	54	51	45	37	28	87	78	71	66	62	55	46	40	103	92	84	78	73	65	54	47	117	105	97	90	84	75	62	54	145	131	120	111	104	94	77	67
	24	72	64	59	54	51	40	33	28	87	78	71	67	63	56	40	35	103	92	84	78	73	66	54	41	117	105	97	90	84	75	62	54	145	131	120	111	104	94	77	68
	30	72	64	52	48	45	40	33	–	88	79	72	67	63	49	40	35	103	92	85	79	74	66	48	41	117	105	97	91	85	76	62	48	145	131	120	111	104	94	78	60
	36	63	57	52	48	45	40	–	–	88	79	72	59	55	49	40	–	104	93	85	79	74	59	48	41	117	107	98	91	85	76	55	48	145	131	120	111	105	95	69	60
	42	63	57	52	48	45	–	–	–	88	70	64	59	55	49	–	–	104	93	85	70	65	59	48	–	119	107	98	91	85	67	55	48	145	131	121	112	105	84	69	60
	45	63	57	52	48	–	–	–	–	78	70	64	59	55	49	–	–	104	93	76	70	65	59	48	–	119	107	98	80	75	67	55	48	145	132	121	112	105	84	69	60
150.0	12	69	61	56	52	48	43	36	31	85	76	69	64	60	53	44	38	99	89	82	76	71	63	52	45	114	102	93	87	81	73	59	51	141	126	116	107	101	90	74	65
	18	69	61	56	52	49	44	32	27	85	76	69	64	60	53	44	38	99	89	82	76	71	63	52	45	114	102	93	87	81	73	59	52	141	126	116	107	101	90	74	65
	28	69	62	57	46	43	39	32	–	85	76	70	65	60	48	39	34	99	89	83	76	71	64	46	40	114	102	93	87	82	74	60	46	141	126	116	107	101	90	75	65
	32	69	55	50	46	43	39	–	–	85	76	70	65	53	48	39	34	99	90	83	76	71	57	46	40	114	102	94	88	82	74	53	46	141	126	116	107	101	91	75	58
	36	61	55	50	46	43	39	–	–	85	76	62	57	53	48	39	–	101	90	83	76	63	57	46	40	114	103	94	88	82	74	53	46	141	126	116	109	102	91	67	58
	40	61	55	50	46	43	–	–	–	85	68	62	57	53	48	–	–	101	90	83	68	63	57	46	–	115	103	94	88	82	65	53	46	141	126	117	109	102	91	67	58
	44	61	55	50	46	–	–	–	–	76	68	62	57	53	48	–	–	101	90	73	68	63	57	46	–	115	103	94	78	73	65	53	46	141	128	117	109	102	81	67	58
160.0	12	66	59	54	50	47	42	35	30	82	73	67	62	58	52	42	37	96	87	79	73	68	61	50	43	110	99	90	84	79	70	58	50	136	122	112	104	98	88	72	63
	12	66	59	54	50	47	42	35	30	82	73	67	62	58	52	42	37	96	87	79	73	68	61	50	43	110	99	90	84	79	70	58	50	136	122	112	104	98	88	72	63
	18	66	59	54	51	47	42	31	27	82	73	67	62	58	52	43	37	96	87	79	73	68	61	51	44	110	99	90	84	79	70	58	50	136	122	112	104	98	88	72	63
	24	67	60	55	51	42	38	31	27	82	73	68	63	59	52	38	33	96	87	79	73	69	62	51	39	110	99	90	84	79	71	58	50	136	122	112	104	98	88	72	63
	30	67	60	48	45	42	38	31	–	83	74	68	63	52	46	38	33	96	87	80	74	69	62	45	39	110	99	90	85	80	71	51	45	136	122	112	104	98	89	73	56
	36	59	53	48	45	42	38	–	–	83	74	60	55	52	46	38	–	97	87	80	74	61	55	45	39	110	100	91	85	80	63	51	45	136	122	112	105	99	89	65	56
	42	59	53	48	45	–	–	–	–	73	65	60	55	52	46	–	–	97	87	71	65	61	55	45	–	111	100	91	75	70	63	51	45	136	124	113	105	99	79	65	56
170.0	12	64	58	53	49	46	41	34	29	79	71	65	60	56	50	41	36	94	84	77	71	66	59	48	42	107	96	88	82	76	68	56	48	132	119	109	101	95	85	70	61
	12	64	58	53	49	46	41	34	29	79	71	65	60	56	50	41	36	94	84	77	71	66	59	48	42	107	96	88	82	76	68	56	48	132	119	109	101	95	85	70	61
	18	64	58	53	49	46	41	30	26	79	71	65	60	56	51	41	32	94	84	77	71	66	59	49	42	107	96	88	82	76	68	56	49	132	119	109	101	95	85	70	61
	24	65	58	53	49	41	36	30	26	79	72	66	61	57	51	37	32	94	84	77	72	67	60	49	38	107	96	88	82	76	69	56	49	132	119	109	101	95	85	71	61
	30	65	51	47	44	41	36	–	–	80	72	66	61	50	45	37	32	94	85	78	72	67	60	43	38	107	96	89	82	77	69	50	43	132	119	109	101	95	86	71	54
	36	58	51	47	44	41	36	–	–	80	64	58	54	50	45	37	–	95	85	78	63	59	53	43	38	108	97	89	82	77	61	50	43	132	119	109	102	96	86	63	54
	41	58	51	47	44	–	–	–	–	71	64	58	54	50	45	–	–	95	85	69	63	59	53	43	–	108	97	89	73	68	61	50	43	132	120	110	102	96	76	63	54
180.0	12	63	56	51	47	44	40	33	28	77	69	63	58	55	49	40	35	91	82	75	69	65	58	47	41	104	93	85	79	74	66	54	47	129	116	106	98	92	83	68	59
	12	63	56	51	47	44	40	33	28	77	69	63	58	55	49	40	35	91	82	75	69	65	58	47	41	104	93	85	79	74	66	54	47	129	116	106	98	92	83	68	59
	18	63	56	52	48	45	40	29	25	77	69	63	58	55	49	40	31	91	82	75	69	65	58	48	41	104	93	85	79	74	66	54	48	129	116	106	98	92	83	68	59
	24	63	57	52	42	40	35	29	25	77	70	64	59	55	49	36	31	91	82	75	70	65	58	42	37	104	93	85	79	74	67	55	42	129	116	106	98	92	83	69	60
	30	63	50	46	42	40	35	–	–	78	70	64	52	49	44	36	31	91	83	75	70	65	52	42	37	104	93	86	80	75	67	49	42	129	116	106	98	92	84	69	53
	36	56	50	46	42	40	–	–	–	78	62	56	52	49	44	–	–	92	83	75	62	58	52	42	37	105	94	86	80	75	59	49	42	129	116	107	99	93	84	61	53
	40	56	50	46	42	–	–	–	–	69	62	56	52	49	44	–	–	92	83	67	62	58	52	42	–	105	94	86	71	66	59	49	42	129	117	107	99	93	74	61	53
190.0	12	61	54	50	46	43	39	32	28	75	67	61	57	53	47	39	34	89	79	73	67	63	56	46	40	101	91	83	77	72	65	53	46	125	113	103	96	90	81	66	58
	12	61	54	50	46	43	39	32	28	75	67	61	57	53	47	39	34	89	79	73	67	63	56	46	40	101	91	83	77	72	65	53	46	125	113	103	96	90	81	66	58
	18	61	54	50	47	44	39	28	24	75	67	61	57	54	48	39	30	89	79	73	67	63	56	46	40	101	91	83	77	72	65	53	46	125	113	103	96	90	81	66	58
	24	62	55	50	41	39	34	28	24	75	68	62	57	54	48	35	30	89	79	73	68	64	57	41	36	101	91	83	77	72	65	53	41	125	113	103	96	90	81	67	58
	30	62	49	44	41	39	34	–	–	76	68	62	51	47	42	35	30	90	80	73	68	64	50	41	36	101	91	84	78	73	65	47	41	125	113	103	96	91	82	59	51
	36	54	49	44	41	39	–	–	–	76	60	55	51	47	42	–	–	90	80	73	60	56	50	41	–	102	92	84	78	73	58	47	41	125	113	104	97	91	82	59	51
	39	54	49	44	41	–	–	–	–	67	60	55	51	47	42	–	–	90	80	65	60	56	50	41	–	102	92	84	69	65	58	47	41	125	114	104	97	91	72	59	51
200.0	12	59	53	48	45	42	38	31	27	73	65	60	55	52	46	38	33	87	77	71	65	61	55	45	39	99	89	81	75	70	63	51	45	122	110	101	94	88	79	65	56
	12	59	53	48	45	42	38	31	27	73	65	60	55	52	46	38	33	87	77	71	65	61	55	45	39	99	89	81	75	70	63	51	45	122	110	101	94	88	79	65	56
	18	59	54	49	45	42	38	27	24	73	65	60	55	52	47	38	29	87	77	71	65	61	55	45	39	99	89	81	75	70	63	52	45	122	110	101	94	88	79	65	56
	24	60	54	49	40	38	34	27	–	73	66	60	56	52	41	34	29	87	77	71	66	62	55	40	35	99	89	81	75	71	64	52	40	122	110	101	94	88	79	65	57
	30	60	47	43	40	38	34	–	–	74	66	60	49	46	41	34	–	87	78	71	66	62	49	40	35	99	90	82	76	71	64	46	40	122	110	101	94	89	80	58	50
	36	53	47	43	40	38	–	–	–	74	59	53	49	46	41	–	–	87	78	63	59	55	49	40	–	100	90	82	76	63	56	46	40	122	110	102	95	89	71	58	50
	38	53	47	43	40	–	–	–	–	65	59	53	49	46	41	–	–	87	78	63	59	55	49	40	–	100	90	82	67	63	56	46	40	122	111	102	95	89	71	58	50
210.0	12	58	52	47	44	41	37	30	26	71	64	58	54	51	45	37	32	84	76	69	64	60	53	44	38	97	87	79	74	69	62	50	43	120	107	98	91	86	77	63	55
	12	58	52	47	44	41	37	30	26	71	64	58	54	51	45	37	32	84	76	69	64	60	53	44	38	97	87	79	74	69	62	50	43	120	107	98	91	86	77	63	55
	18	58	52	48	44	41	37	27	23	71	64	58	54	51	46	37	29	84	76	69	64	60	54	44	38	97	87	79	74	69	62	51	44	120	107	98	91	86	77	64	55
	24	59	52	42	39	37	33	27	–	71	65	59	55	51	40	33	29	84	76	70	65	60	54	39	34	97	87	79	74	70	62	51	39	120	107	98	91	87	78	56	49
	30	52	46	42	39	37	33	–	–	72	65	52	48	45	40	33	–	85	76	70	65	60	48	39	34	97	88	80	74	70	62	45	39	120	109	99	92	87	78	56	49
	36	52	46	42	39	37	–	–	–	72	57	52	48	45	40	–	–	85	76	62	57	53	48	39	–	98	88	80	74	62	55	45	39	120	109	99	92	87	69	56	49
	37	52	46	42	39	–	–	–	–	64	57	52	48	45	40	–	–	85	76	62	57	53	48	39	–	98	88	80	66	62	55	45	39	120	109	99	92	87	69	56	49
220.0	12	57	51	46	43	40	36	30	26	70	62	57	53	49	44	36	32	83	74	67	62	58	52	43	37	94	85	78	72	67	60	49	42	117	105	96	89	84	75	62	53
	12	57	51	46	43	40	36	30	26	70	62	57	53	49	44	36	32	83	74	67	62	58	52	43	37	94	85	78	72	67	60	49	42	117	105	96	89	84	75	62	53
	12	57	51	46	43	40	36	30	26	70	62	57	53	49	44	36	32	83	74	67	62	58	52	43	37	94	85	78	72	67	60	49	42	117	105	96	89	84	75	62	53
	18	57	51	47	43	40	36	26	23	70	62	57	53	50	45	36	28	83	74	67	62	58	53	43	37	94	85	78	72	67	60	50	43	117	105	96	89	84	75	62	54
	24	57	51	41	38	36	32	26	–	71	63	58	53	50	39	32	28	83	74	68	63	59	53	38	33	94	85	78	73	68	61	50	38	117	105	96	89	84	75	62	48
	30	51	45	41	38	36	32	–	–	71	63	51	47	44	39	32	–	83	75	68	63	52	47	38	33	94	86	78	73	68	61	44	38	117	105	96	89	85	76	55	48
	36	51	45	41	38	–	–	–	–	62	56	51	47	44	39	–	–	83	75	60	56	52	47	38	–	95	86	78	64	60	54	44	38	117	106	97	90	85	67	55	48
230.0	12	55	49	45	42	39	35	29	25	68	61	56	52	48	43	36	31	81	72	66	61	57	51	42	36	92	83	76	70	66	59	48	42	114	103	94	87	82	74	60	52
	12	55	49	45	42	39	35	29	25	68	61	56	52	48	43	36	31	81	72	66	61	57	51	42	36	92	83	76	70	66	59	48	42	114	103	94	87	82	74	60	52
	12	55	49	45	42	39	35	29	25	68	61	56	52	48	43	36	31	81	72	66	61	57	51	42	36	92	83	76	70	66	59	48	42	114	103	94	87	82	74	60	52
	18	55	50	46	42	40	31	26	22	68	61	56	52	49	44	32	27	81	72	66	61	57	52	42	37	92	83	76	70	66	59	49	42	114	103	94	87	82	74	60	53
	24	56	50	40	37	35	31	26	–	69	62	56	52	49	39	32	27	81	72	67	62	58	52	37	32	92	83	76	71	66	59	49	37	114	103	94	87	82	74	61	47
	30	49	44	40	37	35	31	–	–	69	62	50	46	43	39	32	–	82	73	67	62	51	46	37	32	92	84	77	71	66	53	43	37	114	103	94	88	83	74	54	47
	35	49	44	40	37	–	–	–	–	61	55	50	46	43	39	–	–	82	73	59	55	51	46	37	–	93	84	77	63	59	53	43	37	114	104	95	88	83	66	54	47

NOTE: INTERPOLATE FOR HEADER SPANS AND REACTIONS BETWEEN THOSE SHOWN ON THIS SHEET. FOR HEADER REACTION DETERMINATION AND END CONNECTION DETAILS & ANCHORS, SEE SCHEDULE E.

Print Information: P:\FL1\Projects\KK5349.00\Drawings\R1-prg\05-349-12.dwg MCantu 05/10/2006 05:36:50pm 05/10/06 17:36

Thornton•Tomasetti Group
330 N. Andrews Ave., Suite 450 • Ft. Lauderdale, FL 33301
Tel. (954) 522-3690 • Fax (954) 522-3691 • COA # 7519
Website: www.TheTTGroup.com

Copyright © 2005 Thornton-Tomasetti Group, Inc.

ROLL-UP SHUTTER

Manufacturers of Hurricane & Security Protection Products
HURST AWNING COMPANY, INC.
"QUALITY SERVICE SINCE 1957"
6865 N.W. 36th Avenue
Miami, Florida 33147
Phone: (305) 635-0900
Toll Free: (800) 327-0905
Fax: (305) 634-9078

V.J. Knezevich
Professional Engineer
FL License No.: PE 0019983

MAY 08 2006

revisions

no	date	by	description
0	06/30/05	NW	PREVIOUSLY DRAWING NO. 96-380
0	05/10/06	NW	BCCO COMMENTS

date 06/30/2005
scale AS NOTED
drawn by MCR
design by VJK
checked by VJK
drawing no. 05-349
sheet 12 of 12