MIAMI-DADE COUNTY
BUILDING CODE COMPLIANCE OFFICE (BCCO)
PRODUCT CONTROL DIVISION

MIAMI-DADE COUNTY, FLORIDA
METRO-DADE FLAGLER BUILDING

140 WEST FLAGLER STREET, SUITE 1603
MIAMI, FLORIDA 33130-1563
(305) 375-2901 FAX (305) 375-2908
www.miamidade.gov

NOTICE OF ACCEPTANCE (NOA)

Hurst Awning Co., Inc.
6865 N.W. 36th Avenue
Miami, FL 33147

SCOPE:

This NOA is being issued under the applicable rules and regulations governing the use of construction materials. The documentation submitted has been reviewed by Miami-Dade County Product Control Division and accepted by the Board of Rules and Appeals (BORA) to be used in Miami Dade County and other areas where allowed by the Authority Having Jurisdiction (AHJ).

This NOA shall not be valid after the expiration date stated below. The Miami-Dade County Product Control Division (In Miami Dade County) and/or the AHJ (in areas other than Miami Dade County) reserve the right to have this product or material tested for quality assurance purposes. If this product or material fails to perform in the accepted manner, the manufacturer will incur the expense of such testing and the AHJ may immediately revoke, modify, or suspend the use of such product or material within their jurisdiction. BORA reserves the right to revoke this acceptance, if it is determined by Miami-Dade County Product Control Division that this product or material fails to meet the requirements of the applicable building code.

This product is approved as described herein, and has been designed to comply with the High Velocity Hurricane Zone of the Florida Building Code.

DESCRIPTION: "Super-Fold" Aluminum Accordion Shutter

APPROVAL DOCUMENT: Drawing No. 05-347, titled "Super-Fold Accordion Shutter", sheets 1 through 5 of 5, prepared by Thornton-Tomasetti Group, dated June 30, 2005, last revision #2 dated July 12, 2006, signed and sealed by V. J. Knezevich, P.E., bearing the Miami-Dade County Product Control Revision stamp with the Notice of Acceptance number and expiration date by the Miami-Dade County Product Control Division.

MISSILE IMPACT RATING: Large and Small Missile Impact

LABELING: Each unit shall bear a permanent label with the manufacturer's name or logo, city, state and the following statement: "Miami-Dade County Product Control Approved", unless otherwise noted herein.

RENEWAL of this NOA shall be considered after a renewal application has been filed and there has been no change in the applicable building code negatively affecting the performance of this product.

TERMINATION of this NOA will occur after the expiration date or if there has been a revision or change in the materials, use, and/or manufacture of the product or process. Misuse of this NOA as an endorsement of any product, for sales, advertising or any other purposes shall automatically terminate this NOA. Failure to comply with any section of this NOA shall be cause for termination and removal of NOA.

ADVERTISEMENT: The NOA number preceded by the words Miami-Dade County, Florida, and followed by the expiration date may be displayed in advertising literature. If any portion of the NOA is displayed, then it shall be done in its entirety.

INSPECTION: A copy of this entire NOA shall be provided to the user by the manufacturer or its distributors and shall be available for inspection at the job site at the request of the Building Official.

This NOA **revises NOA # 02-0624.06** and consists of this page 1, evidence submitted pages E-1, E-2, & E-3 as well as approval document mentioned above.

The submitted documentation was reviewed by **Helmy A. Makar, P.E.**

Helmy A. Makar
08/31/2006

PRODUCT CONTROL ACCEPTED

NOA No 05-0718.03
Expiration Date: 09/05/2007
Approval Date: 08/31/2006

Hurst Awning Co., Inc.

NOTICE OF ACCEPTANCE: EVIDENCE SUBMITTED

1. EVIDENCE SUBMITTED UNDER PREVIOUS APPROVAL No. 96-0701.04

A. DRAWINGS

1. *Drawing No. 96-218 "Super-Fold Accordion Shutter", Sheets 1, 2, 3 and 4 of 4, prepared by Knezevich and Associates, Inc., dated 11/23/94, Rev. 1 - 1/25/95, signed and sealed by V.J. Knezevich, P.E.*

B. TESTS

1. *Test report on: 1.) Uniform Static Air Pressure Test Loading, per PA 202-94*
   2.) Large Missile Impact Test, per PA 201-94, and
   3.) Cyclic Loading Wind Pressure Test. per PA 203-94
   of extruded aluminum accordion shutter (132" span), prepared by Construction Research Laboratory, Inc., Report No. S1025A, dated November 30, 1994, signed and sealed by Vipin Tolat, P.E.
2. *Test report on Uniform Static Air Pressure Test Loading, per PA 202-94, of extruded aluminum accordion shutter (45" span), prepared by "Hurricane Engineering & Testing Inc.", Report No. HETI 94-368, dated November 10, 1994, signed and sealed by Hector M. Medina, P.E.*
3. *Test report on Uniform Static Air Pressure Test Loading, per PA 202-94, of extruded aluminum accordion shutter (134 1/2" span), prepared by "Hurricane Engineering & Testing Inc.", Report No. HETI 94-363, dated November 3, 1994, signed and sealed by Hector M. Medina, P.E.*
4. *Test report on Uniform Static Air Pressure Test Loading, per PA 202-94, of extruded aluminum accordion shutter (89 1/2" span), prepared by "Hurricane Engineering & Testing Inc.", Report No. HETI 94-365, dated November 5, 1994, signed and sealed by Hector M. Medina, P.E.*

C. CALCULATIONS

1. *Comparative and Anchor analysis dated 12/13/94, Pages 1 through 20 of 20, prepared by Knezevich and Associates, signed and sealed by V.J. Knezevich, P.E.*

D. MATERIAL CERTIFICATIONS

1. *Mill Certified Test Report issued by Indalex, dated 12/13/94 with chemical composition and mechanical properties for aluminum alloy 6063-T6.*
2. *Tensile Test Report No. 70-02-131174, prepared by Atec Associates, Inc., dated 09/27/94, tested as per ASTM E8-93.*

Helmy A. Makar

Helmy A. Makar, P.E.
Product Control Examiner
NOA No 05-0718.03
Expiration Date: 09/05/2007
Approval Date: 08/31/2006

NOTICE OF ACCEPTANCE: EVIDENCE SUBMITTED

2. EVIDENCE SUBMITTED UNDER PREVIOUS APPROVAL No. 99-0421.08

A. DRAWINGS

1. None.

B. TESTS

1. None.

C. CALCULATIONS

1. None.

D. MATERIAL CERTIFICATIONS

1. None.

E. STATEMENTS

1. Letter from Hurst Awning Company, Inc., dated June 7, 1999, certifying that this product has no changes in any form from it present approval No. 96-0701.04.

3. EVIDENCE SUBMITTED UNDER PREVIOUS APPROVAL No. 02-0315.12

A. DRAWINGS

See NOA 02-0315.12 (General Notes)

B. TESTS

See NOA 99-0421.08

C. CALCULATIONS

See NOA 99-0421.08

D. MATERIAL CERTIFICATIONS

See NOA 99-0421.08

E. STATEMENTS

See NOA 99-0421.08

F. OTHER

See NOA 99-0421.08

Helmy A. Makar, P.E.
Product Control Examiner
NOA No 05-0718.03
Expiration Date: 09/05/2007
Approval Date: 08/31/2006

NOTICE OF ACCEPTANCE: EVIDENCE SUBMITTED

4. EVIDENCE SUBMITTED UNDER PREVIOUS APPROVAL #02-0624.06

A. DRAWINGS

1. *Drawing No. 96-218, titled "Super-Fold Accordion Shutter", sheets 1 through 4 of 4, prepared by Knezevich & Associates, Inc., dated June 25, 1996, last revision #2 dated May 13, 2002, signed and sealed by V.J. Knezevich, P.E.*

B. TESTS

1. *None.*

C. CALCULATIONS

1. *None.*

D. MATERIAL CERTIFICATIONS

1. *None.*

E. STATEMENTS

1. *Letter from Hurst Awning Company, Inc., dated June 21, 2002, certifying that this product has no changes in any form from it present approval No. 02-0315.12 and that Knezevich & Associates, Inc. is still in the engineering business.*

5. NEW EVIDENCE SUBMITTED

A. DRAWINGS

1. *Drawing No. 05-347, titled "Super-Fold Accordion Shutter", sheets 1 through 5 of 5, prepared by Thornton-Tomasetti Group, dated June 30, 2005, last revision #2 dated July 12, 2006, signed and sealed by V. J. Knezevich, P.E.*

B. TESTS

1. *None.*

C. CALCULATIONS

1. *Revised anchor calculations, dated June 21, 2005, pages 1 through 21, prepared by Thornton-Tomasetti Group, signed and sealed by V.J. Knezevich, P.E. on June 21, 2005.*

D. QUALITY ASSURANCE

1. *By Miami-Dade County Building Code Compliance Office.*

E. MATERIAL CERTIFICATIONS

1. *None.*

Helmy A. Makar, P.E.
Product Control Examiner
NOA No 05-0718.03
Expiration Date: 09/05/2007
Approval Date: 08/31/2006

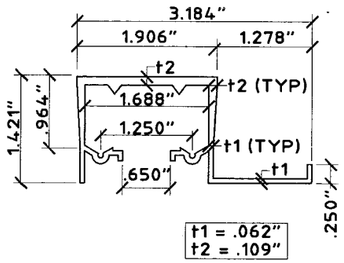

① **HEADER-CLG. MOUNTED**
SCALE: HALF SIZE

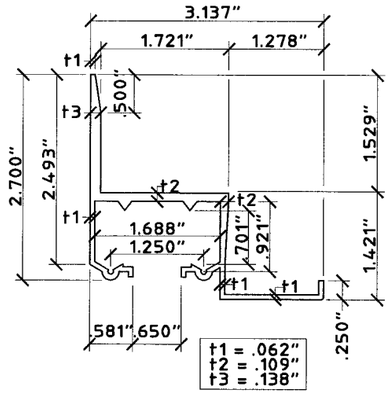

② **HEADER-WALL MOUNTED**
SCALE: HALF SIZE

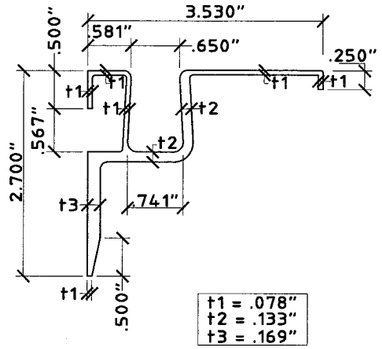

③ **SILL-WALL MOUNTED**
SCALE: HALF SIZE

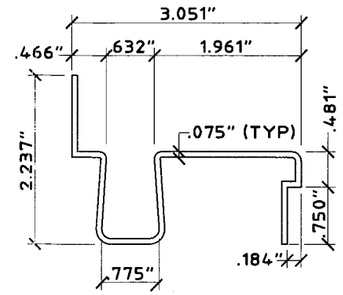

④ **ADJ. SILL-TOP**
SCALE: HALF SIZE

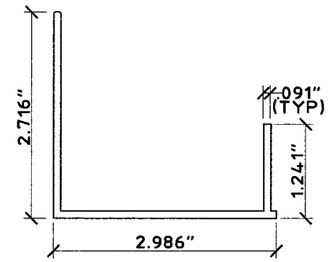

⑤ **ADJ. SILL-BOT.**
SCALE: HALF SIZE

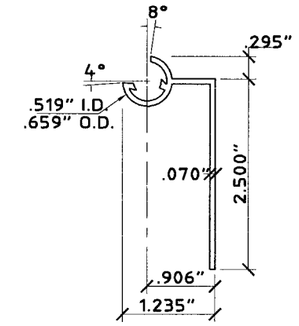

⑥ **90° END SLAT**
SCALE: HALF SIZE

GENERAL NOTES:

1. THESE APPROVAL DOCUMENTS REPRESENT A SHUTTER SYSTEM ANALYZED WITH THE PROVISION SET FOR THE ISSUANCE OF A NOTICE OF ACCEPTANCE (NOA) BY MIAMI-DADE COUNTY PRODUCT CONTROL DIVISION FOR THE HIGH VELOCITY HURRICANE ZONE (HVHZ) OF THE FLORIDA BUILDING CODE 2004, WITH 2005 SUPPLEMENT.
2. NO INCREASE IN ALLOWABLE STRESS HAS BEEN USED IN THE DESIGN OF THIS PRODUCT. WIND LOAD DURATION FACTOR Cd = 1.6 WAS USED FOR WOOD LAG SCREW DESIGN.
3. DETERMINE THE POSITIVE AND NEGATIVE DESIGN LOADS TO USE WHEN REFERENCING THESE DOCUMENTS IN ACCORDANCE WITH THE GOVERNING CODE AND GOVERNING WIND VELOCITY. FOR WIND LOAD CALCULATIONS IN ACCORDANCE WITH ASCE 7-02, A DIRECTIONALITY FACTOR OF Kd =0.85 SHALL BE USED.
4. THESE APPROVAL DOCUMENTS ARE GENERIC AND DO NOT INCLUDE INFORMATION FOR SITE-SPECIFIC APPLICATION OF THIS SHUTTER SYSTEM.
5. USE OF THESE APPROVAL DOCUMENTS SHALL COMPLY WITH CHAPTER 61G15-23 OF THE FLORIDA ADMINISTRATIVE CODE.
6. THESE APPROVAL DOCUMENTS, ARE SUITABLE TO BE APPLIED BY THE CONTRACTOR PROVIDED THE CONTRACTOR DOES NOT DEVIATE FROM THE CONDITIONS DETAILED HEREIN AND THE CONTRACTOR VERIFIES THAT THE EXISTING STRUCTURE DOES NOT DEVIATE IN EITHER FORM OR MATERIAL FROM THE STRUCTURAL SUBSTRATES DETAILED HEREIN.
7. ANY MODIFICATIONS OR ADDITIONS TO THESE APPROVAL DOCUMENTS WILL VOID THE APPROVAL DOCUMENTS.
8. WHEN THE SITE CONDITIONS DEVIATE FROM THESE APPROVAL DOCUMENTS, THE BUILDING OFFICIAL MAY ELECT ONE OF THE FOLLOWING OPTIONS:
   A) REQUIRE THAT SITE SPECIFIC DOCUMENTS BE PREPARED, SIGNED, DATED AND SEALED BY A LICENSED ENGINEER OR REGISTERED ARCHITECT, WHICH DETAIL AND JUSTIFY THE DEVIATION. SAID DOCUMENTS SHALL BE SUBMITTED TO THE PRODUCT ENGINEER FOR REVIEW AS A CONDITION TO THE BUILDING OFFICIAL GRANTING HIS/HER APPROVAL.
   B) REQUIRE THAT A ONE-TIME SITE SPECIFIC APPROVAL BE APPLIED FOR AND SECURED FROM THE MIAMI-DADE COUNTY PRODUCT CONTROL DIVISION

   WHEN THE SITE CONDITION DEVIATIONS OCCUR WITHIN THE HIGH VELOCITY HURRICANE ZONE AREAS ONLY OPTION "B" SHALL BE ACCEPTED BY THE BUILDING OFFICIAL.
9. EACH SHUTTER ASSEMBLY SHALL BE PERMANETLY LABELED AT THE BOTTOM END OF THE LOCKING SLAT AS FOLLOWS:

   HURST AWNING CO., INC.
   MIAMI, FLORIDA
   MIAMI-DADE COUNTY PRODUCT CONTROL APPROVED
10. ALL EXTRUSIONS SHALL BE 6063-T6 ALUMINUM ALLOY, U.O.N
11. ALL BOLTS AND WASHERS SHALL BE GALVANIZED OR STAINLESS STEEL WITH A MINIMUM TENSILE STRENGTH OF 33 K.S.I., U.O.N. POP RIVETS SHALL BE 3/16" DIA. 5052 ALUMINUM ALLOY.
12. ALL SHUTTERS SHALL HAVE A LOCKING MECHANISM AT CENTER OR SIDE CLOSURE.
13. THE MAXIMUM SHUTTER BLADE LENGTH TESTED WAS 134-1/2".
14. CLOSURE STRIP FOR BUILD-OUT MOUNT SHALL BE AN ANGLE OF SUFFICIENT SIZE TO FULLY COVER BOTH OPEN SIDES OF STORM SHUTTER INSTALLATION. CLOSURE STRIP SHALL BE ATTACHED TO WALL WITH 1/4Ø FASTENER @ 24" O.C. (TYPE TO BE DETERMINED FROM ANCHOR SCHEDULE). PANEL NEED NOT BE ATTACHED TO CLOSURE STRIP.

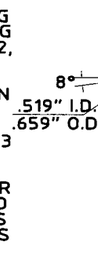

⑦ **FLAT END SLAT**
SCALE: HALF SIZE

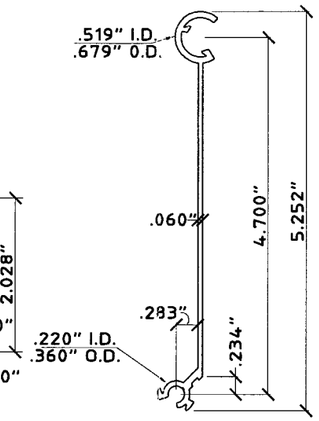

⑧ **TYP. SLAT**
SCALE: HALF SIZE

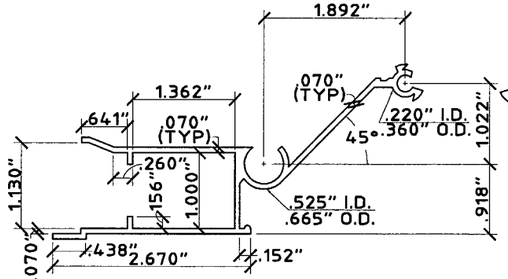

⑨ **FEMALE LOCK-SLAT**
SCALE: HALF SIZE

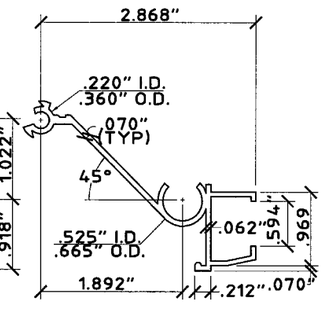

⑩ **MALE LOCK SLAT**
SCALE: HALF SIZE

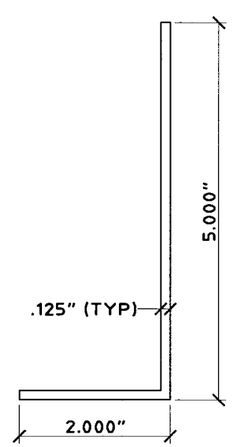

⑪ **ANGLE**
SCALE: HALF SIZE

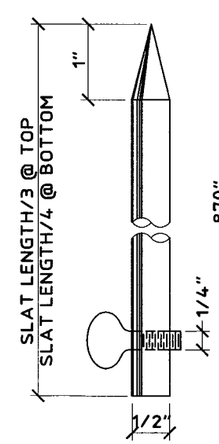

⑫ **LOCKING PIN**
SCALE: HALF SIZE

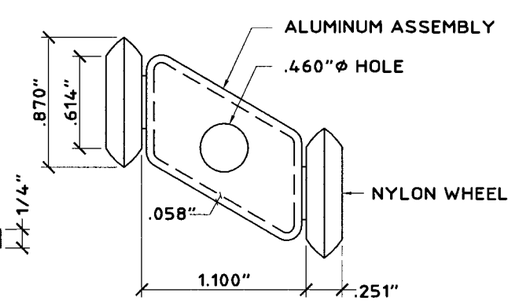

⑬ **ROLLER ASSEMBLY**
SCALE: FULL SIZE

PRODUCT REVISED
as complying with the Florida
Building Code
Acceptance No. 05-0718.03
Expiration Date 09/05/2007
By Helmy A. Mehr
Miami Dade Product Control
Division

Thornton-Tomasetti Group
330 N. Andrews Ave., Suite 450 • Ft. Lauderdale, FL 33301
Tel. (954) 522-3690 • Fax (954) 522-3691 • COA # 7519
Website: www.TheTTGroup.com

Copyright © 2006 Thornton-Tomasetti Group, Inc.

SUPER-FOLD ACCORDION SHUTTER

Manufacturers of Hurricane & Security Protection Products
6865 N.W. 36th Avenue
Miami, Florida 33147
Phone: (305) 635-0900
Toll Free: (800) 327-0905
Fax: (305) 634-9078
HURST AWNING COMPANY, INC.
"QUALITY SERVICE SINCE 1957"

V.J. Knezevich
Professional Engineer
FL License No.: PE 0010083

JUL 13 2006

revisions

no	date	by	description
0	06/30/2005	VJK	PREVIOUSLY DRAWING NO. 56-218
1	03/03/2006	VJK	COUNTY COMMENTS (NAILIN IN BLOCK)
2	07/12/2006	VJK	COUNTY COMMENTS

date	06/30/2005
scale AS NOTED	drawn by MCR
design by VJK	checked by VJK
drawing no. 05-347	
sheet 1 of 5	

Print Information: P:\FL1\Projects\KK5347.00\Drawings\R2-sub\05-347-01.dwg MCantu 07/14/2006 09:59:20am 07/13/06 10:03

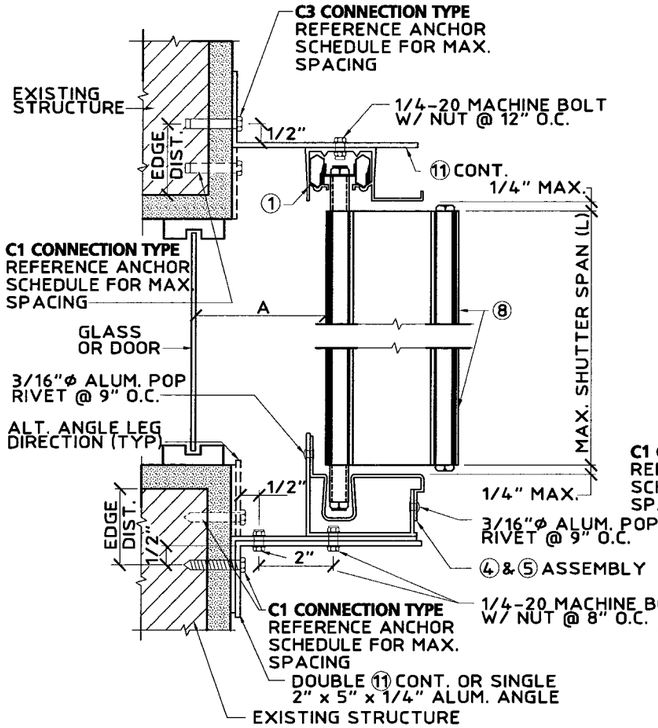

Ⓒ **BUILD-OUT MOUNT SECTION**

SCALE : 3"= 1'- 0"

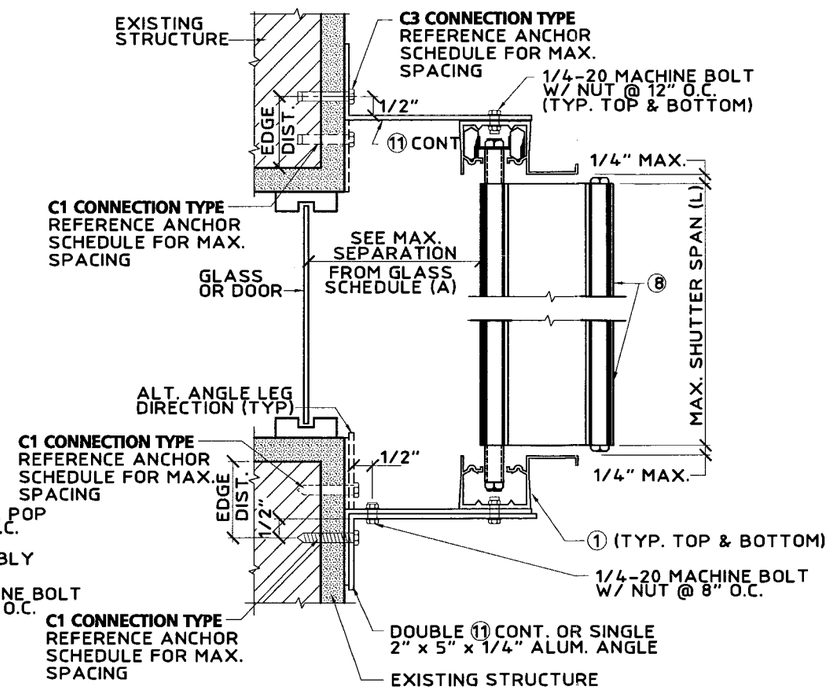

Ⓓ **BUILD-OUT MOUNT SECTION**

SCALE : 3"= 1'- 0"

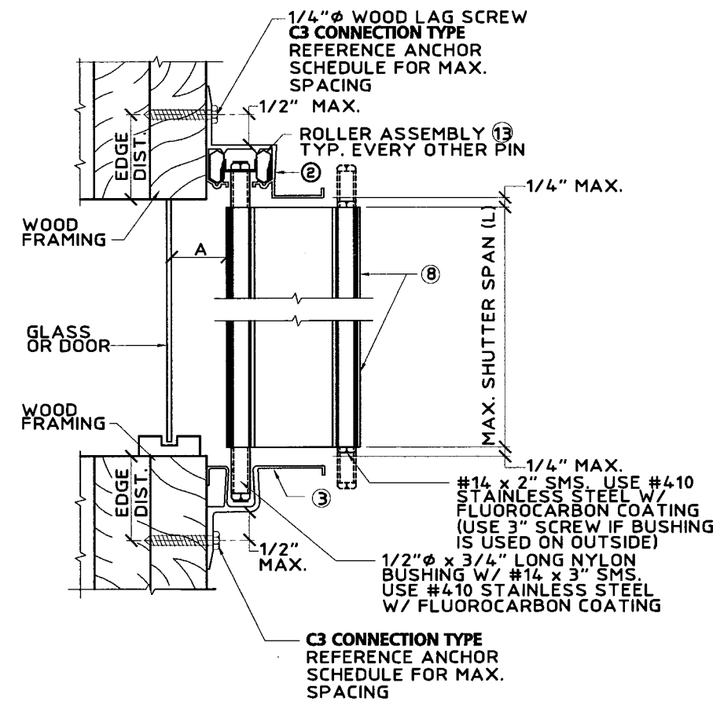

Ⓔ **WALL MOUNT SECTION**

SCALE : 3"= 1'- 0"

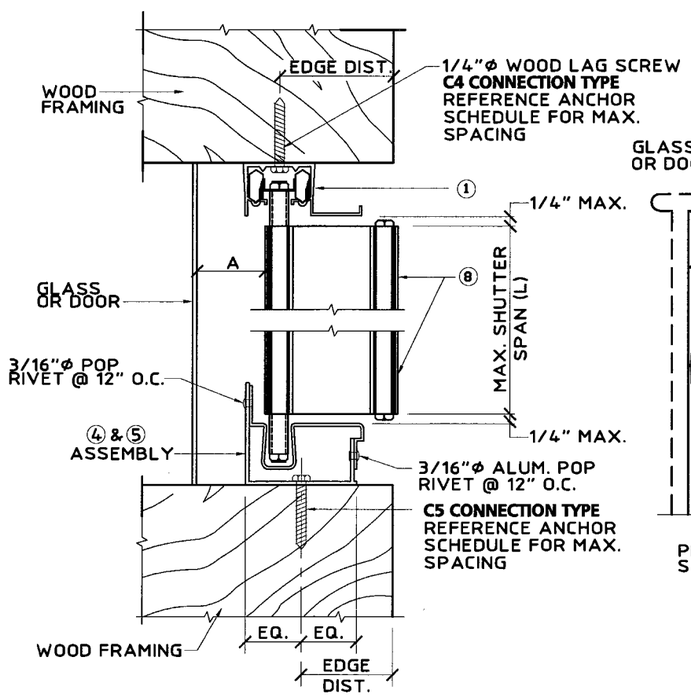

Ⓕ **CEILING/INSIDE MOUNT SECTION**

SCALE : 3"= 1'- 0"

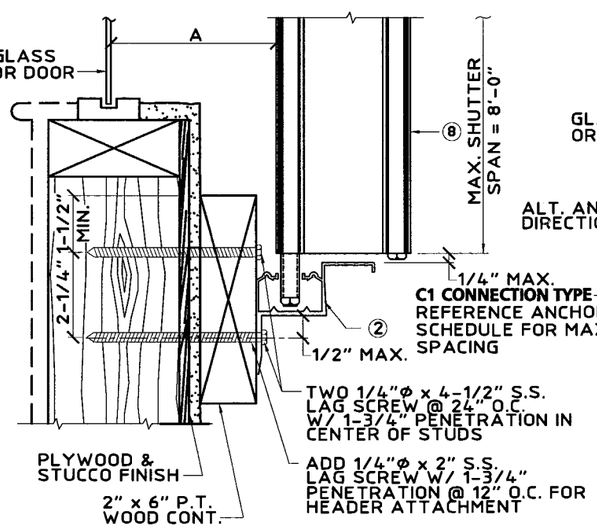

NOTE: THIS DETAIL MAY BE USED AT TOP OR BOTTOM OF PANEL.

MAX. DESIGN LOAD = 110.0 P.S.F.

Ⓖ **ALT. WALL MOUNT SECTION**

SCALE : 3"= 1'- 0"

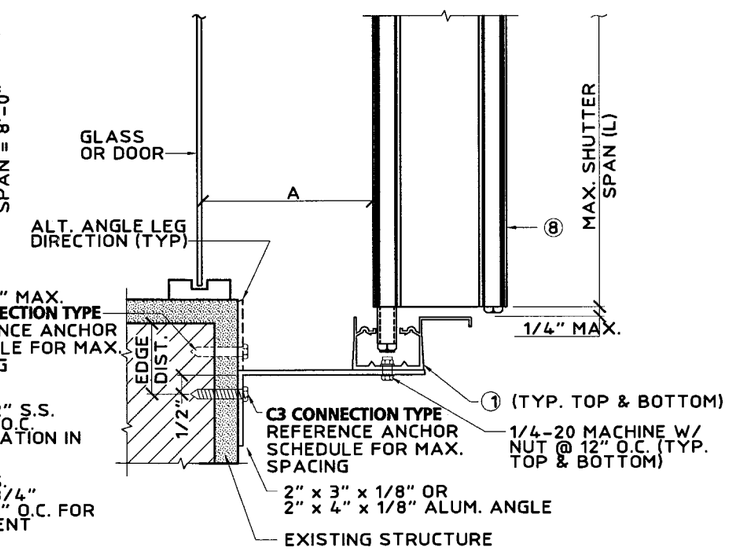

Ⓗ **ALT. BUILD-OUT MOUNT SECTION**

SCALE : 3"= 1'- 0"

PRODUCT REVISED
as complying with the Florida Building Code
Acceptance No. 05-0718.03
Expiration Date 09/05/2007
By Helena A. Melo
Miami Dade Product Control Division

Thornton-Tomasetti Group
330 N. Andrews Ave., Suite 450 • Ft. Lauderdale, FL 33301
Tel. (954) 522-3690 • Fax (954) 522-3691 • COA # 7519
Website: www.TheTTGroup.com

Copyright © 2006 Thornton-Tomasetti Group, Inc.

SUPER-FOLD ACCORDION SHUTTER

Manufacturers of Hurricane & Security Protection Products
6865 N.W. 36th Avenue
Miami, Florida 33147
Phone: (305) 635-0900
Toll Free: (800) 327-0905
Fax: (305) 634-9078
HURST AWNING COMPANY, INC.
"QUALITY SERVICE SINCE 1957"

V.J. Knezevich
Professional Engineer
FL License No.: PE 0010983

JUL 13 2006

revisions

no	date	by	description
0	06/30/2005	VJK	PREVIOUSLY DRAWING NO. 96-218
1	03/05/2006	VJK	COUNTY COMMENTS (NALAN IN BLOCK)
2	07/12/2006	VJK	COUNTY COMMENTS

date 06/30/2005
scale AS NOTED
drawn by MCR
design by VJK
checked by VJK
drawing no. 05-347
sheet 3 of 5

Print Information: P:\FL1\Projects\KK5347.00\Drawings\R2-sub\05-347-03.dwg MCantu 07/14/2006 09:59:30am 07/13/06 10:22

Print Information: P:\FL1\Projects\KK5347.00\Drawings\R2-sub\05-347-05.dwg MCantu 07/14/2006 09:59:40am 07/13/06 10:24

MAXIMUM ALLOWABLE SPAN SCHEDULE

NEGATIVE DESIGN LOAD (PSF)	MAIXIMUM ALLOWABLE SPAN (L) (FT - IN)
50.0	11' - 0"
60.0	11' - 0"
70.0	11' - 0"
80.0	11' - 0"
90.0	11' - 0"
100.0	11' - 0"
110.0	11' - 0"
120.0	11' - 0"
130.0	11' - 0"
140.0	10' - 11"
150.0	10' - 2"
160.0	9' - 7"
170.0	9' - 0"
180.0	8' - 6"
190.0	8' - 0"
200.0	7' - 8"
210.0	7' - 3"
220.0	6' - 11"

MINIMUM SEPARATION FROM GLASS

* FOR INSTALLATIONS WHERE A PORTION OF THE SHUTTER IS LESS THAN 30'-0" ABOVE GRADE, MIN. SEPARATION FROM GLASS SHALL BE 2-3/4". FOR INSTALLATIONS GREATER THAN 30'-0" ABOVE GRADE USE SCHEDULE BELOW.

POSITIVE DESIGN LOAD (PSF)	MAXIMUM ALLOWABLE SPAN (L) (FT - IN)	MINIMUM SEPARATION FROM GLASS (A) (IN)
30.0	L ≤ 5'-0"	1-1/8
	5'-0" < L ≤ 8'-0"	1-1/8
	8'-0" < L ≤ 11'-0"	1-1/2
40.0	L ≤ 5'-0"	1-1/8
	5'-0" < L ≤ 8'-0"	1-1/4
	8'-0" < L ≤ 11'-0"	1-5/8
50.0	L ≤ 5'-0"	1-1/8
	5'-0" < L ≤ 8'-0"	1-1/4
	8'-0" < L ≤ 11'-0"	1-3/4
60.0	L ≤ 5'-0"	1-1/8
	5'-0" < L ≤ 8'-0"	1-1/4
	8'-0" < L ≤ 11'-0"	1-7/8
70.0	L ≤ 5'-0"	1-1/8
	5'-0" < L ≤ 8'-0"	1-3/8
	8'-0" < L ≤ 11'-0"	2
80.0	L ≤ 5'-0"	1-1/8
	5'-0" < L ≤ 8'-0"	1-3/8
	8'-0" < L ≤ 11'-0"	2-1/8
90.0	L ≤ 5'-0"	1-1/8
	5'-0" < L ≤ 8'-0"	1-3/8
	8'-0" < L ≤ 11'-0"	2-1/4
100.0	L ≤ 5'-0"	1-1/8
	5'-0" < L ≤ 8'-0"	1-1/2
	8'-0" < L ≤ 11'-0"	2-1/2

PRODUCT REVISED
as complying with the Florida
Building Code
Acceptance No. 05-0718.03
Expiration Date 09/05/2007
By Helmy A. Mek
Miami Dade Product Control
Division

Thornton-Tomasetti Group
330 N. Andrews Ave., Suite 450 • Ft. Lauderdale, FL 33301
Tel. (954) 522-3690 • Fax (954) 522-3691 • COA # 7519
Website: www.TheTTGroup.com

Copyright © 2006 Thornton-Tomasetti Group, Inc.

SUPER-FOLD ACCORDION SHUTTER

Manufacturers of Hurricane & Security Protection Products
HURST AWNING COMPANY, INC.
"QUALITY SERVICE SINCE 1957"
6865 N.W. 36th Avenue
Miami, Florida 33147
Phone: (305) 635-0900
Toll Free: (800) 327-0905
Fax: (305) 634-9078

V.J. Knezevich
Professional Engineer
FL License No.: PE-0010983

JUL 13 2006

revisions

no	date	by	description
0	06/30/2005	VJK	PREVIOUSLY DRAWING NO. 96-218
1	03/03/2006	VJK	COUNTY COMMENTS (NAIL-IN BLOCK)
2	07/12/2006	VJK	COUNTY COMMENTS

date 06/30/2005
scale AS NOTED
drawn by MCR
design by VJK
checked by VJK
drawing no. 05-347
sheet 5 of 5