MIAMI-DADE COUNTY, FLORIDA
METRO-DADE FLAGLER BUILDING

BUILDING CODE COMPLIANCE OFFICE (BCCO)
PRODUCT CONTROL DIVISION

140 WEST FLAGLER STREET, SUITE 1603
MIAMI, FLORIDA 33130-1563
(305) 375-2901 FAX (305) 375-2908
www.buildingcodeonline.com

# NOTICE OF ACCEPTANCE (NOA)

**Traco Security Windows & Doors, Inc.**
**71 Progressive Ave**
**Cranberry Township, PA 16066**

**SCOPE:**

This NOA is being issued under the applicable rules and regulations governing the use of construction materials. The documentation submitted has been reviewed by Miami-Dade County Product Control Division and accepted by the Board of Rules and Appeals (BORA) to be used in Miami Dade County and other areas where allowed by the Authority Having Jurisdiction (AHJ).

This NOA shall not be valid after the expiration date stated below. The Miami-Dade County Product Control Division (In Miami Dade County) and/or the AHJ (in areas other than Miami Dade County) reserve the right to have this product or material tested for quality assurance purposes. If this product or material fails to perform in the accepted manner, the manufacturer will incur the expense of such testing and the AHJ may immediately revoke, modify, or suspend the use of such product or material within their jurisdiction. BORA reserves the right to revoke this acceptance, if it is determined by Miami-Dade County Product Control Division that this product or material fails to meet the requirements of the applicable building code.

This product is approved as described herein, and has been designed to comply with the Florida Building Code, including the High Velocity Hurricane Zone.

**DESCRIPTION: Series "(140) 440" Aluminum Single Hung Window**

**APPROVAL DOCUMENT:** Drawing No. **03-0809-113A**, titled "Series C-140 Aluminum Single-Hung Window (Small Missile SH-440)", sheets 1 through 5 of 5, prepared, signed and sealed by Frank L. Bennardo, P.E., dated 08/04/03, with revisions on 07/13/05, bearing the Miami-Dade County Product Control Revision stamp with the Notice of Acceptance number and expiration date by the Miami-Dade County Product Control Division. .

**MISSILE IMPACT RATING: Small Missile Impact**

**LABELING:** Each unit shall bear a permanent label with the manufacturer's name or logo, city, state and following statement: "Miami-Dade County Product Control Approved", unless otherwise noted herein.

**RENEWAL** of this NOA shall be considered after a renewal application has been filed and there has been no change in the applicable building code negatively affecting the performance of this product.

**TERMINATION** of this NOA will occur after the expiration date or if there has been a revision or change in the materials, use, and/or manufacture of the product or process. Misuse of this NOA as an endorsement of any product, for sales, advertising or any other purposes shall automatically terminate this NOA. Failure to comply with any section of this NOA shall be cause for termination and removal of NOA.

**ADVERTISEMENT:** The NOA number preceded by the words Miami-Dade County, Florida, and followed by the expiration date may be displayed in advertising literature. If any portion of the NOA is displayed, then it shall be done in its entirety.

**INSPECTION:** A copy of this entire NOA shall be provided to the user by the manufacturer or its distributors and shall be available for inspection at the job site at the request of the Building Official.

This NOA **revises NOA # 03-0812.03** and, consists of this page 1 and evidence page E-1 and E-2, as well as approval document mentioned above.

The submitted documentation was reviewed by **Herminio F. Gonzalez, P.E., Director, BCCO**

8/30/05

PRODUCT CONTROL ACCEPTED

**TRACO SECURITY WINDOWS & DOORS, INC.**

## NOTICE OF ACCEPTANCE: EVIDENCE SUBMITTED

**A. DRAWINGS**

1. Manufacturer's die drawings and sections.
2. Drawing No **03-0809-113A**, titled "Series "(140) 440" Aluminum Single Hung Window" Sheets 1 through 5 of 5, prepared, signed and sealed by Frank L. Bennardo, P.E. dated 08/04/03 and last revised on 07/13/05.

**B. TESTS**

1. Test reports on 1) Air Infiltration Test, per FBC, TAS 202-94
   2) Uniform Static Air Pressure Test, Loading per FBC, TAS 202-94
   3) Water Resistance Test, per FBC, TAS 202-94
   4) Small Missile Impact Test per FBC, TAS 201-94
   5) Cyclic Wind Pressure Loading per FBC, TAS 203-94

   along with marked-up drawings and installation diagram of aluminum single hung window, prepared by Fenestration Testing Laboratory, Inc., Test Report No. **FTL-2010,** dated 5/4/98, signed and sealed by Gilbert Diamond, P.E.
   ***"Submitted Under NOA# 03-0812.03"***
2. Test reports on 1) Air Infiltration Test, per FBC, TAS 202-94
   2) Uniform Static Air Pressure Test, Loading per FBC, TAS 202-94
   3) Water Resistance Test, per FBC, TAS 202-94
   4) Small Missile Impact Test per FBC, TAS 201-94
   5) Cyclic Wind Pressure Loading per FBC, TAS 203-94

   along with marked-up drawings and installation diagram of aluminum single hung window, prepared by Fenestration Testing Laboratory, Inc., Test Report No. **FTL-2006,** dated 5/4/98, signed and sealed by Gilbert Diamond, P.E.
   ***"Submitted Under NOA# 03-0812.03"***
3. Test report on: 1) Small Missile Impact Test per SFBC, PA 201-94
   2) Cyclic Wind Pressure Loading per SFBC, PA 203-94

   along with marked-up drawings and installation diagram of a reinforced aluminum single hung window, prepared by American Testing Lab of South Florida, Test Report No. **ATL-0608.02-00** dated 06/21/00, signed and sealed by William R. Mehner, P.E.
   ***"Submitted Under NOA# 03-0812.03"***

**C. CALCULATIONS**

1. Revised Anchor Calculation and structural analysis, dated 06/16/05, prepared, signed and sealed by Frank L. Bennardo, P.E.
2. Revised Calculations for NOA 02-0604.03, dated 07/17/03, prepared, signed and sealed by Frank L. Bennardo, P.E.
   ***"Submitted Under NOA# 03-0812.03"***

for M Hall

**Herminio F. Gonzalez, P.E.**
**Director, Building Code Compliance Office**
**NOA No 05-0725.10**
**Expiration Date: June 10, 2007**
**Approval Date: September 22, 2005**

## NOTICE OF ACCEPTANCE: EVIDENCE SUBMITTED

3. Anchor Calculations, ASTM-E1300, dated 7/17/03, and structural analysis, prepared, signed and sealed by Frank L. Bennardo, P.E.
   ***"Submitted Under NOA# 03-0812.03"***

**D. QUALITY ASSURANCE**

1. Miami Dade Building Code Compliance Office (BCCO).

**E. MATERIAL CERTIFICATIONS**

1. Notice of Acceptance No. 03-0417.01 issued to "Cardinal L.G." for "Cardinal Interlayer PVB" dated 05/15/03, expiring on 12/30/07

**F. STATEMENTS**

1. Statement letter of conformance and no financial interest, dated June 30, 2005, signed and sealed by Frank L. Bennardo, P.E.

**G. OTHER**

1. Letter from the consultant, dated August 08, 2005, stating that the product is in compliance with the Florida Building Code (FBC).
2. Notice of Acceptance No. **03-0812.03**, issued to Traco Windows & Doors, Inc., Series 440 (140) Aluminum Single Hung Window, approved on 04/08/04 and expiring on 06/10/07.

for M Haab

**Herminio F. Gonzalez, P.E.**
**Director, Building Code Compliance Office**
**NOA No 05-0725.10**
**Expiration Date: June 10, 2007**
**Approval Date: September 22, 2005**

# SMALL MISSILE IMPACT RESISTANT SH-440 SINGLE-HUNG WINDOW

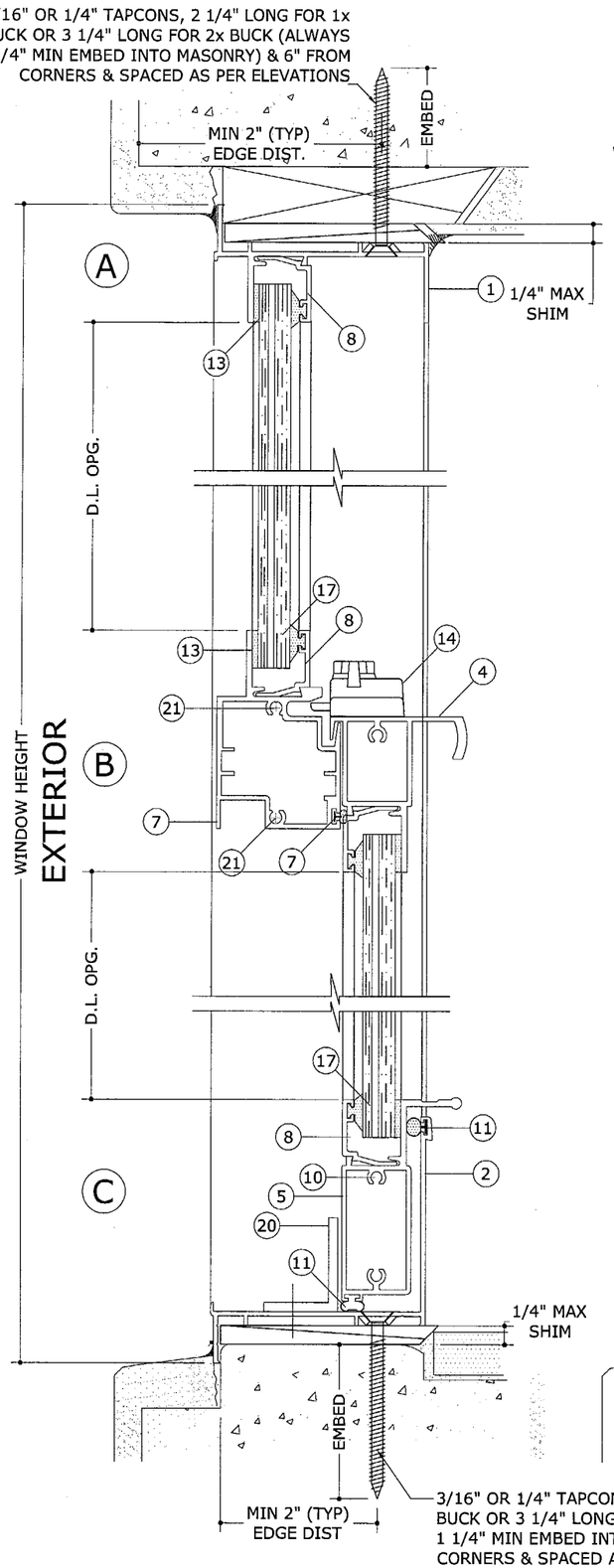


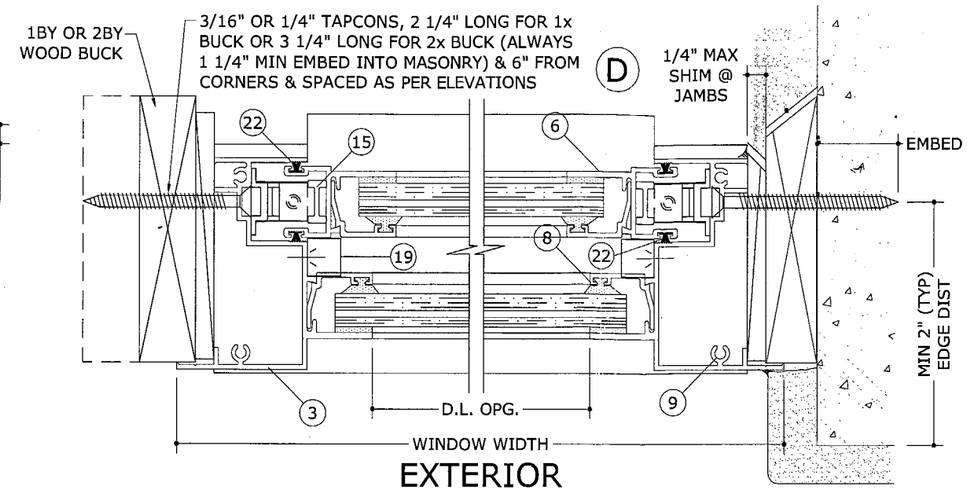


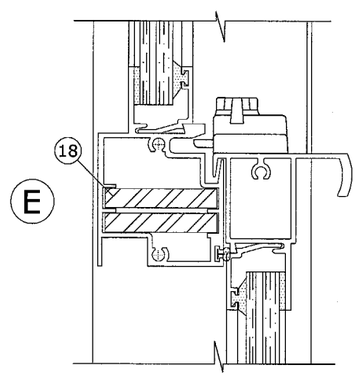


SEE CHART ON SHEET 5 FOR REINFORCED MTG. RAIL

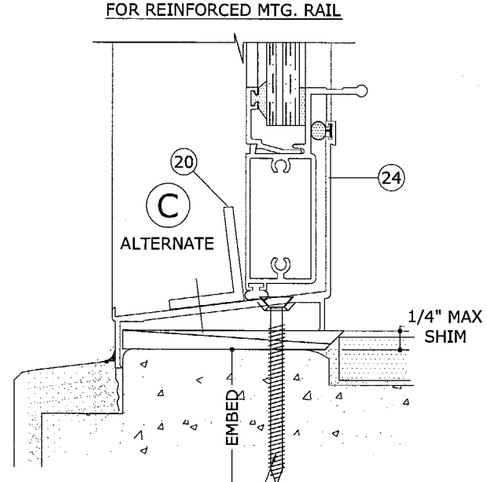


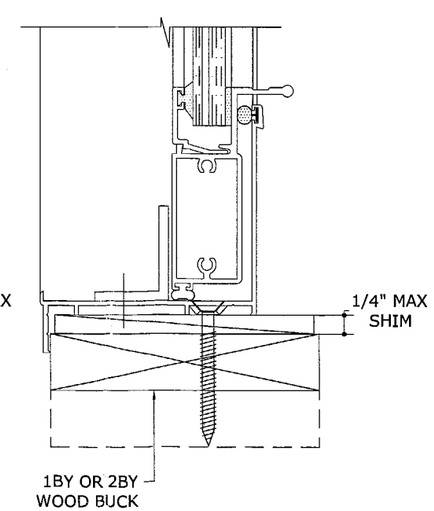


7/16" LAMINATED GLASS
SMALL MISSLE IMPACT RESISTANT WINDOWS
SHUTTERS NOT REQUIRED FOR INSTALLATIONS ABOVE 30 FT. OF GRADE.

SEE SHEET 4 FOR GLAZING DETAILS.

## GLAZING NOTES:

SEALANTS:

ALL INSTALLATION SCREW, FRAME & PANEL CORNER SEAMS SEALED WITH SCHNEE MOREHEAD 5504.

## GENERAL NOTES:

1. THE SINGLE-HUNG WINDOW SYSTEM DESCRIBED HEREIN HAS BEEN DESIGNED AND TESTED IN COMPLIANCE WITH THE 2004 FLORIDA BUILDING CODE, HIGH VELOCITY HURRICANE ZONES, AND MIAMI-DADE COUNTY PROTOCOLS TAS 201, 202 & 203.

2. POSITIVE AND NEGATIVE DESIGN PRESSURES CALCULATED FOR USE WITH THIS DOOR SYSTEM SHALL BE DETERMINED BY OTHERS ON A JOB-SPECIFIC BASIS IN ACCORDANCE WITH THE GOVERNING CODE.

3. THE WINDOW SYSTEM DETAILED HEREIN HAS BEEN TESTED PER MIAMI-DADE COUNTY PROTOCOLS TAS-201, TAS-202, & TAS-203 AS REFERENCED IN TEST REPORTS BY FENESTRATION TESTING LABORATORIES (FTL) AND AMERICAN TEST LABORATORY (ATL). MULTIPLE WINDOW UNITS MUST BE INSTALLED USING MIAMI-DADE COUNTY BCCO-APPROVED STRUCTURAL MULLIONS (e.g. NOA #01-1218.01 OR #01-1218.02).

4. THE WINDOW SYSTEM DETAILED HEREIN IS GENERIC AND DOES NOT PROVIDE INFORMATION FOR A SPECIFIC SITE. FOR SITE CONDITIONS DIFFERENT FROM THE CONDITIONS DETAILED HEREIN, A LICENSED ENGINEER OR REGISTERED ARCHITECT SHALL PREPARE SITE SPECIFIC DOCUMENTS FOR USE IN CONJUNCTION WITH THIS DOCUMENT.

5. PERMIT HOLDER SHALL VERIFY THE ADEQUACY OF THE EXISTING STRUCTURE TO WITHSTAND SUPERIMPOSED LOADS. WOOD BUCKS (NOT BY TRACO) SHALL BE ANCHORED PROPERLY TO TRANSFER LOADS TO THE EXISTING STRUCTURE.

6. ANCHORS SHALL BE AS LISTED, SPACED AS SHOWN ON DETAILS. ANCHOR EMBEDMENT TO BASE MATERIAL SHALL BE BEYOND WALL DRESSING OR STUCCO

7. WINDOW PANELS GLAZED WITH 7/16" LAMINATED GLASS ARE SMALL MISSILE IMPACT RESISTANT AND SHALL BE PROTECTED WITH MIAMI-DADE COUNTY APPROVED IMPACT RESISTANT SHUTTERS FOR INSTALLATIONS UP TO 30 FEET ABOVE GRADE. NO PROTECTION REQUIRED FOR INSTALLATIONS ABOVE 30 FEET ABOVE GRADE.

8. ALL STEEL IN CONTACT WITH ALUMINUM SHALL BE PAINTED OR PLATED.

PRODUCT REVIEWED
as complying with the Florida Building Code
Acceptance No. 05-0725.10
Expiration Date 06/10/07
By
Miami Dade Product Control Division

TAPCONS AS MANUFACTURED BY ELCO OR EQUIVALENT CONCRETE ANCHOR HOLDING CURRENT NOTICE OF ACCEPTANCE.

FRANK L. BENNARDO, P.E.
# PE0046549
07/13/2005


FRANK L. BENNARDO, P.E., INC.
CONSULTING ENGINEERS
4441 NORTH DIXIE HIGHWAY
BOCA RATON, FL 33431
(561) 391-2888 FAX: (561) 391-2862
WWW.FLBENGINEERING.COM
CERTIFICATE OF AUTHORIZATION: #9885



TRACO
Windows & Doors Inc.
71 Progress Avenue, Cranberry Township, PA 16166
Tel. (724) 776-7000


SERIES C-140 ALUMINUM SINGLE-HUNG WINDOW (SMALL MISSILE SH-440)

| REMARKS | DRWN | CHKD | DATE |
|---|---|---|---|
| INIT ISSUE | CL | FLB | 08/04/03 |
| REV 1 - COUNTY COMMENT | CL | FLB | 10/02/03 |
| REV 2 - SMALL/NON SPLIT | CL | FLB | 01/28/04 |
| REV 3 - 2004 FBC | CL | FLB | 07/13/05 |
| - | CL | - | - |
| - | - | - | - |

03-0809-113a

PAGE SCALE: 6"=1'

DESCRIPTION:




07/13/2005 - 4:45pm AndreL F:\01 Project Files\Traco\Product Approvals\Traco C-140 Single-Hung\Traco C-140 Single-Hung, Small Missile (440) (03-0809-113a) REV4.1.dwg

# UNREINFORCED MEETING RAIL

DESIGN LOAD CAPACITY - PSF

| WINDOW DIMENSIONS | | | EQUAL LITES & UNEQUAL LITES (FULL VIEW) 7/16" LAM GLASS | | | |
|---|---|---|---|---|---|---|
| | | | 3/16" TAPCONS | | 1/4" TAPCONS | |
| WIDTH | HEIGHT | * NUM. OF ANCHORS | POS | NEG | POS | NEG |
| 19-1/8" | 38-3/8" | 5 / 5 | 102.0 | 137.0 | 102.0 | 137.0 |
| 26-1/2" | | 5 / 5 | 102.0 | 137.0 | 102.0 | 137.0 |
| 37" | | 5 / 5 | 102.0 | 137.0 | 102.0 | 137.0 |
| 53-1/8" | | 6 / 5 | 102.0 | 137.0 | 102.0 | 137.0 |
| 19-1/8" | 50-5/8" | 5 / 5 | 102.0 | 137.0 | 102.0 | 137.0 |
| 26-1/2" | | 5 / 5 | 102.0 | 137.0 | 102.0 | 137.0 |
| 37" | | 5 / 5 | 102.0 | 137.0 | 102.0 | 137.0 |
| 53-1/8" | | 6 / 5 | 102.0 | 106.0 | 102.0 | 137.0 |
| 19-1/8" | 58" | 6 / 6 | 102.0 | 137.0 | 102.0 | 137.0 |
| 26-1/2" | | 6 / 6 | 102.0 | 137.0 | 102.0 | 137.0 |
| 37" | | 7 / 6 | 102.0 | 137.0 | 102.0 | 137.0 |
| 53-1/8" | | 8 / 6 | 102.0 | 111.0 | 102.0 | 137.0 |
| 19-1/8" | 63" | 7 / 7 | 102.0 | 137.0 | 102.0 | 137.0 |
| 26-1/2" | | 7 / 7 | 102.0 | 137.0 | 102.0 | 137.0 |
| 37" | | 8 / 7 | 102.0 | 137.0 | 102.0 | 137.0 |
| 53-1/8" | | 8 / 7 | 102.0 | 102.2 | 102.0 | 137.0 |
| 19-1/8" | 74-1/4" | 7 / 7 | 102.0 | 137.0 | 102.0 | 137.0 |
| 26-1/2" | | 7 / 7 | 102.0 | 137.0 | 102.0 | 137.0 |
| 37" | | 8 / 7 | 102.0 | 124.5 | 102.0 | 137.0 |
| 53-1/8" | | 9 / 8 | 94.0 | 94.0 | 102.0 | 128.8 |
| 19-1/8" | 84" | 7 / 7 | 102.0 | 137.0 | 102.0 | 137.0 |
| 26-1/2" | | 7 / 7 | 102.0 | 137.0 | 102.0 | 137.0 |
| 37" | | 8 / 7 | 102.0 | 110.1 | 102.0 | 137.0 |
| 53-1/8" | | 9 / 8 | 83.1 | 83.1 | 102.0 | 113.8 |

* NUM OF ANCHORS INDICATES NUMBER OF ANCHORS PER JAMB,
TO BE READ AS FOLLOWS: (NUM OF 3/16" TAPCONS) / (NUM OF 1/4" TAPCONS)

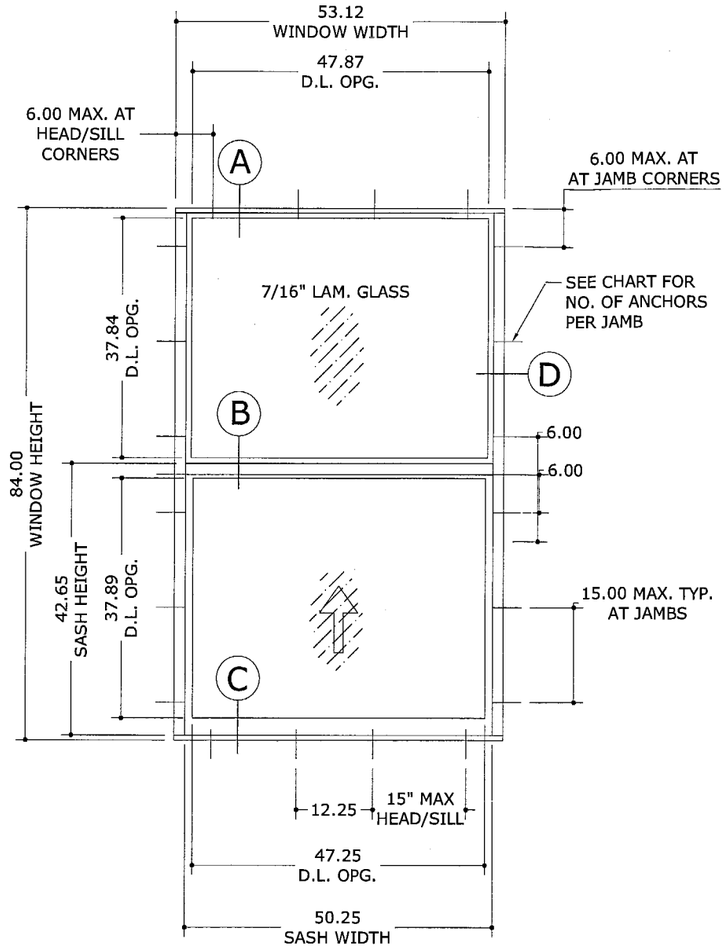


## TYPICAL ELEVATION

EQUAL LITES

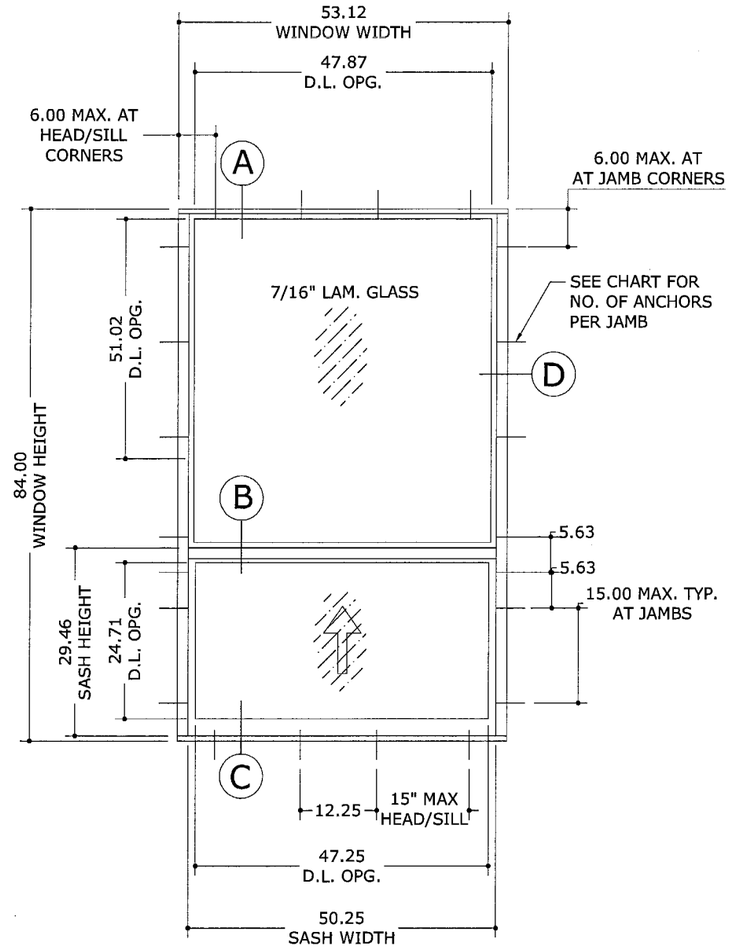


## TYPICAL ELEVATION

UNEQUAL LITES (FULL VIEW)

## UN-REINFORCED MEETING RAIL

SEE DETAIL SHEET 1

7/16" LAMINATED GLASS
SMALL MISSLE IMPACT RESISTANT WINDOWS
SHUTTERS NOT REQUIRED FOR INSTALLATIONS
ABOVE 30 FT. OF GRADE.

SEE SHEET 4 FOR GLAZING DETAILS.

TAPCONS AS MANUFACTURED BY
ELCO OR EQUIVALENT CONCRETE ANCHOR
HOLDING CURRENT NOTICE OF ACCEPTANCE.

PRODUCT REVISED
as complying with the Florida
Building Code
Acceptance No. 05-0725.10
Expiration Date 06/10/07
By
Miami Dade Product Control
Division


FRANK L. BENNARDO, P.E.
# PE0046549
07/13/2005

FRANK L. BENNARDO, P.E., INC.
CONSULTING ENGINEERS
4441 NORTH DIXIE HIGHWAY
BOCA RATON, FL 33431
(561) 391-2888 FAX: (561) 391-2862
WWW.FLBENGINEERING.COM
CERTIFICATE OF AUTHORIZATION: #9885


TRACO
Windows & Doors Inc.
71 Progress Avenue,
Cranberry Township, PA 16066
Tel. (724) 776-7000

SERIES C-140 ALUMINUM SINGLE-HUNG
WINDOW (SMALL MISSILE SH-440)

| REMARKS | DRWN | CHKD | DATE |
|---|---|---|---|
| INIT ISSUE | CL | FLB | 08/04/03 |
| REV 1 - COUNTY COMMENT | CL | FLB | 10/02/03 |
| REV 2 - SMALL/NON SPLIT | CL | FLB | 01/28/04 |
| REV 3 - 2004 FBC | CL | FLB | 07/13/05 |
| | | | |

03-0809-113a

PAGE SCALE: N.T.S.
DESCRIPTION:




WINDOW (SMALL MISSILE SH-440)
CERTIFICATE OF AUTHORIZATION: #9885
F:\01 Project Files\Traco\Product Approvals\Traco C-140 Single-Hung\Traco C-140 Single-Hung, Small Missile (440) (03-0809-113a) REV4.1.dwg
07/13/2005 - 4:46pm AndreL

# REINFORCED MEETING RAIL

DESIGN LOAD CAPACITY - PSF

| WINDOW DIMENSIONS | | | EQUAL LITES 1/4" TAPCONS 7/16" LAM GLASS | |
|---|---|---|---|---|
| WIDTH | HEIGHT | NUM OF* ANCHORS | POS | NEG |
| 19-1/8" | 38-3/8" | 6 | 102.0 | 210.0 |
| 26-1/2" | | 6 | 102.0 | 210.0 |
| 37" | | 6 | 102.0 | 210.0 |
| 53-1/8" | | 6 | 102.0 | 207.7 |
| 19-1/8" | 50-5/8" | 7 | 102.0 | 210.0 |
| 26-1/2" | | 7 | 102.0 | 210.0 |
| 37" | | 7 | 102.0 | 210.0 |
| 53-1/8" | | 8 | 102.0 | 188.9 |
| 19-1/8" | 58" | 9 | 102.0 | 210.0 |
| 26-1/2" | | 9 | 102.0 | 210.0 |
| 37" | | 9 | 102.0 | 210.0 |
| 53-1/8" | | 10 | 102.0 | 192.4 |
| 19-1/8" | 63" | 9 | 102.0 | 210.0 |
| 26-1/2" | | 9 | 102.0 | 210.0 |
| 37" | | 9 | 102.0 | 210.0 |
| 53-1/8" | | 10 | 102.0 | 177.1 |
| 19-1/8" | 74-1/4" | 9 | 102.0 | 210.0 |
| 26-1/2" | | 9 | 102.0 | 210.0 |
| 37" | | 10 | 102.0 | 210.0 |
| 53-1/8" | | 11 | 102.0 | 161.0 |
| 19-1/8" | 84" | 11 | 102.0 | 210.0 |
| 26-1/2" | | 11 | 102.0 | 210.0 |
| 37" | | 12 | 102.0 | 210.0 |
| 53-1/8" | | 12 | 102.0 | 151.8 |

# REINFORCED MEETING RAIL

DESIGN LOAD CAPACITY - PSF

| WINDOW DIMENSIONS | | | UNEQUAL LITES (FULL VIEW) 1/4" TAPCONS 7/16" LAM GLASS | |
|---|---|---|---|---|
| WIDTH | HEIGHT | NUM OF* ANCHORS | POS | NEG |
| 19-1/8" | 63" | 9 | 102.0 | 210.0 |
| 26-1/2" | | 9 | 102.0 | 210.0 |
| 37" | | 9 | 102.0 | 210.0 |
| 53-1/8" | | 10 | 102.0 | 177.1 |
| 19-1/8" | 74-1/4" | 9 | 102.0 | 210.0 |
| 26-1/2" | | 9 | 102.0 | 210.0 |
| 37" | | 10 | 102.0 | 210.0 |
| 53-1/8" | | 11 | 102.0 | 161.0 |
| 19-1/8" | 84" | 11 | 102.0 | 210.0 |
| 26-1/2" | | 11 | 102.0 | 210.0 |
| 37" | | 12 | 102.0 | 210.0 |
| 53-1/8" | | 12 | 102.0 | 151.8 |

*NUM OF ANCHORS INDICATES NUMBER OF ANCHORS PER JAMB

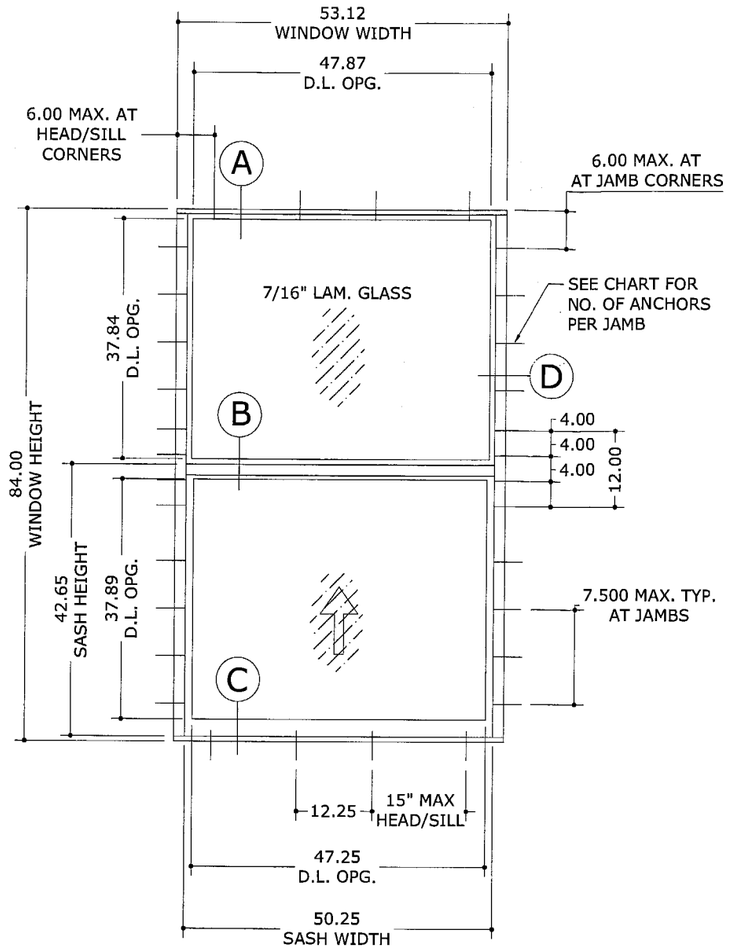


## TYPICAL ELEVATION

EQUAL LITES

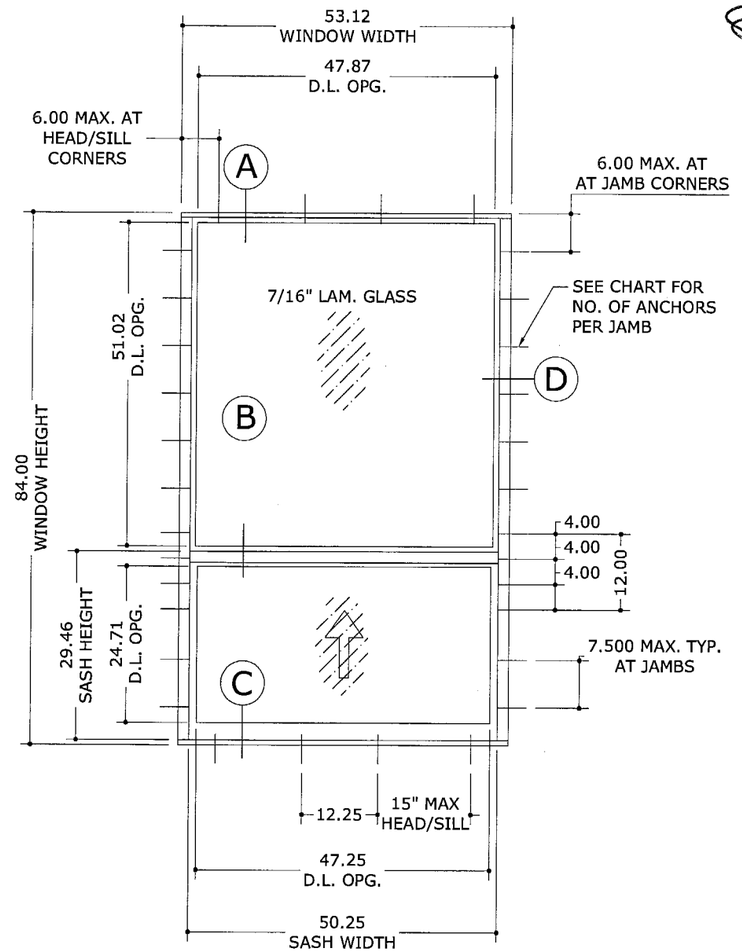


## TYPICAL ELEVATION

UNEQUAL LITES (FULL VIEW)

## REINFORCED MEETING RAIL

SEE DETAIL SHEET 1

PRODUCT REVIEWED
as complying with the Florida
Building Code
Acceptance No. 03-0725.10
Expiration Date 06/10/07
By: [illegible]
Miami Dade Product Control
Division

7/16" LAMINATED GLASS
SMALL MISSLE IMPACT RESISTANT WINDOWS
SHUTTERS NOT REQUIRED FOR INSTALLATIONS
ABOVE 30 FT. OF GRADE.

SEE SHEET 4 FOR GLAZING DETAILS.

TAPCONS AS MANUFACTURED BY
ELCO OR EQUIVALENT CONCRETE ANCHOR
HOLDING CURRENT NOTICE OF ACCEPTANCE.


FRANK L. BENNARDO, P.E.
# PE0046549
07/13/2005

FRANK L. BENNARDO, P.E., INC.
CONSULTING ENGINEERS
4441 NORTH DIXIE HIGHWAY
BOCA RATON, FL 33431
(561) 391-2888 FAX: (561) 391-2362
WWW.FLBENGINEERING.COM
CERTIFICATE OF AUTHORIZATION: #9985


TRACO
Windows & Doors Inc.
71 Progress Avenue,
Cranberry Township, PA 16166
Tel. (724) 776-7000

SERIES C-140 ALUMINUM SINGLE-HUNG
WINDOW (SMALL MISSILE SH-440)

| REMARKS | DRWN | CHKD | DATE |
|---|---|---|---|
| INIT ISSUE | CL | FLB | 08/04/03 |
| REV 1 - COUNTY COMMENT | CL | FLB | 10/02/03 |
| REV 2 - SMALL/NON SPLIT | CL | FLB | 01/28/04 |
| REV 3 - 2004 FBC | CL | FLB | 07/13/05 |
| - | - | - | - |

03-0809-113a

PAGE SCALE: N.T.S.

DESCRIPTION:




07/13/2005 - 4:47pm AndreL F:\01 Project Files\Traco\Product Approvals\Traco C-140 Single-Hung\Traco C-140 Single-Hung, Small Missile (440) (03-0809-113a) REV4.1.dwg

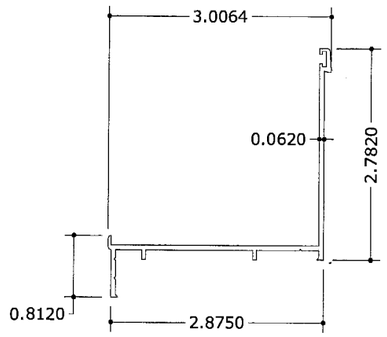


2 FRAME SILL

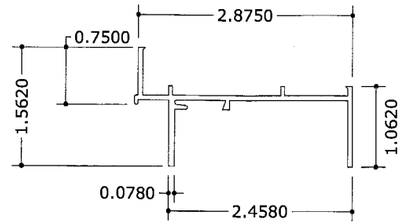


1 FRAME HEAD

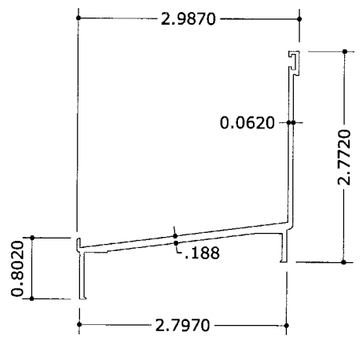


2A ALT. FRAME SILL

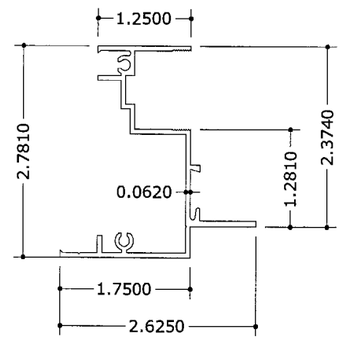


3 FRAME JAMB

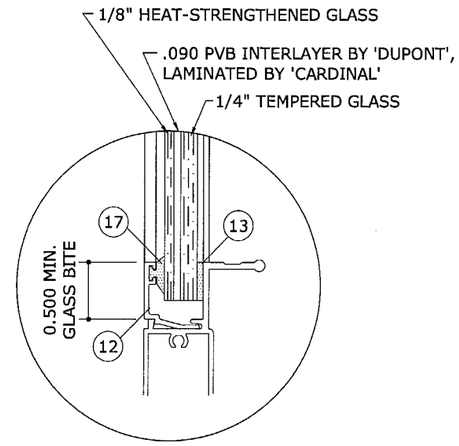


GLAZING DETAIL

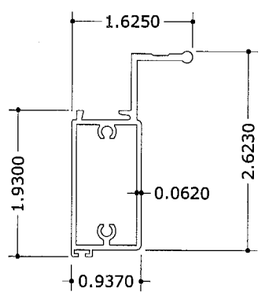


5 BOTTOM VENT BOTTOM RAIL

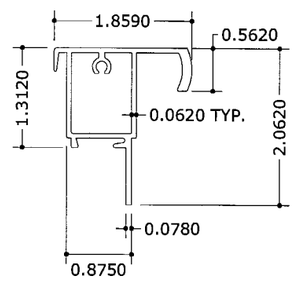


4 BOTTOM VENT TOP RAIL

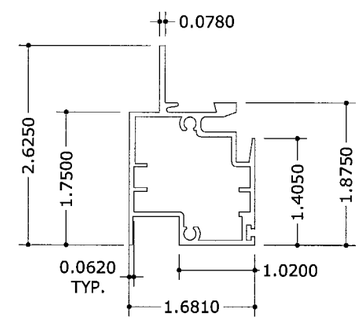


7 MEETING RAIL

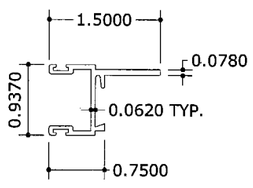


6 SASH SIDE RAIL

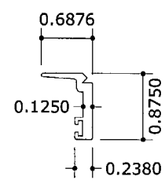


8 GLASS STOP (1/4" GLASS)

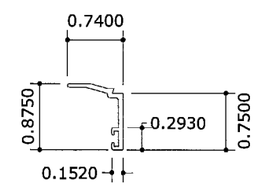


12 GLASS STOP (7/16" GLASS)

PRODUCT REVIEWED
as complying with the Florida Building Code
Acceptance No. 05-0725.10
Expiration Date 06/10/07
By
Miami Dade Product Control Division


FRANK L. BENNARDO, P.E.
# PE0046549
07/13/2005
FRANK L. BENNARDO, P.E., INC.
CONSULTING ENGINEERS
4441 NORTH DIXIE HIGHWAY
BOCA RATON, FL 33431
(561) 391-2888 FAX: (561) 391-2862
WWW.FLBENGINEERING.COM
CERTIFICATE OF AUTHORIZATION: #9885


TRACO
Windows & Doors Inc.
71 Progress Avenue, Cranberry Township, PA 16166
Tel. (724) 776-7000

SERIES C-140 ALUMINUM SINGLE-HUNG WINDOW (SMALL MISSILE SH-440)

| REMARKS | DRWN | CHKD | DATE |
|---|---|---|---|
| INIT ISSUE | CL | FLB | 08/04/03 |
| REV 1 - COUNTY COMMENT | CL | FLB | 10/02/03 |
| REV 2 - SMALL/NON SPLIT | CL | FLB | 01/28/04 |
| REV 3 - 2004 FBC | CL | FLB | 07/13/05 |
| - | - | - | - |

03-0809-113a

PAGE SCALE: 6"=1'

DESCRIPTION:




07/13/2005 - 4:47pm AndreL F:\01 Project Files\Traco\Product Approvals\Traco C-140 Single-Hung\Traco C-140 Single-Hung, Small Missile (440) (03-0809-113a) REV4.1.dwg

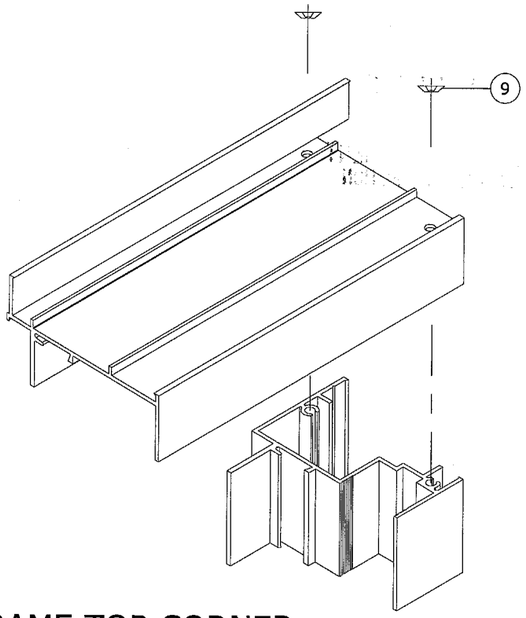


FRAME TOP CORNER

| ITEM NO. | PART NUMBER | QUANTITY | DESCRIPTION | MATERIAL | MANF./SUPPLIER/REMARKS |
|---|---|---|---|---|---|
| 1 | 050-00-572 | 1 | HEAD | 6063-T6 | TIFTON |
| 2 | 050-00-585 | 1 | SILL | 6063-T6 | TIFTON |
| 2A | 050-00-308 | 1 | ALTERNATE SILL | 6063-T6 | TIFTON |
| 3 | 050-00-586 | 2 | JAMB | 6063-T5 | TIFTON |
| 4 | 050-00-571 | 1 | VENT TOP | 6063-T6 | TIFTON |
| 5 | 050-00-548 | 1 | VENT BOTTOM | 6063-T5 | TIFTON |
| 6 | 051-00-570 | 2 | VENT SIDE | 6063-T6 | TIFTON |
| 7 | 050-00-573 | 1 | MEETING RAIL | 6063-T6 | TIFTON |
| 8 | 050-00-569 | 4/ LITE | GLASS STOP (1/4" GLASS) | 6063-T6 | TIFTON |
| 9 | 012-00-832 | AS REQD. | FRAME ASSEMBLY SCREW | | #8 X 3/4" PHPH SMS |
| 10 | 050-00-000 | AS REQD. | VENT ASSEMBLY SCREW | | #8 X 1" PHPH SMS |
| 11 | 046-00-048 | AS REQD. | W'STRIPPING (FABRIC COATED FOAM) | | SCHLEGEL Q-LON .375 X .190 |
| 12 | 050-00-759 | 4/LITE | GLASS STOP (7/16" GLASS) | 6063-T6 | - |
| 13 | 050-00-000 | AS REQD. | GLAZING TAPE (.090 THICK) | | TREMCO #440 |
| 14 | 007-10-016 | 2 | SWEEP LOCK (AT 6-3/4" FROM ENDS) | ZINC CAST | MARBOLLO INT. |
| 15 | 046-16-030 | 2 | BLOCK AND TACKLE BALANCE | | WINDOW COMPONENTS (5/8" BOX) |
| 16 | - | - | - | | - |
| 17 | 000-00-000 | AS REQD. | GLAZING WEDGE | | WIBORG VINYL / WV-8160 |
| 18 | - | 2 | REINFORCING BARS FULL LENGTH | STEEL | 1-1/2" X 1/4" |
| 19 | 000-00-000 | 2 | VENT GUIDE | NYLON | 1/2" X 7/8" X 3/8"HI. - W/ #6 X 1/2" |
| 20 | 000-00-000 | 1 | ALUM ANGLE (1x1\|x_"x3" LG) AT MIDSPAN | 6063-T5 | FASTENED WITH (2) #10 X 2 SMS |
| 21 | | AS REQD. | MTG. RAIL ASSEMBLY SCREW | | #10 X 1" PHPH SMS |
| 22 | 047-00-015 | AS REQD. | FIN SEAL PILE | | ULTRAFAB |

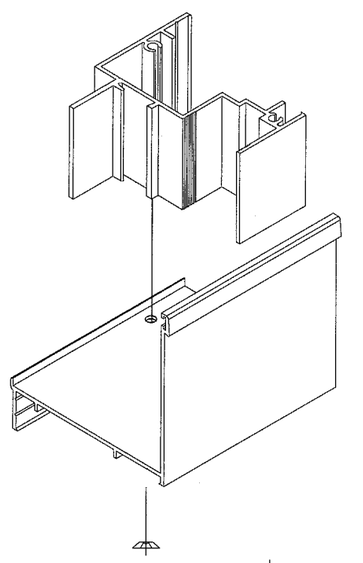


FRAME BOTTOM CORNER

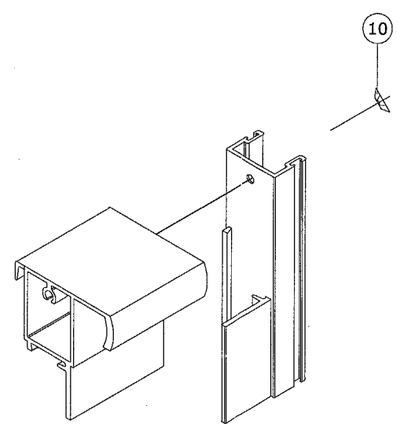


VENT TOP CORNER

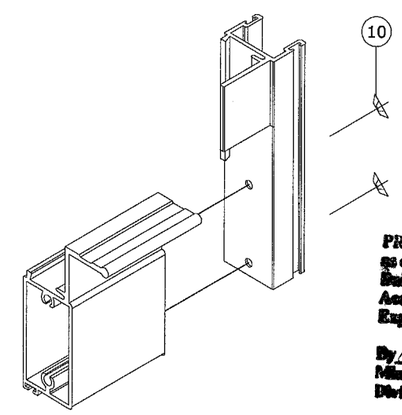


VENT BOTTOM CORNER

PRODUCT REVISED
as complying with the Florida
Building Code
Acceptance No. 05-0725.10
Expiration Date 06/10/07
By
Miami Dade Product Control
Division

FRANK L. BENNARDO, P.E.
# PE0046549
07/13/2005

FRANK L. BENNARDO, P.E., INC.
CONSULTING ENGINEERS
4441 NORTH DIXIE HIGHWAY
BOCA RATON, FL 33431
(561) 391-2888 FAX: (561) 391-2862
WWW.FLBENGINEERING.COM
CERTIFICATE OF AUTHORIZATION: #9885

TRACO
Windows & Doors Inc.
71 Progress Avenue,
Cranberry Township, PA 16166
Tel. (724) 776-7000

SERIES C-140 ALUMINUM SINGLE-HUNG
WINDOW (SMALL MISSILE SH-440)

| REMARKS | DRWN | CHKD | DATE |
|---|---|---|---|
| INIT ISSUE | CL | FLB | 08/04/03 |
| REV 1 - COUNTY COMMENT | CL | FLB | 10/02/03 |
| REV 2 - SMALL/NON SPLIT | CL | FLB | 01/28/04 |
| REV 3 - 2004 FBC | CL | FLB | 07/13/05 |
| - | | - | - |

03-0809-113a

PAGE SCALE: N.T.S.

DESCRIPTION:



07/13/2005 - 4:49pm AndreL F:\01 Project Files\Traco\Product Approvals\Traco C-140 Single-Hung\Traco C-140 Single-Hung, Small Missile (440) (03-0809-113a) REV4.1.dwg