MIAMI-DADE

BUILDING CODE COMPLIANCE OFFICE (BCCO)
PRODUCT CONTROL DIVISION

MIAMI-DADE COUNTY, FLORIDA
METRO-DADE FLAGLER BUILDING
140 WEST FLAGLER STREET, SUITE 1603
MIAMI, FLORIDA 33130-1563
(305) 375-2901 FAX (305) 375-2908

NOTICE OF ACCEPTANCE (NOA)

Roll-a-Way Security Shutters
10601 Oak Street N.E.
St. Petersburg, Florida 33716

SCOPE:
This NOA is being issued under the applicable rules and regulations governing the use of construction materials. The documentation submitted has been reviewed by Miami-Dade County Product Control Division and accepted by the Board of Rules and Appeals (BORA) to be used in Miami Dade County and other areas where allowed by the Authority Having Jurisdiction (AHJ).

This NOA shall not be valid after the expiration date stated below. The Miami-Dade County Product Control Division (In Miami Dade County) and/or the AHJ (in areas other than Miami Dade County) reserve the right to have this product or material tested for quality assurance purposes. If this product or material fails to perform in the accepted manner, the manufacturer will incur the expense of such testing and the AHJ may immediately revoke, modify, or suspend the use of such product or material within their jurisdiction. BORA reserves the right to revoke this acceptance, if it is determined by Miami-Dade County Product Control Division that this product or material fails to meet the requirements of the applicable building code.
This product is approved as described herein, and has been designed to comply with the High Velocity Hurricane Zone of the Florida Building Code.

DESCRIPTION: Extruded Aluminum Roll-up Shutter

APPROVAL DOCUMENT: Drawing No. 3-01-024, titled "Roll-Up Shutter Details", prepared by D.L.Fowler, P.E. dated 03/15/02, sheets 1 through 19 of 19 signed on 07/12/05 by D.L.Fowler, P.E. bearing the Miami-Dade County Product Control Revision stamp with the Notice of Acceptance number and expiration date by the Miami-Dade County Product Control Division.

MISSILE IMPACT RATING: Large and Small Missile Impact

LABELING: Each unit shall bear a permanent label with the manufacturer's name or logo, city, state and the following statement: "Miami-Dade County Product Control Approved", unless otherwise noted herein.

RENEWAL of this NOA shall be considered after a renewal application has been filed and there has been no change in the applicable building code negatively affecting the performance of this product.

TERMINATION of this NOA will occur after the expiration date or if there has been a revision or change in the materials, use, and/or manufacture of the product or process. Misuse of this NOA as an endorsement of any product, for sales, advertising or any other purposes shall automatically terminate this NOA. Failure to comply with any section of this NOA shall be cause for termination and removal of NOA.

ADVERTISEMENT: The NOA number preceded by the words Miami-Dade County, Florida, and followed by the expiration date may be displayed in advertising literature. If any portion of the NOA is displayed, then it shall be done in its entirety.

INSPECTION: A copy of this entire NOA shall be provided to the user by the manufacturer or its distributors and shall be available for inspection at the job site at the request of the Building Official.
This NOA **revises NOA # 02-1003.06** and consists of this page 1, evidence page E1, as well as approval document mentioned above.
The submitted documentation was reviewed by **Mohammed Iqbal Shaikh, P.E.**

PRODUCT CONTROL ACCEPTED
03/22/07

Roll-a-Way Security Shutters

NOTICE OF ACCEPTANCE: EVIDENCE SUBMITTED

A. DRAWINGS

Drawing No. 3-01-024, titled "Roll-Up Shutter Details", prepared by D.L.Fowler, P.E. Dated 03/15/02 Sheets 1 thru 19 of 19 signed on 07/12/05 by D.L.Fowler, P.E.

B. TESTS

See NOA 02-1003.06

C. CALCULATIONS

See NOA 02-1003.06

D. QUALITY ASSURANCE

Miami- Dade County Product Control Office

E. MATERIAL CERTIFICATIONS

See NOA 02-1003.06

F. STATEMENTS

1. Letter of revisions and Code Compliance from Roll-A-Way Shutter, dated 07/15/07 signed by Donald E. Fowler, P.E.

Mohammed Iqbal Shaikh, P.E.
Sr. Building Code Compliance Specialist
NOA NO. 05-0725.13
Expiration Date: 07/15/2007
Approval Date: 03/22/07

GENERAL NOTES:

1. THE COMPONENTS & CLADDING DESIGNS, INCLUDED HEREIN ARE FLORIDA BUILDING CODE (FBC) 2004, COMPLIANT .
2. DESIGN CRITERIA FOR ALUMINUM, MINIMUM MECHANICAL PROPERTIES, AND SAFETY FACTORS ARE IN ACCORDANCE WITH THE "ALUMINUM DESIGN MANUAL" PER FBC REFERENCE.
3. ALUMINUM ALLOYS: ALL EXTRUSIONS SHALL BE ALLOY AS NOTED.
4. STEEL SURFACES TO BE PLACED IN CONTACT WITH ALUMINUM SHALL BE GIVEN ONE COAT OF ZINC CHROMATE PRIMER IN ACCORDANCE WITH FEDERAL SPEC. NO. TTP-645, OR BE GALVANIZED.
5. ANCHORS SHALL BE AS LISTED, AND SPACED AS SHOWN ON DETAILS. ANCHOR EMBEDMENT TO BASE MATERIAL SHALL BE BEYOND WALL DRESSING OR STUCCO.
6. ALL BOLTS, NUTS, AND WASHERS SHALL BE STAINLESS STEEL OR ALUMINUM ALLOY 2024-T4 OR 7075-T6, OR PLATED STEEL.
7. ELECTRICAL CERTIFICATION PER UL LISTING - FILE E219544.
8. DESIGN CRITERIA: FOR MULTIPLE SPANS, THE COMBINED MAX DEFLECTION OF HEADER & STORM BARS IS 2". FOR MULLIONS MAX DEFLECTION < L/180.
9. ANCHORING OR LOADING CONDITIONS OTHER THAN THOSE SHOWN IN THESE DETAILS ARE NOT PART OF THIS APPROVAL.
10. ALTERATIONS OR ADDITIONS TO THE DOCUMENT ARE NOT PERMITTED. DOCUMENT SHALL BEAR THE ORIGINAL SEAL, SIGNATURE (IN RED), AND DATE OF THE PROFESSIONAL ENGINEER LISTED.
11. THIS PRODUCT APPROVAL DOCUMENT IS SUITABLE FOR USE ONLY AS SPECIFICALLY STATED ON THE COMBINED PAGES OF THE ENTIRE DOCUMENT. ANY DEVIATIONS SHALL BE REVIEWED AND APPROVED SEPARATELY.

DESIGN LOADS SHALL BE CALCULATED AS PER REQUIREMENTS OF ASCE 7-98 & FBC EXCEPTIONS.

PRODUCT MARKING

A LABEL SHALL BE AFFIXED ON UNIT AT RIGHT BOTTOM OF BOX WITH THE FOLLOWING STATEMENT:

"ROLL-A-WAY STORM AND SECURITY SHUTTERS, ST. PETERSBURG, FL. DADE COUNTY PRODUCT CONTROL APPROVED"

HURRICANE ROLL SHUTTER

HIGH VELOCITY HURRICANE ZONE

PRODUCT APPROVAL

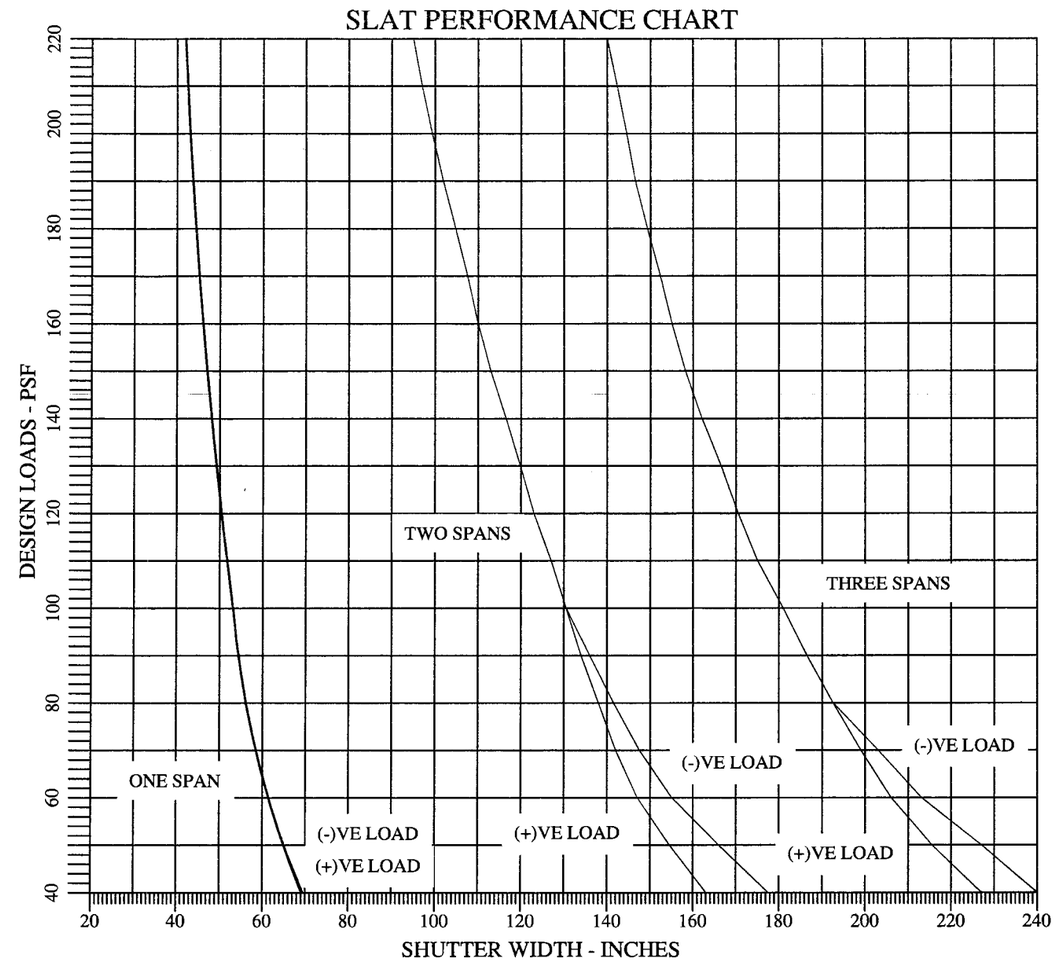

PRODUCT REVISED
as complying with the Florida Building Code
Acceptance No. 05-0725.13
Expiration Date: 07/15/2007
By M Thach
Miami Dade Product Control Division

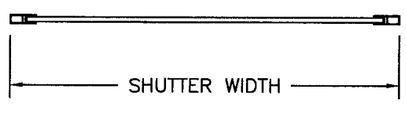

ONE SPAN

PLAN VIEW

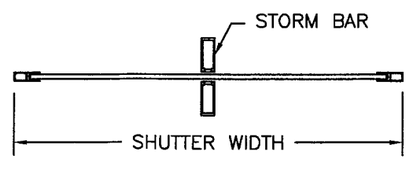

TWO SPANS

PLAN VIEW

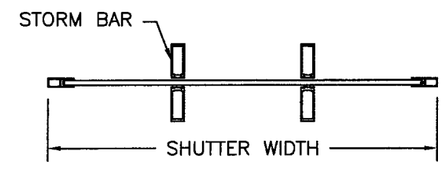

THREE SPANS

PLAN VIEW

Roll-a-way STORM AND SECURITY SHUTTERS
10601 OAK STREET N.E.
ST. PETERSBURG, FL 33716

COPYRIGHT © 2002
VALCO ENTERPRISES, LTD.

DRAWING TITLE:

US60 DADE COUNTY
PRODUCT APPROVAL

D.L. Fowler
Professional Engineer
Florida License No.
PE0050458

7-12-05

DRAWN:	DJN
DATE:	03-15-02
APPROVED:	DF
DATE:	1-8-02
DRAWING NO:	3-01-024
SIZE: B	REV: -
SCALE:	3/8" = 1'-0"
SHEET:	1 OF 19

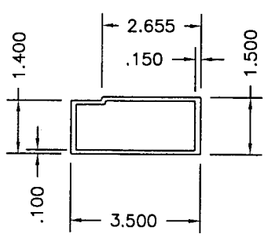

HEADER TUBE TYPE "1"
ALUMINUM 6005-T5

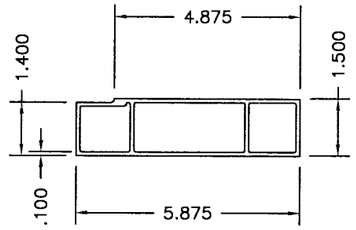

HEADER TUBE TYPE "2"
ALUMINUM 6005-T5

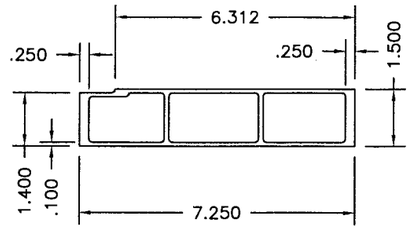

HEADER TUBE TYPE "3"
ALUMINUM 6005-T5

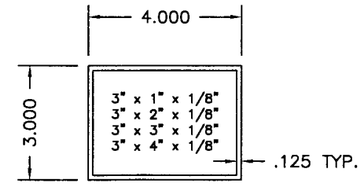

BUILT-OUT TUBES
ALUMINUM 6005-T5 & 6063-T6

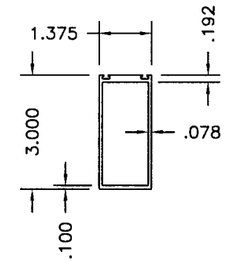

3" STORM BAR
ALUMINUM 6005-T5

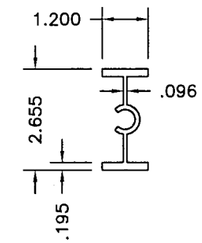

3" STORM BAR INSERT
ALUMINUM 6005-T5

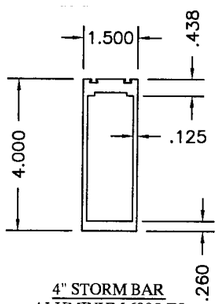

4" STORM BAR
ALUMINUM 6005-T5

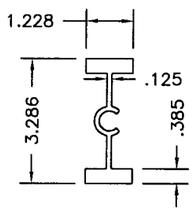

4" STORM BAR INSERT
ALUMINUM 6005-T5

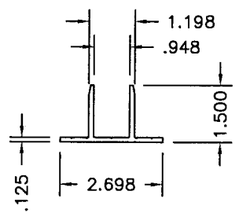

3" STORM BAR BRACKET
ALUMINUM 6005-T5

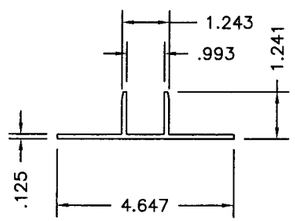

4" STORM BAR BRACKET
ALUMINUM 6005-T5

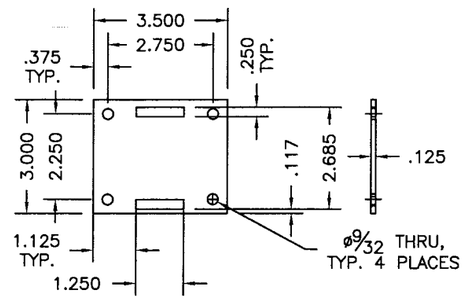

3" REMOVABLE STORM BAR BASE
ALUMINUM 6061-T6

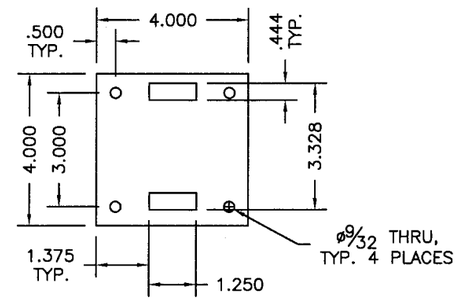

4" REMOVABLE STORM BAR BASE
ALUMINUM 6061-T6

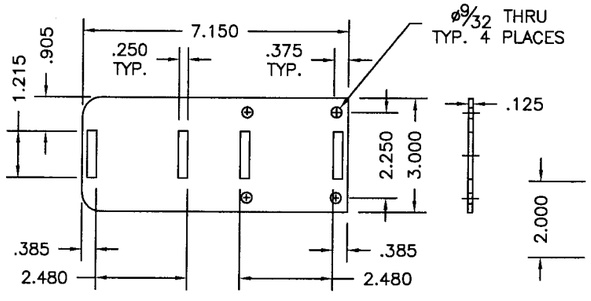

3" REMOVABLE STORM BAR BASE, EXTENDED
ALUMINUM 6061-T6 OR 6005-T5

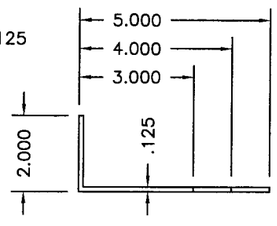

ALUMINUM ANGLE
ALUMINUM 6063-T5

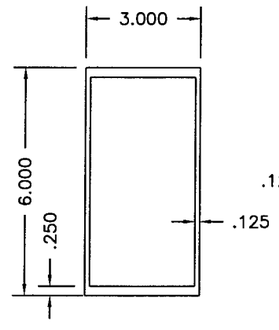

3" x 6" MULLION
ALUMINUM 6005-T5

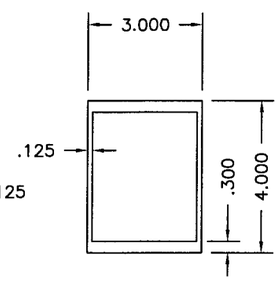

3" x 4" MULLION
ALUMINUM 6005-T5

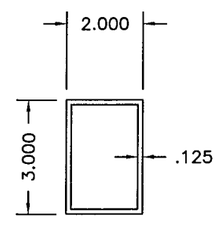

2" x 3" MULLION
ALUMINUM 6005-T5

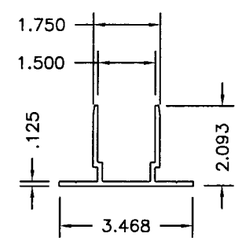

2" MULLION BRACKET
ALUMINUM 6005-T5

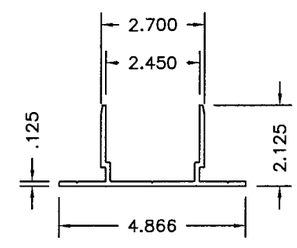

3" MULLION BRACKET
ALUMINUM 6005-T5

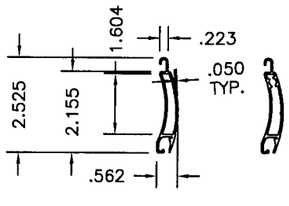

EXTRUDED ALUMINUM SLAT
ALUMINUM 6063-T6

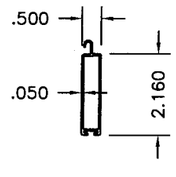

EXTRUDED ALUMINUM
BOTTOM SLAT
ALUMINUM 6063-T6

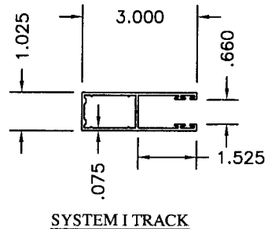

SYSTEM I TRACK
ALUMINUM 6063-T6

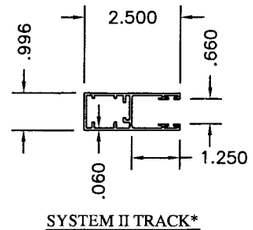

SYSTEM II TRACK*
ALUMINUM 6063-T6

* THIS ALTERNATE TRACK MAY ONLY BE USED AT SLAT PERFORMANCE CHART DESIGN LOADS MULTIPLYED BY 90% OR 0.9 TO REDUCE ALLOWABLE LOADING.

05-0725.13
07/15/2007

Roll-a-way® STORM AND SECURITY SHUTTERS
10601 OAK STREET N.E.
ST. PETERSBURG, FL 33716
COPYRIGHT © 2002
VALCO ENTERPRISES, LTD.

DRAWING TITLE:
US60 DADE COUNTY
PRODUCT APPROVAL

D.L. Fowler
Professional Engineer
Florida License No.
PE0050458

7-12-05

DRAWN:	DJN
DATE:	03-15-02
APPROVED:	LJ
DATE:	7-5-05
DRAWING NO:	3-01-024
SIZE: B	REV: -
SCALE:	3/8" = 1'-0"
SHEET:	2 OF 19

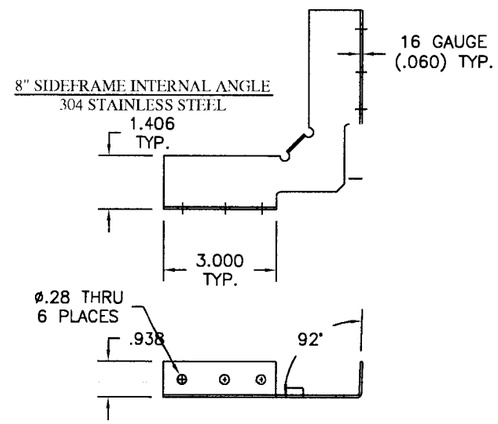

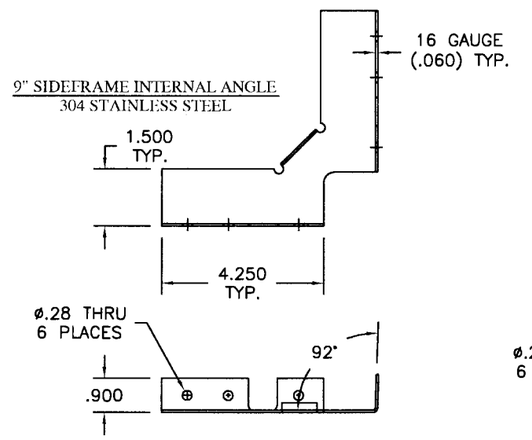

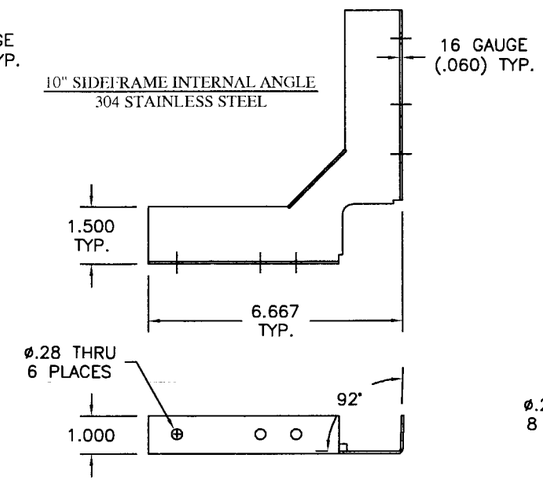

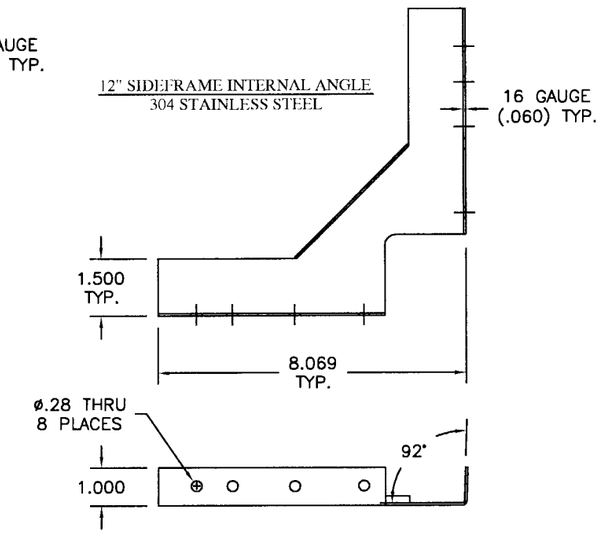

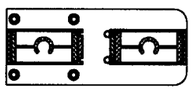

3" SPRING-LOADED STORM BAR TO BUILD-OUT TUBE

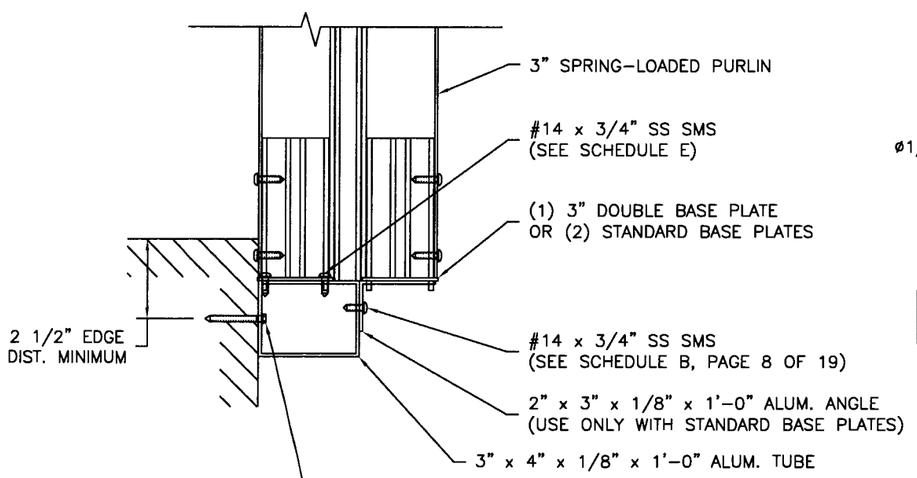

STORM BAR CONNECTION TO BUILD-OUT TUBE

Ⓐ ANCHOR
MINIMUM (4) 1/4" TAPCONS @ 2 1/2" O.C. FOR A MAXIMUM TENSION IN CONCRETE OF 966 LBS.

Ⓐ ANCHOR
MINIMUM (6) 1/4" TAPCONS @ 2 1/2" O.C. FOR A MAXIMUM TENSION IN CONCRETE BLOCKS OF 655 LBS.

Ⓔ ANCHOR
MINIMUM (4) 1/4" LAG SCREWS @ 2" O.C. FOR A MAXIMUM TENSION IN WOOD 600 LBS.

4" SPRING-LOADED STORM BAR ASSEMBLY
SCALE: 1:4

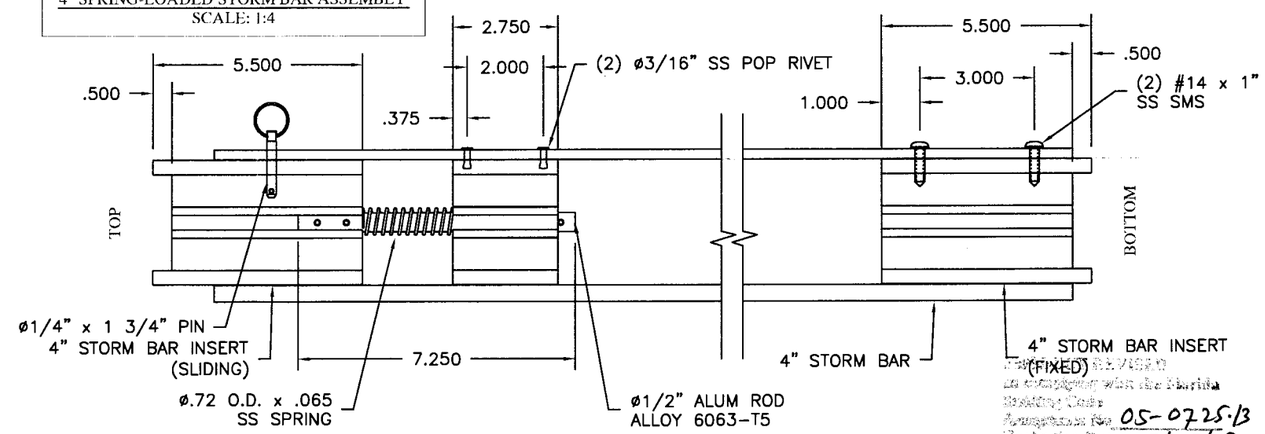

3" SPRING-LOADED STORM BAR ASSEMBLY
SCALE: 1:4

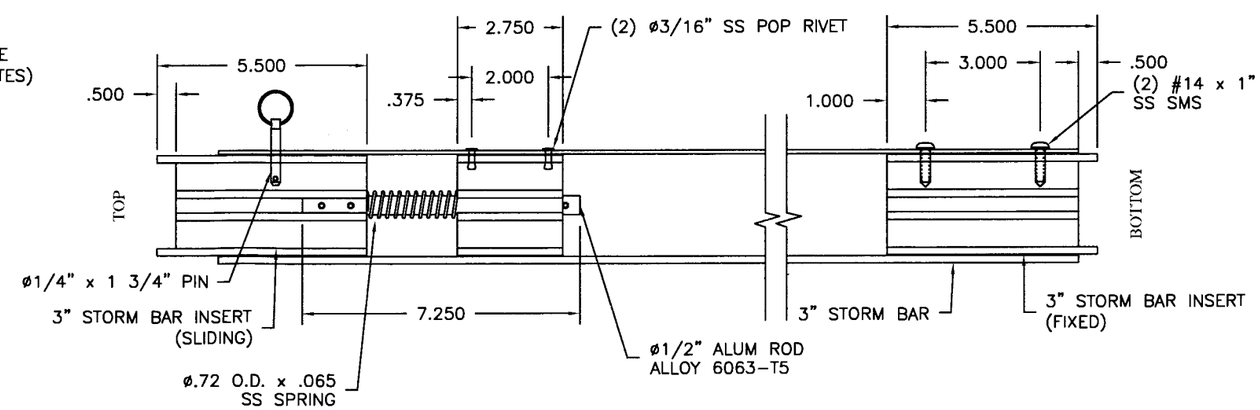

Roll-a-way® STORM AND SECURITY SHUTTERS
10601 OAK STREET N.E.
ST. PETERSBURG, FL 33716
COPYRIGHT © 2002
VALCO ENTERPRISES, LTD.

DRAWING TITLE:
US60 DADE COUNTY
PRODUCT APPROVAL

D.L. Fowler
Professional Engineer
Florida License No.
PE0050458

7-12-05

DRAWN:	DJN
DATE:	03-15-02
APPROVED:	DF
DATE:	7-6-05
DRAWING NO:	3-01-024
SIZE: B	REV: -
SCALE:	3/8" = 1'-0"
SHEET:	3 OF 19

3" SPRING-LOADED STORM BAR ASSEMBLY DETAIL

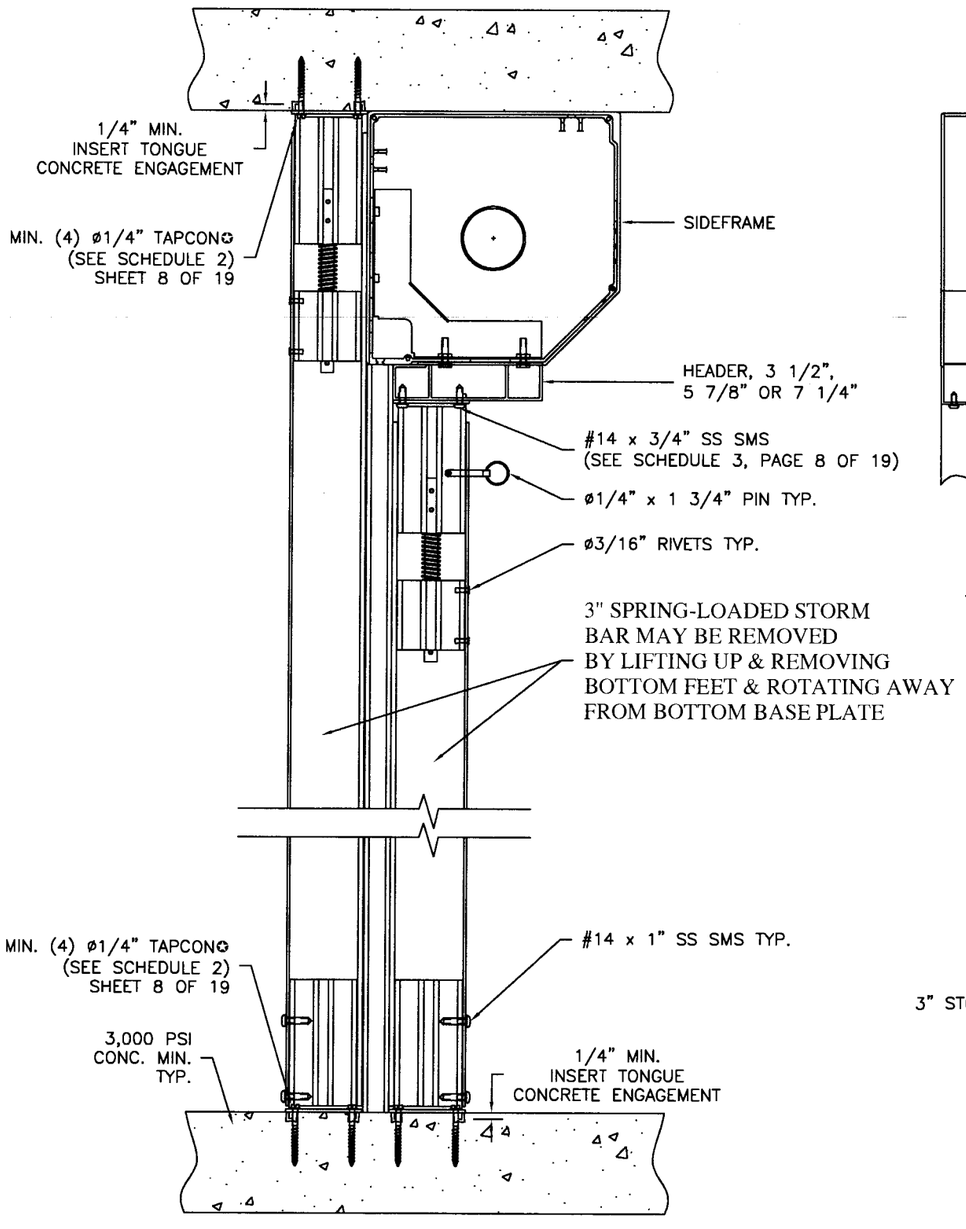

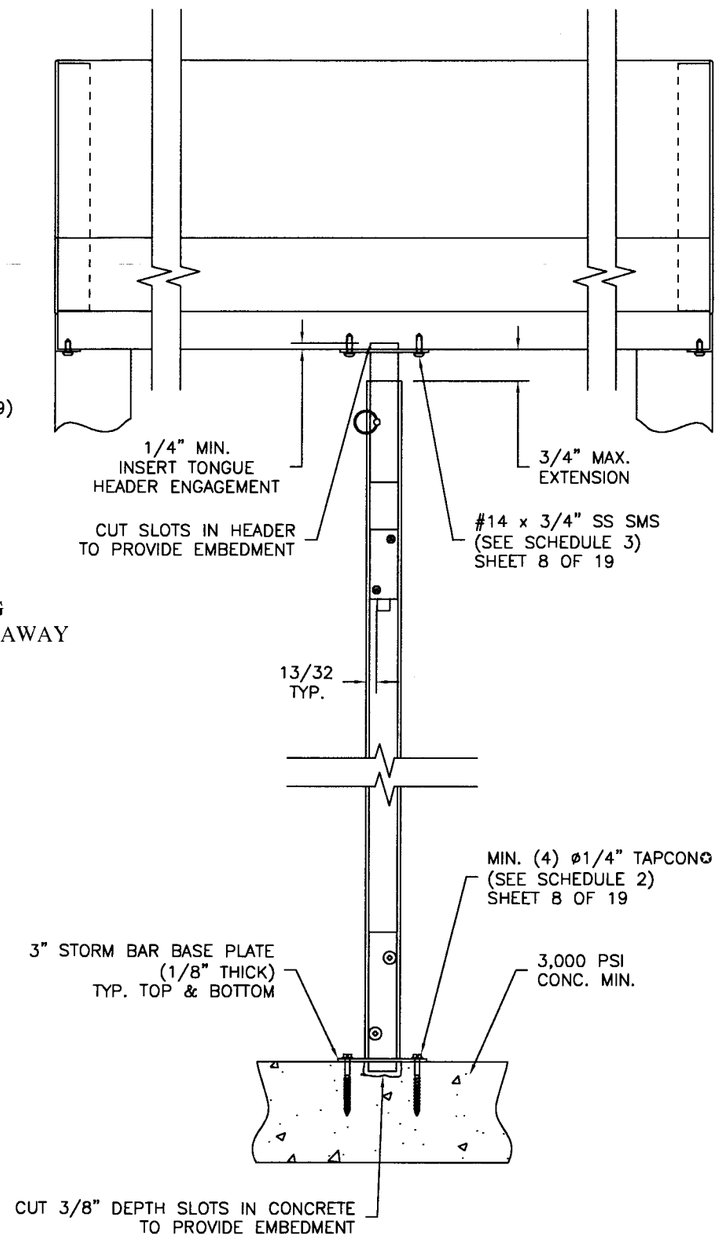

NOTES:
1. SEE PAGES 16 THRU 19 FOR ALLOWABLE SPANS.
2. ADHESIVE WARNING LABELS SHALL BE PLACED ON THE BOTTOM SIDE OF HEADER WITHIN 6" OF STORM BAR.

✪ (4) TAPCONS AS ANCHORS ARE LIMITED TO A SHEAR REACTION OF 1932 LBS..

Roll-a-way® STORM AND SECURITY SHUTTERS
10601 OAK STREET N.E.
ST. PETERSBURG, FL 33716

COPYRIGHT © 2002
VALCO ENTERPRISES, LTD.

DRAWING TITLE:
US60 DADE COUNTY
PRODUCT APPROVAL

D.L. Fowler
Professional Engineer
Florida License No.
PE0050458

7-12-05

05-0725.13
07/15/07
Dade Product Control

DRAWN:	DJN
DATE:	03-15-02
APPROVED:	DF
DATE:	7-6-05
DRAWING NO:	3-01-024
SIZE: B	REV: -
SCALE:	1"= 6"
SHEET:	4 OF 19

4" SPRING-LOADED STORM BAR
ASSEMBLY DETAIL

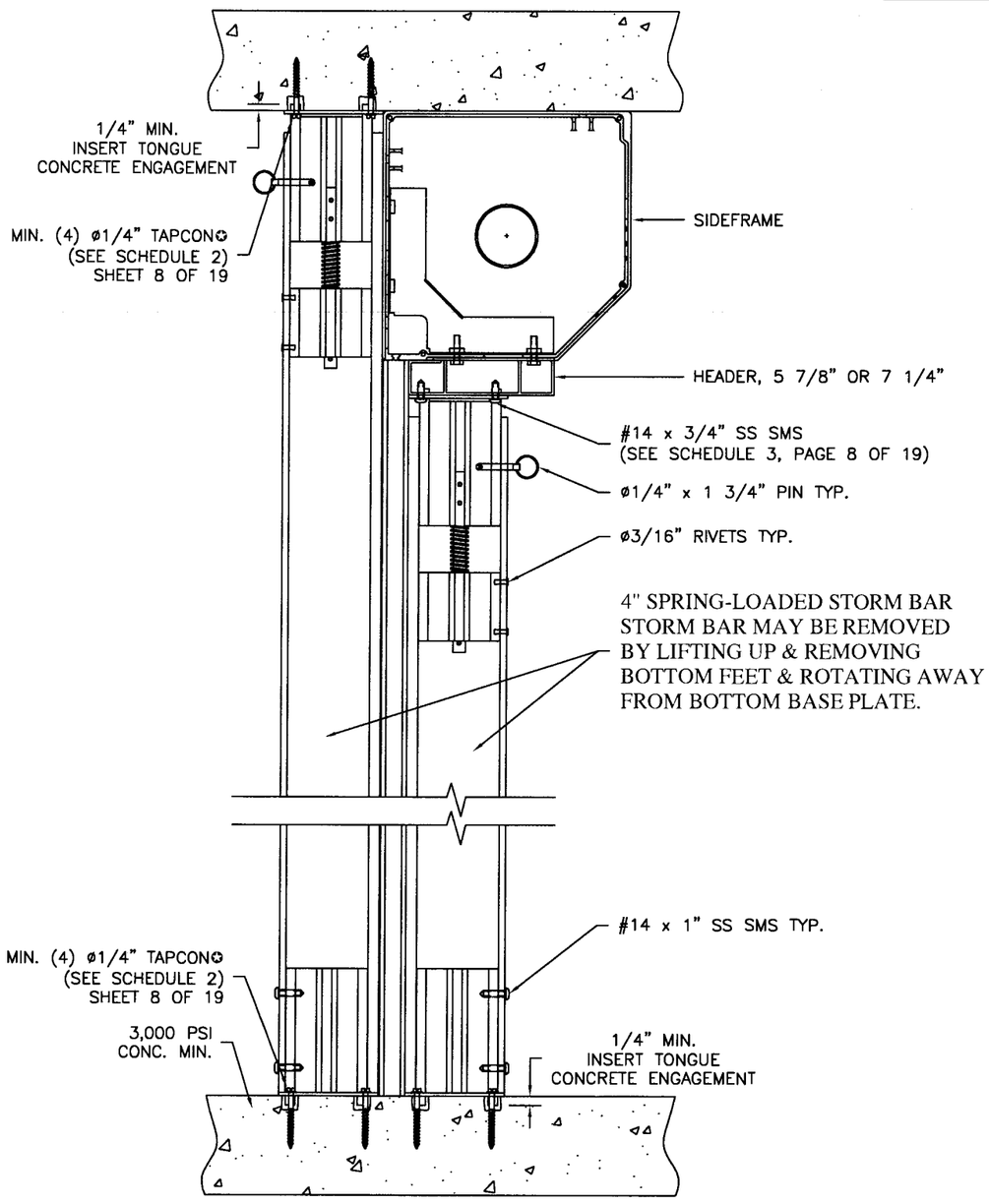

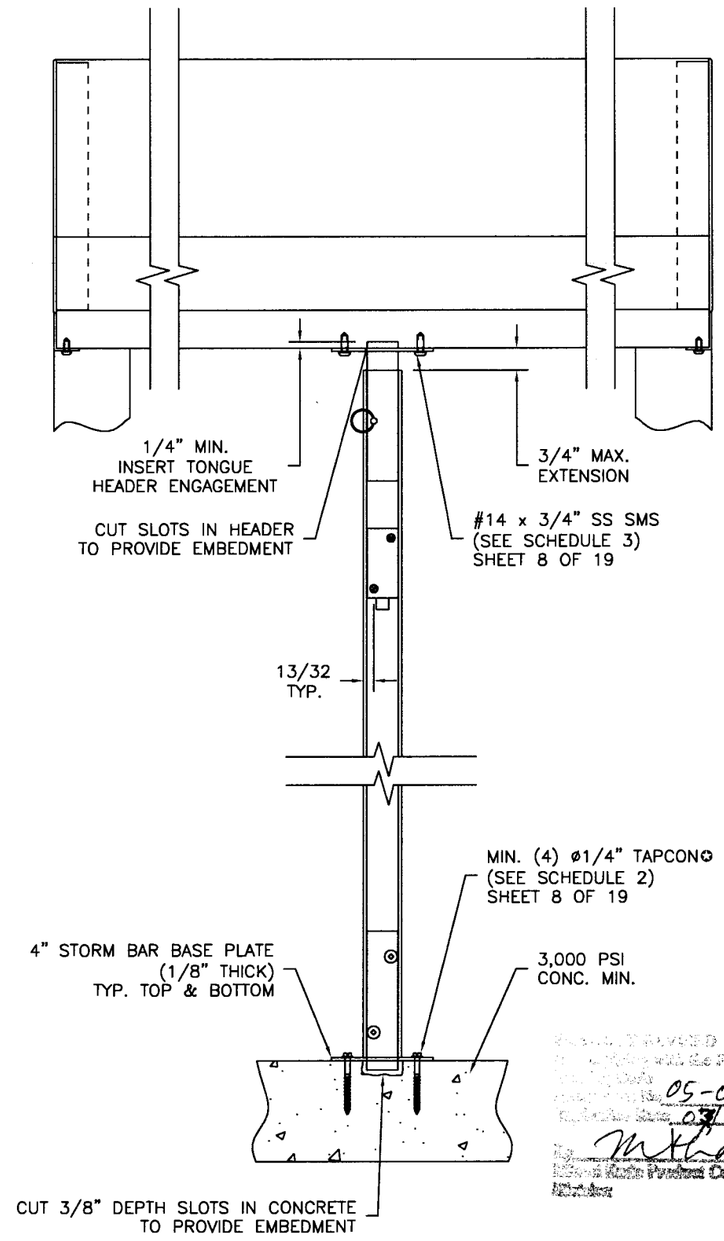

NOTES:
1. SEE PAGES 16 THRU 19 FOR ALLOWABLE SPANS.
2. ADHESIVE WARNING LABELS SHALL BE PLACED ON THE BOTTOM SIDE OF HEADER WITHIN 6" OF STORM BAR.

✪ (4) TAPCONS AS ANCHORS ARE LIMITED TO A SHEAR REACTION OF 1932 LBS..

Roll-a-way® STORM AND SECURITY SHUTTERS
10601 OAK STREET N.E.
ST. PETERSBURG, FL 33716

COPYRIGHT © 2002
VALCO ENTERPRISES, LTD.

DRAWING TITLE:
US60 DADE COUNTY
PRODUCT APPROVAL

D.L. Fowler
Professional Engineer
Florida License No.
PE0050458
7-12-05

05-0725-13
03/15/2007
Product Control

DRAWN:	DJN
DATE:	03-15-02
APPROVED:	
DATE:	7-6-05
DRAWING NO:	3-01-024
SIZE: B	REV: -
SCALE:	1" = 6"
SHEET:	5 OF 19

WALL MOUNTS

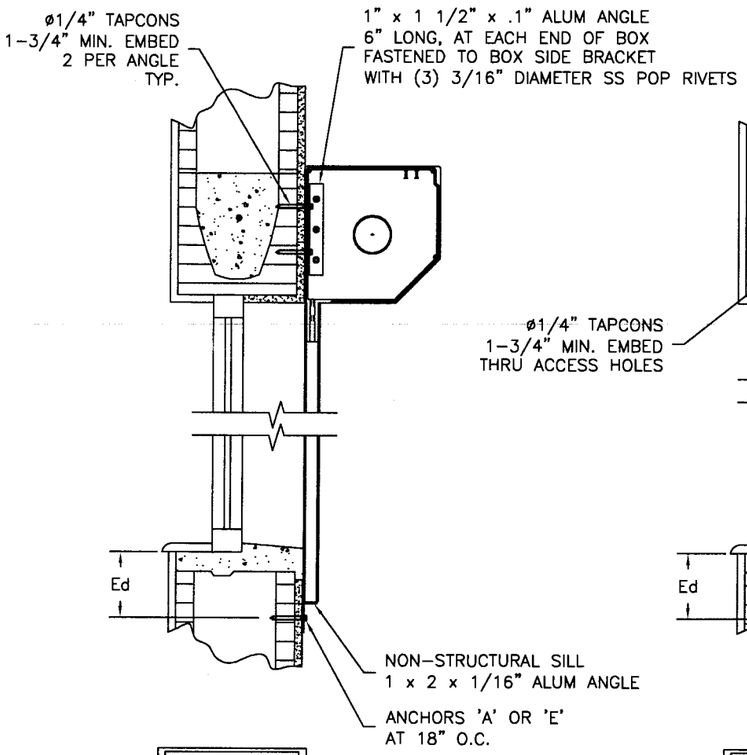

SECTION A-A
SCALE: 1:10

BUILT-OUT CONDITION

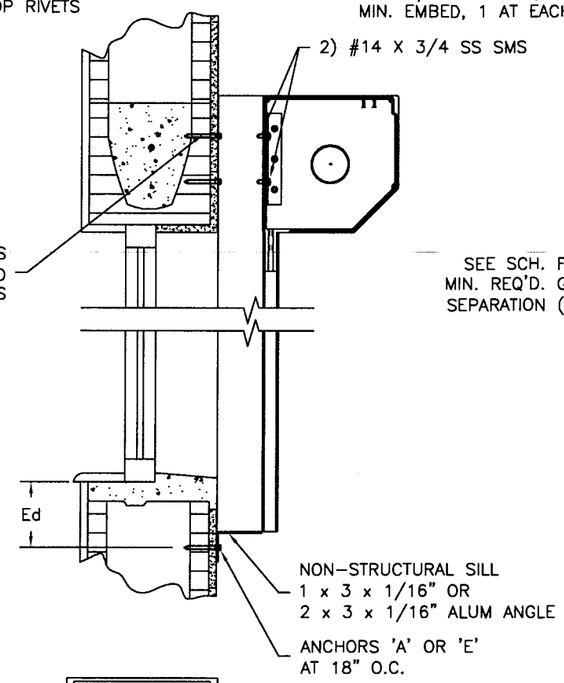

SECTION B-B
SCALE: 1:10

INSIDE MOUNTS

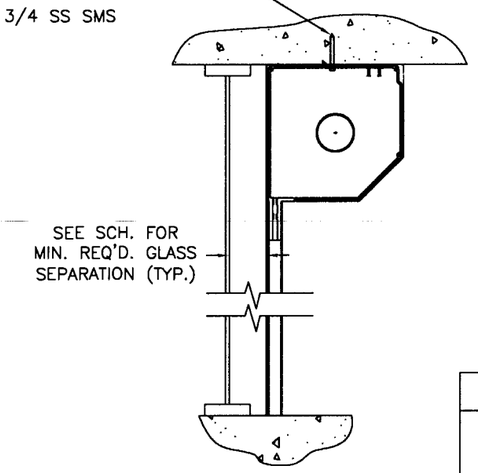

SECTION C-C
SCALE: 1:10

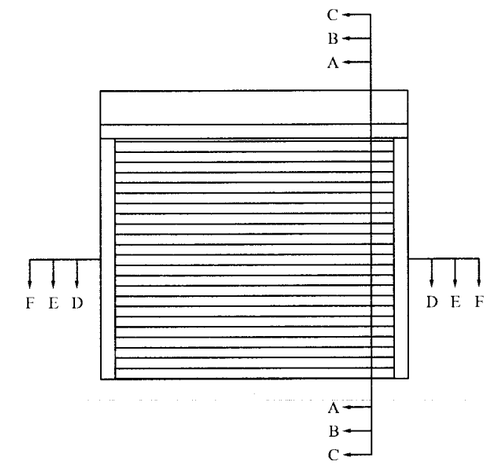

TYPICAL ELEVATION
SINGLE SPAN

MINIMUM SEPARATION REQ'D. FROM GLASS	
FOR INSTALLATIONS ABOVE 30 FT. OF GRADE DUE TO WIND LOAD	FOR INSTALLATIONS UP TO 30 FT. ABOVE GRADE DUE TO LARGE MISSILE IMPACT
3"	3-3/4"
NOTE: IF ANY PART OF THE SHUTTER IS LESS THAN 30' ABOVE GRADE LARGE MISSILE IMPACT REQUIREMENTS PREVAIL FOR THE ENTIRE SHUTTER	

Ed = TYPICAL EDGE DISTANCE
CONC. & BLOCK = 12d (12 ANCHOR DIAMETERS)
WOOD = 5d

ANCHORS: EMBEDMENT & EDGE DISTANCES SHOWN ARE BEYOND THE WALL & FLOOR COVERING (STUCCO, TILES, ETC.)

ANCHOR TYPE	CHART #, PG 10 OF 19		
	CONC.	BLOCK	WOOD
A	3	1	–
E	–	–	4

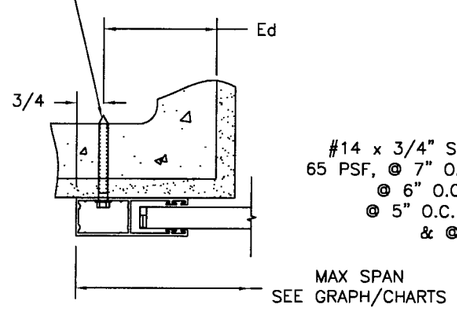

SECTION D-D
SCALE: 1:4

ANCHOR TYPE	CHART#, PG 10 OF 19		
	CONC.	BLOCK	WOOD
A	5	3	–
E	–	–	3

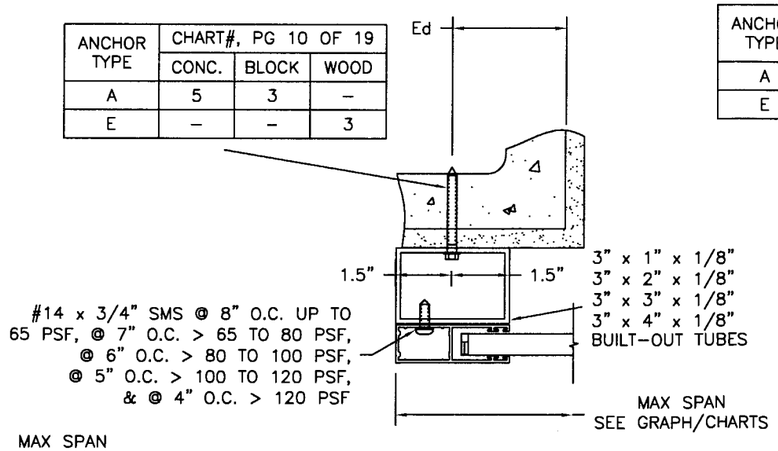

SECTION E-E
SCALE: 1:4

ANCHOR TYPE	CHART#, PG 10 OF 19		
	CONC.	BLOCK	WOOD
A	2	1	–
E	–	–	4

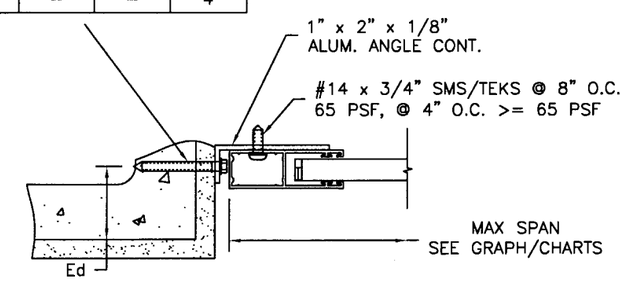

SECTION F-F
SCALE: 1:4

TYPICAL SLAT ENGAGEMENT
INSIDE 3" TRACK = 1 – 1/4" MIN.
INSIDE 2 1/2" TRACK = 1" MIN.

05-0725.13
07/15/2007

Roll-a-way® STORM AND SECURITY SHUTTERS
10601 OAK STREET N.E.
ST. PETERSBURG, FL 33716
COPYRIGHT © 2002
VALCO ENTERPRISES, LTD.

DRAWING TITLE:
US60 DADE COUNTY
PRODUCT APPROVAL

D.L. Fowler
Professional Engineer
Florida License No.
PE0050458

7-12-05

DRAWN:	DJN
DATE:	03-15-02
APPROVED:	DF
DATE:	7-6-05
DRAWING NO:	3-01-024
SIZE: B	REV: -
SCALE:	3/8" = 1'-0"
SHEET:	6 OF 19

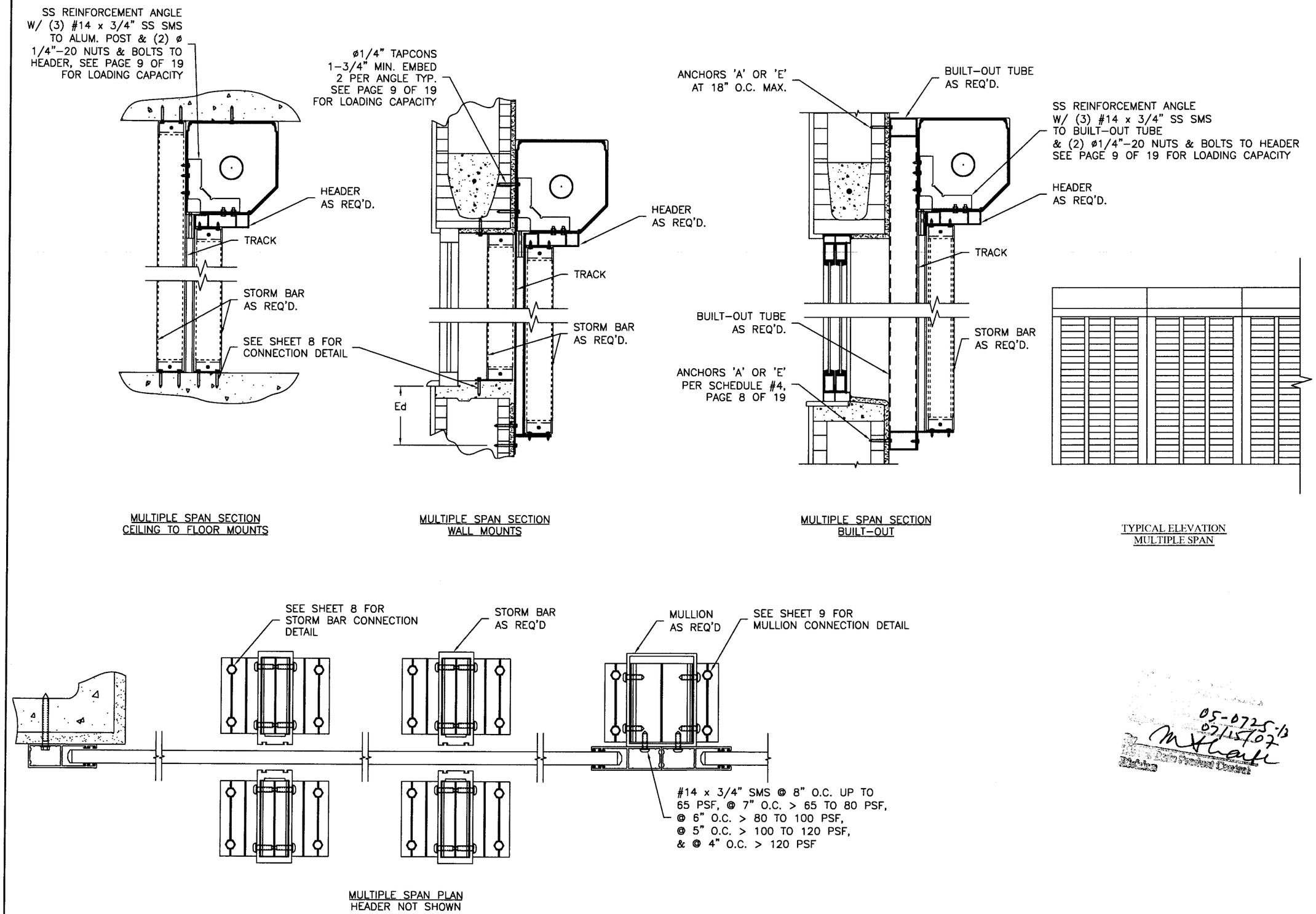

MULTIPLE SPAN SECTION
CEILING TO FLOOR MOUNTS

MULTIPLE SPAN SECTION
WALL MOUNTS

MULTIPLE SPAN SECTION
BUILT-OUT

TYPICAL ELEVATION
MULTIPLE SPAN

MULTIPLE SPAN PLAN
HEADER NOT SHOWN

05-0725-13
07/15/07

Roll-a-way®
STORM AND SECURITY SHUTTERS
10601 OAK STREET N.E.
ST. PETERSBURG, FL 33716

COPYRIGHT © 2002
VALCO ENTERPRISES, LTD.

DRAWING TITLE:
US60 DADE COUNTY
PRODUCT APPROVAL

D.L. Fowler
Professional Engineer
Florida License No.
PE0050458

7-12-05

DRAWN:	DJN
DATE:	03-15-02
APPROVED:	DF
DATE:	7-6-05
DRAWING NO:	3-01-024
SIZE: B	REV: -
SCALE:	3/8" = 1'-0"
SHEET:	7 OF 19

ALL DIMENSIONS SHOWN Sb, Sw, Sb ETC. ARE IN INCHES.

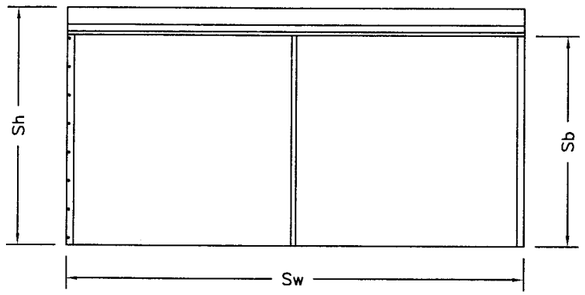

FACTOR = 1.25 FOR 2 SPANS
= 1.10 FOR 3 SPANS
Sb = STORM BAR HEIGHT

LOAD ON STORM BAR ANCHOR: $P = \frac{Sw \times Sb \times PSF/144 \times FACTOR}{2 \times (\#\ OF\ SPANS)}$

IF P > CAPACITY OF FASTENERS SHOWN, ANCHORAGE SYSTEM SHALL BE DESIGNED ON JOB TO JOB BASIS.

2 SPAN LOADING OVER 2070 LBS AND 3 SPAN LOADING OVER 1035 LBS SHALL REQUIRE DOUBLE SS SIDEFRAME BRACKETS.

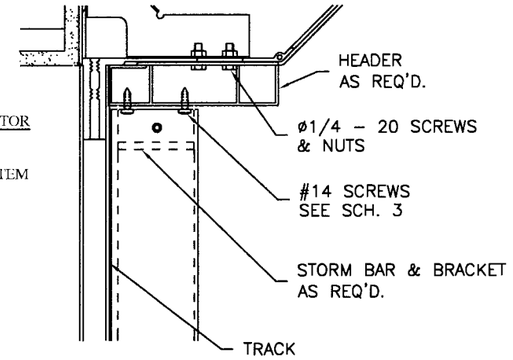

STORM BAR CONNECTION TO HEADER

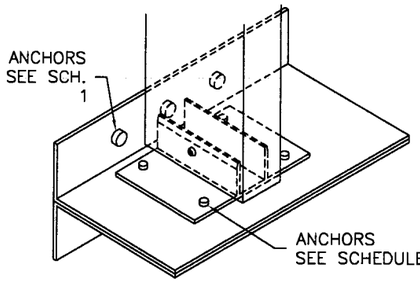

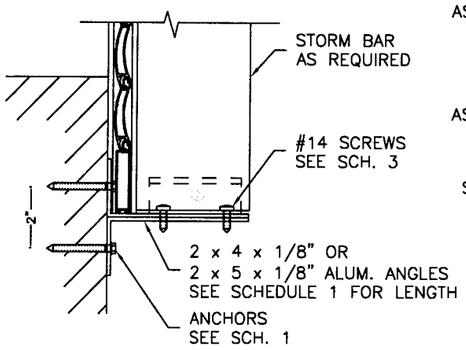

STORM BAR CONNECTION TO WALL (TOP & BOTTOM)

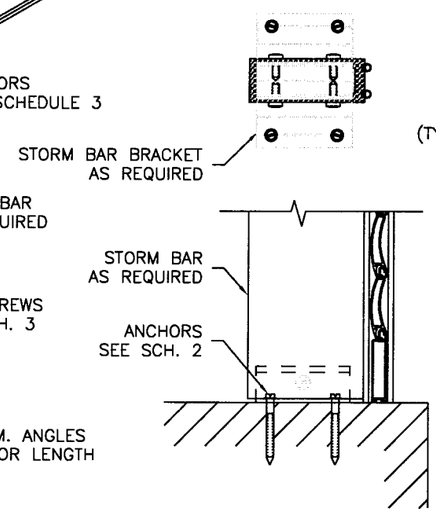

STORM BAR CONNECTION TO CEILING & FLOOR

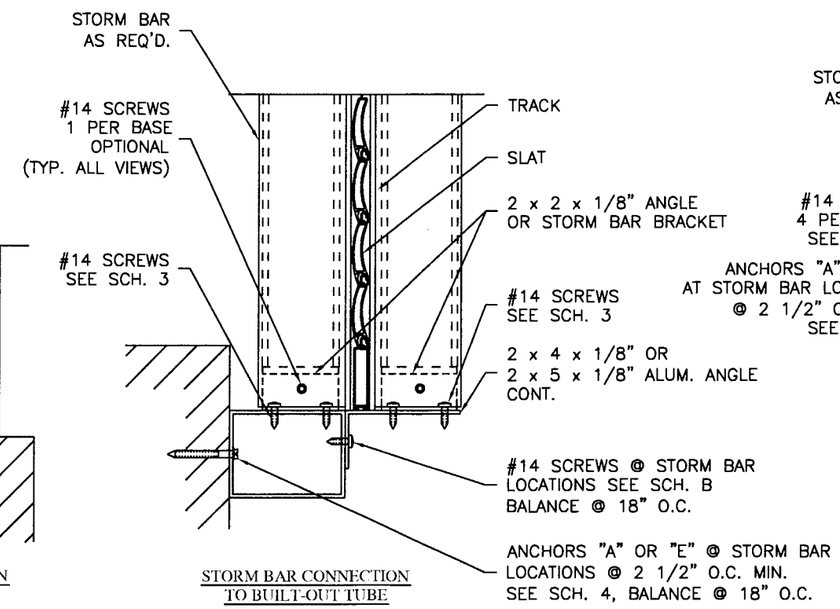

STORM BAR CONNECTION TO BUILT-OUT TUBE

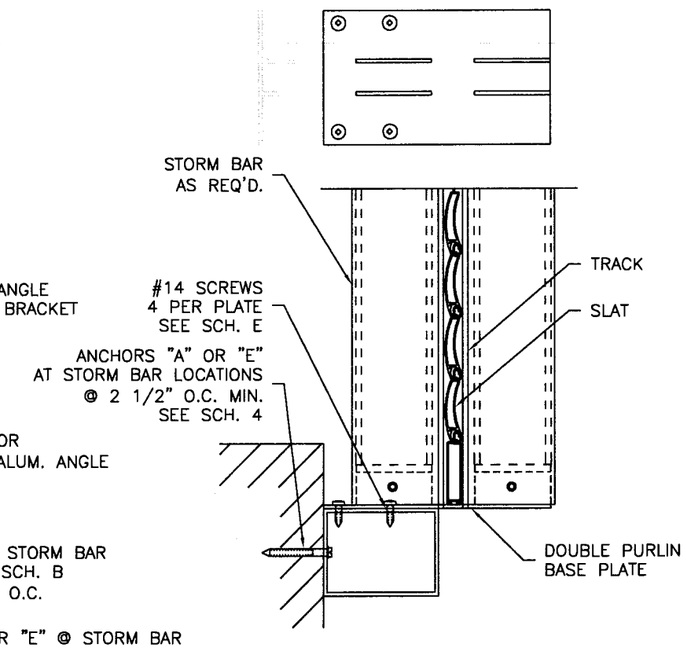

ALT. STORM BAR CONNECTION TO BUILT-OUT TUBE

SCHEDULE 1

STORM BAR CONNECTION TO WALL				
ALUM. ANGLE LENGTH IN.	NO. OF ANCHORS PER CONNECTION	ANCHOR TYPE	BASE MATERIAL	CONNECTION CAPACITY–lbs
4	2	A	CONC.	773
		A	BLOCK	352
		E	WOOD	600
6	4	A	CONC.	1546
		A	BLOCK	704
		E	WOOD	1200
8	6	A	CONC.	2319
		A	BLOCK	1056
		E	WOOD	1800
10	8	A	CONC.	3092
		A	BLOCK	1408
		E	WOOD	2400
12	10	A	CONC.	3865
		A	BLOCK	1760
		E	WOOD	3000

SCHEDULE 2

STORM BAR CONNECTION TO CEILING AND FLOOR			
ANCHOR PER SIDE	ANCHOR TYPE	BASE MATERIAL	CONNECTION CAPACITY–lbs
1	A	CONC.	950
	A	BLOCK	796
	E	WOOD	616
2	A	CONC.	1520
	A	BLOCK	1274
	E	WOOD	1232
3	N/A	–	–
	N/A	–	–
	E	WOOD	1848
4	N/A	–	–
	N/A	–	–
	E	WOOD	2464
5	N/A	–	–
	N/A	–	–
	E	WOOD	3080

SCHEDULE B

SINGLE CONNECTION TO TUBE AT STORM BAR LOCATION	
# OF SCREWS	CONNECTION CAPACITY–lbs
2	400
3	600
4	800

SCHEDULE E

BASE PLATE ANCHOR CAPACITY	
NO. OF SCREWS PER PLATE	CONNECTION CAPACITY–lbs
4	2068

SCHEDULE 3

STORM BAR BRACKET CONNECTION		
STORM BAR SIZE	# OF SCREWS EACH LEG	CONNECTION CAPACITY–lbs
3" BASE PLATE OR 4" BASE PLATE	1	1034
	2	2068
	3	3102
	4	4136

SCHEDULE 4

TUBE CONNECTION TO WALL @ STORM BAR LOCATION			
NO. OF ANCHOR	ANCHOR TYPE	BASE MATERIAL	CONNECTION CAPACITY–lbs
2	A	CONC.	408
	A	BLOCK	220
	E	WOOD	300
3	A	CONC.	612
	A	BLOCK	330
	E	WOOD	450
4	A	CONC.	816
	A	BLOCK	440
	E	WOOD	600
5	A	CONC.	1020
	A	BLOCK	550
	E	WOOD	750

PRODUCT REVIEWED
Miami-Dade Co. Florida
Product Control No. 05-0725.13
Date 07/15/07
By M Thanh
Miami Dade Product Control Division

Roll-a-way®
STORM AND SECURITY SHUTTERS
10601 OAK STREET N.E.
ST. PETERSBURG, FL 33716

COPYRIGHT © 2002
VALCO ENTERPRISES, LTD.

DRAWING TITLE:

US60 DADE COUNTY PRODUCT APPROVAL

D.L. Fowler
Professional Engineer
Florida License No.
PE0050458

7-12-05

DRAWN:	P4
DATE:	3-26-03
APPROVED:	DF
DATE:	7-6-05
DRAWING NO:	
SIZE: B	REV: -
SCALE:	NTS
SHEET:	8 OF 19

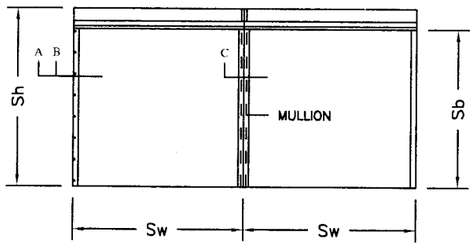

CENTER MULLION ANCHOR LOAD - NO STORM BAR
BOTTOM or TOP LOAD = (Sh x Sw x PSF x 0.0034722) = Lbs

CENTER MULLION ANCHOR LOAD - 2 SPAN
BOTTOM LOAD = (Sh x Sw x PSF x 0.001302) + (.15 x HL) = Lbs
TOP LOAD = (Sh x Sw x PSF x 0.001302) + (2 x HL) = Lbs

END MULLION ANCHOR LOAD - NO STORM BAR
BOTTOM or TOP LOAD = (Sh x Sw x PSF x 0.0017361)= Lbs

END MULLION ANCHOR LOAD - 2 SPAN
BOTTOM LOAD = (Sh x Sw x PSF x 0.000651) + (.15 x HL)= Lbs
TOP LOAD = (Sh x Sw x PSF X 0.000651) + HL = Lbs

HEADER CONNECTION LOAD - 2 SPAN (LEFT & RIGHT)
HL = (Sh x Sw x PSF x 0.001085) = Lbs

CENTER MULLION ANCHOR LOAD - 3 SPAN
BOTTOM LOAD = (Sh x Sw x PSF x 0.000926) + (.15 x HL3) = Lbs
TOP LOAD = (Sh x Sw x PSF x 0.000926) + (2 x HL3) = Lbs

END MULLION ANCHOR LOAD - 3 SPAN
BOTTOM LOAD = (Sh x Sw x PSF x 0.000463) + (.15 x HL3)= Lbs
TOP LOAD = (Sh x Sw x PSF X 0.000463) + HL3 = Lbs

HEADER CONNECTION LOAD - 3 SPAN (LEFT & RIGHT)
HL3 = (Sh x Sw x PSF x 0.0012731) = Lbs

IF ANY ANCHOR LOAD IS > SCHEDULE ANCHOR CAPACITY OF FASTENER SHOWN, AN ANCHORAGE SYSTEM SHALL BE DESIGNED ON A JOB BY JOB BASIS.

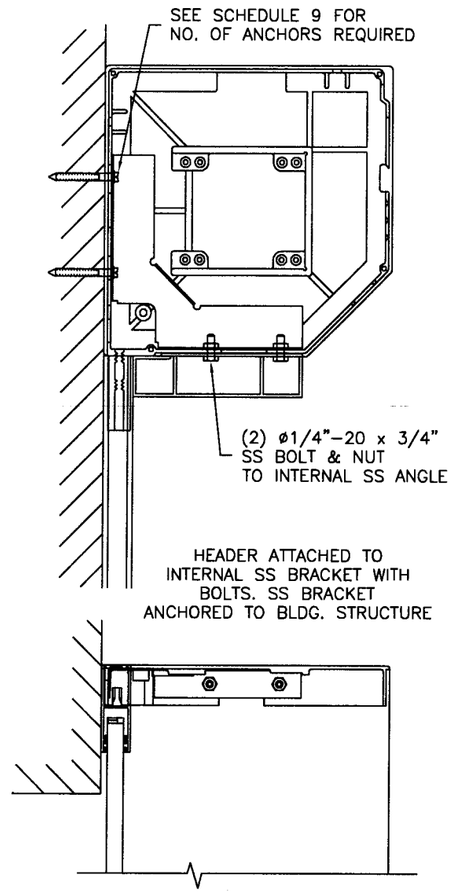

Ⓐ HEADER CONNECTION TO WALL BRACKET ONLY (PLAN VIEW)
UNIT STRENGTH PER SCH. 9

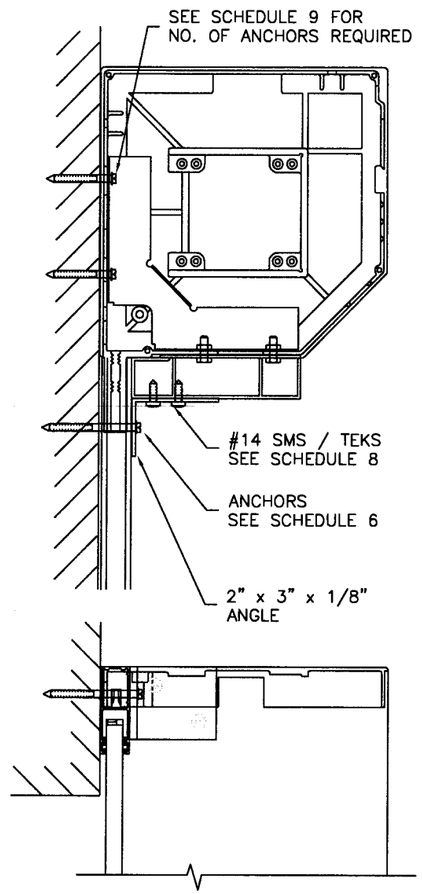

Ⓑ HEADER CONNECTION TO WALL ANGLE & BRACKET (PLAN VIEW)
UNIT STRENGTH = SCH. 9 + SCH. 6

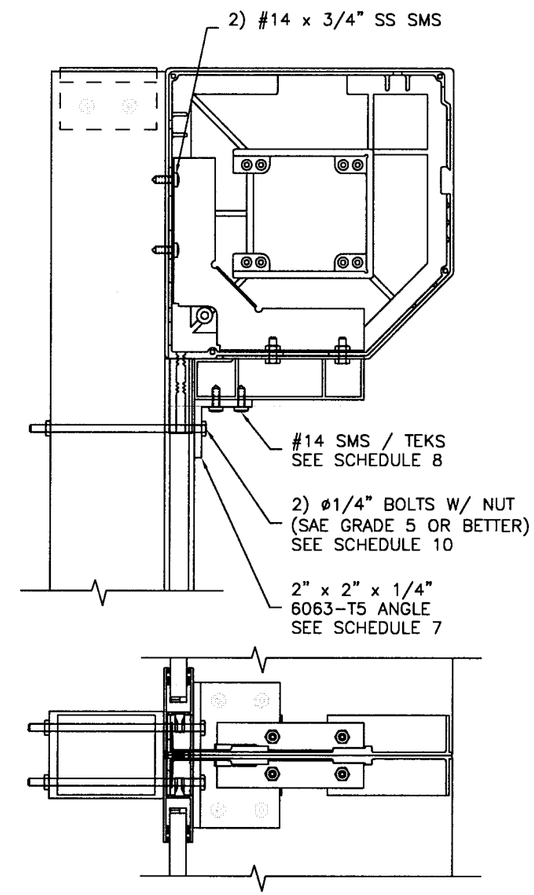

Ⓒ HEADER CONNECTION TO MULLION (PLAN VIEW)
UNIT STRENGTH = SCH. 8 OR 10 + 600 LBS

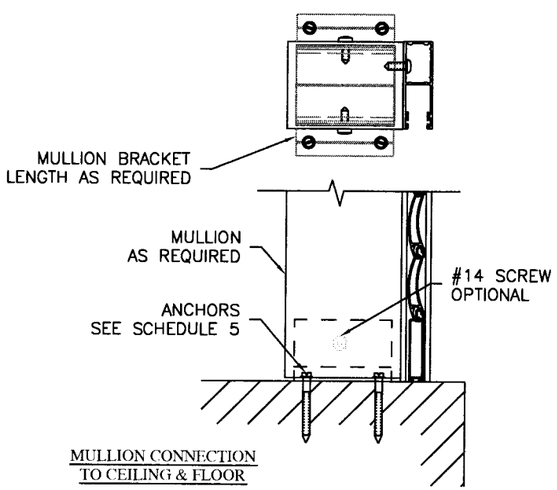

MULLION CONNECTION TO CEILING & FLOOR

SCHEDULE 5

MULLION CONNECTION TO CEILING AND FLOOR			
ANCHOR PER SIDE	ANCHOR TYPE	BASE MATERIAL	CONNECTION CAPACITY-lbs
1	A	CONC.	950
	A	BLOCK	796
	E	WOOD	616
	R	CONC.	3200
2	A	CONC.	1520
	A	BLOCK	1274
	E	WOOD	1232
4	A	CONC.	–
	A	BLOCK	–
	E	WOOD	2464

SCHEDULE 6

HEADER CONNECTION TO WALL				
ALUM. ANGLE LENGTH IN.	NO. OF ANCHORS PER CONNECTION	ANCHOR TYPE	BASE MATERIAL	CONNECTION CAPACITY-lbs
3	1	A	CONC.	483
		A	BLOCK	218
		R	CONC.	1115
	2	E	WOOD	456
6	4	N/A	–	–
		E	WOOD	912
8	6	E	WOOD	1368

SCHEDULE 7

ANGLE CONNECTION TO HEADER		
NO. OF SCREWS	ANGLE LENGTH IN.	CONNECTION CAPACITY-lbs
2	3	1187
3	4	1781
4	6	2374
6	8	3052

SCHEDULE 8

ANGLE CONNECTION TO HEADER		
NO. OF SCREWS	ANGLE LENGTH IN.	CONNECTION CAPACITY-lbs
2	3	1640
4	4	3052

05-0725.13
07/15/07
M Khah
Miami-Dade Product Control
Division

SCHEDULE 10

ANGLE CONNECTION TO MULLION		
NO. OF SCREWS	ANGLE LENGTH IN.	CONNECTION CAPACITY-lbs
2	3	1187
3	4	1781
4	6	2374
6	8	3052

SCHEDULE 9

HEADER/END CASTING CONNECTION TO WALL			
NO. OF ANCHORS	ANCHOR TYPE	BASE MATERIAL	CONNECTION CAPACITY-lbs
1	A	CONC.	724
	A	BLOCK	327
	E	WOOD	300
	R	CONC.	1115
2	A	CONC.	966
	A	BLOCK	436
	E	WOOD	600
3	A	CONC.	–
	A	BLOCK	–
	E	WOOD	750

Roll-a-way®
STORM AND SECURITY SHUTTERS
10601 OAK STREET N.E.
ST. PETERSBURG, FL 33716
COPYRIGHT © 2002
VALCO ENTERPRISES, LTD.

DRAWING TITLE:
US60 DADE COUNTY
PRODUCT APPROVAL

D.L. Fowler
Professional Engineer
Florida License No.
PE0050458

7-12-05

DRAWN:	DF
DATE:	07-07-05
APPROVED:	DF
DATE:	07-08-05
DRAWING NO:	3-01-024
SIZE: B	REV: -
SCALE:	3/8" = 1'-0"
SHEET:	9 OF 19

ANCHOR CHARTS
SLAT WIDTH PERFORMANCE LIMIT PER ANCHOR SPACING

DESIGN LOADS, PSF	ANCHOR CHART 1			ANCHOR CHART 2			ANCHOR CHART 3			ANCHOR CHART 4			ANCHOR CHART 5	
	8" O.C.	6" O.C.	3" O.C.	8" O.C.	6" O.C.	3" O.C.	8" O.C.	6" O.C.	3" O.C.	8" O.C.	6" O.C.	3" O.C.	8" O.C.	6" O.C.
30	37	50	70	70	70	70	70	70	70	51	69	70	70	70
35	32	43	70	70	70	70	70	70	70	44	59	70	70	70
40	28	37	70	62	70	70	70	70	70	39	51	70	70	70
45	25	33	66	55	70	70	70	70	70	34	46	70	70	70
50	22	30	60	50	66	70	70	70	70	31	41	70	70	70
55	20	27	54	45	60	70	70	70	70	28	37	70	70	70
60	N/A	25	50	41	55	70	70	70	70	26	34	69	70	70
65	N/A	23	46	38	51	70	67	70	70	24	32	63	70	70
70	N/A	21	43	36	47	70	62	70	70	22	29	59	70	70
75	N/A	N/A	40	33	44	70	58	70	70	21	27	55	70	70
80	N/A	N/A	37	31	41	70	54	70	70	N/A	26	51	70	70
85	N/A	N/A	35	29	39	70	51	68	70	N/A	24	48	70	70
90	N/A	N/A	33	28	37	70	48	64	70	N/A	23	46	70	70
95	N/A	N/A	31	26	35	70	46	61	70	N/A	22	43	70	70
100	N/A	N/A	30	25	33	66	44	58	70	N/A	21	41	70	70
110	N/A	N/A	27	23	30	60	40	53	70	N/A	N/A	37	70	70
120	N/A	N/A	25	21	28	55	36	48	70	N/A	N/A	34	70	70
130	N/A	N/A	23	N/A	26	51	33	45	70	N/A	N/A	32	67	70
140	N/A	N/A	21	N/A	24	47	31	41	70	N/A	N/A	29	62	70
150	N/A	N/A	N/A	N/A	22	44	29	39	70	N/A	N/A	27	58	70
160	N/A	N/A	N/A	N/A	21	41	27	36	70	N/A	N/A	26	54	70
170	N/A	N/A	N/A	N/A	N/A	39	26	34	68	N/A	N/A	24	51	68
180	N/A	N/A	N/A	N/A	N/A	37	24	32	64	N/A	N/A	23	48	64
190	N/A	N/A	N/A	N/A	N/A	35	23	31	61	N/A	N/A	22	46	61
200	N/A	N/A	N/A	N/A	N/A	33	22	29	58	N/A	N/A	20	44	58
210	N/A	N/A	N/A	N/A	N/A	32	21	28	55	N/A	N/A	N/A	41	55
220	N/A	N/A	N/A	N/A	N/A	30	20	26	53	N/A	N/A	N/A	40	53

SLAT WIDTH = SHUTTER WIDTH/# OF SPANS

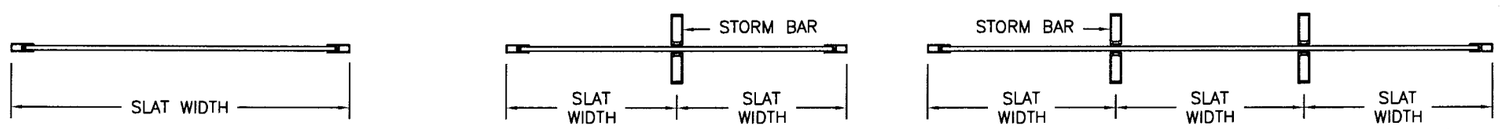

ONE SPAN — TWO SPANS — THREE SPANS

TYPICAL ANCHORS

ANCHOR TYPE "A" = 1/4"Ø TAPCON 1-3/4" EMBEDMENT TO CONCRETE
1-1/4" EMBEDMENT TO BLOCK

ANCHOR TYPE "E" = #14 SMS OR 1/4" Ø LAG SCREWS INTO WOOD. (SG = 0.47)
1-1/2" MIN. PENETRATION

ANCHOR TYPE "R" = 3/8" POWERS FASTENER - POWER BOLT
2" MIN. PENETRATION

NOTE: ANCHORS USE FULL EMBEDMENT IN CONCRETE BEYOND THE COVERING (STUCCO, TILES, ETC.). 2000 PSI CONCRETE MIN.

FASTENER SPACING IN MASONRY

CHARTS ARE BASED ON TYPICAL EDGE DISTANCE = 12d.
FOR LESSER EDGE DISTANCE DECREASE SPACING BY MULTIPLYING WITH THE FACTOR BELOW

EDGE DIST.	12d=3"	10d=2-1/2"	8d=2"	6d=1-1/2"	5d=1-1/4"
FACTOR	1.00	0.86	0.71	0.57	0.50

EXAMPLE: FOR 3" EDGE DIST. SPACING = 12" O.C. (FROM CHART)
FOR 2" EDGE DIST. SPACING = 12 x .71 = 8.5" O.C.

TYPICAL EDGE DISTANCE IN WOOD CONSTRUCTION = 1 1/4"
NO REDUCTION ALLOWED

05-0725.13
07/15/07
Miami-Dade Product Control Division

Roll-a-way® STORM AND SECURITY SHUTTERS
10601 OAK STREET N.E.
ST. PETERSBURG, FL 33716

COPYRIGHT © 2002
VALCO ENTERPRISES, LTD.

DRAWING TITLE:
US60 DADE COUNTY
PRODUCT APPROVAL

D.L. Fowler
Professional Engineer
Florida License No.
PE0050458

7-12-05

DRAWN:	DF
DATE:	07-01-05
APPROVED:	DF
DATE:	07-08-05
DRAWING NO:	3-01-024
SIZE: B	REV: -
SCALE:	3/8" = 1'-0"
SHEET:	10 OF 19

MAXIMUM ALLOWABLE SHUTTER WIDTHS PER MULLION HEIGHT *
2" x 3" CENTER MULLION, SINGLE SPANS

DESIGN LOADS, PSF	96" MULLION	90" MULLION	84" MULLION	78" MULLION	72" MULLION	66" MULLION	60" MULLION	54" MULLION	48" MULLION	42" MULLION
40	26	31	38	48	61	79	80	80	80	80
50	21	25	31	38	49	63	84	80	80	80
60	17	21	26	32	41	53	70	80	80	80
70	15	18	22	27	35	45	60	83	80	80
80	13	16	19	24	30	40	53	72	80	80
90	11	14	17	21	27	35	47	64	80	80
100	10	12	15	19	24	32	42	58	82	80
110	9	11	14	17	22	29	38	53	75	80
120	9	10	13	16	20	26	35	48	69	80
130	8	10	12	15	19	24	32	44	63	80
140	7	9	11	14	17	23	30	41	59	88
150	7	8	10	13	16	21	28	39	55	82
160	6	8	10	12	15	20	26	36	51	77
170	6	7	9	11	14	19	25	34	48	72
180	6	7	9	11	14	18	23	32	46	68
190	5	7	8	10	13	17	22	30	43	65
200	5	6	8	10	12	16	21	29	41	61
210	5	6	7	9	12	15	20	28	39	59
220	5	6	7	9	11	14	19	26	37	56

MAXIMUM ALLOWABLE SHUTTER WIDTHS PER MULLION HEIGHT *
2" x 3" CENTER MULLION, TWO SPANS

DESIGN LOADS, PSF	96" MULLION	90" MULLION	84" MULLION	78" MULLION	72" MULLION	66" MULLION	60" MULLION	54" MULLION	48" MULLION	42" MULLION
40	49	60	72	89	110	139	160	160	160	160
50	40	48	57	71	88	111	146	160	160	160
60	33	40	48	59	74	93	121	160	160	160
70	28	34	41	51	63	80	104	140	160	160
80	25	30	36	44	55	70	91	123	160	160
90	22	27	32	39	49	62	81	109	151	160
100	20	24	29	35	44	56	73	98	136	160
110	18	22	26	32	40	51	66	89	124	160
120	16	20	24	30	37	46	61	82	114	160
130	15	18	22	27	34	43	56	75	105	150
140	14	17	20	25	32	40	52	70	97	139
150	13	16	19	24	29	37	49	65	91	130
160	12	15	18	22	28	35	45	61	85	122
170	12	14	17	21	26	33	43	58	80	114
180	11	13	16	20	25	31	40	54	76	108
190	10	13	15	19	23	29	38	52	72	102
200	10	12	14	18	22	28	36	49	68	97
210	9	11	14	17	21	27	35	47	65	93
220	9	11	13	16	20	25	33	45	62	88

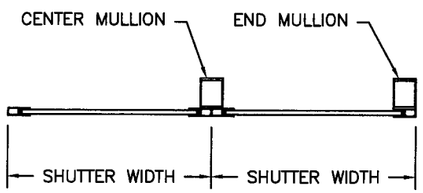

SINGLE SPANS

* MULLION PERFORMANCE CHARTS ONLY.
SEE PAGES 16 & 17 FOR (2 SPAN), SEE PAGE 1 (1 SPAN)
FOR ALLOWABLE SHUTTER SIZES.

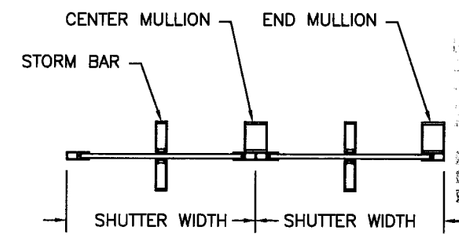

TWO SPANS

05-0725.13
02/15/02
Miami Dade Product Control Division

MAXIMUM ALLOWABLE SHUTTER WIDTHS PER MULLION HEIGHT *
2" x 3" END MULLION, SINGLE SPANS

DESIGN LOADS, PSF	102" MULLION	96" MULLION	90" MULLION	84" MULLION	78" MULLION	72" MULLION	66" MULLION	60" MULLION	54" MULLION	48" MULLION
40	43	51	62	70	70	70	70	70	70	70
50	34	41	50	61	70	70	70	70	70	70
60	29	34	42	51	64	70	70	70	70	70
70	25	29	36	44	55	70	70	70	70	70
80	21	26	31	38	48	61	70	70	70	70
90	19	23	28	34	43	54	70	70	70	70
100	17	21	25	31	38	49	63	70	70	70
110	16	19	23	28	35	44	58	70	70	70
120	14	17	21	26	32	41	53	70	70	70
130	13	16	19	24	30	38	49	65	70	70
140	12	15	18	22	27	35	45	60	70	70
150	11	14	17	20	26	33	42	56	70	70
160	11	13	16	19	24	30	40	53	70	70
170	10	12	15	18	23	29	37	50	68	70
180	10	11	14	17	21	27	35	47	64	70
190	9	11	13	16	20	26	33	44	61	70
200	9	10	12	15	19	24	32	42	58	70
210	8	10	12	15	18	23	30	40	55	70
220	8	9	11	14	17	22	29	38	53	70

MAXIMUM ALLOWABLE SHUTTER WIDTHS PER MULLION HEIGHT *
2" x 3" END MULLION, TWO SPANS

DESIGN LOADS, PSF	108" MULLION	102" MULLION	96" MULLION	90" MULLION	84" MULLION	78" MULLION	72" MULLION	66" MULLION	60" MULLION	54" MULLION
40	70	82	97	120	142	160	160	160	160	160
50	56	66	77	96	113	139	160	160	160	160
60	47	55	65	80	95	116	142	160	160	160
70	40	47	55	69	81	99	122	155	160	160
80	35	41	48	60	71	87	106	136	160	160
90	31	37	43	53	63	77	95	121	158	160
100	28	33	39	48	57	69	85	109	142	160
110	26	30	35	44	52	63	77	99	129	160
120	23	27	32	40	47	58	71	90	118	149
130	22	25	30	37	44	53	65	84	109	137
140	20	24	28	34	41	50	61	78	101	127
150	19	22	26	32	38	46	57	72	95	118
160	18	21	24	30	35	43	53	68	89	111
170	17	19	23	28	33	41	50	64	84	104
180	16	18	22	27	32	39	47	60	79	98
190	15	17	20	25	30	37	45	57	75	92
200	14	16	19	24	28	35	43	54	71	87
210	13	16	18	23	27	33	41	52	68	83
220	13	15	18	22	26	32	39	49	65	79

Roll-a-way®
STORM AND SECURITY SHUTTERS
10601 OAK STREET N.E.
ST. PETERSBURG, FL 33716

COPYRIGHT © 2002
VALCO ENTERPRISES, LTD.

DRAWING TITLE:
US60 DADE COUNTY
PRODUCT APPROVAL

D.L. Fowler
Professional Engineer
Florida License No.
PE0050458

7-1-05

DRAWN:	DJN
DATE:	03-15-02
APPROVED:	DF
DATE:	7-1-05
DRAWING NO:	3-01-024
SIZE: B	REV: -
SCALE:	3/8" = 1'-0"
SHEET:	11 OF 19

MAXIMUM ALLOWABLE SHUTTER WIDTHS PER MULLION HEIGHT *
2" x 3" CENTER MULLION, THREE SPANS

DESIGN LOADS, PSF	84" MULLION	78" MULLION	72" MULLION	66" MULLION	60" MULLION	54" MULLION	48" MULLION	42" MULLION	36" MULLION
40	85	103	128	161	208	230	230	230	230
50	68	82	102	129	166	220	230	230	230
60	56	69	85	107	139	184	230	230	230
70	48	59	73	92	119	157	216	230	230
80	42	52	64	80	104	138	189	230	230
90	38	46	57	72	92	122	168	227	230
100	34	41	51	64	83	110	151	205	230
110	31	37	46	59	76	100	137	186	230
120	28	34	43	54	69	92	126	170	212
130	26	32	39	50	64	85	116	157	196
140	24	29	37	46	59	79	108	146	182
150	23	27	34	43	55	73	101	136	170
160	21	26	32	40	52	69	94	128	159
170	20	24	30	38	49	65	89	120	150
180	19	23	28	36	46	61	84	114	141
190	18	22	27	34	44	58	79	108	134
200	17	21	26	32	42	55	75	102	127
210	16	20	24	31	40	52	72	97	121
220	15	19	23	29	38	50	69	93	116

MAXIMUM ALLOWABLE SHUTTER WIDTHS PER MULLION HEIGHT *
3" x 4" CENTER MULLION, SINGLE SPANS

DESIGN LOADS, PSF	132" MULLION	120" MULLION	108" MULLION	102" MULLION	96" MULLION	90" MULLION	84" MULLION	78" MULLION	72" MULLION	66" MULLION
40	47	63	80	80	80	80	80	80	80	80
50	38	50	69	80	80	80	80	80	80	80
60	31	42	57	68	80	80	80	80	80	80
70	27	36	49	58	70	80	80	80	80	80
80	24	31	43	51	61	74	80	80	80	80
90	21	28	38	45	54	66	80	80	80	80
100	19	25	34	41	49	60	73	80	80	80
110	17	23	31	37	45	54	67	80	80	80
120	16	21	29	34	41	50	61	76	80	80
130	15	19	26	31	38	46	56	70	80	80
140	13	18	25	29	35	43	52	65	80	80
150	13	17	23	27	33	40	49	61	78	80
160	12	16	22	26	31	37	46	57	73	80
170	11	15	20	24	29	35	43	54	68	80
180	10	14	19	23	27	33	41	51	65	80
190	10	13	18	22	26	31	39	48	61	79
200	9	13	17	20	25	30	37	46	58	75
210	9	12	16	19	23	28	35	44	55	72
220	9	11	16	19	22	27	33	42	53	69

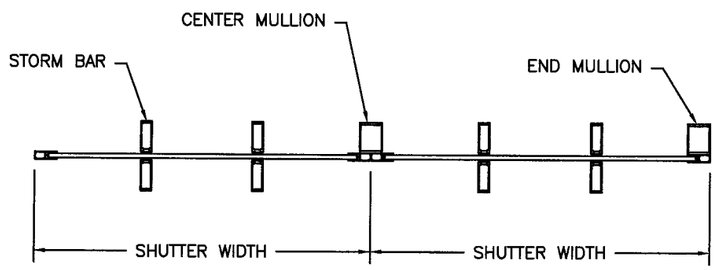

THREE SPANS

*MULLION PERFORMANCE CHARTS ONLY.
SEE PAGES 18 & 19 (3 SPAN), PAGE 1 (1 SPAN)
FOR ALLOWABLE SHUTTER SIZES.

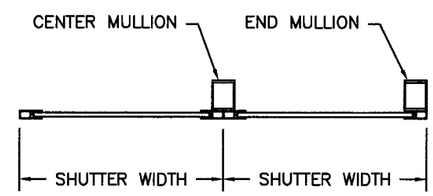

SINGLE SPANS

MAXIMUM ALLOWABLE SHUTTER WIDTHS PER MULLION HEIGHT *
2" x 3" END MULLION, THREE SPANS

DESIGN LOADS, PSF	102" MULLION	96" MULLION	90" MULLION	84" MULLION	78" MULLION	72" MULLION	66" MULLION	60" MULLION	54" MULLION	48" MULLION
40	100	119	141	168	207	230	230	230	230	230
50	80	95	113	135	166	204	230	230	230	230
60	67	79	94	112	138	170	213	230	230	230
70	57	68	81	96	119	146	182	230	230	230
80	50	59	71	84	104	128	159	208	230	230
90	45	53	63	75	92	114	142	185	230	230
100	40	48	57	67	83	102	128	166	220	230
110	36	43	51	61	75	93	116	151	200	230
120	33	40	47	56	69	85	106	139	184	230
130	31	37	44	52	64	79	98	128	170	229
140	29	34	40	48	59	73	91	119	157	212
150	27	32	38	45	55	68	85	111	147	198
160	25	30	35	42	52	64	80	104	138	186
170	24	28	33	40	49	60	75	98	130	175
180	22	26	31	37	46	57	71	92	122	165
190	21	25	30	35	44	54	67	88	116	156
200	20	24	28	34	41	51	64	83	110	149
210	19	23	27	32	40	49	61	79	105	141
220	18	22	26	31	38	46	58	76	100	135

MAXIMUM ALLOWABLE SHUTTER WIDTHS PER MULLION HEIGHT *
3" x 4" END MULLION, SINGLE SPANS

DESIGN LOADS, PSF	156" MULLION	144" MULLION	132" MULLION	120" MULLION	114" MULLION	108" MULLION	102" MULLION	96" MULLION	90" MULLION	84" MULLION
40	57	73	80	80	80	80	80	80	80	80
50	46	58	75	80	80	80	80	80	80	80
60	38	48	63	80	80	80	80	80	80	80
70	33	42	54	72	80	80	80	80	80	80
80	29	36	47	63	73	80	80	80	80	80
90	25	32	42	56	65	77	80	80	80	80
100	23	29	38	50	59	69	80	80	80	80
110	21	26	34	46	53	63	74	80	80	80
120	19	24	31	42	49	57	68	80	80	80
130	18	22	29	39	45	53	63	75	80	80
140	16	21	27	36	42	49	58	70	80	80
150	15	19	25	33	39	46	55	65	79	80
160	14	18	24	31	37	43	51	61	74	80
170	13	17	22	30	34	41	48	58	70	80
180	13	16	21	28	33	38	45	54	66	80
190	12	15	20	26	31	36	43	52	63	77
200	11	15	19	25	29	34	41	49	60	73
210	11	14	18	24	28	33	39	47	57	70
220	10	13	17	23	27	31	37	45	54	67

Product Approval
Accepted
Date: 07/15/07
Approval No. 05-0725.13
Miami-Dade Product Control Division

Roll-a-way® STORM AND SECURITY SHUTTERS
10601 OAK STREET N.E.
ST. PETERSBURG, FL 33716
COPYRIGHT © 2002
VALCO ENTERPRISES, LTD.

DRAWING TITLE:
US60 DADE COUNTY
PRODUCT APPROVAL

D.L. Fowler
Professional Engineer
Florida License No.
PE0050458
7-12-05

DRAWN:	DJN
DATE:	03-13-02
APPROVED:	DF
DATE:	7-1-05
DRAWING NO:	3-01-024
SIZE: B	REV: -
SCALE:	N/A
SHEET:	12 OF 19

MAXIMUM ALLOWABLE SHUTTER WIDTHS PER MULLION HEIGHT *
3" x 4" CENTER MULLION, TWO SPANS

DESIGN LOADS, PSF	144" MULLION	132" MULLION	120" MULLION	108" MULLION	102" MULLION	96" MULLION	90" MULLION	84" MULLION	78" MULLION	72" MULLION
40	76	98	126	160	160	160	160	160	160	160
50	61	78	100	138	160	160	160	160	160	160
60	51	65	84	115	133	157	160	160	160	160
70	44	56	72	98	114	135	160	160	160	160
80	38	49	63	86	100	118	143	160	160	160
90	34	43	56	77	89	105	127	148	160	160
100	31	39	50	69	80	94	114	133	149	160
110	28	35	46	63	73	86	104	121	136	153
120	25	33	42	57	66	78	95	111	125	141
130	24	30	39	53	61	72	88	103	115	130
140	22	28	36	49	57	67	82	95	107	120
150	20	26	33	46	53	63	76	89	100	112
160	19	24	31	43	50	59	71	83	93	105
170	18	23	30	41	47	55	67	79	88	99
180	17	22	28	38	44	52	63	74	83	94
190	16	21	26	36	42	50	60	70	79	89
200	15	20	25	34	40	47	57	67	75	84
210	15	19	24	33	38	45	54	64	71	80
220	14	18	23	31	36	43	52	61	68	77

MAXIMUM ALLOWABLE SHUTTER WIDTHS PER MULLION HEIGHT *
3" x 4" CENTER MULLION, THREE SPANS

DESIGN LOADS, PSF	144" MULLION	132" MULLION	120" MULLION	108" MULLION	102" MULLION	96" MULLION	90" MULLION	84" MULLION	78" MULLION	72" MULLION
40	95	120	156	207	230	230	230	230	230	230
50	76	96	125	165	192	226	230	230	230	230
60	63	80	104	138	160	188	209	230	230	230
70	54	69	89	118	137	161	179	197	219	230
80	47	60	78	103	120	141	157	173	192	215
90	42	53	69	92	107	126	139	154	171	191
100	38	48	62	83	96	113	125	138	154	172
110	34	44	57	75	87	103	114	126	140	156
120	32	40	52	69	80	94	104	115	128	143
130	29	37	48	64	74	87	96	106	118	132
140	27	34	45	59	69	81	89	99	110	123
150	25	32	42	55	64	75	84	92	102	115
160	24	30	39	52	60	71	78	86	96	107
170	22	28	37	49	57	66	74	81	90	101
180	21	27	35	46	53	63	70	77	85	96
190	20	25	33	44	51	59	66	73	81	91
200	19	24	31	41	48	56	63	69	77	86
210	18	23	30	39	46	54	60	66	73	82
220	17	22	28	38	44	51	57	63	70	78

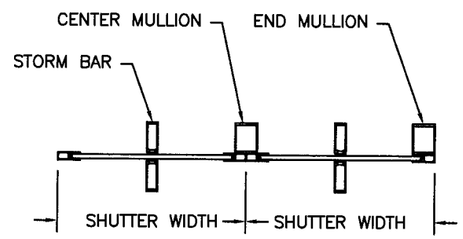

TWO SPANS

*MULLION PERFORMANCE CHARTS ONLY.
SEE PAGES 16 & 17 (2 SPAN), PAGES 18 & 19 (3 SPAN)
FOR ALLOWABLE SHUTTER SIZES.

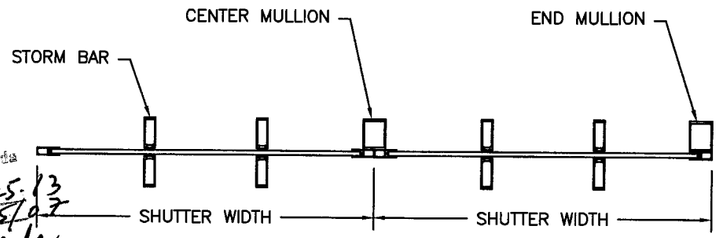

THREE SPANS

MAXIMUM ALLOWABLE SHUTTER WIDTHS PER MULLION HEIGHT *
3" x 4" END MULLION, TWO SPANS

DESIGN LOADS, PSF	180" MULLION	168" MULLION	156" MULLION	144" MULLION	132" MULLION	120" MULLION	114" MULLION	108" MULLION	102" MULLION	96" MULLION
40	82	99	121	152	160	160	160	160	160	160
50	66	79	97	122	156	160	160	160	160	160
60	55	66	81	102	130	160	160	160	160	160
70	47	57	69	87	112	144	160	160	160	160
80	41	49	61	76	98	126	146	160	160	160
90	36	44	54	68	87	112	130	151	160	160
100	33	40	49	61	78	100	117	136	159	160
110	30	36	44	55	71	91	107	124	144	160
120	27	33	40	51	65	84	98	113	132	153
130	25	30	37	47	60	77	90	105	122	141
140	23	28	35	44	56	72	84	97	114	131
150	22	26	32	41	52	67	78	91	106	122
160	20	25	30	38	49	63	73	85	99	114
170	19	23	29	36	46	59	69	80	93	107
180	18	22	27	34	43	56	65	76	88	100
190	17	21	26	32	41	53	62	72	84	95
200	16	20	24	30	39	50	59	68	79	90
210	16	19	23	29	37	48	56	65	76	85
220	15	18	22	28	35	46	53	62	72	81

MAXIMUM ALLOWABLE SHUTTER WIDTHS PER MULLION HEIGHT *
3" x 4" END MULLION, THREE SPANS

DESIGN LOADS, PSF	180" MULLION	168" MULLION	156" MULLION	144" MULLION	132" MULLION	120" MULLION	114" MULLION	108" MULLION	102" MULLION	96" MULLION
40	103	124	152	189	230	230	230	230	230	230
50	82	99	121	151	192	230	230	230	230	230
60	69	83	101	126	160	207	230	230	230	230
70	59	71	87	108	137	177	202	230	230	230
80	51	62	76	95	120	155	177	208	230	230
90	46	55	67	84	106	138	157	185	212	230
100	41	50	61	76	96	124	141	166	191	225
110	37	45	55	69	87	113	128	151	174	205
120	34	41	51	63	80	103	118	138	159	188
130	32	38	47	58	74	96	109	128	147	173
140	29	35	43	54	68	89	101	119	136	161
150	27	33	40	50	64	83	94	111	127	150
160	26	31	38	47	60	78	88	104	119	141
170	24	29	36	45	56	73	83	98	112	132
180	23	28	34	42	53	69	78	92	106	125
190	22	26	32	40	50	65	74	87	101	119
200	21	25	30	38	48	62	71	83	96	113
210	20	24	29	36	46	59	67	79	91	107
220	19	23	28	34	44	56	64	75	87	102

Roll-a-way®
STORM AND SECURITY SHUTTERS
10601 OAK STREET N.E.
ST. PETERSBURG, FL 33716

COPYRIGHT © 2002
VALCO ENTERPRISES, LTD.

DRAWING TITLE:
US60 DADE COUNTY
PRODUCT APPROVAL

D.L. Fowler
Professional Engineer
Florida License No.
PE0050458

7-12-05

DRAWN:	DJN
DATE:	03-15-02
APPROVED:	DF
DATE:	7-1-05
DRAWING NO:	3-01-024
SIZE: B	REV: -
SCALE:	3/8" = 1'-0"
SHEET:	13 OF 19

MAXIMUM ALLOWABLE SHUTTER WIDTHS PER MULLION HEIGHT *
3" x 6" CENTER MULLION, SINGLE SPANS

DESIGN LOADS, PSF	168" MULLION	156" MULLION	144" MULLION	132" MULLION	120" MULLION	108" MULLION	102" MULLION	96" MULLION	90" MULLION	84" MULLION
40	52	65	80	80	80	80	80	80	80	80
50	42	52	66	80	80	80	80	80	80	80
60	35	43	55	71	80	80	80	80	80	80
70	30	37	47	61	80	80	80	80	80	80
80	26	32	41	54	71	80	80	80	80	80
90	23	29	37	48	63	80	80	80	80	80
100	21	26	33	43	57	78	80	80	80	80
110	19	24	30	39	52	71	80	80	80	80
120	17	22	27	36	47	65	77	80	80	80
130	16	20	25	33	44	60	71	80	80	80
140	15	19	24	31	41	56	66	80	80	80
150	14	17	22	29	38	52	62	74	80	80
160	13	16	21	27	36	49	58	70	80	80
170	12	15	19	25	34	46	55	65	79	80
180	12	14	18	24	32	43	52	62	75	80
190	11	14	17	23	30	41	49	59	71	80
200	10	13	16	21	28	39	46	56	68	80
210	10	12	16	20	27	37	44	53	64	79
220	9	12	15	19	26	36	42	51	61	76

MAXIMUM ALLOWABLE SHUTTER WIDTHS PER MULLION HEIGHT *
3" x 6" CENTER MULLION, TWO SPANS

DESIGN LOADS, PSF	228" MULLION	216" MULLION	204" MULLION	192" MULLION	180" MULLION	168" MULLION	156" MULLION	144" MULLION	132" MULLION	120" MULLION
40	47	55	65	77	93	112	138	160	160	160
50	38	44	52	61	74	90	111	139	160	160
60	31	37	43	51	62	75	92	116	136	156
70	27	32	37	44	53	64	79	99	116	134
80	24	28	32	38	46	56	69	87	102	117
90	21	25	29	34	41	50	61	77	90	104
100	19	22	26	31	37	45	55	69	81	94
110	17	20	24	28	34	41	50	63	74	85
120	16	18	22	26	31	37	46	58	68	78
130	14	17	20	24	28	35	43	53	63	72
140	13	16	19	22	26	32	40	50	58	67
150	13	15	17	20	25	30	37	46	54	62
160	12	14	16	19	23	28	35	43	51	59
170	11	13	15	18	22	26	33	41	48	55
180	10	12	14	17	21	25	31	39	45	52
190	10	12	14	16	19	24	29	37	43	49
200	9	11	13	15	19	22	28	35	41	47
210	9	11	12	15	18	21	26	33	39	45
220	9	10	12	14	17	20	25	32	37	43

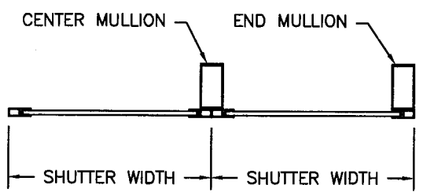

SINGLE SPANS

*MULLION PERFORMANCE CHARTS ONLY.
SEE PAGE 1(1SPAN) AND PAGES 16 & 17 (2 SPAN)
FOR ALLOWABLE SHUTTER SIZES.

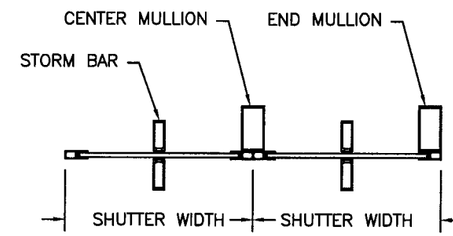

TWO SPANS

PRODUCT REVIEWED
In compliance with the Florida
Building Code
Application No. 05-0725-13
Expiration Date 07/15/07
By M Kraab
Miami-Dade Product Control
Division

MAXIMUM ALLOWABLE SHUTTER WIDTHS PER MULLION HEIGHT *
3" x 6" END MULLION, SINGLE SPANS

DESIGN LOADS, PSF	216" MULLION	204" MULLION	192" MULLION	180" MULLION	168" MULLION	156" MULLION	144" MULLION	132" MULLION	120" MULLION	108" MULLION
40	49	58	69	80	80	80	80	80	80	80
50	39	46	55	67	80	80	80	80	80	80
60	32	38	46	56	69	80	80	80	80	80
70	28	33	40	48	59	74	80	80	80	80
80	24	29	35	42	52	64	80	80	80	80
90	22	26	31	37	46	57	73	80	80	80
100	19	23	28	34	41	52	66	80	80	80
110	18	21	25	31	38	47	60	77	80	80
120	16	19	23	28	34	43	55	71	80	80
130	15	18	21	26	32	40	50	66	80	80
140	14	16	20	24	30	37	47	61	80	80
150	13	15	18	22	28	34	44	57	76	80
160	12	14	17	21	26	32	41	53	71	80
170	11	14	16	20	24	30	39	50	67	80
180	11	13	15	19	23	29	36	47	63	80
190	10	12	15	18	22	27	35	45	60	80
200	10	12	14	17	21	26	33	43	57	78
210	9	11	13	16	20	25	31	41	54	74
220	9	10	13	15	19	23	30	39	52	71

MAXIMUM ALLOWABLE SHUTTER WIDTHS PER MULLION HEIGHT *
3" x 6" END MULLION, TWO SPANS

DESIGN LOADS, PSF	180" MULLION	168" MULLION	156" MULLION	144" MULLION	132" MULLION	120" MULLION	114" MULLION	108" MULLION	102" MULLION	96" MULLION
40	160	160	160	160	160	160	160	160	160	160
50	149	160	160	160	160	160	160	160	160	160
60	124	150	160	160	160	160	160	160	160	160
70	106	128	157	160	160	160	160	160	160	160
80	93	112	138	160	160	160	160	160	160	160
90	83	100	122	154	160	160	160	160	160	160
100	74	90	110	138	160	160	160	160	160	160
110	68	82	100	126	148	160	160	160	160	160
120	62	75	92	115	136	156	160	160	160	155
130	57	69	85	106	125	144	155	160	160	155
140	53	64	79	99	116	134	144	156	160	155
150	50	60	73	92	108	125	135	146	159	155
160	46	56	69	86	102	117	126	137	149	155
170	44	53	65	81	96	110	119	129	140	153
180	41	50	61	77	90	104	112	122	132	144
190	39	47	58	73	86	99	106	115	125	137
200	37	45	55	69	81	94	101	109	119	130
210	35	43	52	66	77	89	96	104	113	124
220	34	41	50	63	74	85	92	99	108	118

Roll-a-way®
STORM AND SECURITY SHUTTERS
10601 OAK STREET N.E.
ST. PETERSBURG, FL 33716

COPYRIGHT © 2002
VALCO ENTERPRISES, LTD.

DRAWING TITLE:
US60 DADE COUNTY
PRODUCT APPROVAL

D.L. Fowler
Professional Engineer
Florida License No.
PE0050458

7-12-05

DRAWN:	DJN
DATE:	03-15-02
APPROVED:	D7
DATE:	7-1-05
DRAWING NO:	3-01-024
SIZE: B	REV: -
SCALE:	3/8" = 1'-0"
SHEET:	14 OF 19

MAXIMUM ALLOWABLE SHUTTER WIDTHS PER MULLION HEIGHT *
3" x 6" CENTER MULLION, THREE SPANS

DESIGN LOADS, PSF	180" MULLION	168" MULLION	156" MULLION	144" MULLION	132" MULLION	120" MULLION	114" MULLION	108" MULLION	102" MULLION	96" MULLION
40	117	141	167	186	210	230	230	230	230	230
50	93	113	133	149	168	192	206	222	230	230
60	78	94	111	124	140	160	171	185	200	217
70	67	81	95	106	120	137	147	158	171	186
80	58	71	83	93	105	120	129	138	150	162
90	52	63	74	83	93	107	114	123	133	144
100	47	57	67	75	84	96	103	111	120	130
110	42	51	61	68	76	87	94	101	109	118
120	39	47	56	62	70	80	86	92	100	108
130	36	43	51	57	65	74	79	85	92	100
140	33	40	48	53	60	69	73	79	86	93
150	31	38	44	50	56	64	69	74	80	87
160	29	35	42	47	53	60	64	69	75	81
170	27	33	39	44	49	56	61	65	70	76
180	26	31	37	41	47	53	57	62	67	72
190	25	30	35	39	44	50	54	58	63	68
200	23	28	33	37	42	48	51	55	60	65
210	22	27	32	35	40	46	49	53	57	62
220	21	26	30	34	38	44	47	50	54	59

*MULLION PERFORMANCE CHARTS ONLY.
SEE PAGES 18 & 19 FOR ALLOWABLE
3 SPAN SHUTTER SIZES.

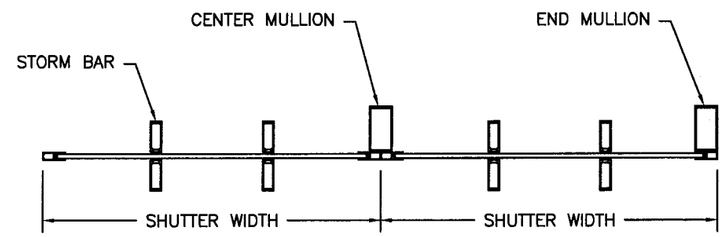

THREE SPANS

MAXIMUM ALLOWABLE SHUTTER WIDTHS PER MULLION HEIGHT *
3" x 6" END MULLION, THREE SPANS

DESIGN LOADS, PSF	228" MULLION	216" MULLION	204" MULLION	192" MULLION	180" MULLION	168" MULLION	156" MULLION	144" MULLION	132" MULLION	120" MULLION
40	121	141	165	194	230	230	230	230	230	230
50	97	113	132	155	187	226	230	230	230	230
60	81	94	110	129	156	188	222	230	230	230
70	69	81	94	111	133	162	190	213	230	230
80	60	70	82	97	117	141	167	186	210	230
90	54	63	73	86	104	126	148	166	187	213
100	48	56	66	78	93	113	133	149	168	192
110	44	51	60	71	85	103	121	135	153	174
120	40	47	55	65	78	94	111	124	140	160
130	37	43	51	60	72	87	102	115	129	148
140	35	40	47	55	67	81	95	106	120	137
150	32	38	44	52	62	75	89	99	112	128
160	30	35	41	49	58	71	83	93	105	120
170	28	33	39	46	55	67	78	88	99	113
180	27	31	37	43	52	63	74	83	93	107
190	25	30	35	41	49	60	70	78	89	101
200	24	28	33	39	47	57	67	75	84	96
210	23	27	31	37	44	54	63	71	80	91
220	22	26	30	35	42	51	61	68	76	87

Roll-a-way®
STORM AND SECURITY SHUTTERS
10601 OAK STREET N.E.
ST. PETERSBURG, FL 33716

COPYRIGHT © 2002
VALCO ENTERPRISES, LTD.

PRODUCT APPROVED
Approved in accordance with the Florida
Building Code
Application No. 05-0725-13
Expiration Date 07/15/07
By M. Thrash
Broward Dade Product Control
Division

DRAWING TITLE:
US60 DADE COUNTY
PRODUCT APPROVAL

D.L. Fowler
Professional Engineer
Florida License No.
PE0050458

7-12-05

DRAWN:	DJN
DATE:	03-15-02
APPROVED:	DF
DATE:	7-1-05
DRAWING NO:	3-01-024
SIZE: B	REV: -
SCALE:	3/8" = 1'-0"
SHEET:	15 OF 19

APPLICATION CHARTS FOR TWO SPAN SHUTTERS (MAX. LIMITS)

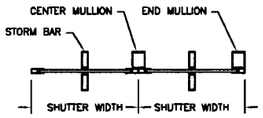

TWO SPANS

PRODUCT APPROVED
Miami-Dade County
Product Control
Application No. 05-0725.13
Expiration Date 07/15/07
By
Miami-Dade Product Control
Division

HEADER #1, TWO SPANS

MAXIMUM ALLOWABLE UNIT HEIGHTS, FOR GIVEN PRESSURE & UNIT WIDTH, PER TOTAL SYSTEM DEFLECTION LESS THAN 2"

DESIGN PRESSURE PSF	40" UNIT WIDTH				60" UNIT WIDTH				80" UNIT WIDTH				100" UNIT WIDTH				120" UNIT WIDTH				140" UNIT WIDTH				160" UNIT WIDTH				180" UNIT WIDTH				MAXIMUM UNIT WIDTH
	SB #1	SB #2	SB #3	SB #4	SB #1	SB #2	SB #3	SB #4	SB #1	SB #2	SB #3	SB #4	SB #1	SB #2	SB #3	SB #4	SB #1	SB #2	SB #3	SB #4	SB #1	SB #2	SB #3	SB #4	SB #1	SB #2	SB #3	SB #4	SB #1	SB #2	SB #3	SB #4	
30	136.7	159.2	192.4	215.2	115.5	140.9	170.2	190.2	98.7	128.3	154.4	172.2	87.5	116.9	129.5	129.5	79.5	88.7	88.7	88.7	64.5	64.5	64.5	64.5	49.0	49.0	49.0	49.0	38.4	38.4	38.4	38.4	190
35	131.5	153.2	185.0	207.0	106.9	135.5	163.3	182.8	91.3	123.1	147.9	165.2	81.1	111.1	111.1	111.1	73.5	76.1	76.1	76.1	55.3	55.3	55.3	55.2	42.0	42.0	42.0	42.0	33.1	33.1	33.1	33.1	182
40	126.1	148.1	179.0	200.2	100.1	130.9	158.0	176.6	85.5	118.7	142.7	155.0	75.7	97.1	97.1	97.1	66.5	66.5	66.5	66.5	48.4	48.4	48.4	48.4	36.7	36.7	36.7	36.7	28.9*	28.9*	28.9*	28.9*	177
45	118.9	143.7	173.8	194.4	94.3	126.9	153.4	171.4	80.5	112.3	137.7	137.7	71.5	86.3	86.3	86.3	59.1	59.1	59.1	59.1	43.0	43.0	43.0	43.0	32.7	32.7	32.7	32.7	25.7*	25.7*	25.7*	25.7*	172
50	112.7	139.9	169.2	189.2	89.5	123.5	149.1	166.6	76.5	106.5	123.9	123.9	67.7	77.7	77.7	77.7	53.3	53.3	53.3	53.2	38.6	38.6	38.6	38.6	29.5	29.5	29.5	29.5	23.1*	23.1*	23.1*	23.1*	166
55	107.5	136.7	165.2	184.8	85.3	118.9	145.5	162.6	72.9	101.5	112.7	112.7	64.7	70.7	70.7	70.7	48.3	48.2	48.2	48.2	35.1	35.1	35.1	35.1	26.7	26.7	26.7	26.7	20.9*	20.9*	20.9*	20.9*	161
60	102.9	133.7	161.6	180.8	81.7	113.9	142.1	159.0	69.7	97.1	103.3	103.3	61.9	64.7	64.7	64.7	44.2	44.2	44.2	44.2	32.3	32.3	32.3	32.3	24.5*	24.5*	24.5*	24.5*	N/A	N/A	N/A	N/A	156
70	95.3	128.5	155.4	173.8	75.5	105.3	131.9	152.6	64.5	88.5	88.5	88.5	55.5	55.5	55.5	55.5	37.9	37.9	37.9	37.9	27.7	27.7	27.7	27.7	20.9*	20.9*	20.9*	20.9*	N/A	N/A	N/A	N/A	147
80	89.1	124.3	150.2	168.2	70.7	98.5	123.3	142.5	60.3	77.5	77.5	77.5	48.5	48.5	48.4	48.4	33.3	33.3	33.3	33.3	24.1	24.1	24.1	24.1	18.3*	18.3*	18.3*	18.3*	N/A	N/A	N/A	N/A	143
90	84.1	117.1	145.7	163.2	66.7	92.9	116.3	126.5	56.9	68.7	68.7	68.7	43.1	43.0	43.0	43.0	29.5	29.5	29.5	29.5	21.5*	21.5*	21.5*	21.5*	N/A	N/A	N/A	N/A	N/A	N/A	N/A	N/A	137
100	79.7	111.1	139.1	158.8	63.3	88.1	110.3	113.9	53.9	61.9	61.9	61.9	38.8	38.8	38.8	38.8	26.5	26.5	26.5	26.5	19.3*	19.3*	19.3*	19.3*	N/A	N/A	N/A	N/A	N/A	N/A	N/A	N/A	133
110	75.9	105.9	132.5	155.0	60.3	84.1	103.5	103.5	51.5	56.3	56.3	56.3	35.3	35.3	35.3	35.3	24.1	24.1	24.1	24.1	17.5*	17.5*	17.5*	17.5*	N/A	N/A	N/A	N/A	N/A	N/A	N/A	N/A	127
120	72.7	101.5	126.9	151.6	57.7	80.5	94.9	94.9	49.3	51.5	51.5	51.5	32.3	32.3	32.3	32.3	22.1	22.1	22.1	22.1	16.1*	16.1*	16.1*	16.1*	N/A	N/A	N/A	N/A	N/A	N/A	N/A	N/A	124
130	69.9	97.5	121.9	148.5	55.5	77.3	87.7	87.7	47.3	47.5	47.5	47.5	29.9	29.9	29.9	29.9	20.5	20.5	20.5	20.5	14.9*	14.9*	14.9*	14.9*	N/A	N/A	N/A	N/A	N/A	N/A	N/A	N/A	122
140	67.3	93.9	117.5	145.7	53.5	74.5	81.3	81.3	44.1	44.1	44.1	44.0	27.7	27.7	27.7	27.7	18.9*	18.9*	18.9*	18.9*	N/A	N/A	N/A	N/A	N/A	N/A	N/A	N/A	N/A	N/A	N/A	N/A	117
150	65.1	90.7	113.5	143.3	51.7	71.9	75.9	75.9	41.3	41.3	41.2	41.2	25.9	25.9	25.9	25.9	17.7*	17.7*	17.7*	17.7*	N/A	N/A	N/A	N/A	N/A	N/A	N/A	N/A	N/A	N/A	N/A	N/A	114
160	62.9	87.9	109.9	140.5	49.9	69.7	71.1	71.1	38.7	38.6	38.6	38.6	24.3	24.3	24.3	24.3	16.5*	16.5*	16.5*	16.5*	N/A	N/A	N/A	N/A	N/A	N/A	N/A	N/A	N/A	N/A	N/A	N/A	111
170	61.1	85.1	106.7	136.3	48.5	66.9	66.9	66.9	36.4	36.3	36.3	36.3	22.7	22.7	22.7	22.7	15.5*	15.5*	15.5*	15.5*	N/A	N/A	N/A	N/A	N/A	N/A	N/A	N/A	N/A	N/A	N/A	N/A	107
180	59.3	82.7	103.7	132.5	47.1	63.3	63.3	63.3	34.3	34.3	34.3	34.3	21.5	21.5	21.5	21.5	14.7*	14.7*	14.7*	14.7*	N/A	N/A	N/A	N/A	N/A	N/A	N/A	N/A	N/A	N/A	N/A	N/A	105
190	57.9	80.5	100.9	128.9	45.9	59.9	59.9	59.9	32.5	32.5	32.5	32.5	20.3	20.3	20.3	20.3	13.9*	13.9*	13.9*	13.9*	N/A	N/A	N/A	N/A	N/A	N/A	N/A	N/A	N/A	N/A	N/A	N/A	102
200	56.3	78.5	98.3	125.7	44.7	56.9	56.9	56.9	30.9	30.9	30.9	30.9	19.3	19.3	19.3	19.3	N/A	N/A	N/A	N/A	N/A	N/A	N/A	N/A	N/A	N/A	N/A	N/A	N/A	N/A	N/A	N/A	100
210	54.9	76.7	95.9	122.7	43.7	54.1	54.1	54.1	29.5	29.5	29.5	29.5	18.5*	18.5*	18.5*	18.5*	N/A	N/A	N/A	N/A	N/A	N/A	N/A	N/A	N/A	N/A	N/A	N/A	N/A	N/A	N/A	N/A	97
220	53.7	74.9	93.7	119.9	42.5	51.7	51.7	51.7	28.1	28.1	28.1	28.1	17.5*	17.5*	17.5*	17.5*	N/A	N/A	N/A	N/A	N/A	N/A	N/A	N/A	N/A	N/A	N/A	N/A	N/A	N/A	N/A	N/A	95

HEADER #2, TWO SPANS

MAXIMUM ALLOWABLE UNIT HEIGHTS, FOR GIVEN PRESSURE & UNIT WIDTH, PER TOTAL SYSTEM DEFLECTION LESS THAN 2"

DESIGN PRESSURE PSF	40" UNIT WIDTH				60" UNIT WIDTH				80" UNIT WIDTH				100" UNIT WIDTH				120" UNIT WIDTH				140" UNIT WIDTH				160" UNIT WIDTH				180" UNIT WIDTH				MAXIMUM UNIT WIDTH
	SB #1	SB #2	SB #3	SB #4	SB #1	SB #2	SB #3	SB #4	SB #1	SB #2	SB #3	SB #4	SB #1	SB #2	SB #3	SB #4	SB #1	SB #2	SB #3	SB #4	SB #1	SB #2	SB #3	SB #4	SB #1	SB #2	SB #3	SB #4	SB #1	SB #2	SB #3	SB #4	
30	136.9	159.4	192.6	215.6	115.5	141.7	171.2	191.6	98.7	130.3	157.4	176.0	87.5	121.7	146.7	163.8	79.5	110.7	137.1	152.8	73.3	102.1	127.5	135.3	68.2	95.3	102.99	102.8	64.2	80.6	80.6	80.6	190
35	131.7	153.4	185.4	207.4	106.9	136.3	164.8	184.2	91.3	125.3	151.4	169.2	81.1	112.9	140.7	157.2	73.5	102.5	128.3	143.1	67.8	94.5	115.99	115.9	63.2	88.1	88.0	88.0	59.4	69.2	69.2	69.2	182
40	126.1	148.1	179.2	200.6	100.1	131.7	159.2	178.2	85.5	119.1	146.1	163.6	75.7	105.7	132.3	151.8	68.9	95.9	120.1	139.3	63.4	88.5	101.5	101.5	59.0	77.0	77.0	77.0	55.6*	60.4*	60.4*	60.4*	177
45	118.9	143.9	174.0	194.8	94.3	127.9	154.6	173.0	80.5	112.3	140.5	158.6	71.5	99.5	124.7	146.9	64.9	90.5	113.1	123.9	59.8	83.3	90.0	90.0	55.8	68.4	68.4	68.4	52.4*	53.8*	53.8*	53.8*	172
50	112.7	140.1	169.4	189.6	89.5	124.5	150.6	168.4	76.5	106.5	133.3	154.4	67.7	94.5	118.3	142.7	61.4	85.7	107.3	111.5	56.6	79.1	81.0	81.0	52.8	61.6	61.6	61.6	48.4*	48.4*	48.4*	48.4*	166
55	107.5	136.9	165.4	185.2	85.3	118.9	146.9	164.4	72.9	101.5	127.1	150.6	64.7	90.1	112.7	139.1	58.6	81.7	101.3	101.3	54.0	73.6	73.6	73.6	50.4	56.0	56.0	56.0	44.0*	44.0*	44.0*	44.0*	161
60	102.9	133.9	162.0	181.2	81.7	113.9	142.5	160.8	69.7	97.1	121.7	147.1	61.9	86.3	107.9	135.5	56.0	78.3	92.9	92.9	51.8	67.4	67.4	67.4	48.2*	51.2*	51.2*	51.2*	N/A	N/A	N/A	N/A	156
70	95.3	128.7	155.8	174.4	75.5	105.3	131.9	154.6	64.5	89.9	112.7	141.3	57.3	79.9	99.9	116.3	51.8	72.5	79.6	79.6	47.8	57.8	57.8	57.8	44.0*	44.0*	44.0*	44.0*	N/A	N/A	N/A	N/A	147
80	89.1	124.3	150.6	168.6	70.7	98.5	123.3	149.3	60.3	84.1	105.3	134.7	53.4	74.7	93.5	101.7	48.6	67.6	69.6	69.6	44.8	50.6	50.6	50.6	38.4*	38.4*	38.4*	38.4*	N/A	N/A	N/A	N/A	143
90	84.1	117.1	146.1	163.6	66.7	92.9	116.3	144.9	56.9	79.3	99.3	127.1	50.4	70.3	88.1	90.3	45.8	61.8	61.8	61.8	42.2*	45.0*	45.0*	45.0*	N/A	N/A	N/A	N/A	N/A	N/A	N/A	N/A	137
100	79.7	111.1	139.1	159.4	63.3	88.1	110.3	141.1	53.9	75.3	94.3	120.5	47.8	66.7	81.3	81.3	43.4	55.6	55.6	55.6	40.0*	40.4*	40.4*	40.4*	N/A	N/A	N/A	N/A	N/A	N/A	N/A	N/A	133
110	75.9	105.9	132.5	155.6	60.3	84.1	105.1	134.5	51.5	71.7	89.9	114.9	45.6	63.7	73.9	73.8	41.4	50.6	50.6	50.6	36.9*	36.9*	36.9*	36.9*	N/A	N/A	N/A	N/A	N/A	N/A	N/A	N/A	127
120	72.7	101.5	126.9	152.2	57.7	80.5	100.7	128.7	49.3	68.7	86.1	108.1	43.6	60.8	67.6	67.6	39.6	46.2	46.2	46.2	33.7*	33.7*	33.7*	33.7*	N/A	N/A	N/A	N/A	N/A	N/A	N/A	N/A	124
130	69.9	97.5	121.9	149.1	55.5	77.3	96.7	123.7	47.3	66.1	82.7	99.7	41.8	58.4	62.4	62.4	38.0	42.8	42.8	42.8	31.1*	31.1*	31.1*	31.1*	N/A	N/A	N/A	N/A	N/A	N/A	N/A	N/A	122
140	67.3	93.9	117.5	146.3	53.5	74.5	93.3	119.3	45.7	63.5	79.7	92.5	40.4	56.4	58.0	58.0	36.7*	39.6*	39.6*	39.6*	N/A	N/A	N/A	N/A	N/A	N/A	N/A	N/A	N/A	N/A	N/A	N/A	117
150	65.1	90.7	113.5	143.9	51.7	71.9	90.1	115.1	44.0	61.5	76.9	86.5	39.0	54.0	54.0	54.0	35.5*	37.1*	37.1*	37.1*	N/A	N/A	N/A	N/A	N/A	N/A	N/A	N/A	N/A	N/A	N/A	N/A	114
160	62.9	87.9	109.9	140.5	49.9	69.7	87.3	111.5	42.6	59.5	74.5	81.1	37.9	50.6	50.6	50.6	34.3*	34.7*	34.7*	34.7*	N/A	N/A	N/A	N/A	N/A	N/A	N/A	N/A	N/A	N/A	N/A	N/A	111
170	61.1	85.1	106.7	136.3	48.5	67.5	84.5	108.1	41.2	57.7	72.3	76.3	36.7	47.6	47.6	47.6	32.7*	32.7*	32.7*	32.7*	N/A	N/A	N/A	N/A	N/A	N/A	N/A	N/A	N/A	N/A	N/A	N/A	107
180	59.3	82.7	103.7	132.5	47.1	65.7	82.3	105.1	40.2	56.1	70.3	71.9	35.7	45.0	45.0	45.0	30.9*	30.9*	30.9*	30.9*	N/A	N/A	N/A	N/A	N/A	N/A	N/A	N/A	N/A	N/A	N/A	N/A	105
190	57.9	80.5	100.9	128.9	45.9	63.9	80.1	102.3	39.0	54.5	68.1	68.0	34.7	42.6	42.6	42.6	29.3*	29.3*	29.3*	29.3*	N/A	N/A	N/A	N/A	N/A	N/A	N/A	N/A	N/A	N/A	N/A	N/A	102
200	56.3	78.5	98.3	125.7	44.7	62.3	77.9	99.7	38.0	53.1	64.7	64.6	33.9	40.6	40.6	40.6	N/A	N/A	N/A	N/A	N/A	N/A	N/A	N/A	N/A	N/A	N/A	N/A	N/A	N/A	N/A	N/A	100
210	54.9	76.7	95.9	122.7	43.7	60.7	76.1	97.3	37.3	51.8	61.6	61.6	33.1*	38.6*	38.6*	38.6*	N/A	N/A	N/A	N/A	N/A	N/A	N/A	N/A	N/A	N/A	N/A	N/A	N/A	N/A	N/A	N/A	97
220	53.7	74.9	93.7	119.9	42.5	59.3	74.3	95.1	36.3	50.6	58.8	58.8	32.3*	36.9*	36.9*	36.9*	N/A	N/A	N/A	N/A	N/A	N/A	N/A	N/A	N/A	N/A	N/A	N/A	N/A	N/A	N/A	N/A	95

* FOR INTERPOLATION ONLY (MAXIMUM WIDTH GOVERNS)

NOTES: "SB" = STORM BAR, SB #1 = 3", SB #2 = 3" WITH INSERT, SB #3 = 4", & SB #4 = 4" WITH INSERT

Roll-a-way® STORM AND SECURITY SHUTTERS
10601 OAK STREET N.E.
ST. PETERSBURG, FL 33716
COPYRIGHT © 2002
VALCO ENTERPRISES, LTD.

DRAWING TITLE:
US60 DADE COUNTY
PRODUCT APPROVAL

D.L. Fowler
Professional Engineer
Florida License No.
PE0050458
7-12-05

DRAWN:	DJN
DATE:	03-15-02
APPROVED:	DF
DATE:	7-8-05
DRAWING NO:	3-01-024
SIZE: B	REV: -
SCALE:	3/8" = 1'-0"
SHEET:	16 OF 19

APPLICATION CHART FOR TWO SPAN SHUTTERS (MAX. LIMITS)

HEADER #3, TWO SPANS

MAXIMUM ALLOWABLE UNIT HEIGHTS, FOR GIVEN PRESSURE & UNIT WIDTH, PER TOTAL SYSTEM DEFLECTION LESS THAN 2"

DESIGN PRESSURE PSF	40" UNIT WIDTH				60" UNIT WIDTH				80" UNIT WIDTH				100" UNIT WIDTH				120" UNIT WIDTH				140" UNIT WIDTH				160" UNIT WIDTH				180" UNIT WIDTH				MAXIMUM UNIT WIDTH
	SB #1	SB #2	SB #3	SB #4	SB #1	SB #2	SB #3	SB #4	SB #1	SB #2	SB #3	SB #4	SB #1	SB #2	SB #3	SB #4	SB #1	SB #2	SB #3	SB #4	SB #1	SB #2	SB #3	SB #4	SB #1	SB #2	SB #3	SB #4	SB #1	SB #2	SB #3	SB #4	
30	136.9	159.4	192.6	215.6	115.5	141.7	171.6	192.0	98.7	130.9	158.2	177.0	87.5	121.9	148.3	165.8	79.5	110.7	138.7	156.8	73.2	102.1	127.9	148.3	68.2	95.3	119.3	140.1	64.2	89.6	112.2	131.7	190
35	131.7	153.4	185.4	207.4	106.9	136.5	165.0	184.6	91.3	125.9	152.2	170.2	81.1	112.9	141.3	159.4	73.5	102.5	128.3	150.4	67.8	94.5	118.3	142.1	63.2	88.2	110.4	133.9	59.4	82.8	103.8	125.3	182
40	126.1	148.3	179.4	200.6	100.1	131.9	159.6	178.6	85.5	119.1	146.9	164.6	75.7	105.7	132.3	154.0	68.9	95.9	120.1	145.1	63.4	88.5	110.7	136.9	59.0	82.4	103.2	128.7	55.6*	77.6*	97.0*	118.6*	177
45	118.9	143.9	174.2	194.8	94.3	128.1	155.0	173.4	80.5	112.3	140.5	159.6	71.5	99.5	124.7	149.3	64.8	90.5	113.1	140.7	59.8	83.2	104.5	132.5	55.8	77.6	97.2	124.1	52.4*	73.0*	91.6*	105.4*	172
50	112.7	140.1	169.6	189.8	89.5	124.7	150.8	168.8	76.5	106.5	133.3	155.4	67.7	94.5	118.3	145.3	61.4	85.7	107.3	136.7	56.6	79.0	99.0	126.7	52.8	73.6	92.2	118.0	49.6*	69.4*	86.8*	94.8*	166
55	107.5	136.9	165.6	185.2	85.3	118.9	147.3	164.8	72.9	101.5	127.1	151.8	64.7	90.1	112.7	141.7	58.6	81.7	102.3	130.9	54.0	75.4	94.4	120.7	50.4	70.2	88.0	109.6	47.4*	66.0*	82.8*	86.2*	161
60	102.9	133.9	162.0	181.4	81.7	113.9	142.5	161.2	69.7	97.1	121.7	148.3	61.9	86.3	107.9	138.1	56.0	78.3	98.1	125.3	51.8	72.2	90.4	115.5	48.2*	67.2*	84.2*	100.4*	N/A	N/A	N/A	N/A	156
70	95.3	128.9	155.8	174.4	75.5	105.3	131.9	155.2	64.5	89.9	112.7	142.7	57.3	79.9	99.9	127.7	51.8	72.4	90.7	116.1	47.8	66.8	83.6	107.0	44.6*	62.2*	78.0*	86.2*	N/A	N/A	N/A	N/A	147
80	89.1	124.3	150.8	168.8	70.7	98.5	123.3	150.0	60.3	84.1	105.3	134.7	53.4	74.7	93.5	119.5	48.6	67.6	84.8	108.5	44.8	62.4	78.2	99.2	41.8*	58.2*	73.0*	75.4*	N/A	N/A	N/A	N/A	143
90	84.1	117.1	146.3	163.8	66.7	92.9	116.3	145.5	56.9	79.3	99.3	127.1	50.4	70.3	88.1	112.7	45.8	63.8	80.0	102.3	42.2*	58.8*	73.6*	88.0*	N/A	N/A	N/A	N/A	N/A	N/A	N/A	N/A	137
100	79.7	111.1	139.1	159.6	63.3	88.1	110.3	141.1	53.9	75.3	94.3	120.5	47.8	66.7	83.5	106.9	43.4	60.6	75.8	97.0	40.0*	55.8*	70.0*	79.2*	N/A	N/A	N/A	N/A	N/A	N/A	N/A	N/A	133
110	75.9	105.9	132.5	155.8	60.3	84.1	105.1	134.5	51.5	71.7	89.9	114.9	45.6	63.6	79.7	101.9	41.4	57.6	72.2	92.4	38.2*	53.2*	66.6*	72.0*	N/A	N/A	N/A	N/A	N/A	N/A	N/A	N/A	127
120	72.7	101.5	126.9	152.4	57.7	80.5	100.7	128.7	49.3	68.7	86.1	109.9	43.6	60.8	76.2	97.5	39.6	55.2	69.2	88.4	36.5*	51.0*	63.8*	66.0*	N/A	N/A	N/A	N/A	N/A	N/A	N/A	N/A	124
130	69.9	97.5	121.9	149.3	55.5	77.3	96.7	123.7	47.2	66.1	82.7	105.7	41.8	58.4	73.2	93.7	38.0	53.0	66.4	83.8	35.1*	49.0*	61.0*	61.0*	N/A	N/A	N/A	N/A	N/A	N/A	N/A	N/A	122
140	67.3	93.9	117.5	146.5	53.5	74.5	93.3	119.3	45.6	63.5	79.7	101.9	40.4	56.4	70.6	90.3	36.7*	51.2*	64.0*	77.8*	N/A	N/A	N/A	N/A	N/A	N/A	N/A	N/A	N/A	N/A	N/A	N/A	117
150	65.1	90.7	113.5	144.1	51.7	71.9	90.1	115.1	44.0	61.5	76.9	98.3	39.0	54.4	68.2	87.2	35.5*	49.4*	61.8*	72.6*	N/A	N/A	N/A	N/A	N/A	N/A	N/A	N/A	N/A	N/A	N/A	N/A	114
160	62.9	87.9	109.9	140.5	49.9	69.7	87.3	111.5	42.6	59.5	74.5	95.3	37.9	52.6	66.0	84.4	34.3*	47.8*	59.8*	68.0*	N/A	N/A	N/A	N/A	N/A	N/A	N/A	N/A	N/A	N/A	N/A	N/A	111
170	61.1	85.1	106.7	136.3	48.5	67.5	84.5	108.1	41.2	57.7	72.3	92.3	36.7	51.0	64.0	81.8	33.3*	46.4*	58.0*	64.0*	N/A	N/A	N/A	N/A	N/A	N/A	N/A	N/A	N/A	N/A	N/A	N/A	107
180	59.3	82.7	103.7	132.5	47.1	65.7	82.3	105.1	40.2	56.1	70.3	89.7	35.7	49.6	62.2	79.6	32.3*	45.0*	56.4*	60.4*	N/A	N/A	N/A	N/A	N/A	N/A	N/A	N/A	N/A	N/A	N/A	N/A	105
190	57.9	80.5	100.9	128.9	45.9	63.9	80.1	102.3	39.0	54.4	68.3	87.3	34.7	48.4	60.6	77.4	31.5*	43.8*	55.0*	57.2*	N/A	N/A	N/A	N/A	N/A	N/A	N/A	N/A	N/A	N/A	N/A	N/A	102
200	56.3	78.5	98.3	125.7	44.7	62.3	77.9	99.7	38.0	53.0	66.7	85.1	33.9	47.0	59.0	75.4	N/A	N/A	N/A	N/A	N/A	N/A	N/A	N/A	N/A	N/A	N/A	N/A	N/A	N/A	N/A	N/A	100
210	54.9	76.7	95.9	122.7	43.7	60.7	76.1	97.3	37.3	51.8	64.8	83.1	33.1*	46.0*	57.6*	73.6*	N/A	N/A	N/A	N/A	N/A	N/A	N/A	N/A	N/A	N/A	N/A	N/A	N/A	N/A	N/A	N/A	97
220	53.7	74.9	93.7	119.9	42.5	59.3	74.3	95.1	36.3	50.6	63.4	81.1	32.3*	44.8*	56.2*	72.0*	N/A	N/A	N/A	N/A	N/A	N/A	N/A	N/A	N/A	N/A	N/A	N/A	N/A	N/A	N/A	N/A	95

* FOR INTERPOLATION ONLY (MAXIMUM WIDTH GOVERNS)

NOTES: "SB" = STORM BAR, SB #1 = 3", SB #2 = 3" WITH INSERT, SB #3 = 4", & SB #4 = 4" WITH INSERT

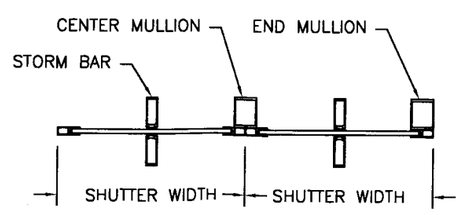

TWO SPANS

PRODUCT REVIEWED
as complying with the Florida Building Code
Acceptance No. 05-0725-13
Expiration Date 07/15/07
By
Miami Dade Product Control Division

Roll-a-way® STORM AND SECURITY SHUTTERS
10601 OAK STREET N.E.
ST. PETERSBURG, FL 33716

COPYRIGHT © 2002
VALCO ENTERPRISES, LTD.

DRAWING TITLE:
US60 DADE COUNTY
PRODUCT APPROVAL

D.L. Fowler
Professional Engineer
Florida License No.
PE0050458

7-12-05

DRAWN:	DJN
DATE:	03-15-02
APPROVED:	DF
DATE:	7-8-05
DRAWING NO:	3-01-024
SIZE: B	REV: -
SCALE:	3/8" = 1'-0"
SHEET:	17 OF 19

APPLICATION CHARTS FOR THREE SPAN SHUTTERS (MAX. LIMITS)

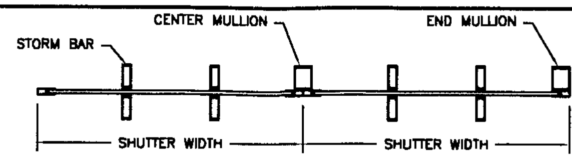

THREE SPANS

PRODUCT REVISED
as complying with the Florida
Building Code
Acceptance No. 05-0725.13
Expiration Date 07/15/07
By [signature]
Miami Dade Product Control
Division

HEADER #1, THREE SPANS

MAXIMUM ALLOWABLE UNIT HEIGHTS, FOR GIVEN PRESSURE & UNIT WIDTH, PER TOTAL SYSTEM DEFLECTION LESS THAN 2"

DESIGN PRESSURE, PSF	70" UNIT WIDTH				90" UNIT WIDTH				110" UNIT WIDTH				130" UNIT WIDTH				150" UNIT WIDTH				170" UNIT WIDTH				190" UNIT WIDTH				210" UNIT WIDTH				230" UNIT WIDTH				MAX. UNIT WIDTH
	SB #1	SB #2	SB #3	SB #4	SB #1	SB #2	SB #3	SB #4	SB #1	SB #2	SB #3	SB #4	SB #1	SB #2	SB #3	SB #4	SB #1	SB #2	SB #3	SB #4	SB #1	SB #2	SB #3	SB #4	SB #1	SB #2	SB #3	SB #4	SB #1	SB #2	SB #3	SB #4	SB #1	SB #2	SB #3	SB #4	
30	131.9	153.2	184.6	206.2	120.5	139.3	167.2	185.8	108.7	125.5	135.9	135.9	96.3	96.3	96.3	96.3	71.7	71.7	71.7	71.7	55.5	55.5	55.5	55.5	42.3	42.9	43.1	43.3	28.8	29.0	29.0	29.0	20.0	20.2	20.2	20.2	263
35	126.7	147.1	177.2	197.8	111.9	133.5	159.8	177.0	100.7	116.5	116.5	116.5	82.5	82.5	82.5	82.5	61.5	61.5	61.5	61.5	47.5	47.5	47.5	47.5	36.8	37.0	37.2	37.2	24.8	24.8	25.0	25.0	17.2	17.2	17.2	17.2	255
40	119.9	141.9	171.0	190.8	104.7	128.3	153.6	154.8	94.1	101.9	101.9	101.9	72.1	72.1	72.1	72.1	53.7	53.7	53.7	53.7	41.5	41.5	41.5	41.5	32.4	32.4	32.6	32.6	21.8	21.8	21.8	21.8	15.0	15.0	15.0	15.0	243
45	113.1	137.5	165.6	184.8	98.7	124.1	137.5	137.5	88.7	90.5	90.5	90.5	64.1	64.1	64.1	64.1	47.7	47.7	47.7	47.7	37.0	37.0	37.0	37.0	28.8	29.0	29.0	29.0	19.4	19.4	19.4	19.4	13.4	13.4	13.4	13.4	235
50	107.3	133.7	161.0	179.6	93.7	120.1	123.7	123.7	81.5	81.5	81.5	81.5	57.7	57.7	57.7	57.7	42.9	42.9	42.9	42.9	33.4	33.4	33.4	33.4	26.0	26.0	26.2	26.2	17.4	17.4	17.4	17.4	12.0*	12.0*	12.0*	12.0*	228
55	102.3	130.3	157.0	175.0	89.3	112.5	112.5	112.5	74.1	74.1	74.1	74.1	52.5	52.5	52.5	52.5	39.1	39.1	39.1	39.1	30.2	30.2	30.2	30.2	23.6	23.8	23.8	23.8	15.8	15.8	15.8	15.8	11.0*	11.0*	11.0*	11.0*	220
60	97.9	127.3	153.2	170.8	85.5	103.1	103.1	103.1	67.9	67.9	67.9	67.9	48.1	48.1	48.1	48.1	35.8	35.8	35.8	35.8	27.8	27.8	27.8	27.8	21.8	21.8	21.8	21.8	14.6	14.6	14.6	14.6	10.0*	10.0*	10.0*	10.0*	213
70	90.7	122.1	146.7	150	79.1	88.3	88.3	88.3	58.1	58.1	58.1	58.1	41.1	41.1	41.1	41.1	30.8	30.8	30.8	30.8	23.8	23.8	23.8	23.8	18.6	18.6	18.6	18.6	12.4*	12.4*	12.4*	12.4*	N/A	N/A	N/A	N/A	203
80	84.9	117.7	131.3	131.3	74.1	77.3	77.3	77.3	50.9	50.9	50.9	50.9	36.2	36.2	36.2	36.2	27.0	27.0	27.0	27.0	20.8	20.8	20.8	20.8	16.4	16.4	16.4	16.4	11.0*	11.0*	11.0*	11.0	N/A	N/A	N/A	N/A	195
90	79.9	111.5	116.7	116.7	68.7	68.7	68.7	68.7	45.3	45.3	45.3	45.3	32.2	32.2	32.2	32.2	24.0	24.0	24.0	24.0	18.6	18.6	18.6	18.6	14.6*	14.6*	14.6*	14.6*	N/A	N/A	N/A	N/A	N/A	N/A	N/A	N/A	186
100	75.9	104.9	104.9	104.9	61.9	61.9	61.9	61.9	40.7	40.7	40.7	40.7	29.0	29.0	29.0	29.0	21.6	21.6	21.6	21.6	16.6	16.6	16.6	16.6	13.0*	13.0*	13.0*	13.0*	N/A	N/A	N/A	N/A	N/A	N/A	N/A	N/A	180
110	72.3	95.3	95.3	95.3	56.3	56.3	56.3	56.3	37.0	37.0	37.0	37.0	26.2	26.2	26.2	26.2	19.6	19.6	19.6	19.6	15.2	15.2	15.2	15.2	11.8*	11.8*	12.0*	12.0*	N/A	N/A	N/A	N/A	N/A	N/A	N/A	N/A	175
120	69.3	87.5	87.5	87.5	51.5	51.5	51.5	51.5	34.0	34.0	34.0	34.0	24.0	24.0	24.0	24.0	18.0	18.0	18.0	18.0	13.7	13.7	13.7	13.7	N/A	N/A	N/A	N/A	N/A	N/A	N/A	N/A	N/A	N/A	N/A	N/A	170
130	66.5	80.7	80.7	80.7	47.5	47.5	47.5	47.5	31.4	31.4	31.4	31.4	22.2	22.2	22.2	22.2	16.6	16.6	16.6	16.6	12.7*	12.7*	12.7*	12.7*	N/A	N/A	N/A	N/A	N/A	N/A	N/A	N/A	N/A	N/A	N/A	N/A	166
140	64.1	74.9	74.9	74.9	44.1	44.1	44.1	44.1	29.2	29.2	29.2	29.2	20.6	20.6	20.6	20.6	15.4	15.4	15.4	15.4	11.9*	11.9*	11.9*	11.9*	N/A	N/A	N/A	N/A	N/A	N/A	N/A	N/A	N/A	N/A	N/A	N/A	162
150	61.9	69.9	69.9	69.9	41.1	41.1	41.1	41.1	27.2	27.2	27.2	27.2	19.2	19.2	19.2	19.2	14.4	14.4	14.4	14.4	11.1*	11.1*	11.1*	11.1*	N/A	N/A	N/A	N/A	N/A	N/A	N/A	N/A	N/A	N/A	N/A	N/A	157
160	59.9	65.5	65.5	65.5	38.7	38.7	38.7	38.7	25.6	25.6	25.6	25.6	18.0	18.0	18.0	18.0	13.3	13.3	13.3	13.3	10.3*	10.3*	10.3*	10.3*	N/A	N/A	N/A	N/A	N/A	N/A	N/A	N/A	N/A	N/A	N/A	N/A	156
170	58.1	61.7	61.7	61.7	36.4	36.4	36.4	36.4	24.0	24.0	24.0	24.0	17.0	17.0	17.0	17.0	12.5	12.5	12.5	12.5	9.7 *	9.7 *	9.7 *	9.7 *	N/A	N/A	N/A	N/A	N/A	N/A	N/A	N/A	N/A	N/A	N/A	N/A	153
180	56.5	58.3	58.3	58.3	34.4	34.4	34.4	34.4	22.6	22.6	22.6	22.6	16.0	16.0	16.0	16.0	11.9*	11.9*	11.9*	11.9*	N/A	N/A	N/A	N/A	N/A	N/A	N/A	N/A	N/A	N/A	N/A	N/A	N/A	N/A	N/A	N/A	149
190	54.9	55.1	55.1	55.1	32.6	32.6	32.6	32.6	21.4	21.4	21.4	21.4	15.2	15.2	15.2	15.2	11.3*	11.3*	11.3*	11.3*	N/A	N/A	N/A	N/A	N/A	N/A	N/A	N/A	N/A	N/A	N/A	N/A	N/A	N/A	N/A	N/A	146
200	52.5	52.5	52.5	52.5	31.0	31.0	31.0	31.0	20.4	20.4	20.4	20.4	14.4	14.4	14.4	14.4	10.7*	10.7*	10.7*	10.7*	N/A	N/A	N/A	N/A	N/A	N/A	N/A	N/A	N/A	N/A	N/A	N/A	N/A	N/A	N/A	N/A	145
210	49.9	49.9	49.9	49.9	29.4	29.4	29.4	29.4	19.4	19.4	19.4	19.4	13.7	13.7	13.7	13.7	10.1*	10.1*	10.1*	10.1*	N/A	N/A	N/A	N/A	N/A	N/A	N/A	N/A	N/A	N/A	N/A	N/A	N/A	N/A	N/A	N/A	143
220	47.7	47.7	47.7	47.7	28.2	28.2	28.2	28.2	18.6	18.6	18.6	18.6	13.1	13.1	13.1	13.1	9.7 *	9.7 *	9.7 *	9.7 *	N/A	N/A	N/A	N/A	N/A	N/A	N/A	N/A	N/A	N/A	N/A	N/A	N/A	N/A	N/A	N/A	140

HEADER #2, THREE SPANS

MAXIMUM ALLOWABLE UNIT HEIGHTS, FOR GIVEN PRESSURE & UNIT WIDTH, PER TOTAL SYSTEM DEFLECTION LESS THAN 2"

DESIGN PRESSURE, PSF	70" UNIT WIDTH				90" UNIT WIDTH				110" UNIT WIDTH				130" UNIT WIDTH				150" UNIT WIDTH				170" UNIT WIDTH				190" UNIT WIDTH				210" UNIT WIDTH				230" UNIT WIDTH				MAX. UNIT WIDTH
	SB #1	SB #2	SB #3	SB #4	SB #1	SB #2	SB #3	SB #4	SB #1	SB #2	SB #3	SB #4	SB #1	SB #2	SB #3	SB #4	SB #1	SB #2	SB #3	SB #4	SB #1	SB #2	SB #3	SB #4	SB #1	SB #2	SB #3	SB #4	SB #1	SB #2	SB #3	SB #4	SB #1	SB #2	SB #3	SB #4	
30	133.1	154.8	187.0	209.2	120.9	143.5	173.2	193.6	108.7	134.3	161.6	180.0	99.5	125.5	150.2	166.8	92.3	116.3	137.7	150.2	86.5	105.9	116.1	116.1	81.7	92.5	92.5	92.5	72.5	75.5	75.5	75.5	59.7	62.7	62.7	62.7	263
35	127.9	148.9	179.8	201.2	111.9	137.9	166.4	185.8	100.7	128.7	154.8	172.6	92.1	119.9	143.3	159.0	85.5	110.5	128.7	128.7	80.1	99.5	99.5	99.5	75.7	79.3	79.3	79.3	64.7	64.7	64.7	64.7	53.3	53.7	53.7	53.7	255
40	119.9	143.9	173.8	194.4	104.7	133.3	160.6	179.4	94.1	124.1	149.1	166.2	86.1	115.3	137.5	151.2	79.9	105.7	112.5	112.5	74.9	87.1	87.1	87.1	69.3	69.3	69.3	69.3	56.5	56.5	56.5	56.5	46.8	46.8	46.8	46.8	243
45	113.1	139.7	168.6	188.6	98.7	129.1	155.8	173.8	88.7	120.1	144.1	160.6	81.3	111.3	132.5	134.3	75.3	100.1	100.1	100.1	70.7	77.3	77.3	77.3	61.7	61.7	61.7	61.7	50.3	50.3	50.2	50.2	41.6	41.6	41.6	41.6	235
50	107.3	135.9	164.2	183.6	93.7	125.7	151.4	169.0	84.1	116.7	139.9	155.8	77.1	107.3	120.9	120.9	71.5	90.1	90.1	90.1	66.9	69.7	69.7	69.7	55.5	55.5	55.5	55.5	45.2	45.2	45.2	45.2	37.5*	37.5*	37.5*	37.5*	228
55	102.3	132.7	160.2	179.2	89.3	122.5	147.5	164.8	80.3	111.9	136.1	151.6	73.5	102.3	109.9	109.9	68.1	81.9	81.9	81.9	63.3	63.3	63.3	63.3	50.5	50.5	50.5	50.5	41.0	41.0	41.0	41.0	34.1*	34.1*	34.1*	34.1*	220
60	97.9	129.7	156.8	175.2	85.5	119.1	144.1	161.0	76.9	107.1	132.7	142.3	70.3	98.1	100.7	100.7	65.3	75.1	75.1	75.1	58.1	58.1	58.1	58.1	46.3	46.2	46.2	46.2	37.7	37.7	37.7	37.7	31.3*	31.3*	31.3*	31.3*	213
70	90.7	124.7	150.6	168.4	79.1	110.3	138.1	154.4	71.1	99.1	121.9	121.9	65.1	86.3	86.3	86.3	60.5	64.3	64.3	64.3	49.7	49.7	49.7	49.7	39.4	39.4	39.4	39.4	32.3*	32.3*	32.3*	32.3*	N/A	N/A	N/A	N/A	203
80	84.9	118.1	145.5	162.6	74.1	103.1	129.1	148.7	66.5	92.7	106.7	106.7	60.9	75.5	75.5	75.5	56.3	56.3	56.3	56.3	43.4	43.4	43.4	43.4	34.7	34.7	34.7	34.7	28.3*	28.3*	28.3*	28.3*	N/A	N/A	N/A	N/A	195
90	79.9	111.5	139.5	157.8	69.7	97.3	121.7	143.9	62.7	87.3	94.7	94.7	57.5	67.1	67.1	67.1	49.9	49.9	49.9	49.9	38.6	38.6	38.6	38.6	30.7*	30.7*	30.7*	30.7*	N/A	N/A	N/A	N/A	N/A	N/A	N/A	N/A	186
100	75.9	105.7	132.3	153.4	66.1	92.3	115.5	129.5	59.5	82.9	85.3	85.3	54.5	60.3	60.3	60.3	44.9	44.9	44.8	44.8	34.7	34.7	34.7	34.7	27.7*	27.7*	27.7*	27.7*	N/A	N/A	N/A	N/A	N/A	N/A	N/A	N/A	180
110	72.3	100.7	126.1	149.5	63.1	87.9	110.1	117.7	56.7	77.5	77.5	77.5	51.9	54.9	54.9	54.9	40.8	40.8	40.8	40.8	31.7	31.7	31.7	31.7	25.1*	25.1*	25.1*	25.1*	N/A	N/A	N/A	N/A	N/A	N/A	N/A	N/A	175
120	69.3	96.5	120.7	146.3	60.5	84.3	105.5	107.9	54.3	71.1	71.1	71.1	49.7	50.3	50.3	50.3	37.5	37.5	37.5	37.5	28.9	28.9	28.9	28.9	N/A	N/A	N/A	N/A	N/A	N/A	N/A	N/A	N/A	N/A	N/A	N/A	170
130	66.5	92.7	116.1	143.1	58.1	80.9	99.7	99.7	52.1	65.5	65.5	65.5	46.5	46.5	46.5	46.5	34.5	34.5	34.5	34.5	26.7*	26.7*	26.7*	26.7*	N/A	N/A	N/A	N/A	N/A	N/A	N/A	N/A	N/A	N/A	N/A	N/A	166
140	64.1	89.3	111.9	140.3	55.9	77.9	92.5	92.5	50.3	60.9	60.9	60.9	43.1	43.1	43.0	43.0	32.1	32.1	32.1	32.1	24.9*	24.9*	24.9*	24.9*	N/A	N/A	N/A	N/A	N/A	N/A	N/A	N/A	N/A	N/A	N/A	N/A	162
150	61.9	86.3	108.1	137.9	54.1	75.3	86.3	86.3	48.5	56.9	56.9	56.9	40.3	40.2	40.2	40.2	29.9	29.9	29.9	29.9	23.1*	23.1*	23.1*	23.1*	N/A	N/A	N/A	N/A	N/A	N/A	N/A	N/A	N/A	N/A	N/A	N/A	157
160	59.9	83.5	104.5	133.7	52.3	72.9	80.9	80.9	47.1	53.3	53.3	53.3	37.7	37.7	37.7	37.7	28.1	28.1	28.1	28.1	21.7*	21.7*	21.7*	21.7*	N/A	N/A	N/A	N/A	N/A	N/A	N/A	N/A	N/A	N/A	N/A	N/A	156
170	58.1	81.1	101.5	129.3	50.7	70.7	76.1	76.1	45.5	50.1	50.1	50.1	35.5	35.5	35.5	35.5	26.5	26.5	26.5	26.5	20.5*	20.5*	20.5*	20.5*	N/A	N/A	N/A	N/A	N/A	N/A	N/A	N/A	N/A	N/A	N/A	N/A	153
180	56.5	78.7	98.7	122.1	49.3	68.7	71.9	71.9	44.3	47.3	47.3	47.3	33.5	33.5	33.5	33.5	24.9*	24.9*	24.9*	24.9*	N/A	N/A	N/A	N/A	N/A	N/A	N/A	N/A	N/A	N/A	N/A	N/A	N/A	N/A	N/A	N/A	149
190	54.9	76.7	95.9	115.5	47.9	66.9	68.1	68.1	43.1	44.9	44.9	44.9	31.7	31.7	31.7	31.7	23.7*	23.7*	23.7*	23.7*	N/A	N/A	N/A	N/A	N/A	N/A	N/A	N/A	N/A	N/A	N/A	N/A	N/A	N/A	N/A	N/A	146
200	53.7	74.7	93.5	109.9	46.7	64.7	64.7	64.7	42.1	42.7	42.7	42.6	30.1	30.1	30.1	30.1	22.5*	22.5*	22.5*	22.5*	N/A	N/A	N/A	N/A	N/A	N/A	N/A	N/A	N/A	N/A	N/A	N/A	N/A	N/A	N/A	N/A	145
210	52.3	72.9	91.3	104.5	45.7	61.7	61.7	61.7	40.5	40.5	40.4	40.4	28.7	28.7	28.7	28.7	21.3*	21.3*	21.3*	21.3*	N/A	N/A	N/A	N/A	N/A	N/A	N/A	N/A	N/A	N/A	N/A	N/A	N/A	N/A	N/A	N/A	143
220	51.1	71.3	89.1	99.9	44.5	58.9	58.9	58.9	38.7	38.7	38.6	38.6	27.3	27.3	27.3	27.3	20.3*	20.3*	20.3*	20.3*	N/A	N/A	N/A	N/A	N/A	N/A	N/A	N/A	N/A	N/A	N/A	N/A	N/A	N/A	N/A	N/A	140

* FOR INTERPOLATION ONLY (MAXIMUM WIDTH GOVERNS)

NOTES: "SB" = STORM BAR, SB #1 = 3", SB #2 = 3" WITH INSERT, SB #3 = 4", & SB #4 = 4" WITH INSERT

Roll-a-way®
STORM AND SECURITY SHUTTERS
10601 OAK STREET N.E.
ST. PETERSBURG, FL 33716

COPYRIGHT © 2002
VALCO ENTERPRISES, LTD.

DRAWING TITLE:
US60 DADE COUNTY
PRODUCT APPROVAL

D.L. Fowler
Professional Engineer
Florida License No.
PE0050458
[signature] 7-12-05

DRAWN:	DJN
DATE:	03-15-02
APPROVED:	DF
DATE:	07-08-05
DRAWING NO:	3-01-024
SIZE: B	REV: -
SCALE:	3/8" = 1'-0"
SHEET:	18 OF 19

APPLICATION CHART FOR THREE SPAN SHUTTERS (MAX. LIMITS)

HEADER #3, THREE SPANS

MAXIMUM ALLOWABLE UNIT HEIGHTS. FOR GIVEN PRESSURE & UNIT WIDTH, PER TOTAL SYSTEM DEFLECTION LESS THAN 2"

DESIGN PRESSURE, PSF	70" UNIT WIDTH				90" UNIT WIDTH				110" UNIT WIDTH				130" UNIT WIDTH				150" UNIT WIDTH				170" UNIT WIDTH				190" UNIT WIDTH				210" UNIT WIDTH				230" UNIT WIDTH				MAX. UNIT WIDTH
	SB #1	SB #2	SB #3	SB #4	SB #1	SB #2	SB #3	SB #4	SB #1	SB #2	SB #3	SB #4	SB #1	SB #2	SB #3	SB #4	SB #1	SB #2	SB #3	SB #4	SB #1	SB #2	SB #3	SB #4	SB #1	SB #2	SB #3	SB #4	SB #1	SB #2	SB #3	SB #4	SB #1	SB #2	SB #3	SB #4	
30	133.3	155.2	187.6	210.0	120.9	144.5	174.6	195.4	108.7	136.3	164.4	183.8	99.5	129.1	155.6	173.6	92.3	122.7	147.1	164.0	86.5	116.1	138.7	153.8	81.7	109.3	129.5	142.7	77.5	101.7	119.1	130.1	74.1	93.1	106.9	115.5	263
35	128.3	149.3	180.4	202.0	111.9	138.9	168.0	187.8	100.7	130.9	158.0	176.6	92.1	123.9	149.1	166.6	85.5	117.5	140.9	156.8	80.1	110.9	132.1	146.5	75.7	103.9	122.7	135.1	71.9	96.1	111.9	121.9	68.4	86.9	99.1	105.1	255
40	119.9	144.3	174.4	195.2	104.7	134.3	162.4	181.4	94.1	126.5	152.6	170.4	86.1	119.7	143.9	160.6	79.9	111.5	135.5	150.8	74.9	104.5	126.7	140.3	70.7	98.5	116.9	128.5	67.0	91.1	105.5	110.7	64.0	81.7	91.8	91.8	243
45	113.1	140.1	169.4	189.6	98.7	130.3	157.6	176.2	88.7	122.7	147.9	165.2	81.3	113.3	139.3	155.4	75.3	105.1	130.9	145.5	70.7	98.5	121.9	134.7	66.7	92.9	111.9	120.7	63.2	86.9	98.5	98.5	60.4	77.1	81.6	81.6	235
50	107.3	136.5	165.0	184.6	93.7	126.9	153.4	171.4	84.1	117.3	143.9	160.6	77.1	107.3	134.5	150.8	71.5	99.7	124.7	140.9	66.9	93.3	116.9	130.1	63.2	88.1	107.5	108.7	60.0	83.1	88.5	88.4	57.2*	72.9*	73.4*	73.4*	228
55	102.3	133.1	161.0	180.2	89.3	123.9	149.5	167.2	80.3	111.9	139.9	156.6	73.5	102.3	128.1	146.7	68.1	95.1	118.9	136.7	63.9	89.1	111.5	123.9	60.2	84.1	98.7	98.7	57.2	79.7	80.4	80.4	54.6*	66.8*	66.8*	66.8*	220
60	97.9	130.3	157.6	176.2	85.5	119.1	146.1	163.6	76.9	107.1	134.1	153.0	70.3	98.1	122.7	143.1	65.3	90.9	113.9	133.1	61.1	85.3	106.7	113.7	57.6	80.5	90.5	90.5	54.8	73.6	73.6	73.6	52.2*	61.2*	61.2*	61.2*	213
70	90.7	125.3	151.6	169.4	79.1	110.3	138.1	157.2	71.1	99.1	124.1	146.7	65.1	90.7	113.7	136.9	60.5	84.3	105.5	125.9	56.6	78.9	97.3	97.3	53.4	74.5	77.4	77.4	50.6*	63.2*	63.2*	63.2*	N/A	N/A	N/A	N/A	203
80	84.9	118.1	146.3	163.8	74.1	103.1	129.1	151.8	66.5	92.7	116.1	141.5	60.9	84.9	106.3	131.7	56.5	78.7	98.7	110.1	52.8	73.7	85.1	85.1	49.8	67.8	67.8	67.8	47.4*	55.2*	55.2*	55.2*	N/A	N/A	N/A	N/A	195
90	79.9	111.5	139.5	159.0	69.7	97.3	121.7	147.1	62.7	87.3	109.5	137.1	57.5	80.1	100.1	127.1	53.2	74.3	92.9	97.9	49.8	69.5	75.6	75.6	47.0*	60.2*	60.2*	60.2*	N/A	N/A	N/A	N/A	N/A	N/A	N/A	N/A	186
100	75.9	105.7	132.3	154.8	66.1	92.3	115.5	143.1	59.5	82.9	103.7	132.7	54.5	75.9	95.1	118.3	50.4	70.5	88.1	88.1	47.2	65.8	68.0	68.0	44.6*	54.2*	54.2*	54.2*	N/A	N/A	N/A	N/A	N/A	N/A	N/A	N/A	180
110	72.3	100.7	126.1	151	63.1	87.9	110.1	139.5	56.7	79.1	98.9	126.5	51.9	72.3	90.7	107.5	48.0	67.1	80.1	80.1	45.0	61.8	61.8	61.8	42.6*	49.2*	49.2*	49.2*	N/A	N/A	N/A	N/A	N/A	N/A	N/A	N/A	175
120	69.3	96.5	120.7	147.7	60.5	84.3	105.5	134.7	54.3	75.7	94.7	121.1	49.6	69.3	86.7	98.5	46.0	64.3	73.3	73.2	43.2	56.6	56.6	56.6	N/A	N/A	N/A	N/A	N/A	N/A	N/A	N/A	N/A	N/A	N/A	N/A	170
130	66.5	92.7	116.1	144.7	58.1	80.9	101.3	129.5	52.1	72.7	91.1	116.3	47.6	66.5	83.3	90.9	44.2	61.6	67.6	67.6	41.4*	52.2*	52.2*	52.2*	N/A	N/A	N/A	N/A	N/A	N/A	N/A	N/A	N/A	N/A	N/A	N/A	166
140	64.1	89.3	111.9	141.9	55.9	77.9	97.5	124.7	50.3	70.1	87.7	112.1	46.0	64.1	80.3	84.5	42.6	59.4	62.8	62.8	39.8*	48.6*	48.6*	48.6*	N/A	N/A	N/A	N/A	N/A	N/A	N/A	N/A	N/A	N/A	N/A	N/A	162
150	61.9	86.3	108.1	138.1	54.1	75.3	94.3	120.5	48.5	67.7	84.7	108.3	44.4	61.9	77.5	78.7	41.2	57.4	58.6	58.6	38.6*	45.2*	45.2*	45.2*	N/A	N/A	N/A	N/A	N/A	N/A	N/A	N/A	N/A	N/A	N/A	N/A	157
160	59.9	83.5	104.5	133.7	52.3	72.9	91.3	116.7	47.1	65.5	82.1	104.3	43.0	59.9	73.9	73.9	39.8	55.0	55.0	55.0	37.5*	42.4*	42.4*	42.4*	N/A	N/A	N/A	N/A	N/A	N/A	N/A	N/A	N/A	N/A	N/A	N/A	156
170	58.1	81.1	101.5	129.7	50.7	70.7	88.5	113.3	45.5	63.5	79.5	98.1	41.6	58.1	69.5	69.4	38.6	51.6	51.6	51.6	36.3*	40.0*	40.0*	40.0*	N/A	N/A	N/A	N/A	N/A	N/A	N/A	N/A	N/A	N/A	N/A	N/A	153
180	56.5	78.7	98.7	126.1	49.3	68.7	86.1	110.1	44.2	61.7	77.3	92.7	40.4	56.4	65.6	65.6	37.7*	48.8*	48.8*	48.8*	N/A	N/A	N/A	N/A	N/A	N/A	N/A	N/A	N/A	N/A	N/A	N/A	N/A	N/A	N/A	N/A	149
190	54.9	76.7	95.9	122.7	47.9	66.9	83.7	107.1	43.0	60.1	75.3	87.9	39.4	55.0	62.0	62.0	36.7*	46.2*	46.2*	46.2*	N/A	N/A	N/A	N/A	N/A	N/A	N/A	N/A	N/A	N/A	N/A	N/A	N/A	N/A	N/A	N/A	146
200	53.7	74.7	93.5	119.7	46.7	65.3	81.7	104.3	42.0	58.5	73.3	83.5	38.4	53.6	59.0	59.0	35.7*	43.8*	43.8*	43.8*	N/A	N/A	N/A	N/A	N/A	N/A	N/A	N/A	N/A	N/A	N/A	N/A	N/A	N/A	N/A	N/A	145
210	52.3	72.9	91.3	116.7	45.7	63.7	79.7	101.9	41.0	57.1	71.5	79.5	37.5	52.2	56.2	56.2	34.9*	41.8*	41.8*	41.8*	N/A	N/A	N/A	N/A	N/A	N/A	N/A	N/A	N/A	N/A	N/A	N/A	N/A	N/A	N/A	N/A	143
220	51.1	71.3	89.1	114.1	44.5	62.1	77.9	99.5	40.0	55.9	69.9	75.9	36.7	51.0	53.6	53.6	34.1*	39.8*	39.8*	39.8*	N/A	N/A	N/A	N/A	N/A	N/A	N/A	N/A	N/A	N/A	N/A	N/A	N/A	N/A	N/A	N/A	140

* FOR INTERPOLATION ONLY (MAXIMUM WIDTH GOVERNS)

NOTES: "SB" = STORM BAR, SB #1 = 3", SB #2 = 3" WITH INSERT, SB #3 = 4", & SB #4 = 4" WITH INSERT

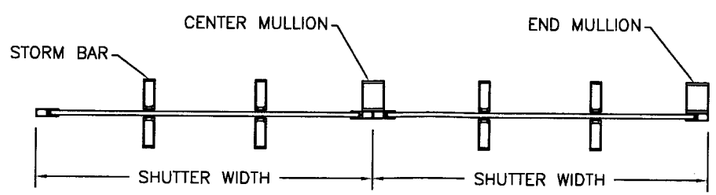

THREE SPANS

PRODUCT REVISED
In complying with the Florida Building Code
Acceptance No. 05-0725.13
Expiration Date 07/15/07
By M Thal
Miami Dade Product Control Division

Roll-a-way® STORM AND SECURITY SHUTTERS
10601 OAK STREET N.E.
ST. PETERSBURG, FL 33716

COPYRIGHT © 2002
VALCO ENTERPRISES, LTD.

DRAWING TITLE:

US60 DADE COUNTY
PRODUCT APPROVAL

D.L. Fowler
Professional Engineer
Florida License No.
PE0050458

7-12-05

DRAWN:	DJN
DATE:	03-15-02
APPROVED:	DT
DATE:	7-8-05
DRAWING NO:	3-01-024
SIZE: B	REV: -
SCALE:	3/8" = 1'-0"
SHEET:	19 OF 19