MIAMI-DADE COUNTY, FLORIDA
METRO-DADE FLAGLER BUILDING
140 WEST FLAGLER STREET, SUITE 1603
MIAMI, FLORIDA 33130-1563
(305) 375-2901 FAX (305) 375-2908
www.buildingcodeonline.com

BUILDING CODE COMPLIANCE OFFICE (BCCO)
PRODUCT CONTROL DIVISION

NOTICE OF ACCEPTANCE (NOA)

Bell-View, Inc.
150 Industrial Blvd.
Wrightsville, GA 31096

SCOPE:

This NOA is being issued under the applicable rules and regulations governing the use of construction materials. The documentation submitted has been reviewed by Miami-Dade County Product Control Division and accepted by the Board of Rules and Appeals (BORA) to be used in Miami Dade County and other areas where allowed by the Authority Having Jurisdiction (AHJ).

This NOA shall not be valid after the expiration date stated below. The Miami-Dade County Product Control Division (In Miami Dade County) and/or the AHJ (in areas other than Miami Dade County) reserve the right to have this product or material tested for quality assurance purposes. If this product or material fails to perform in the accepted manner, the manufacturer will incur the expense of such testing and the AHJ may immediately revoke, modify, or suspend the use of such product or material within their jurisdiction. BORA reserves the right to revoke this acceptance, if it is determined by Miami-Dade County Product Control Division that this product or material fails to meet the requirements of the applicable building code.

This product is approved as described herein, and has been designed to comply with the Florida Building Code, including the High Velocity Hurricane Zone.

DESCRIPTION: Series PA-9 Aluminum Sliding Glass Door

APPROVAL DOCUMENT: Drawing No.**W05-23**, titled "Series PA-9 Alum Sliding Glass Door (N.I.)", sheets 1 through 6 of 6, dated 05/18/05, with revision A dated 12/07/05, prepared by Al-Farooq Corporation, signed and sealed by Humayoun Farooq, P.E., bearing the Miami-Dade County Product Control Revision stamp with the Notice of Acceptance number and expiration date by the Miami-Dade County Product Control Division.

MISSILE IMPACT RATING: None

LABELING: Each unit shall bear a permanent label with the manufacturer's name or logo, city, state and following statement: "Miami-Dade County Product Control Approved", unless otherwise noted herein.

RENEWAL of this NOA shall be considered after a renewal application has been filed and there has been no change in the applicable building code negatively affecting the performance of this product.

TERMINATION of this NOA will occur after the expiration date or if there has been a revision or change in the materials, use, and/or manufacture of the product or process. Misuse of this NOA as an endorsement of any product, for sales, advertising or any other purposes shall automatically terminate this NOA. Failure to comply with any section of this NOA shall be cause for termination and removal of NOA.

ADVERTISEMENT: The NOA number preceded by the words Miami-Dade County, Florida, and followed by the expiration date may be displayed in advertising literature. If any portion of the NOA is displayed, then it shall be done in its entirety.

INSPECTION: A copy of this entire NOA shall be provided to the user by the manufacturer or its distributors and shall be available for inspection at the job site at the request of the Building Official.
This NOA **revises and supersedes NOA # 01-1018.04** and consists of this page 1 and evidence page E-1, as well as approval document mentioned above.
The submitted documentation was reviewed by **Manuel Perez, P.E.**

PRODUCT CONTROL ACCEPTED

NOA No 05-0726.03
Expiration Date: November 16, 2007
Approval Date: March 23, 2006

Bell-View, Inc.

NOTICE OF ACCEPTANCE: EVIDENCE SUBMITTED

A. DRAWINGS

1. Manufacturer's die drawings and sections.
2. Drawing No.**W05-23**, titled "Series PA-9 Alum Sliding Glass Door (N.I.)", sheets 1 through 6 of 6, dated 05/18/05, with revision A dated 12/07/05, prepared by Al-Farooq Corporation, signed and sealed by Humayoun Farooq, P.E.

B. TESTS

1. Test reports on 1) Air Infiltration Test, per PA 202-94
   2) Uniform Static Air Pressure Test, Loading per PA 202-94
   3) Water Resistance Test, per PA 202-94
   4) Forced Entry Test, per AAMA 1302.5 and PA 202-94.

   along with installation diagram and drawings prepared by Miami Testing Laboratory, Inc. No. MTL-16411, dated August 25, 1995 signed and sealed by David G. Ober, P.E. ***"Submitted under NOA# 01-1018.04"***

C. CALCULATIONS

1. Anchor verification calculations complying with FBC-2004 and comparative analysis, dated 07/01/05, revised on 02/21/06, prepared by Al-Farooq Corporation, signed and sealed by Humayoun Farooq, P.E. **Complies with ASTM E 1300-98**
2. Anchor Calculations, ASTM-E1300, and comparative analysis, prepared by Robt. E. Fisher - Wm. M. Meyers, P.E., Consulting Engineers, dated September 15, 1995, signed and sealed by William M. Meyers, P.E.
   Submitted under NOA# 01-1018.04"

D. QUALITY ASSURANCE

1. Miami Dade Building Code Compliance Office (BCCO).

E. MATERIAL CERTIFICATIONS

1. None

F. STATEMENTS

1. Statement letter of conformance, dated July 1, 2005, signed and sealed by Humayoun Farooq, P.E.
2. Statement letter of no financial interest, dated December 30, 1997, signed and sealed by Humayoun Farooq, P.E.
3. Bill of Sale transferring assets from Binnings Pan American to Bell-View, Inc. dated Sept. 9, 2002.

G. OTHER

1. Notice of Acceptance No. **01-1018.04,** issued to Binnings Pan American, Series PA-9 Alum Sliding Glass Door, approved on 12/06/01 and expiring on 01/16/06.

Manuel Perez, P.E.
Product Control Examiner
NOA No 05-0726.03
Expiration Date: November 16, 2007
Approval Date: March 23, 2006

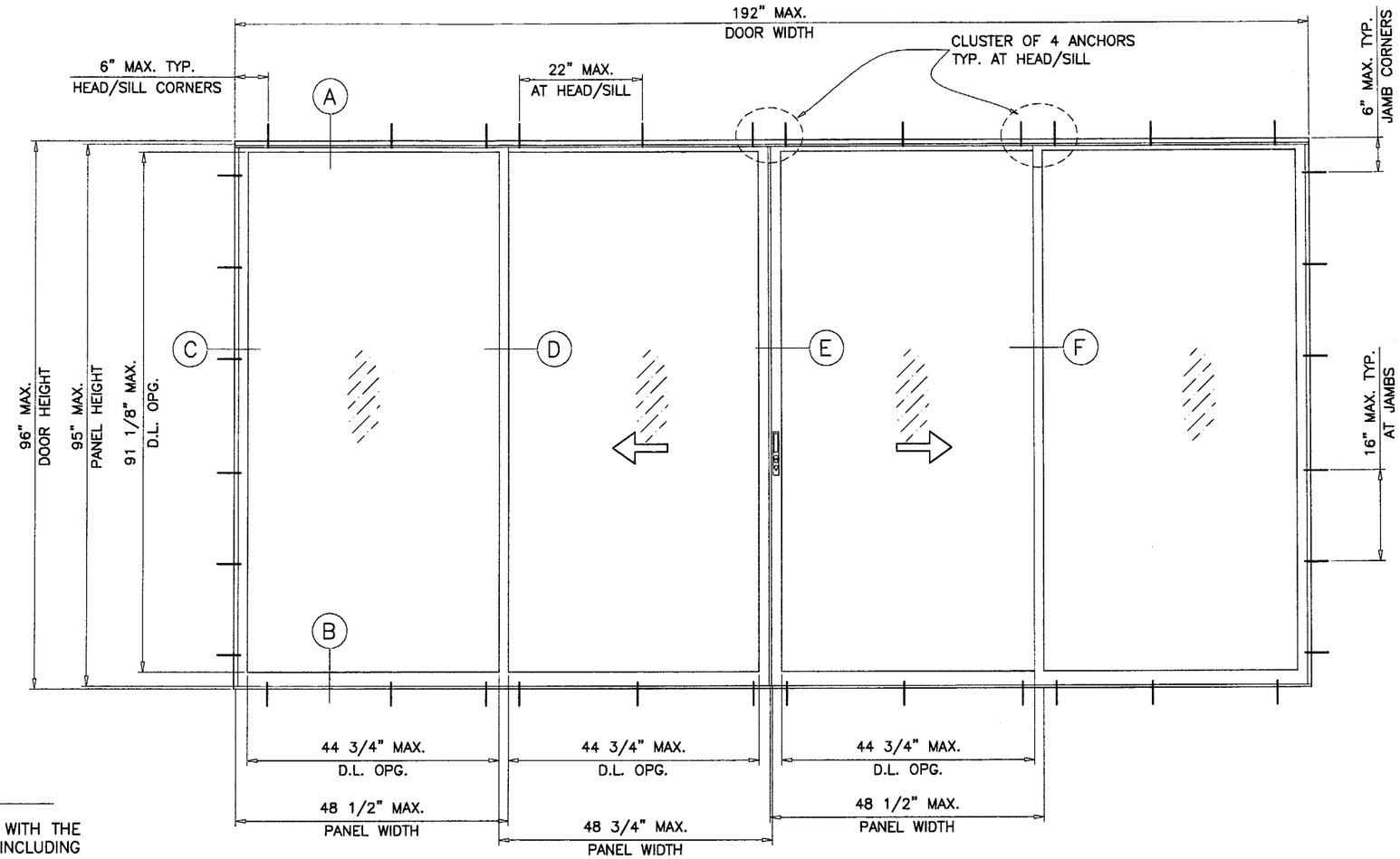

TYPICAL ELEVATION
TESTED UNIT (OXXO)

SERIES PA-9 ALUMINUM SLIDING GLASS DOOR

DESIGN LOAD RATING FOR DOORS TO BE AS PER CHARTS SHOWN ON SHEET 2.

THIS PRODUCT HAS BEEN DESIGNED AND TESTED TO COMPLY WITH THE REQUIREMENTS OF THE FLORIDA BUILDING CODE 2004 EDITION INCLUDING HIGH VELOCITY HURRICANE ZONE.

WOOD BUCKS BY OTHERS, MUST BE ANCHORED PROPERLY TO TRANSFER LOADS TO THE STRUCTURE.

ANCHORS SHALL BE AS LISTED, SPACED AS SHOWN ON DETAILS, ANCHORS EMBEDMENT TO BASE MATERIAL SHALL BE BEYOND WALL DRESSING OR STUCCO.

ANCHORING OR LOADING CONDITIONS NOT SHOWN IN THESE DETAILS ARE NOT PART OF THIS APPROVAL.

A LOAD DURATION INCREASE IN ALLOWABLE STRESS IS USED IN DESIGN OF WOOD ANCHORS ONLY.

ALL STEEL IN CONTACT WITH ALUMINUM TO BE PAINTED OR PLATED.

INSTALLATION OF THIS PRODUCT IN THE HVHZ AREA REQUIRES THE USE OF APPROVED SHUTTERS OR EXTERNAL PROTECTION DEVICES COMPLYING WITH HVHZ REQUIREMENTS.

INSTALLATION OF THIS SYSTEM OUTSIDE THE HVHZ AREA SHALL MEET THE APPLICABLE REQUIREMENTS FOR WIND BORNE DEBRIS PROTECTION.

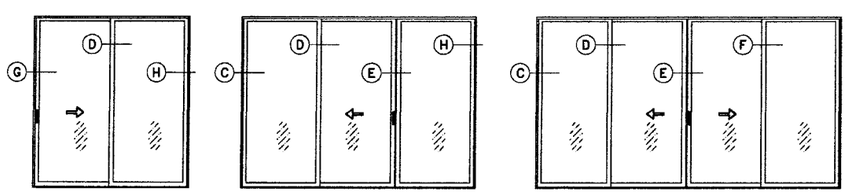

XO (SHOWN)
OX

OXO (SHOWN)

OXXO

APPROVED CONFIGURATIONS

TWO TRACK FRAME DOOR CONFIGURATIONS OF MORE THAN FOUR PANELS USING STILE COMBINATIONS SHOWN IN THESE DETAILS MAY ALSO BE APPROVED (EXAMPLE OOXXOO).

Engr: DR. HUMAYOUN FAROOQ
STRUCTURES
FLA. PE # 16557
C.A.N. 3538

FEB 2 1 2006

PRODUCT REVISED
as complying with the Florida
Building Code
Acceptance No 05-0726.03
Expiration Date NOV. 16, 2007
By Manuel Perez
Miami-Dade Product Control
Division

AL-FAROOQ CORPORATION
ENGINEERS, PLANNERS & PRODUCT DESIGN
1235 SW 87 AVE
MIAMI, FLORIDA 33174
TEL. (305) 264-8100 FAX. (305) 262-6978
COMP-ANL\W05-23BVI

SERIES PA-9 ALUM SLIDING GLASS DOOR (N.I.)

BELL-VIEW INC.
150 INDUSTRIAL BLVD.
WRIGHTSVILLE, GA. 31096
TEL. (478) 864-2227 FAX. (478) 864-2492

revisions:

no	date	by	description
A	12.07.05		REV. PER BCCO COMMENTS

date: 05-18-05
scale: 1/2"=1'-0"
dr. by: HAMID
chk. by:

drawing no.
W05-23

DESIGN LOAD CAPACITY – PSF					
PANEL WIDTH NOMINAL INCHES	DOOR HEIGHT INCHES	W/O REINFORCING		WITH REINFORCING	
		EXT.(+)	INT.(–)	EXT.(+)	INT.(–)
30	80	60.0	62.0	60.0	106.3
36		54.2	54.2	60.0	92.9
42		48.8	48.8	60.0	83.7
48		45.0	45.0	60.0	77.1
54		42.3	42.3	60.0	72.5
57		41.2	41.2	60.0	70.6
30	84	58.4	58.4	60.0	100.2
36		50.9	50.9	60.0	87.3
42		45.7	45.7	60.0	78.4
48		42.0	42.0	60.0	72.0
54		39.3	39.3	60.0	67.4
30	90	53.8	53.8	60.0	92.2
36		46.7	46.7	60.0	80.0
42		41.7	41.7	60.0	71.6
48		38.2	38.2	60.0	65.5
30	96	49.8	49.8	60.0	85.3
36		43.1	43.1	60.0	73.8
42		38.4	38.4	60.0	65.8
48		35.0	35.0	60.0	60.0

NOTE:
GLASS CAPACITIES ON THIS SHEET ARE BASED ON ASTM E1300–98 (60 SEC. WIND).

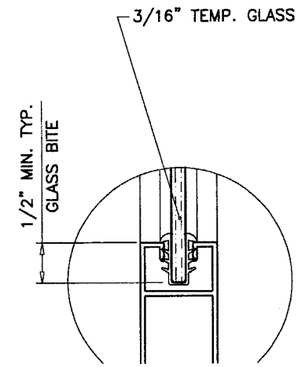

GLAZING DETAIL

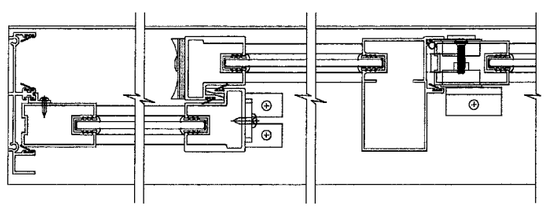

W/O REINFORCING

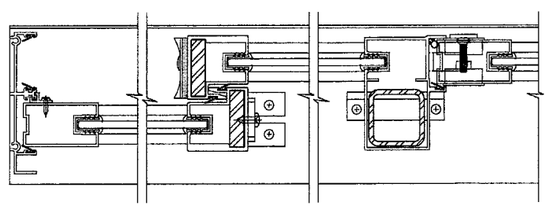

WITH REINFORCING

Engr: DR. HUMAYOUN FAROOQ
STRUCTURES
FLA. PE # 16557
C.A.N. 3538

FEB 2 1 2006

PRODUCT REVISED
as complying with the Florida
Building Code
Acceptance No. 05-0726.03
Expiration Date NOV. 16, 2007
By Manuel Perez
Miami-Dade Product Control
Division

AL-FAROOQ CORPORATION
ENGINEERS, PLANNERS & PRODUCT DESIGN
1235 SW 87 AVE
MIAMI, FLORIDA 33174
TEL. (305) 264-8100 FAX. (305) 262-6978
COMP-ANL\W05-23BVI

SERIES PA-9 ALUM SLIDING GLASS DOOR (N.I.)

BELL-VIEW INC.
150 INDUSTRIAL BLVD.
WRIGHTSVILLE, GA. 31096
TEL. (478) 864-2227 FAX. (478) 864-2492

revisions:

no	date	by	description
A	12.07.05		NO CHANGE THIS SHEET

date: 05-18-05
scale: 1/2"=1'-0"
dr. by: HAMID
chk. by:

drawing no.
W05-23

sheet 2 of 6

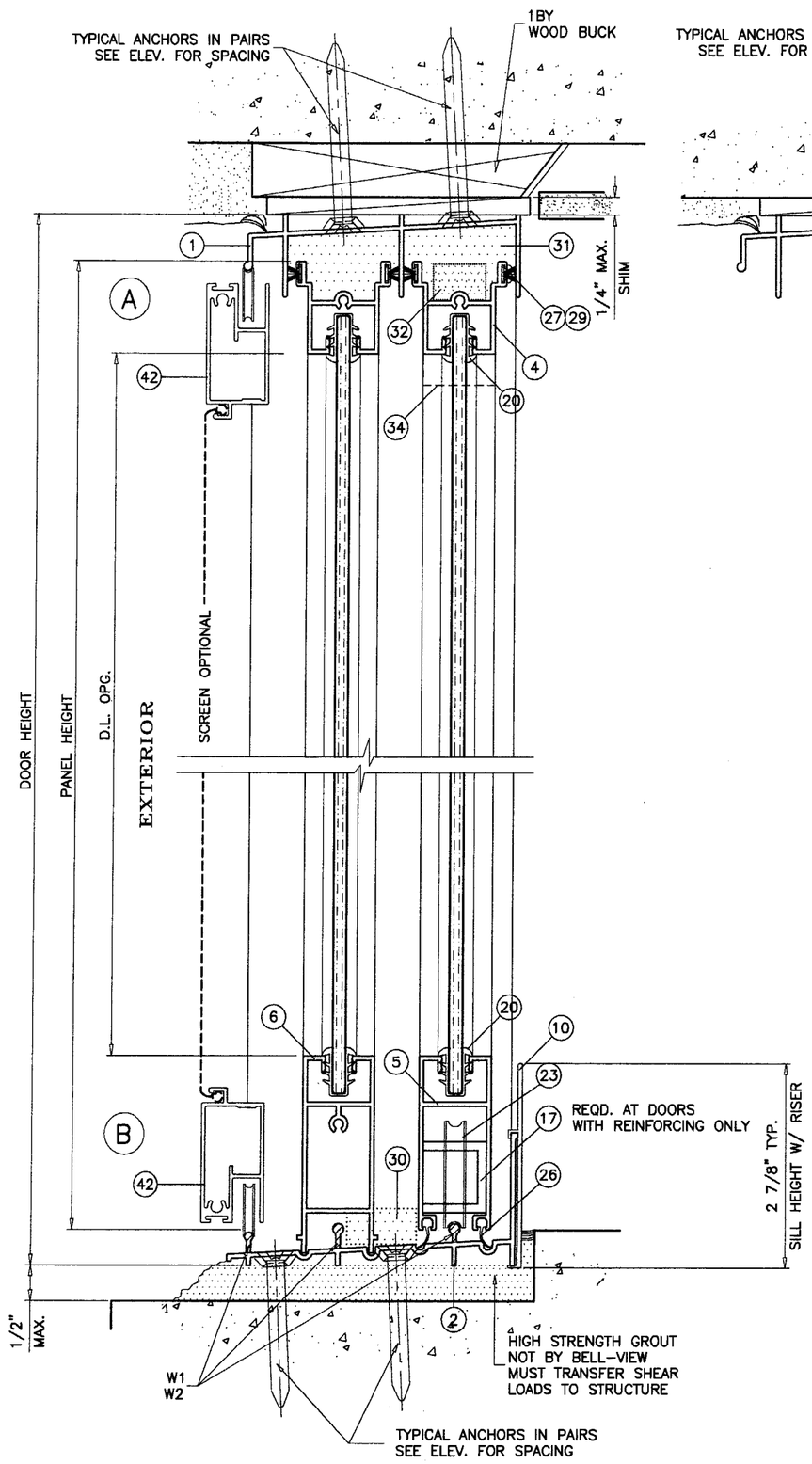

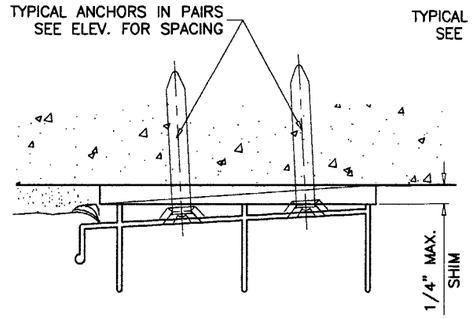

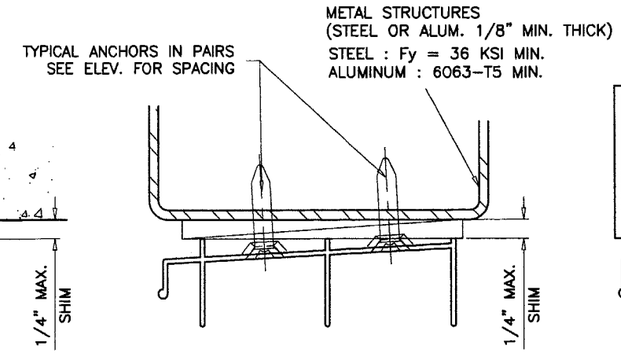

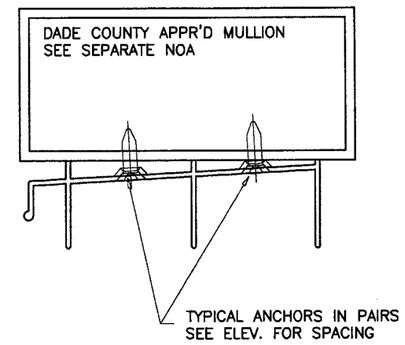

WOOD BUCKS AND METAL STRUCTURES NOT BY BELL-VIEW INC. MUST SUSTAIN LOADS IMPOSED BY GLAZING SYSTEM AND TRANSFER THEM TO THE BUILDING STRUCTURE.

TYPICAL ANCHORS: SEE ELEV. FOR SPACING

1/4" DIA. TAPCONS
INTO 2BY WOOD BUCKS OR WOOD STRUCTURES
1-3/8" MIN. PENETRATION INTO WOOD

THRU 1BY WOOD BUCKS INTO
3000 PSI MIN. CONC. AT HEAD/SILL
C-90 GROUT FILLED BLOCK AT JAMBS
1-1/4" MIN. EMBED INTO CONC. OR MASONRY

1/4" DIA. TAPCONS
DIRECTLY INTO
3000 PSI MIN. CONC. AT HEAD/SILL
C-90 GROUT FILLED BLOCK AT JAMBS
1-1/4" MIN. EMBED INTO CONC. OR MASONRY

#14 SMS
INTO METAL STRUCTURES (STEEL OR ALUMINUM 1/8" MIN. THICK.)
STEEL : Fy = 36 KSI MIN.
ALUMINUM : 6063-T5 MIN.
(STEEL IN CONTACT WITH ALUMINUM TO BE PLATED OR PAINTED)

#10 SMS
INTO APPROVED MULLIONS
(MIN. 1/8" THK. ALUMINUM 6063-T5)
(NO SHIM SPACE)

TYPICAL EDGE DISTANCE
INTO CONCRETE AND MASONRY = 2-1/2" MIN.
INTO WOOD STRUCTURE = 1" MIN.

SEALANT:

ALL JOINTS AND FRAME CONNECTIONS SEALED WITH WHITE/ALUMINUM COLORED SEALANT.

WEEPHOLES:

W1 = 2" LONG WEEP NOTCH AT EACH END
W2 = 1/4" X 1-1/4" WEEP SLOTS TWO PER PANEL

Engr: DR. HUMAYOUN FAROOQ
STRUCTURES
FLA. PE # 16557
C.A.N. 3538

FEB 2 1 2006

PRODUCT REVISED
to complying with the Florida
Building Code
Acceptance No. 05-0726.03
Expiration Date Nov. 16, 2007
By Manuel Perez
Miami-Dade Product Control
Division

AL-FAROOQ CORPORATION
ENGINEERS, PLANNERS & PRODUCT DESIGN
1235 SW 87 AVE
MIAMI, FLORIDA 33174
TEL. (305) 264-8100 FAX. (305) 262-6978
COMP-ANL\W05-23BVI

SERIES PA-9 ALUM SLIDING GLASS DOOR (N.I.)

BELL-VIEW INC.
150 INDUSTRIAL BLVD.
WRIGHTSVILLE, GA. 31096
TEL. (478) 864-2227 FAX. (478) 864-2492

revisions:

no	date	by	description
A	12.07.05		REV. PER BCCO COMMENTS

date: 05-18-05
scale: 1/2" = 1"
dr. by: HAMID
chk. by:

drawing no. W05-23

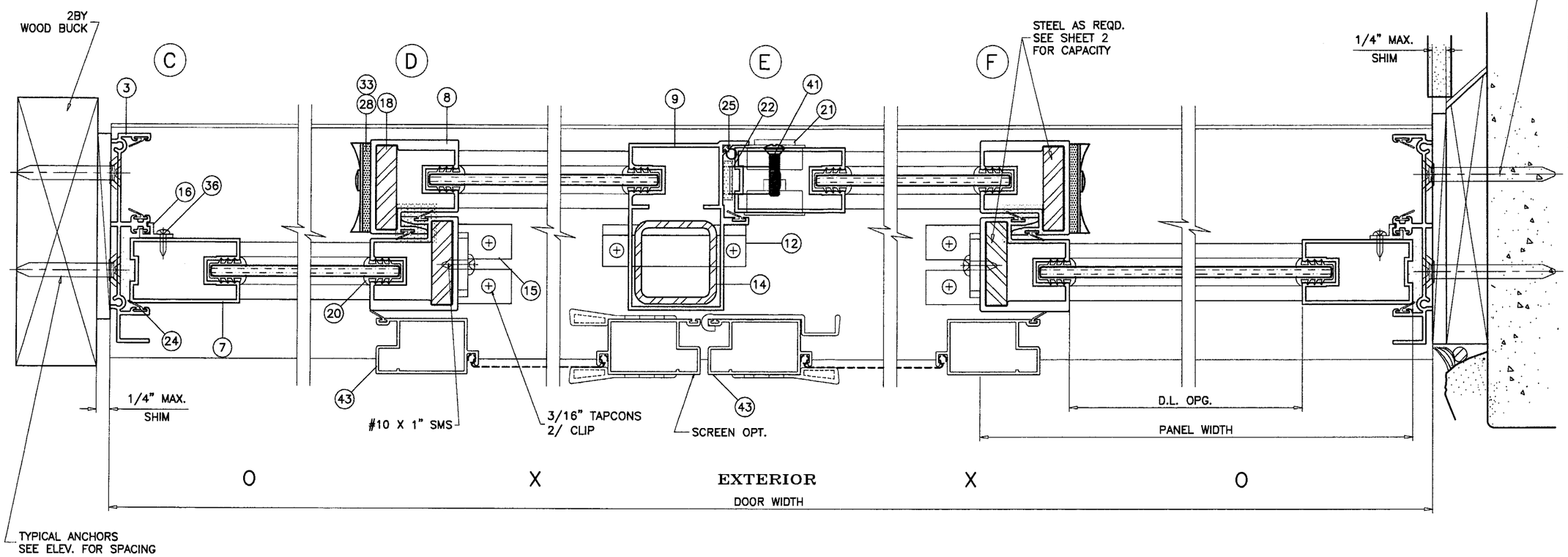

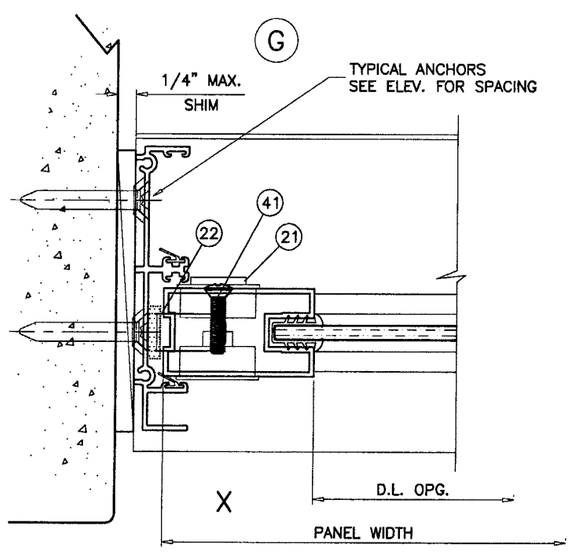

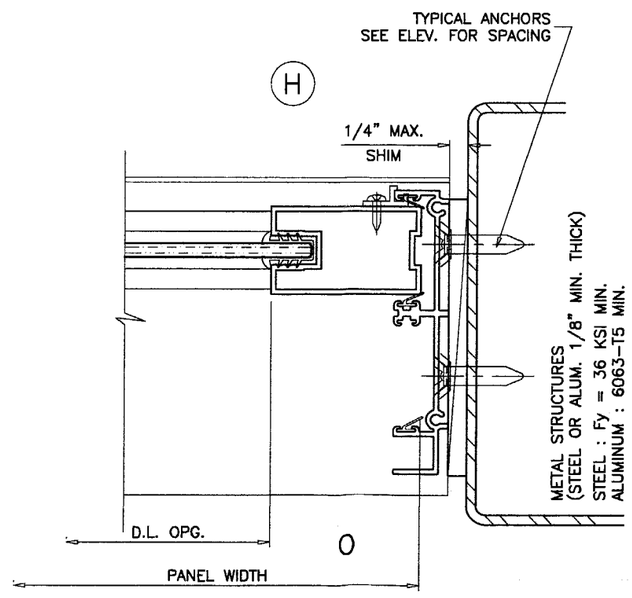

Engr: DR. HUMAYOUN FAROOQ
STRUCTURES
FLA. PE # 16557
C.A.N. 3538

FEB 2 1 2006

PRODUCT REVISED
as complying with the Florida
Building Code
Acceptance No. 05-0726.03
Expiration Date Nov. 16, 2007
By Manuel Perez
Miami-Dade Product Control
Division

AL-FAROOQ CORPORATION
ENGINEERS, PLANNERS & PRODUCT DESIGN
1235 SW 87 AVE
MIAMI, FLORIDA 33174
TEL. (305) 264-8100 FAX. (305) 262-6978
COMP-ANL\W05-23BVI

SERIES PA-9 ALUM SLIDING GLASS DOOR (N.I.)

BELL-VIEW INC.
150 INDUSTRIAL BLVD.
WRIGHTSVILLE, GA. 31096
TEL. (478) 864-2227 FAX. (478) 864-2492

revisions:

no	date	by	description
A	12.07.05		REV. PER BCCO COMMENTS

date: 05-18-05
scale: 1/2" = 1"
dr. by: HAMID
chk. by:

drawing no.
W05-23

sheet 4 of 6

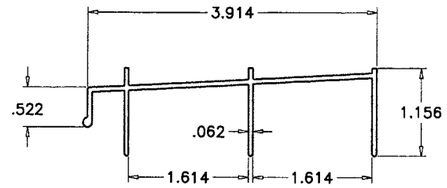

1 FRAME HEAD

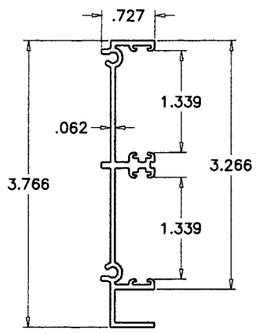

3 FRAME JAMB

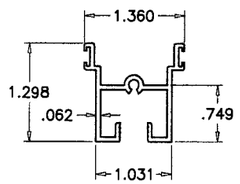

4 PANEL TOP RAIL

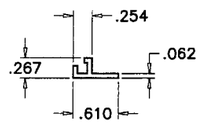

16 FIXED PANEL CLIP

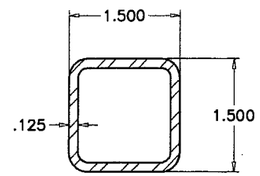

14 ASTRAGAL REINF.

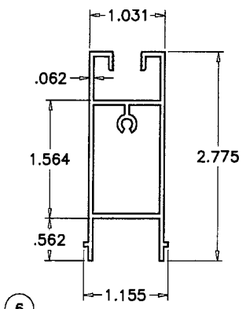

6 FIX. PANEL BOTTOM RAIL

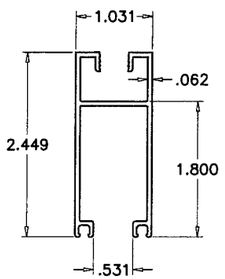

5 MOV. PANEL BOTTOM RAIL

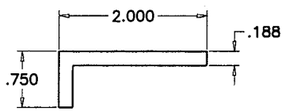

12 ASTRAGAL CLIP ANGLE

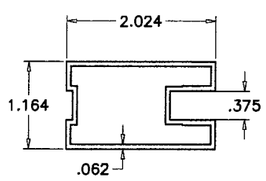

7 LOCK STILE

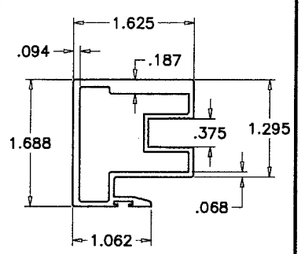

8 INTERLOCK

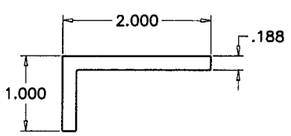

15 FIX. PANEL CLIP ANGLE

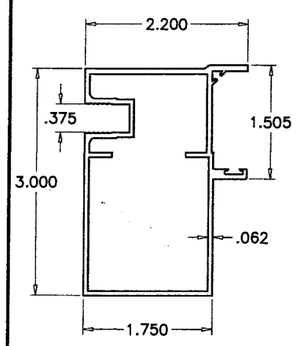

9 ASTRAGAL STILE

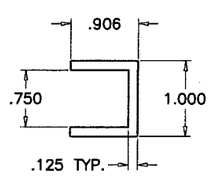

17 REINFORCING CHANNEL

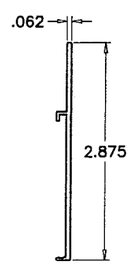

10 SILL RISER

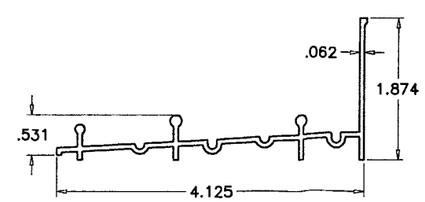

2 FRAME SILL

ITEM #	PART #	QUANTITY	DESCRIPTION	MATERIAL	MANF./SUPPLIER/REMARKS
1	9-101B	1	FRAME HEAD	6063-T5	-
2	9-88	1	FRAME SILL	6063-T5	-
3	9-86A	2	FRAME JAMB	6063-T5	-
4	9-22	1/ PANEL	PANEL TOP RAIL	6063-T5	-
5	9-54D	1/ PANEL	MOV. PANEL BOTTOM RAIL	6063-T5	-
6	9-67	1/ PANEL	FIX. PANEL BOTTOM RAIL	6063-T5	-
7	9-83	2/ PANEL	JAMB RAIL/LOCK STILE	6063-T5	-
8	9-132	1/ PANEL	INTERLOCK STILE	6063-T5	-
9	9-100A	1	FEMALE ASTRAGAL	6063-T5	-
10	9-140	1	SILL RISER	6063-T5	-
11	-	-	-	-	-
12	9-143	2	ASTRAGAL CLIP ANGLE	6063-T5	AT BOTTOM OF MOV. ASTRAGAL
13	-	-	-	-	-
14	9-6036	1	REINFORCING TUBE	STEEL	AT ASTRAGAL
15	9-141	2	FIXED PANEL CLIP	6063-T5	AT TOP/BOTTOM FXD. INTERLOCK
16	9-11	3/ JAMB	FIXED PANEL RETAINER	6063-T5	AT FIXED LOCK STILE
17	9-139-1	1/ MOV. PANEL	REINFORCING CHANNEL	ALUM	AT BOTTOM RAIL
18	9-6038	1/STILE	REINFORCING BAR (3/8" X 1-1/2")	STEEL	-
19	-	-	-	-	-
20	9-2007B	4/ PANEL	GLAZING CHANNEL	VINYL	-
21	40-1016	2	LOCK ASSEMBLY	ALUM/PLASTIC	-
22	40-1004	4/LOCK	LOCK KEEPER	ALUM	AT ASTRAGAL/JAMB
23	9-6031	2/ MOV. PANEL	WHEEL ASSEMBLY	ZINC/CHROMATE	-
24	9-2019	13	VERTICAL W'STRIPPING	VINYL FLAP	AT JAMBS, ASTRAGAL & INTERLOCK
25	9-2003	1	VERTICAL W'STRIPPING	VINYL BULB	AT ASTRAGAL
26	9-2006	6	HORIZ. W'STRIPPING	VINYL FLAP	AT MOV. PANEL BOTTOM RAIL
27	8-2004	8	HORIZ. W'STRIPPING	WOOLPILE	AT TOP RAILS
28	9-6023	1/ MOV. PANEL	DOOR SWEEP	ALUM/VINYL	-
29	9-5006	4/ PANEL	PANEL SPACER	NYLON	-
30	9-2023	5	PAD (1-1/2" X 1" X 1/2")	POLYURETHANE	TOP CORNER, JAMBS & ASTRAGAL
31	9-2024	4	PAD (1-1/2" X 1-1/4" X 1-1/2")	POLYURETHANE	PANEL HEAD PAD
32	9-2026	4	PAD (11/16 X 3/4" X 1/2")	WOOLPILE	TOP OF INTERLOCKS
33	9-2025	3	PAD (1-1/2" X 1" X 1/8")	POLYURETHANE	DOOR SWEEP PAD
34	9-143	3	ASTRAGAL CLIP PLATE	6063-T5	AT TOP OF ASTRAGAL
35	-	-	-	-	-
36	#8 X 3/8"	1/ CLIP	PAN HEAD TEKS	STEEL	FIX. PANEL RETAINER
37	-	-	-	-	-
38	#8 X 1"	2/ CORNER	PAN HEAD SMS	STEEL	FRAME ASS'Y FASTENERS
39	#8 X 3/4"	1/ CORNER	PAN HEAD TEKS	STEEL	PANEL ASS'Y FASTENERS
40	#10 X 1/2"	8	KEEPER FASTENERS	STEEL	-
41	#10-32 X 7/8"	4	O.H. MACHINE SCREWS	STEEL	LOCK ASS'Y. FASTENERS
42	9-120	OPTIONAL	SCREEN TOP/BOTTOM RAIL	6063-T5	-
43	9-121	OPTIONAL	SCREEN VERTICAL STILE	6063-T5	-

Engr: DR. HUMAYOUN FAROOQ
STRUCTURES
FLA. PE # 16557
C.A.N. 3538

FEB 2 1 2006

PRODUCT REVISED
as complying with the Florida
Building Code
Acceptance No. 05-0726.03
Expiration Date Nov. 16, 2007
By Manuel Perez
Miami-Dade Product Control
Division

AL-FAROOQ CORPORATION
ENGINEERS, PLANNERS & PRODUCT DESIGN
1235 SW 87 AVE
MIAMI, FLORIDA 33174
TEL. (305) 264-8100 FAX. (305) 262-6978
COMP-ANL\W05-23BVI

SERIES PA-9 ALUM SLIDING GLASS DOOR (N.I.)

BELL-VIEW INC.
150 INDUSTRIAL BLVD.
WRIGHTSVILLE, GA. 31096
TEL. (478) 864-2227 FAX. (478) 864-2492

revisions:

no	date	by	description
A	12.07.05		REV. PER BCCO COMMENTS

date: 05-18-05
scale: 1/2" = 1"
dr. by: HAMID
chk. by:

drawing no. W05-23

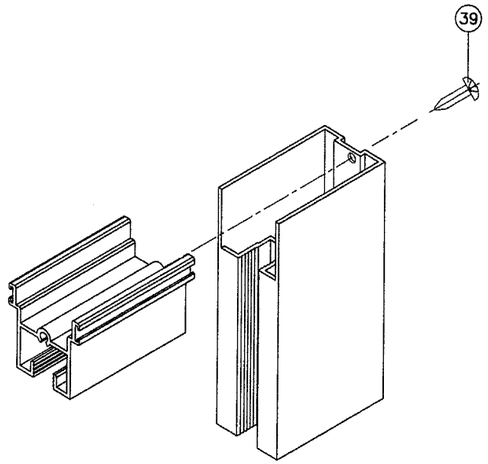

PANEL TOP CORNER

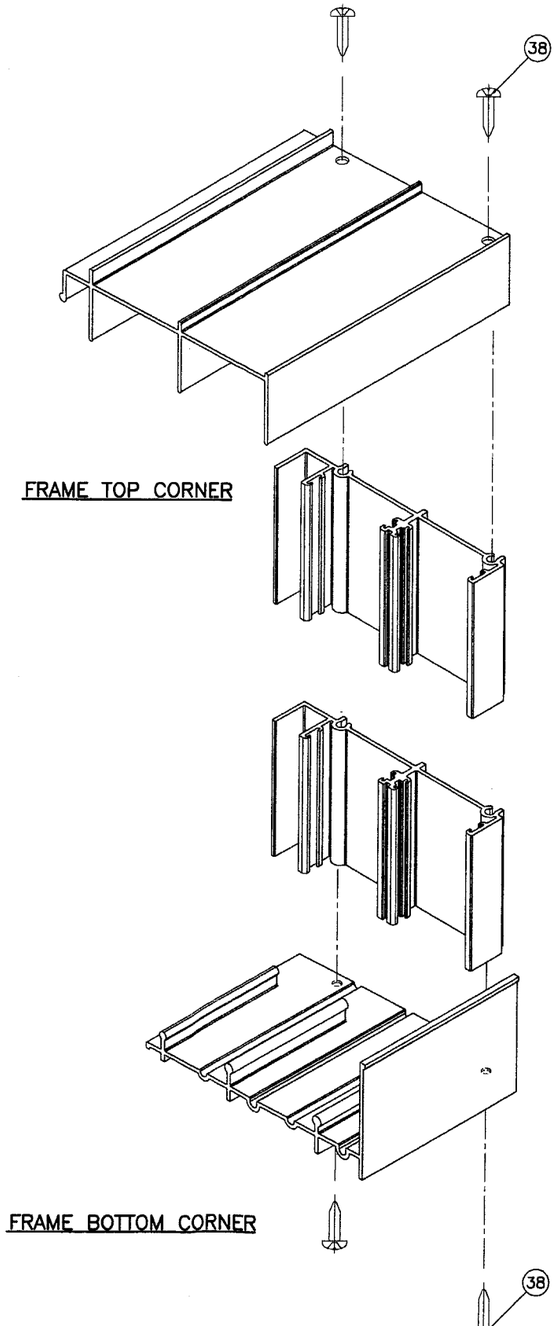

FRAME TOP CORNER

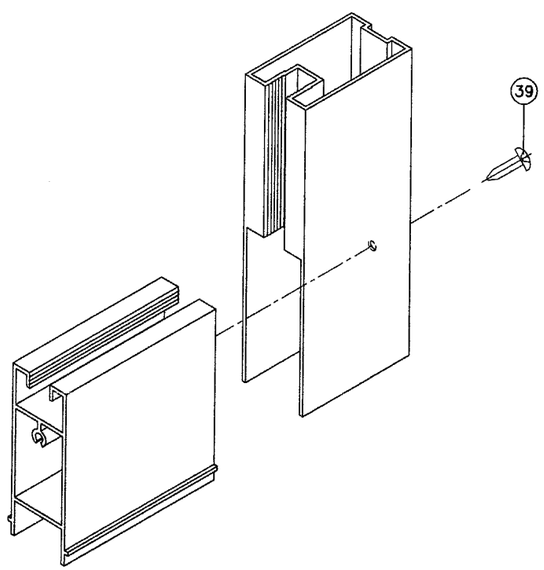

PANEL BOTTOM CORNER

FRAME BOTTOM CORNER

Engr: DR. HUMAYOUN FAROOQ
STRUCTURES
FLA. PE # 16557
C.A.N. 3538

FEB 2 1 2006

PRODUCT REVISED
as complying with the Florida
Building Code
Acceptance No. 05-0726.03
Expiration Date Nov. 16, 2007
By Manuel Perez
Miami-Dade Product Control
Division

SERIES PA-9 ALUM SLIDING GLASS DOOR (N.I.)

BELL-VIEW INC.
150 INDUSTRIAL BLVD.
WRIGHTSVILLE, GA. 31096
TEL. (478) 864-2227 FAX. (478) 864-2492

AL-FAROOQ CORPORATION
ENGINEERS, PLANNERS & PRODUCT DESIGN
1235 SW 87 AVE
MIAMI, FLORIDA 33174
TEL. (305) 264-8100 FAX. (305) 262-6978

COMP-ANL\W05-23BVI

revisions:

no	date	by	description
A	12.07.05		NO CHANGE THIS SHEET

date: 05-18-05
scale: 1/2" = 1"
dr. by: HAMID
chk. by:

drawing no.
W05-23

sheet 6 of 6