MIAMI-DADE

BUILDING CODE COMPLIANCE OFFICE (BCCO)
PRODUCT CONTROL DIVISION

MIAMI-DADE COUNTY, FLORIDA
METRO-DADE FLAGLER BUILDING
140 WEST FLAGLER STREET, SUITE 1603
MIAMI, FLORIDA 33130-1563
(305) 375-2901 FAX (305) 375-2908

NOTICE OF ACCEPTANCE (NOA)

Weather Guard, Inc.
305 Division Ave.
Ormond Beach, FL 32174

SCOPE: This NOA is being issued under the applicable rules and regulations governing the use of construction materials. The documentation submitted has been reviewed by Miami-Dade County Product Control Division and accepted by the Board of Rules and Appeals (BORA) to be used in Miami Dade County and other areas where allowed by the Authority Having Jurisdiction (AHJ).

This NOA shall not be valid after the expiration date stated below. The Miami-Dade County Product Control Division (In Miami Dade County) and/or the AHJ (in areas other than Miami Dade County) reserve the right to have this product or material tested for quality assurance purposes. If this product or material fails to perform in the accepted manner, the manufacturer will incur the expense of such testing and the AHJ may immediately revoke, modify, or suspend the use of such product or material within their jurisdiction. BORA reserves the right to revoke this acceptance, if it is determined by Miami-Dade County Product Control Division that this product or material fails to meet the requirements of the applicable building code.
This product is approved as described herein, and has been designed to comply with the High Velocity Hurricane Zone of the Florida Building Code.

DESCRIPTION: 40mm Extruded Aluminum Roll-Up Shutter

APPROVAL DOCUMENT: Drawing No. 02-512, titled "40mm Slat Roll-Up Shutters", prepared by Tilteco, Inc. dated 11/07/02, with last revision on 11/07/02, sheets 1 through 12 of 12 including 5A, bearing the Miami-Dade County Product Control Renewal stamp with the Notice of Acceptance number and expiration date by the Miami-Dade County Product Control Division.

MISSILE IMPACT RATING: Large and Small Missile Impact

LABELING: Each unit shall bear a permanent label with the manufacturer's name or logo, city, state and the following statement: "Miami-Dade County Product Control Approved or MDCPCA", unless otherwise noted herein.

RENEWAL of this NOA shall be considered after a renewal application has been filed and there has been no change in the applicable building code negatively affecting the performance of this product.

TERMINATION of this NOA will occur after the expiration date or if there has been a revision or change in the materials, use, and/or manufacture of the product or process. Misuse of this NOA as an endorsement of any product, for sales, advertising or any other purposes shall automatically terminate this NOA. Failure to comply with any section of this NOA shall be cause for termination and removal of NOA.

ADVERTISEMENT: The NOA number preceded by the words Miami-Dade County, Florida, and followed by the expiration date may be displayed in advertising literature. If any portion of the NOA is displayed, then it shall be done in its entirety.

INSPECTION: A copy of this entire NOA shall be provided to the user by the manufacturer or its distributors and shall be available for inspection at the job site at the request of the Building Official.
This NOA **renews NOA # 03-0106.17** and consists of this page 1, evidence page as well as approval document mentioned above.
The submitted documentation was reviewed by **Candido F. Font, P.E.**

03/23/06

PRODUCT CONTROL ACCEPTED

NOA No 05-0802.04
Expiration Date: March 29, 2011
Approval Date: March 23, 2006

Weather Guard, Inc.

NOTICE OF ACCEPTANCE: EVIDENCE PAGE

A. DRAWING

1. Drawing No. 02-512, titled "40 mm Slat Roll-Up Shutter ", Sheets 1 through 12 including 5A of 12, prepared by Tilteco, Inc., dated 11/07/02, with last revision on 11/07/02, signed and sealed by W.A. Tillit Jr., PE.

B. TEST

1. Test report on Large Missile Impact Test per PA 201, Cyclic Wind Pressure Test per PA 203 and Uniform Static Air Pressure Test per PA 202, of "Series: 40mm; Aluminum Roll Up Shutter", prepared by Fenestration Testing Laboratory, Inc., Report No. 2749, dated 08/24/2000, signed and sealed by A. P. Gonzalez, PE.
2. Test report on Large Missile Impact Test per PA 201of "Aluminum Storm Bar", prepared by Fenestration Testing Laboratory, Inc., Report No. 2760, dated 08/31/2000, signed and sealed by A. P. Gonzalez, PE.

C. CALCULATIONS

1. Comparative analysis for slats; storm bars, headers and anchors using rational analysis dated 09/14/00, pages 1 through 107 of 107, prepared by Tilteco Inc., signed and sealed by W. A. Tillit Jr., PE.

D. QUALITY ASSURANCE

1. Miami-Dade County Product Control.

E. MATERIAL CERTIFICATION

1. Tensile Test Report No. 13974.0001, per ASTM B 557, prepared by ATC Associates, Inc. dated 09/20/00, signed and sealed by S.E. black, PE.

F. STATEMENTS

1. Letter of Code Compliance issued by Tilteco, Inc., on 04/04/2001, signed and sealed by W.Tillit Jr., PE.
2. No-financial interest letter issued by Tilteco, Inc., on 04/04/2001, signed and sealed by W. A.Tillit Jr., PE.
3. Test compliance letter issued by Fenestration Testing Laboratory, Inc., on 04/30/2001, signed and sealed by A. Acevedo, PE.
4. Test relinquish letter issued by Weather Guard, Inc. on 04/06/2001 and signed by D. D. Thomas. Advise purchase letter issued by ASSA, Inc. on 04/08/2001and signed by W. Feeley.
5. Letter of changes prepared by Tilteco, Inc. dated 02/04/03, signed and sealed by W. A. Tillit Jr. PE.
6. Release Letter issued by ASSA Inc. dated 08/02/01 and signed by T. Kip.
7. Compliance Letter issued by Weather Guard Inc. issued on 08/02/01, signed by D. D. Thomas and notarized by G. Klein.

03/23/06

Candido F. Font, P. E.
Senior Product Control Examiner
NOA No 05-0802.04
Expiration Date: March 29, 2011
Approval Date: March 23, 2003

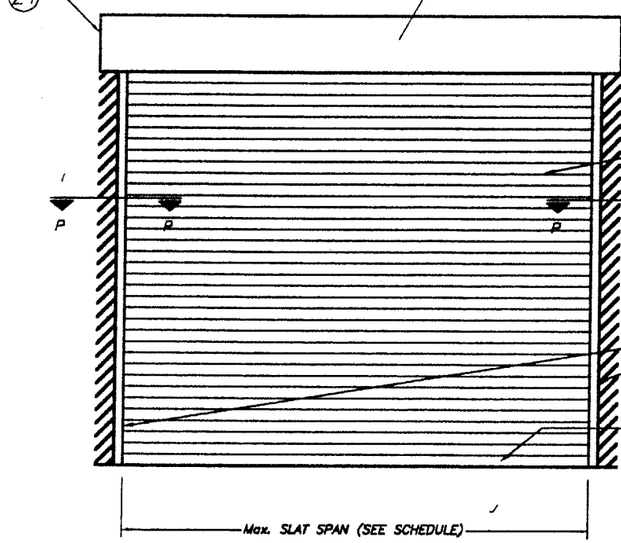

TYPICAL SINGLE UNIT ELEVATION (NO STORM BARS REQUIRED)

NOTE: SEE SHEET 2 & 3 OF 12 FOR COMPONENTS NOMENCLATURE.

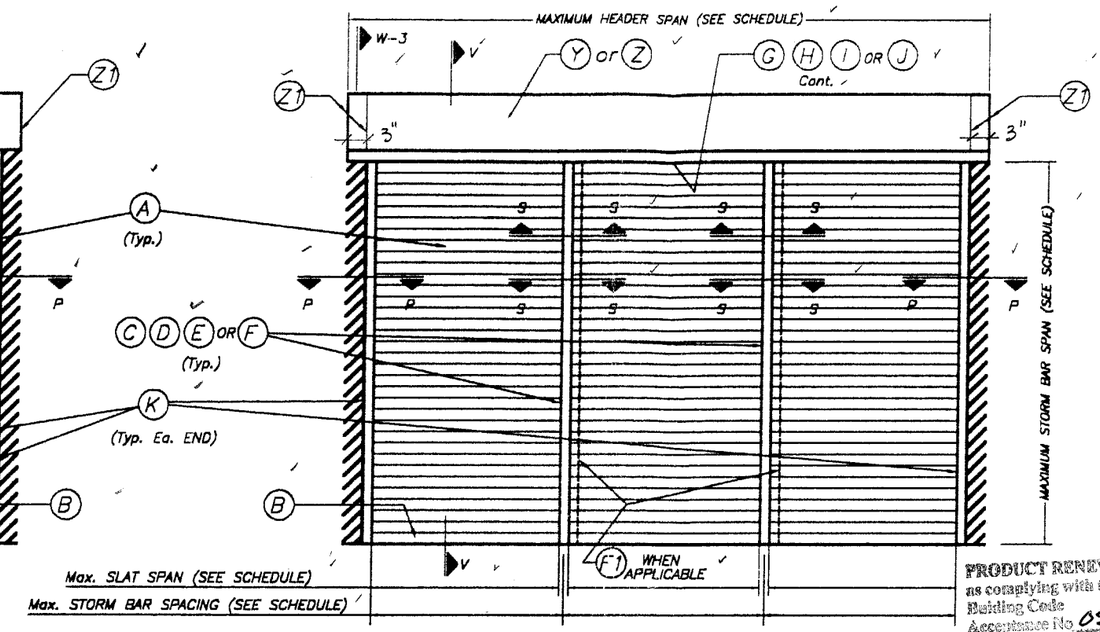

TYPICAL MULTIPLE UNIT ELEVATION (STORM BARS REQUIRED)

NOTE: SEE SHEET 2 & 3 OF 12 FOR COMPONENTS NOMENCLATURE.

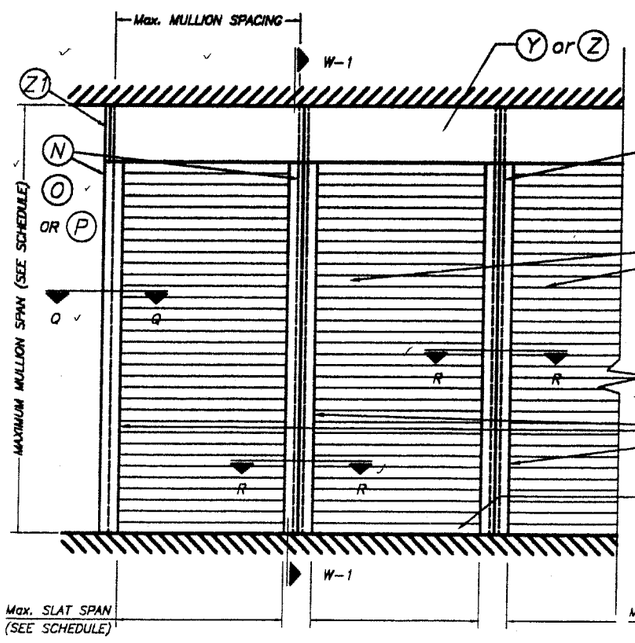

TYPICAL CONSECUTIVE SINGLE UNIT ELEVATION (NO STORM BARS REQUIRED)

NOTE: SEE SHEET 2 & 3 OF 12 FOR COMPONENTS NOMENCLATURE.

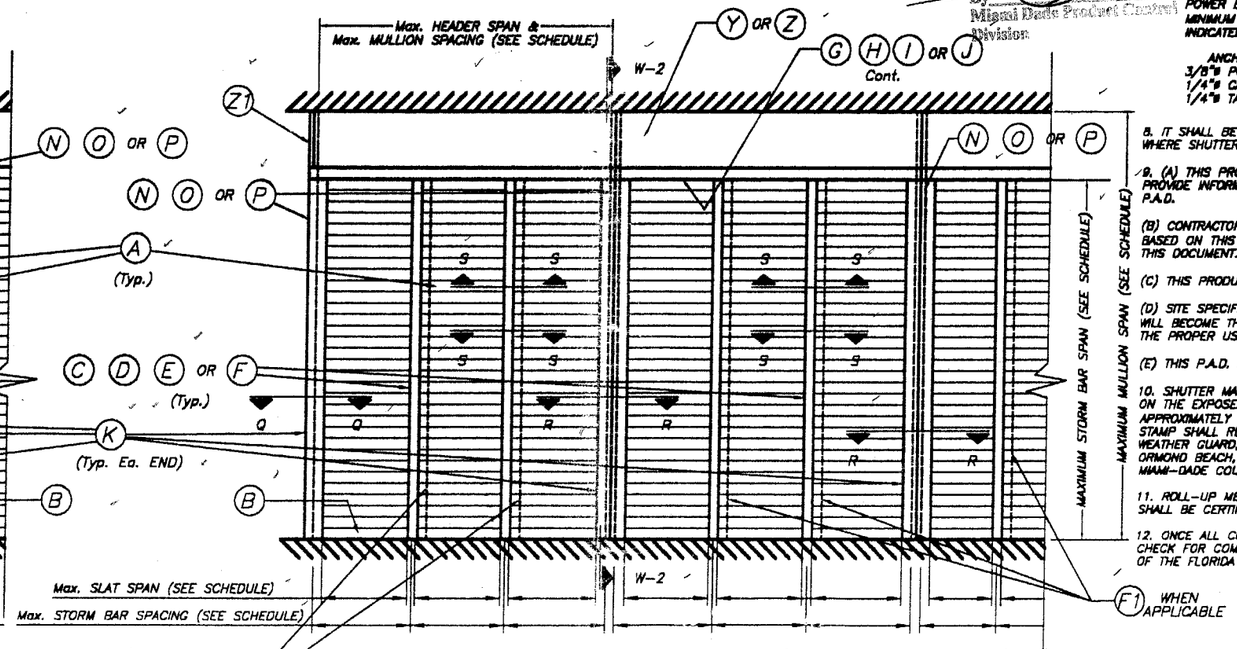

TYPICAL CONSECUTIVE MULTIPLE UNIT ELEVATION (STORM BARS REQUIRED)

NOTE: SEE SHEET 2 & 3 OF 12 FOR COMPONENTS NOMENCLATURE.

F1 WHEN APPLICABLE

NOTE:
SEE SECTIONS ON
SHEET 4 THRU 7.

GENERAL NOTES:

1. ROLL-UP SHUTTERS SHOWN ON THIS PRODUCT APPROVAL DOCUMENT HAS BEEN DESIGNED IN ACCORDANCE WITH THE 2001 EDITION OF THE FLORIDA BUILDING CODE.
DESIGN WIND LOADS SHALL BE DETERMINED AS PER SECTION 1619 OF THE ABOVE MENTIONED CODE, FOR A BASIC WIND SPEED OF 146 m.p.h., AND IN ACCORDANCE W/ ASCE 7-98 STANDARD.
ROLL-UP SHUTTER'S ADEQUACY FOR IMPACT AND FATIGUE RESISTANCE HAS BEEN VERIFIED IN ACCORDANCE WITH SECTION 1606.1.4 OF THE ABOVE MENTIONED CODE AS PER FENESTRATION TESTING LAB. REPORTS # 2749 & 2760 AS PER PA-201, PA-202 & PA-203 STANDARD.

2. ALL ALUMINUM EXTRUSIONS SHALL BE 6063-T6 ALLOY (UNLESS OTHERWISE NOTED).

3. ALL SCREWS TO BE STAINLESS STEEL 304 OR 316 SERIES W/50 ksi YIELD POINT AND 90 ksi TENSILE STRENGTH OR CORROSION RESISTANT COATED CARBON STEEL AS PER DIN 50018.

4. BOLTS TO BE 2024-T4 ALUMINUM ALLOY, GALVANIZED OR STAINLESS STEEL WITH 36 ksi MINIMUM YIELD POINT.

5. STORM BARS AT FLOOR OR CEILING MOUNTING INSTALLATIONS MAY BE REMOVABLE AT NON HURRICANE CONDITIONS. HOWEVER, EACH STORM BAR SHALL BEAR A PERMANENT LABEL IN A VISIBLE PLACE WITH A WARNING NOTE INSTRUCTING THE TENANT OR OWNER THAT STORM BARS MUST BE INSTALLED WITH CORRESPONDING HARDWARE DURING PERIODS OF HURRICANE WARNING AND THAT ROLL UP SHUTTERS WILL NOT OFFER HURRICANE PROTECTION UNLESS ALL STORM BARS ARE INSTALLED AS DIRECTED.

6. REMOVABLE STORM BARS SHALL BE STORED IN A CONSPICUOUS PLACE WITH EASY AND IMMEDIATE ACCESS SO THAT THEY CAN BE REACHED AND INSTALLED ANY TIME (HURRICANE CONDITIONS OR NOT) SLATS ARE ROLLED DOWN. THE EFFECT OF THE SLATS ROLLED DOWN WITHOUT STORM BARS IS; THOSE SLATS WILL SLIP OUT OF TRACK DUE TO THE DEFLECTION CAUSED BY WIND FORCES.

7. ANCHORS TO WALL FOR SIDE RAILS & BOX CONNECTION SHALL BE AS FOLLOWS: (UNLESS OTHERWISE NOTED)
(A) TO EXISTING POURED CONCRETE: (min 2,000 psi)
-1/4" ø TAPCON ANCHORS AS MANUFACTURED BY I.T.W./BUILDEX OR ELCO TEXTRON.
NOTES:
A.1) MINIMUM EMBEDMENT OF TAPCON ANCHORS INTO POURED CONCRETE SHALL BE 1 3/4". NO EMBEDMENT INTO STUCCO SHALL BE CONSIDERED AS PART OF THE REQUIRED EMBEDMENT.
A.2) IN CASE THAT PRECAST STONE, PRECAST CONCRETE PANELS, OR PAVERS BE FOUND ON THE EXISTING WALL OR FLOOR, ANCHORS SHALL BE LONG ENOUGH TO REACH THE MAIN STRUCTURE BEHIND SUCH PANELS.
(B) TO EXISTING CONCRETE BLOCK WALL:
-1/4" ø TAPCON ANCHORS, AS MANUFACTURED BY I.T.W./BUILDEX OR ELCO TEXTRON.
NOTES:
B.1) MINIMUM EMBEDMENT OF TAPCON ANCHORS, INTO THE CONCRETE BLOCK UNIT SHALL BE 1 1/4".
B.2) IN CASE THAT PRECAST STONE, PRECAST CONCRETE PANELS, OR PAVERS BE FOUND ON THE EXISTING WALL OR FLOOR, ANCHORS SHALL BE LONG ENOUGH TO REACH THE MAIN STRUCTURE BEHIND SUCH PANELS.
(C) ANCHORS SHALL BE INSTALLED FOLLOWING ALL OF THE RECOMMENDATIONS AND SPECIFICATIONS OF THE ANCHOR'S MANUFACTURER.
(D) ANCHORS REQUIRED FOR STORM BARS, HEADERS & MULLION CONNECTIONS SHALL BE AS SPECIFIED ON APPLICABLE SECTIONS SHOWN ON SHEET 5, 5A, 6, & 7 OF 12 RESPECTIVELY.
POWER BOLTS & CALK-IN ANCHORS TO BE AS MANUFACTURED BY POWERS FASTENING, INC.
MINIMUM EDGE DISTANCE AND SPACING FOR ABOVE MENTIONED ANCHORS SHALL BE AS INDICATED BELOW OR AT ABOVE MENTIONED SHEET, WHICHEVER IS LARGER (MORE CRITICAL).

ANCHOR	SPACING	EDGE DISTANCE
3/8"ø POWER BOLT	3 3/4"	4 1/2"
1/4"ø CALK-IN	2 1/2"	3"
1/4"ø TAPCON	3"	2 1/2"

8. IT SHALL BE THE RESPONSIBILITY OF THE CONTRACTOR TO VERIFY THE SOUNDNESS OF THE STRUCTURE WHERE SHUTTER IS TO BE ATTACHED TO INSURE PROPER ANCHORAGE.

9. (A) THIS PRODUCT APPROVAL DOCUMENT (P.A.D.) PREPARED BY THIS ENGINEER IS GENERIC AND DOES NOT PROVIDE INFORMATION FOR A SITE SPECIFIC PROJECT; i.e. WHERE THE SITE CONDITIONS DEVIATE FROM THE P.A.D.
(B) CONTRACTOR TO BE RESPONSIBLE FOR THE SELECTION, PURCHASE AND INSTALLATION OF THIS PRODUCT BASED ON THIS PRODUCT APPROVAL PROVIDED HE/SHE DOES NOT DEVIATE FROM THE CONDITIONS DETAILED ON THIS DOCUMENT.
(C) THIS PRODUCT APPROVAL DOCUMENT WILL BE CONSIDERED INVALID IF MODIFIED.
(D) SITE SPECIFIC PROJECTS SHALL BE PREPARED BY A FLORIDA REGISTERED ENGINEER OR ARCHITECT WHICH WILL BECOME THE PROFESSIONAL OF RECORD (P.O.R) FOR THE PROJECT AND WHO WILL BE RESPONSIBLE FOR THE PROPER USE OF THE P.A.D.
(E) THIS P.A.D. SHALL COMPLY WITH SECTION 2: 61G15 OF THE FLORIDA ADMINISTRATIVE CODE.

10. SHUTTER MANUFACTURER'S STAMP SHALL BE PLACED ON THE EXPOSED SURFACE OF THE SIDE RAIL APPROXIMATELY 4" ABOVE THE BOTTOM OF SUCH RAIL. STAMP SHALL READ AS FOLLOWS:
WEATHER GUARD, INC.
ORMOND BEACH, FL.
MIAMI-DADE COUNTY PRODUCT CONTROL APPROVED.

11. ROLL-UP MECHANISM NOT PART OF THIS APPROVAL, BUT SHALL BE CERTIFIED BY AN INDEPENDENT TESTING AGENCY.

12. ONCE ALL COMPONENTS HAVE BEEN CHOSEN, CHECK FOR COMPLIANCE WITH SECTION 1612.1.9 OF THE FLORIDA BUILDING CODE 2001.

PRODUCT RENEWED
as complying with the Florida
Building Code
Acceptance No 05-0602.04
Expiration Date 03/29/11
By
Miami Dade Product Control
Division

PRODUCT REVISED
as complying with the Florida
Building Code
Acceptance No 03-0106.17
Expiration Date 03/29/06
By
Miami Dade Product Control
Division

F.B.C. (H.V.H.Z.) / MIAMI-DADE COUNTY

TILTECO INC.
TILLIT TESTING & ENGINEERING COMPANY
6595 N.W. 36th. St., Ste. 217 - VIRGINIA GARDENS, FL. 33166
Phone : (305)871-1530 . Fax : (305)871-1531
EB-0006719
WALTER A. TILLIT Jr., P. E.
FLORIDA Lic. # 44167

11/1/02

40mm SLAT ROLL-UP SHUTTER

AS SHOWN
SCALE

WEATHER GUARD, INC.
305 DIVISION AVENUE
ORMOND BEACH, FL. 32174

11/7/02
DATE

02-512
DRAWING No

REV. No	DESCRIPTION	DATE	REV. No	DESCRIPTION	DATE
1	OLD 00-304	11/7/02	3		
2	-	-	4		

SHEET 1 OF 12

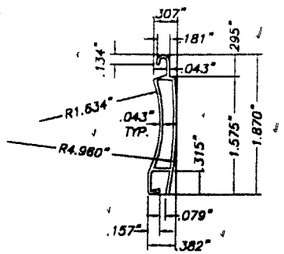

(A) TYPE 1 SLAT:
EXTRUDED ALUMINUM SLAT
6063-T6 ALUMINUM ALLOY
SCALE: 1/2" = 1"

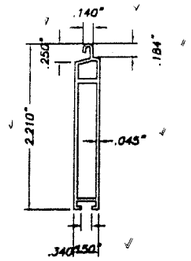

(B) TYPE 2 SLAT:
EXTRUDED ALUMINUM BOTTOM SLAT
6063-T6 ALUMINUM ALLOY
SCALE: 1/2" = 1"

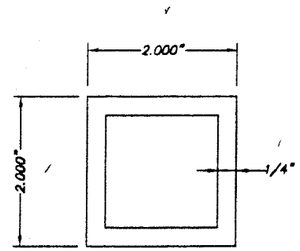

(C) TYPE 1 STORM BAR:
2" EXTRUDED STORM BAR
6063-T6 ALUMINUM ALLOY
SCALE: 1/2" = 1"

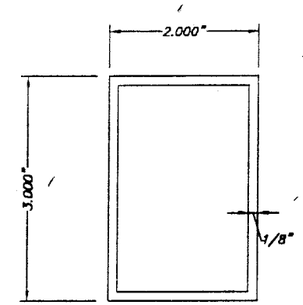

(D) TYPE 2 STORM BAR:
3" EXTRUDED STORM BAR
6063-T6 ALUMINUM ALLOY
SCALE: 1/2" = 1"

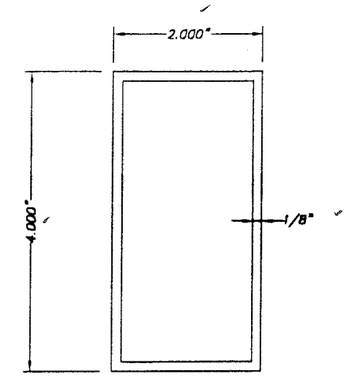

(E) TYPE 3 STORM BAR:
4" EXTRUDED STORM BAR
6063-T6 ALUMINUM ALLOY
SCALE: 1/2" = 1"

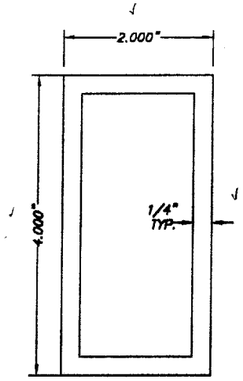

(F) TYPE 4 STORM BAR:
4" HEAVY EXTRUDED STORM BAR
6063-T6 ALUMINUM ALLOY
SCALE: 1/2" = 1"

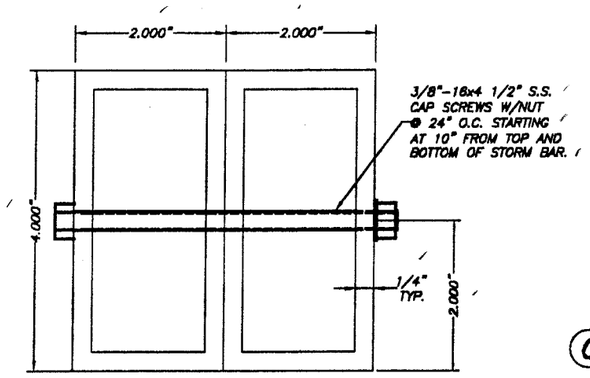

(F1) TYPE 5 STORM BAR:
4" HEAVY EXTRUDED STORM BAR
6063-T6 ALUMINUM ALLOY
SCALE: 1/2" = 1"

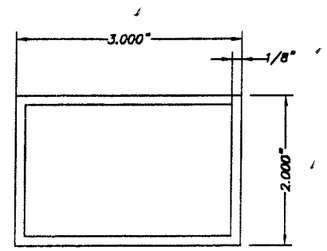

(G) HEADER TYPE 1:
6063-T6 ALUMINUM ALLOY
SCALE: 1/2" = 1"

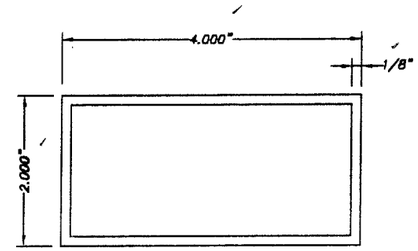

(H) HEADER TYPE 2:
6063-T6 ALUMINUM ALLOY
SCALE: 1/2" = 1"

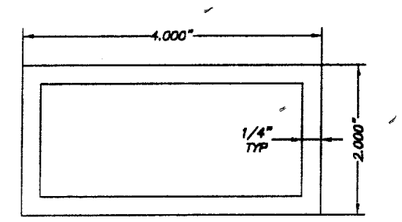

(I) HEADER TYPE 3:
6063-T6 ALUMINUM ALLOY
SCALE: 1/2" = 1"

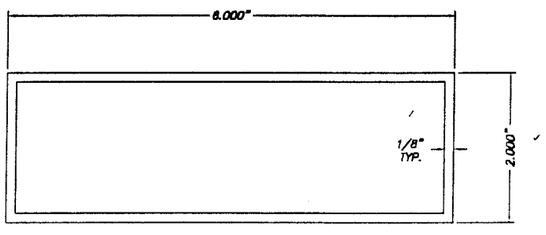

(J) HEADER TYPE 4:
6063-T6 ALUMINUM ALLOY
SCALE: 1/2" = 1"

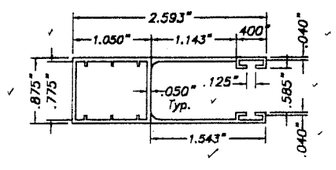

(K) TYPE 1 SIDE RAIL:
6063-T6 Alum. ALLOY
SCALE: 1/2" = 1"

PRODUCT RENEWED
as complying with the Florida Building Code
Acceptance No. 05-0802.04
Expiration Date 03/29/11
By
Miami Dade Product Control Division

PRODUCT REVISED
as complying with the Florida Building Code
Acceptance No. 03-0106.17
Expiration Date 03/29/06
By
Miami Dade Product Control Division

F.B.C. (H.V.H.Z.) / MIAMI-DADE COUNTY

12/19/02

TILTECO INC.
TILLIT TESTING & ENGINEERING COMPANY
6595 N.W. 36th. St., Ste. 217 - VIRGINIA GARDENS, FL. 33166
Phone : (305)871-1530 . Fax : (305)871-1531
EB-0006719
WALTER A. TILLIT Jr., P. E.
FLORIDA Lic. # 44167

40mm SLAT ROLL-UP SHUTTER

AS SHOWN SCALE

WEATHER GUARD, INC.
305 DIVISION AVENUE
ORMOND BEACH, FL. 32174

11/7/02 DATE

02-512 DRAWING No

REV. No	DESCRIPTION	DATE	REV. No	DESCRIPTION	DATE
1	OLD 00-304	11/7/02	3		
2	-	-	4		

SHEET 2 OF 12

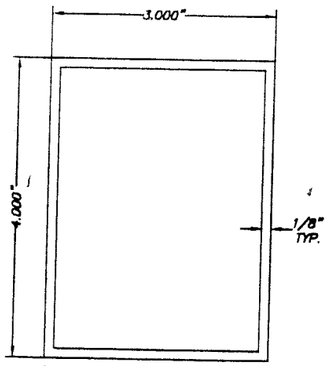

(N) TYPE 1 MULLION:
4" EXTRUDED MULLION
6063-T6 ALUMINUM ALLOY
SCALE: 1/2" = 1"

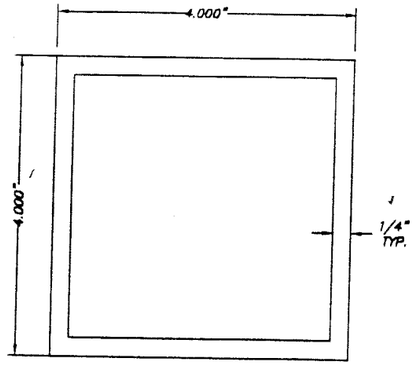

(O) TYPE 2 MULLION:
4" EXTRUDED MULLION
6063-T6 ALUMINUM ALLOY
SCALE: 1/2" = 1"

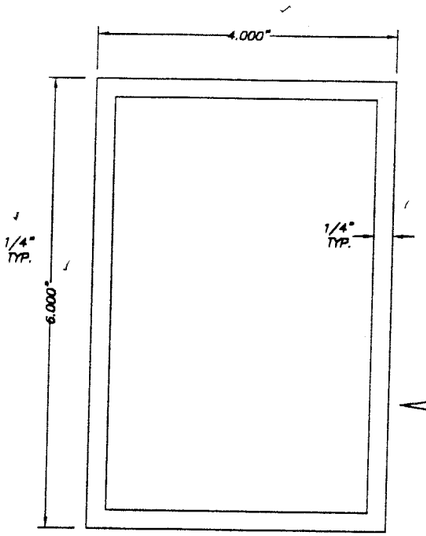

(P) TYPE 3 MULLION:
6" EXTRUDED MULLION
6063-T6 ALUMINUM ALLOY
SCALE: 1/2" = 1"

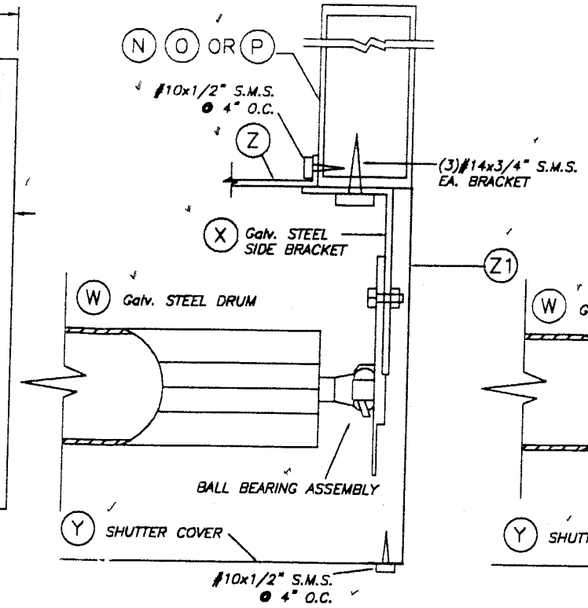

BRACKET DETAIL 1A

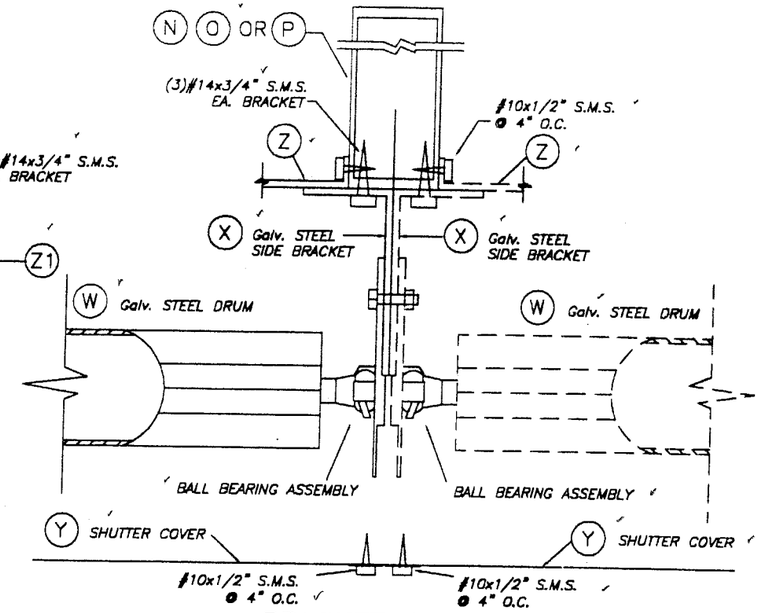

BRACKET DETAIL 2

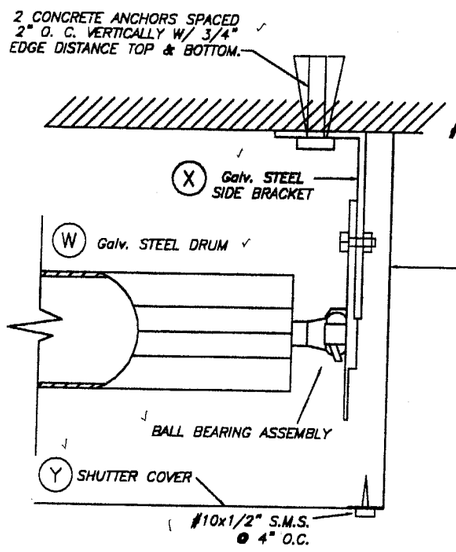

BRACKET DETAIL 1

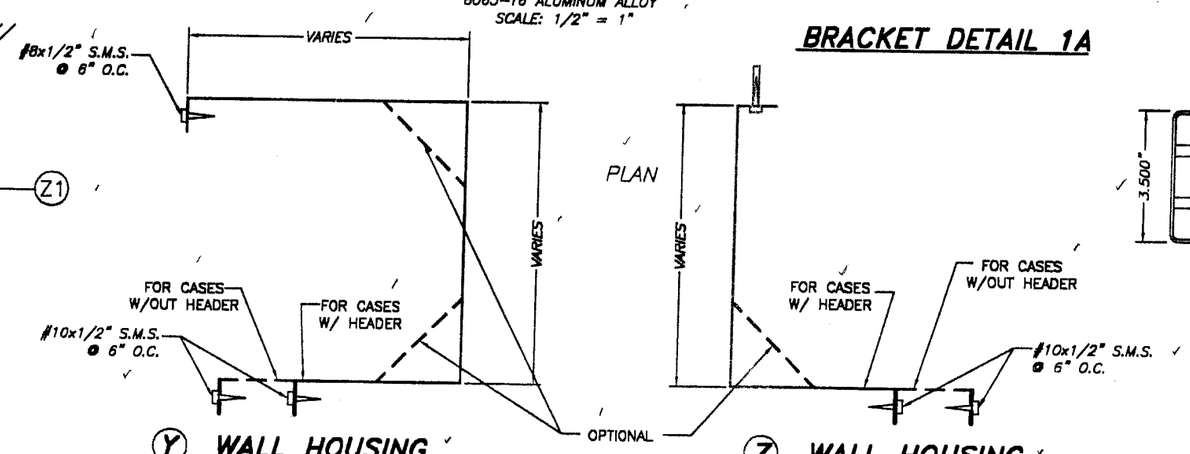

(Y) WALL HOUSING
SCALE: 3/16" = 1"
3105-H14 ALUMINUM ALLOY
THICKNESS: .032"

(Z) WALL HOUSING
SCALE: 3/16" = 1"
3105-H14 ALUMINUM ALLOY
THICKNESS: .032"

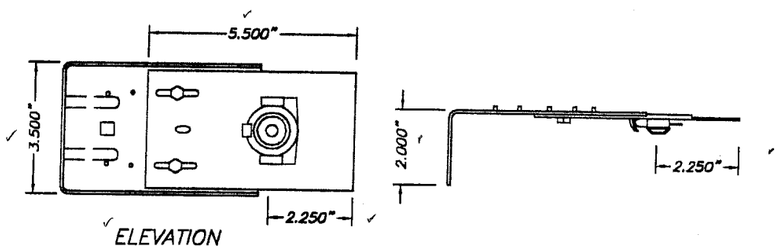

(X) SIDE BRACKET SCALE: 1/4" = 1"
1010 ELITE ROLLED STEEL F. E.
P. O. 1 Z 200 DESIGNATION
Ftu= 410 NW/MM2. % OF STRETCH
MINIMAL ON TEST. BAR OF 80 MM: 24 %
G-90 GALVANIZED COATING Thk.: .060"

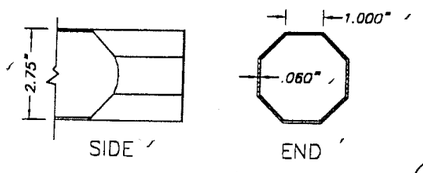

(W) DRUM SCALE: 1/4" = 1"
1010 ELITE ROLLED STEEL F. E.
P. O. 1 Z 200 DESIGNATION
Ftu= 410 NW/MM2. % OF STRETCH
MINIMAL ON TEST. BAR OF 80 MM: 24 %
G-90 GALVANIZED COATING Thk.: .060"

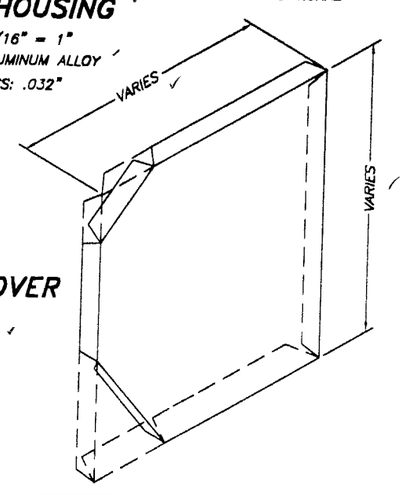

(Z1) SHUTTER SIDE COVER
SCALE: 3/16" = 1"
3105-H14 ALUMINUM ALLOY
THICKNESS: .032"

PRODUCT RENEWED
as complying with the Florida Building Code
Acceptance No. 05-0802.04
Expiration Date: 03/29/11
By: Miami Dade Product Control Division

PRODUCT REVISED
as complying with the Florida Building Code
Acceptance No. 03-0106.17
Expiration Date: 03/29/06
By: Miami Dade Product Control Division

F.B.C. (H.V.H.Z.) / MIAMI-DADE COUNTY

11/19/02

TILTECO INC.
TILLIT TESTING & ENGINEERING COMPANY
6595 N.W. 36th. St., Ste. 217 - VIRGINIA GARDENS, FL. 33166
Phone : (305)871-1530 Fax : (305)871-1531
EB-0006719
WALTER A. TILLIT Jr., P. E.
FLORIDA Lic. # 44167

40mm SLAT ROLL-UP SHUTTER

WEATHER GUARD, INC.
305 DIVISION AVENUE
ORMOND BEACH, FL. 32174

REV. No	DESCRIPTION	DATE	REV. No	DESCRIPTION	DATE
1	OLD 00-304	11/7/02	3		
2	-	-	4		

AS SHOWN
SCALE
11/7/02
DATE
02-512
DRAWING No
SHEET 3 OF 12

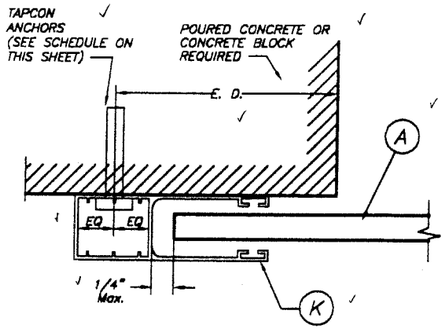

SECTION P – P (1) : WALL MOUNT

SCALE: 1/2" = 1"

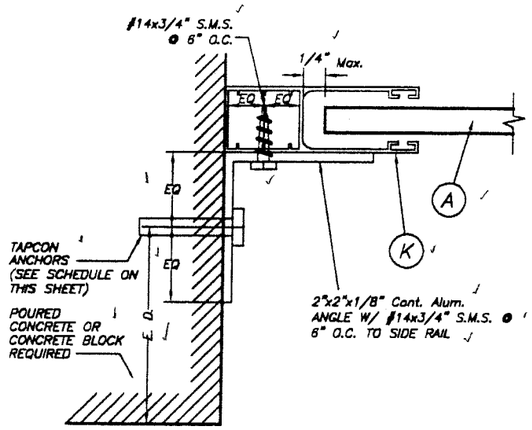

SECTION P – P (2) : INSIDE MOUNT

SCALE: 1/2" = 1"

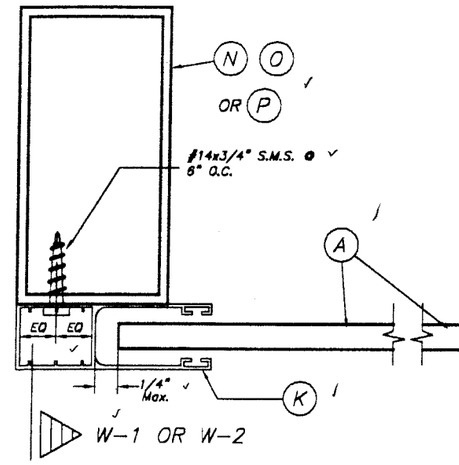

SECTION Q – Q : MULLION MOUNT (FACE MOUNT)

SCALE: 1/2" = 1"

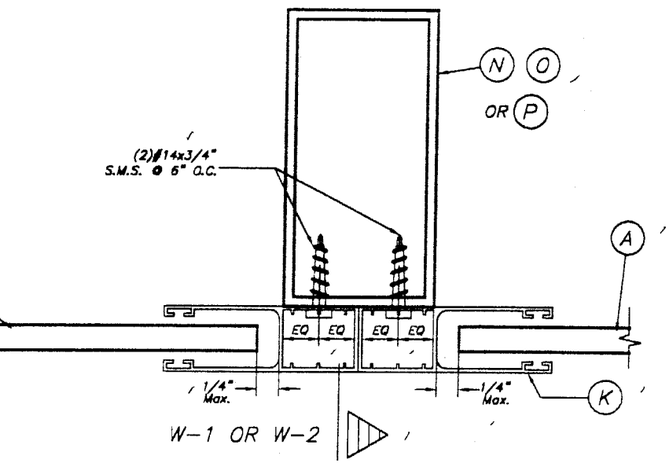

SECTION R – R : MULLION MOUNT (FACE MOUNT)

SCALE: 1/2" = 1"

SIDE RAIL ANCHOR SCHEDULE

MAXIMUM DESIGN PRESSURE RATING "W" (p. s. f.) AND CORRESPONDING MAXIMUM ANCHOR SPACING(in)* FOR SIDE RAILS (K) CONNECTION TO C. B. S.

(USE NEGATIVE PRESSURE VALUES AS PER ASCE 7-98)

MAXIMUM DESIGN LOAD "W" (p.s.f.)	SIDE RAIL (K)		
	WALL MOUNT	INSIDE MOUNT	BUILD-OUT MOUNT
80.0 OR LESS	6"	6"	6"
	6"	6"	6"
>80.0 TO 100.0	5"	5"	6"
	6"	6"	6"

MASONRY
POURED CONCRETE

SUBSTRATE LEGEND

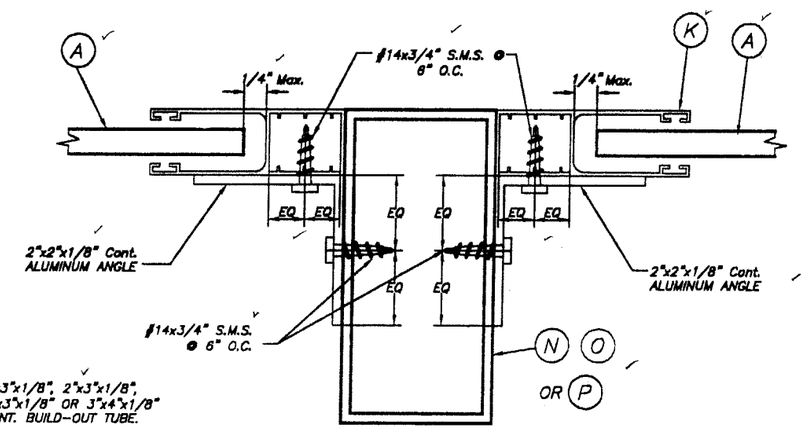

SECTION R – R : MULLION MOUNT (INSIDE MOUNT)

SCALE: 1/2" = 1"

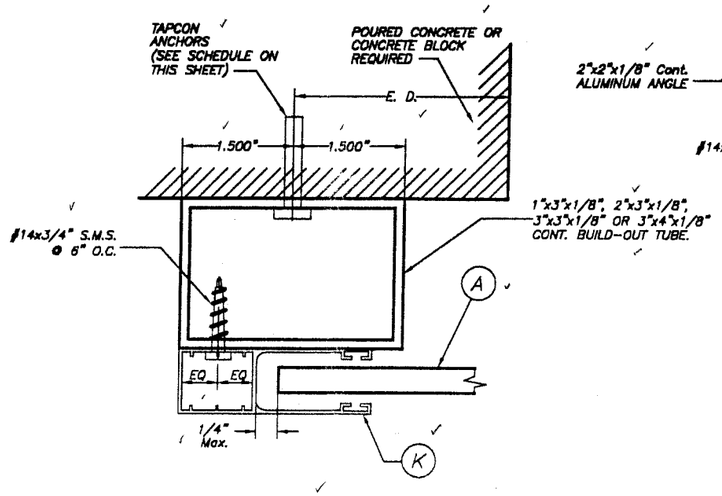

SECTION P – P (3) : BUILD-OUT MOUNT

SCALE: 1/2" = 1"

* MAXIMUM ANCHOR SPACING (in.) AT SIDE RAILS VERSUS EDGE DISTANCE = E. D.

MAXIMUM SIDE RAIL ANCHOR SPACING ARE VALID FOR 3 1/2" EDGE DISTANCE. FOR E. D. LESS THAN 3 1/2", REDUCE ANCHOR SPACING BY MULTIPLYING SPACING SHOWN ON SCHEDULE BY THE FOLLOWING FACTORS (REDUCED SPACING OBTAINED USING FACTORS SHALL NOT BE LESS THAN 3"):

ACTUAL E. D.	FACTOR
3"	.86
2 1/2"	.75
2"	.50

PRODUCT RENEWED
as complying with the Florida Building Code
Acceptance No. 05-0802.04
Expiration Date 03/29/11
By: Miami Dade Product Control Division

PRODUCT REVISED
as complying with the Florida Building Code
Acceptance No. 03-0106.17
Expiration Date 03/29/06
By: Miami Dade Product Control Division

F.B.C. (H.V.H.Z.) / MIAMI-DADE COUNTY

11/18/02

TILTECO INC.
TILLIT TESTING & ENGINEERING COMPANY
6595 N.W. 36th. St., Ste. 217 – VIRGINIA GARDENS, FL 33166
Phone : (305)871-1530 . Fax : (305)871-1531
EB-0006719
WALTER A. TILLIT Jr., P. E.
FLORIDA Lic. # 44167

40mm SLAT ROLL-UP SHUTTER

WEATHER GUARD, INC.
305 DIVISION AVENUE
ORMOND BEACH, FL 32174

REV. No	DESCRIPTION	DATE	REV. No	DESCRIPTION	DATE
1	OLD 00-304	11/7/02	3		
2	–	–	4		

AS SHOWN
SCALE

11/7/02
DATE

02-512
DRAWING No

SHEET 4 OF 12

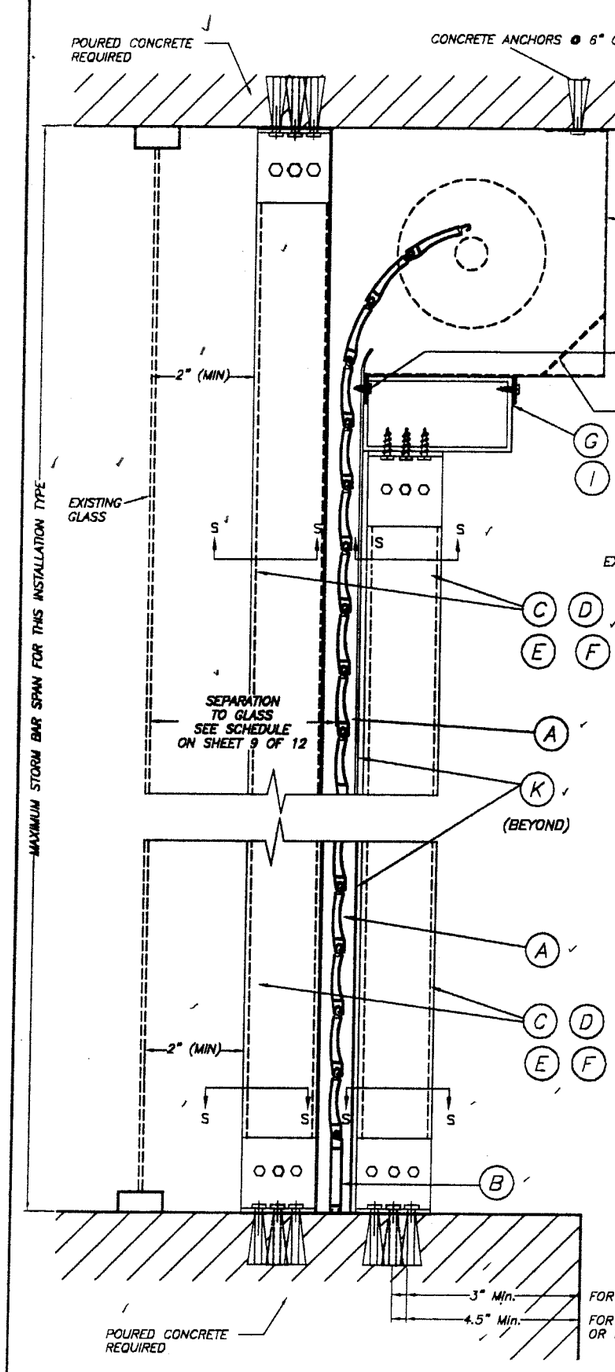

CEILING & FLOOR MOUNTING INSTALLATION W/ FIXED OR REMOVABLE STORM BARS W/CONCRETE ANCHORS

(SEE SECTION "S" FOR ANCHOR TYPE REQUIREMENT)

SCALE : N.T.S.

SINGLE SPAN SECTIONS AND DETAILS ARE SIMILAR TO ABOVE SHOWN WITHOUT STORM BAR & HEADERS.

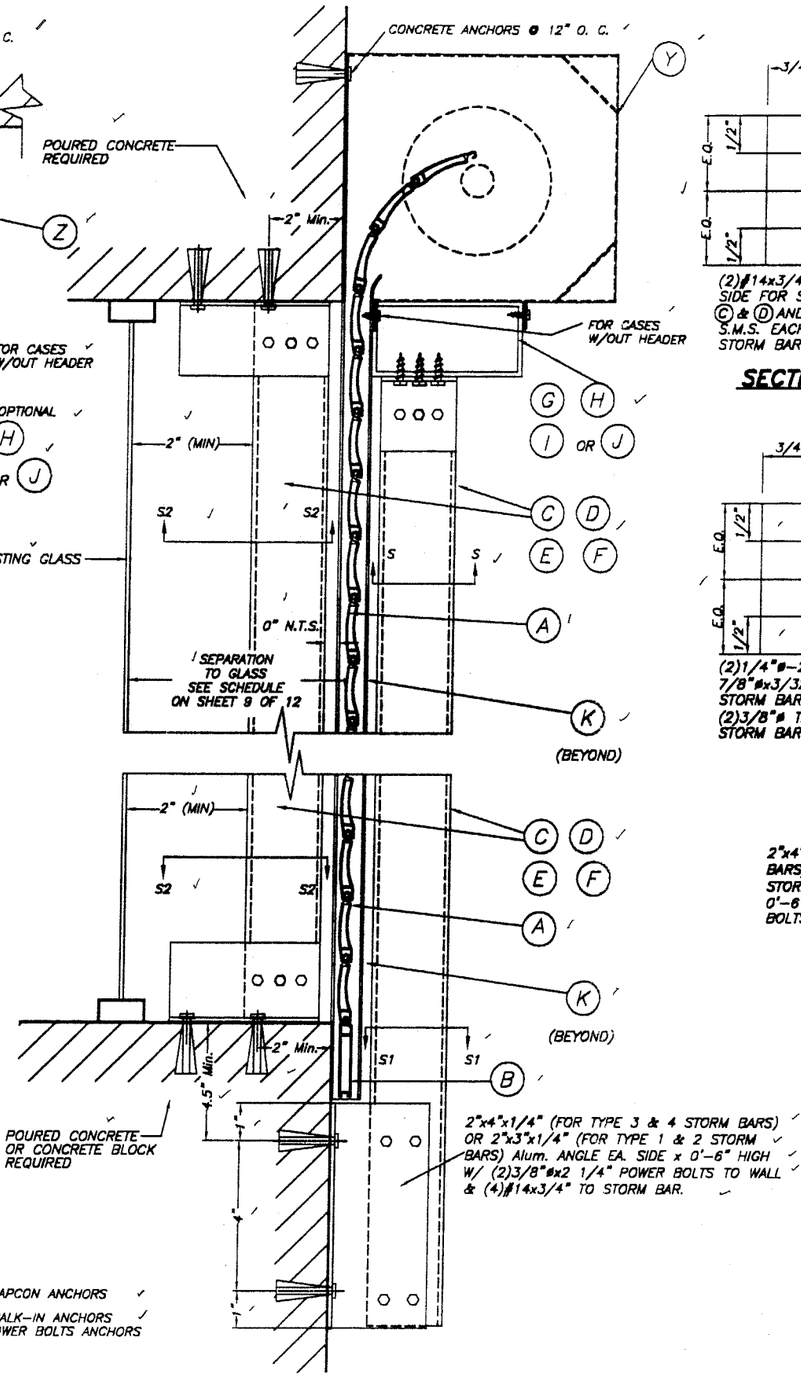

WALL MOUNTING INSTALLATION W/FIXED STORM BARS W/CONCRETE ANCHORS

SCALE : N.T.S.

SECTION V – V

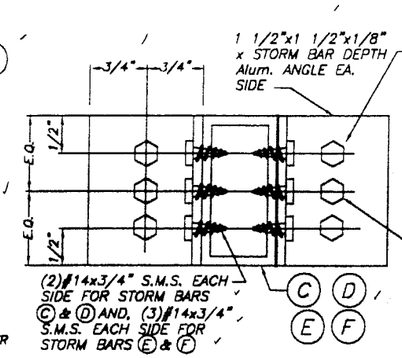

SECTION S – S (FOR FIXED STORM BAR)

SCALE : 1/2" = 1"

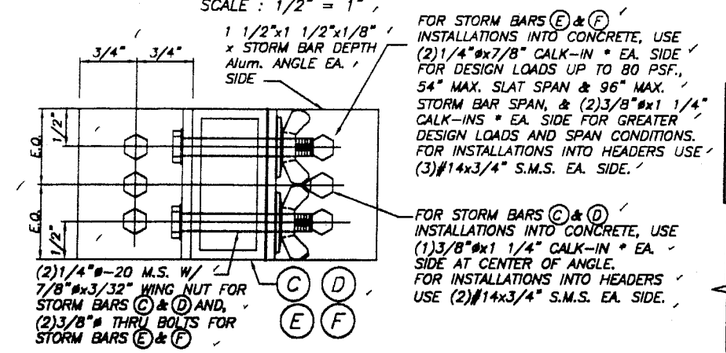

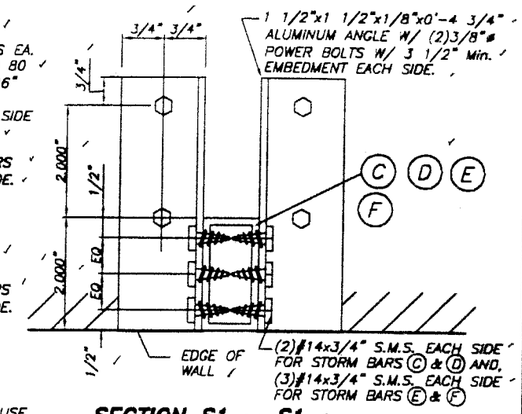

SECTION S1 – S1

SCALE : 1/4" = 1"

* 1/4"ø-20 OR 3/8"ø-16 MACHINE SCREWS USED JOINTLY W/ 1/4"øx7/8" OR 3/8"øx1 1/4" CALK-IN ANCHORS RESPECTIVELY SHALL BE LEFT TOGETHER W/ ANCHORS AT THE TIME STORM BARS ARE REMOVED. (SEE DET. A).

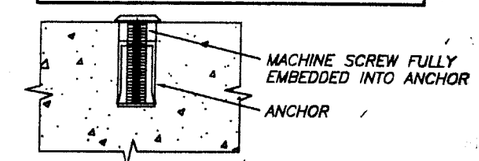

DETAIL A

SCALE : 1/2" = 1"

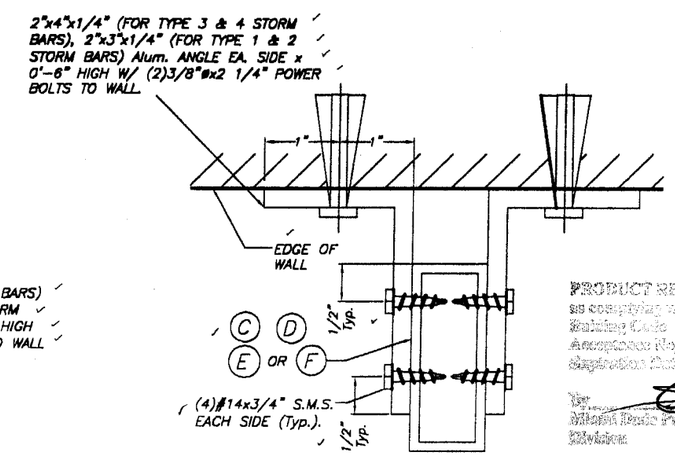

SECTION S1 - S1

SCALE : 1/2" = 1"

PRODUCT REVIEWED
as complying with the Florida Building Code
Acceptance No 05-0802.04
Expiration Date 03/29/11
By
Miami Dade Product Control Division

PRODUCT REVIEWED
as complying with the Florida Building Code
Acceptance No 03-0106.17
Expiration Date 03/29/06
By
Miami Dade Product Control Division

F.B.C. (H.V.H.Z.) / MIAMI-DADE COUNTY

TILTECO INC.
TILLIT TESTING & ENGINEERING COMPANY
6595 N.W. 36th. St., Ste. 217 - VIRGINA GARDENS, FL. 33166
Phone : (305)871-1530 . Fax : (305)871-1531
EB-0006719
WALTER A. TILLIT Jr., P. E.
FLORIDA Lic. # 44167

12/11/02

40mm SLAT ROLL-UP SHUTTER

AS SHOWN SCALE

WEATHER GUARD, INC.
305 DIVISION AVENUE
ORMOND BEACH, FL. 32174

11/7/02 DATE

02-512 DRAWING No

REV. No	DESCRIPTION	DATE	REV. No	DESCRIPTION	DATE
1	OLD 00-304	11/7/02	3		
2	–	–	4		

SHEET 5 OF 12

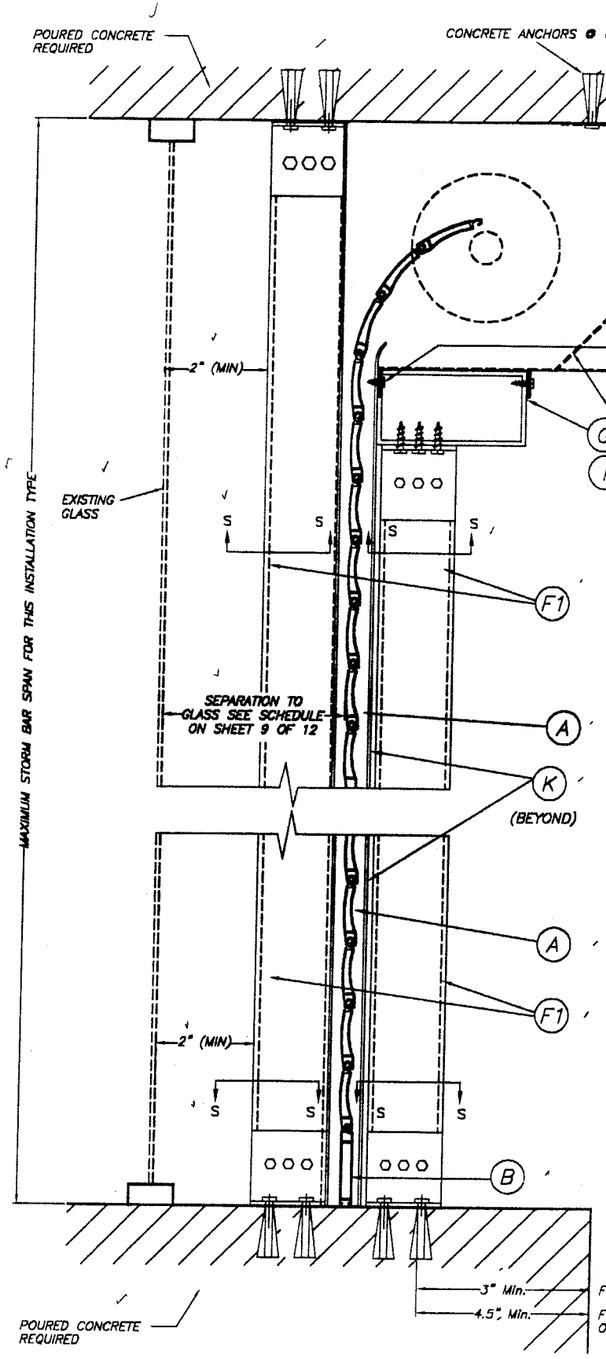

CEILING & FLOOR MOUNTING INSTALLATION W/ FIXED OR REMOVABLE STORM BARS W/CONCRETE ANCHORS

(SEE SECTION "S" FOR ANCHOR TYPE REQUIREMENT)

SCALE : N.T.S.

SINGLE SPAN SECTIONS AND DETAILS ARE SIMILAR TO ABOVE SHOWN WITHOUT STORM BAR & HEADERS.

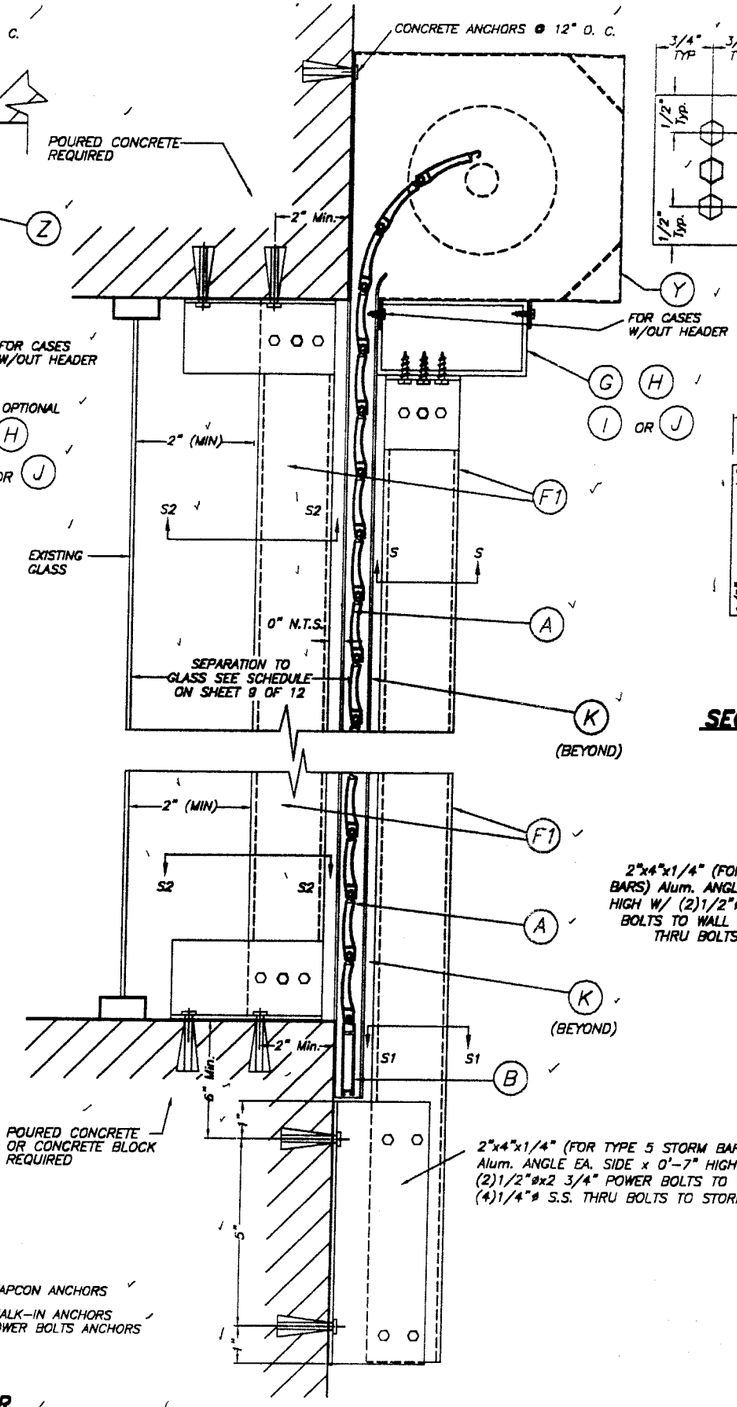

WALL MOUNTING INSTALLATION W/FIXED STORM BARS W/CONCRETE ANCHORS

SCALE : N.T.S.

SECTION V – V

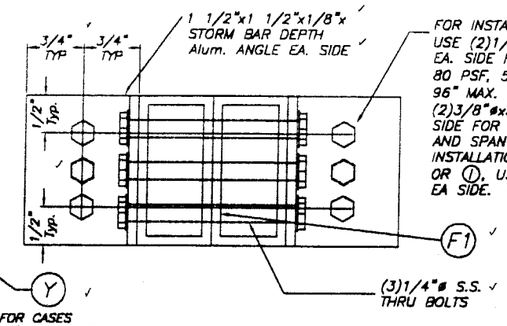

SECTION S – S (FOR FIXED STORM BAR)

SCALE : 1/2" = 1"

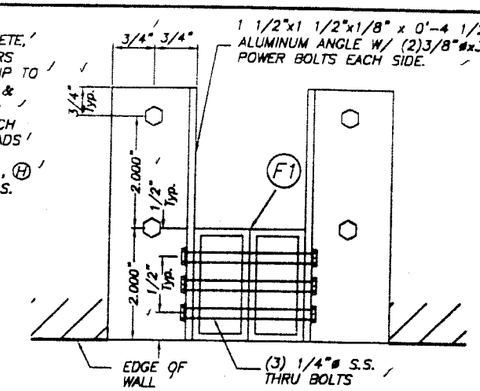

SECTION S2 – S2

SCALE : 1/4" = 1"

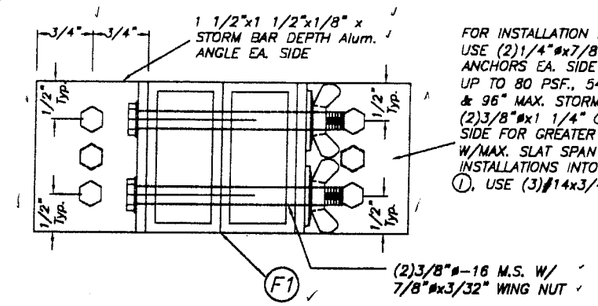

SECTION S – S (FOR REMOVABLE STORM BAR)

SCALE : 1/2" = 1"

* 1/4"ø-20 OR 3/8"ø-16 MACHINE SCREWS USED JOINTLY W/ 1/4"øx7/8" OR 3/8"øx1 1/4" CALK-IN ANCHORS RESPECTIVELY SHALL BE LEFT TOGETHER W/ ANCHORS AT THE TIME STORM BARS ARE REMOVED. (SEE DET. A).

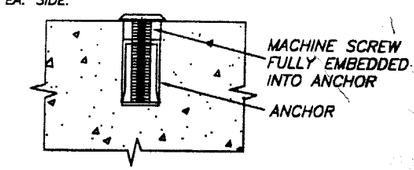

DETAIL A

SCALE : 1/2" = 1"

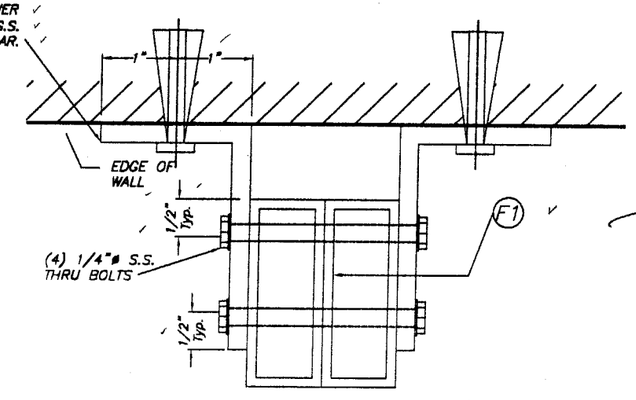

SECTION S1 - S1

SCALE : 1/2" = 1"

PRODUCT REVIEWED as complying with the Florida Building Code Acceptance No. 05-0802.04 Expiration Date 03/29/11 By Miami Dade Product Control Division

PRODUCT REVISED as complying with the Florida Building Code Acceptance No. 03-0106.17 Expiration Date 03/29/06 By Miami Dade Product Control Division

F.B.C. (H.V.H.Z.) / MIAMI-DADE COUNTY

TILTECO INC.
TILLIT TESTING & ENGINEERING COMPANY
6595 N.W. 36th. St., Ste. 217 – VIRGINIA GARDENS, FL 33166
Phone : (305)871-1530 . Fax : (305)871-1531
EB-0008719
WALTER A. TILLIT Jr., P. E.
FLORIDA Lic. # 44167

11/8/02

40mm SLAT ROLL-UP SHUTTER

AS SHOWN SCALE

WEATHER GUARD, INC.
305 DIVISION AVENUE
ORMOND BEACH, FL. 32174

11/7/02 DATE

02-512 DRAWING No

REV. No	DESCRIPTION	DATE	REV. No	DESCRIPTION	DATE
1	OLD 00-304	11/7/02	3		
2	–	–	4		

SHEET 5A OF 12

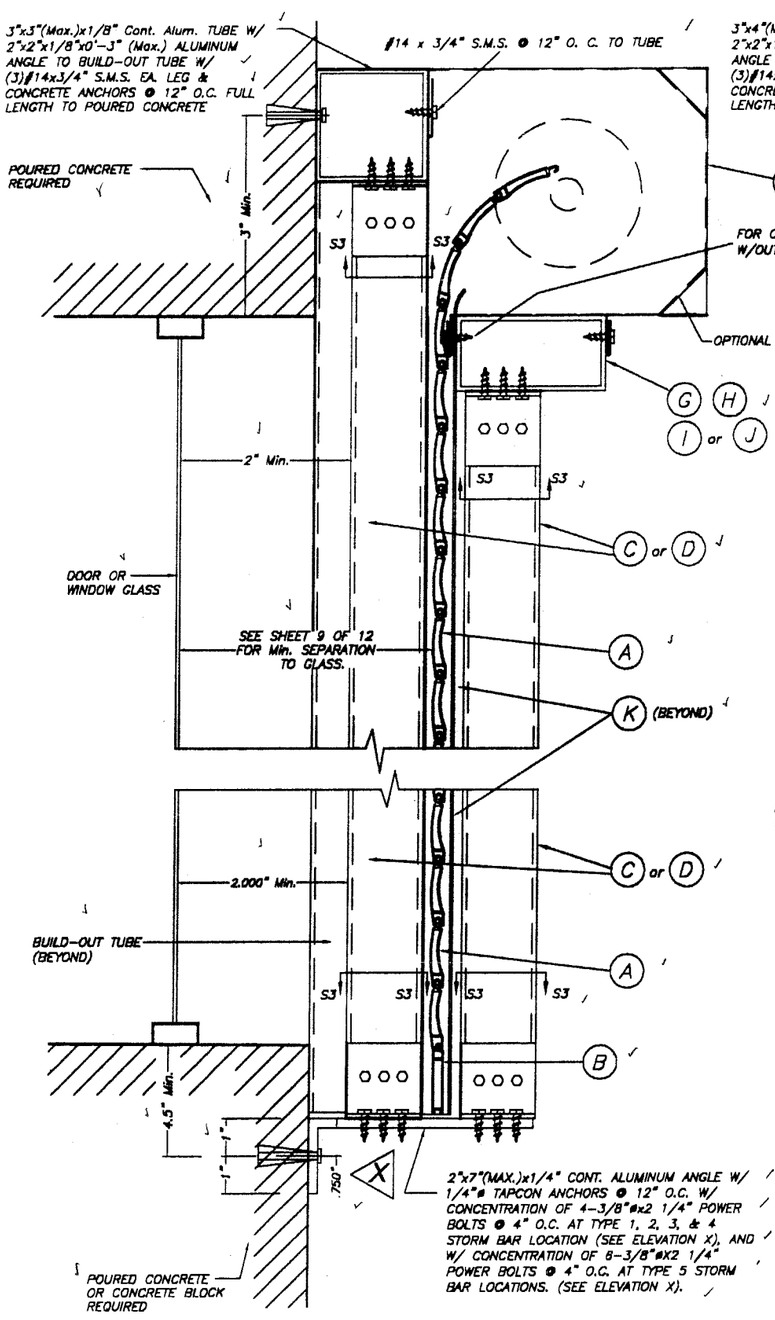

CASE I

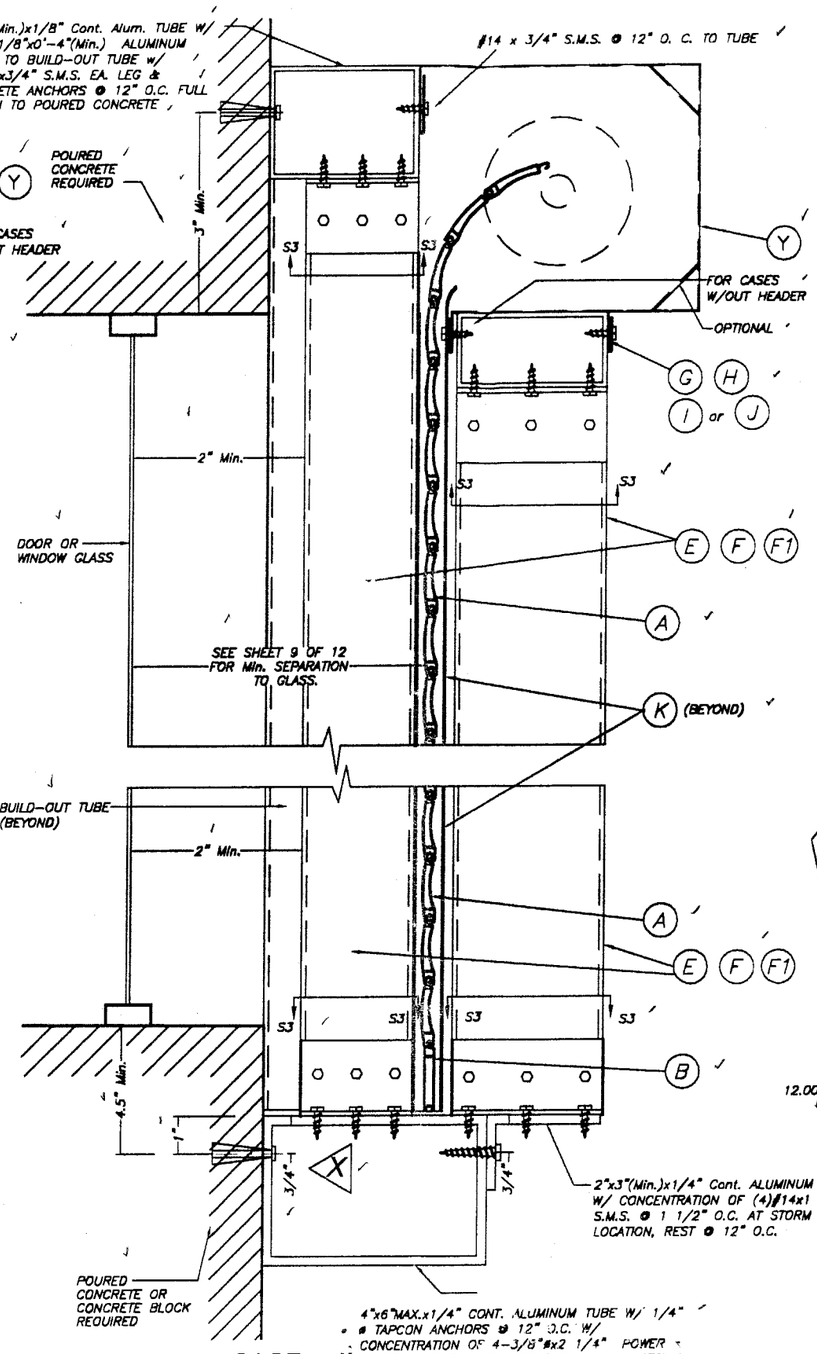

CASE II

FIXED STORM BAR CONNECTION AT BUILD-OUT INSTALLATIONS W/SHEET METAL SCREWS

SCALE : 1/4" = 1"

NOTE:
SINGLE SPAN SECTIONS AND DETAILS ARE SIMILAR TO ABOVE SHOWN WITHOUT STORM BAR & HEADERS.

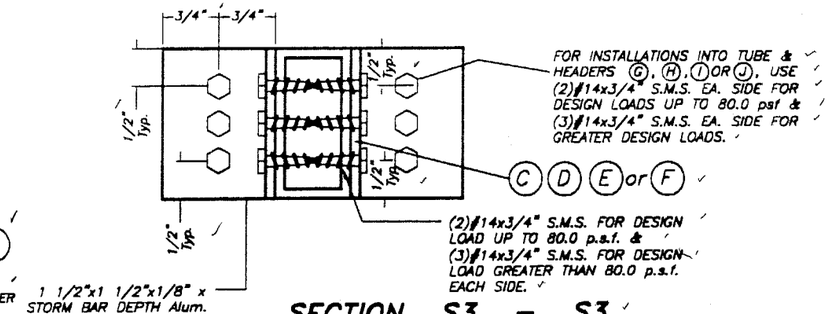

SECTION S3 - S3

SCALE : 1/2" = 1"

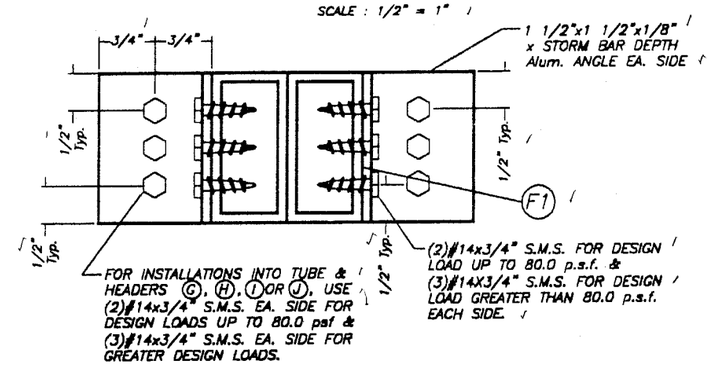

SECTION S3 - S3

SCALE : 1/2" = 1"

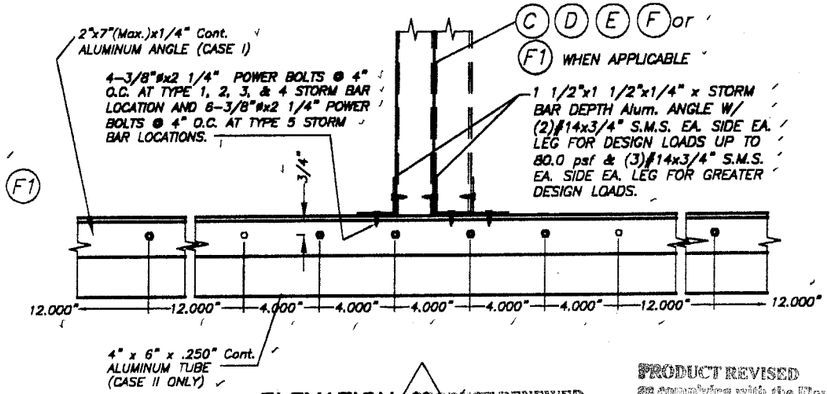

ELEVATION X

SCALE : 1/8" = 1"

PRODUCT RENEWED as complying with the Florida Building Code Acceptance No 03-0002.04 Expiration Date 03/29/11 By Miami Dade Product Control Division

PRODUCT REVISED as complying with the Florida Building Code Acceptance No 03-0106.17 Expiration Date 03/29/06 By Miami Dade Product Control Division

F.B.C. (H.V.H.Z.) / MIAMI-DADE COUNTY

TILLECO INC.
TILLIT TESTING & ENGINEERING COMPANY
6595 N.W. 36th. St., Ste. 217 - VIRGINIA GARDENS, FL. 33166
Phone : (305)871-1530 . Fax : (305)871-1531
EB-0006719
WALTER A. TILLIT Jr., P. E.
FLORIDA Lic. # 44167

11/18/02

40mm SLAT ROLL-UP SHUTTER

WEATHER GUARD, INC.
305 DIVISION AVENUE
ORMOND BEACH, FL. 32174

REV. No	DESCRIPTION	DATE	REV. No	DESCRIPTION	DATE
1	OLD 00-304	11/7/02	3		
2	-	-	4		

AS SHOWN SCALE

11/7/02 DATE

02-512 DRAWING No

SHEET 6 OF 12

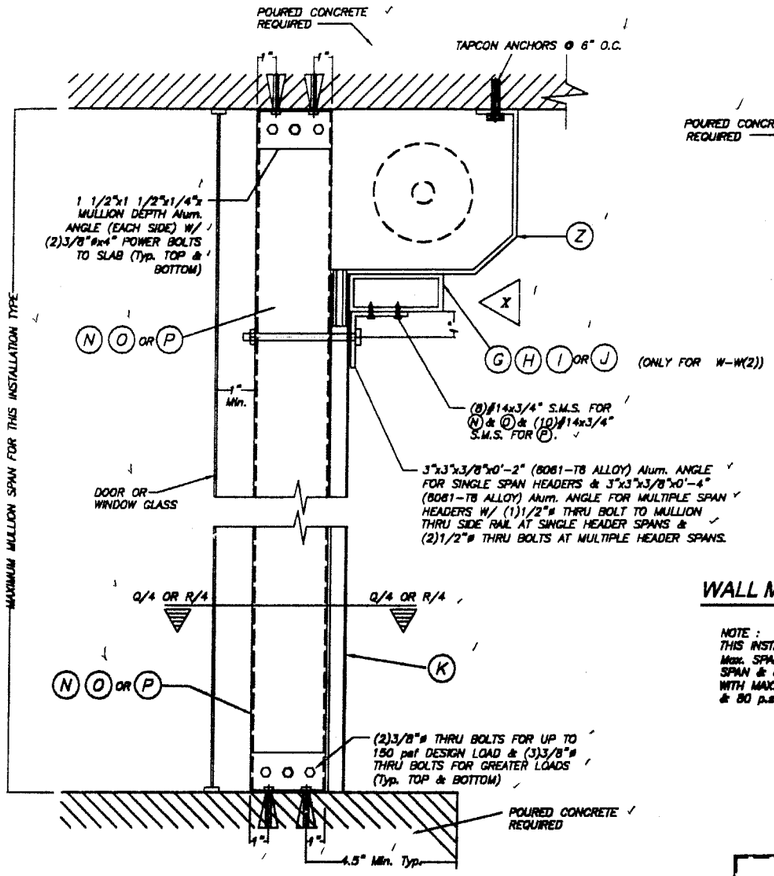

FLOOR/CEILING MOUNTING : SECTION W-W (1), W/O HEADER SECTION W-W (2), W/HEADER

SCALE : 1/8" = 1"

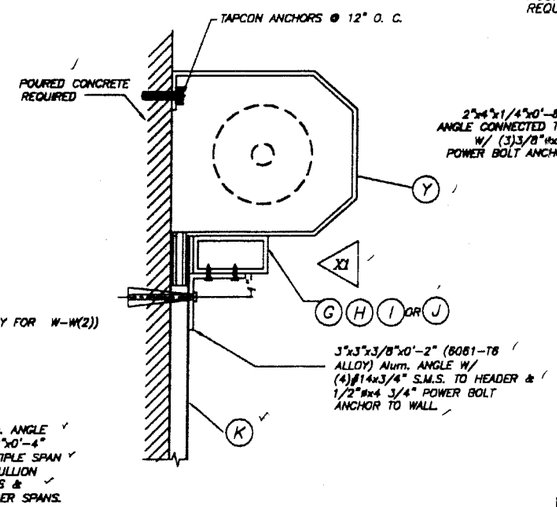

WALL MOUNTING : SECTION W-W (3)

SCALE : 1/8" = 1"

NOTE :
THIS INSTALLATION IS ONLY VALID FOR STORM BARS WITH Max. SPAN = 8'-0", HEADERS WITH 12'-0" Max. SINGLE SPAN & 80 p.s.f. MAXIMUM DESIGN LOAD. OR STORM BARS WITH MAX. SPAN = 8'-0", HEADERS WITH 15'-0" SINGLE & 80 p.s.f. MAXIMUM DESIGN LOAD.

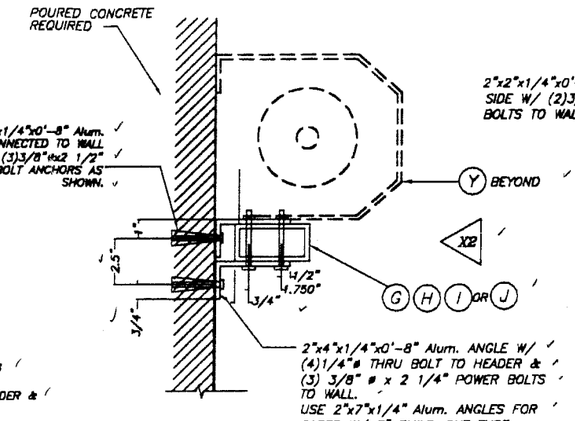

WALL MOUNTING : SECTION W-W(3)

SCALE : 1/8" = 1"

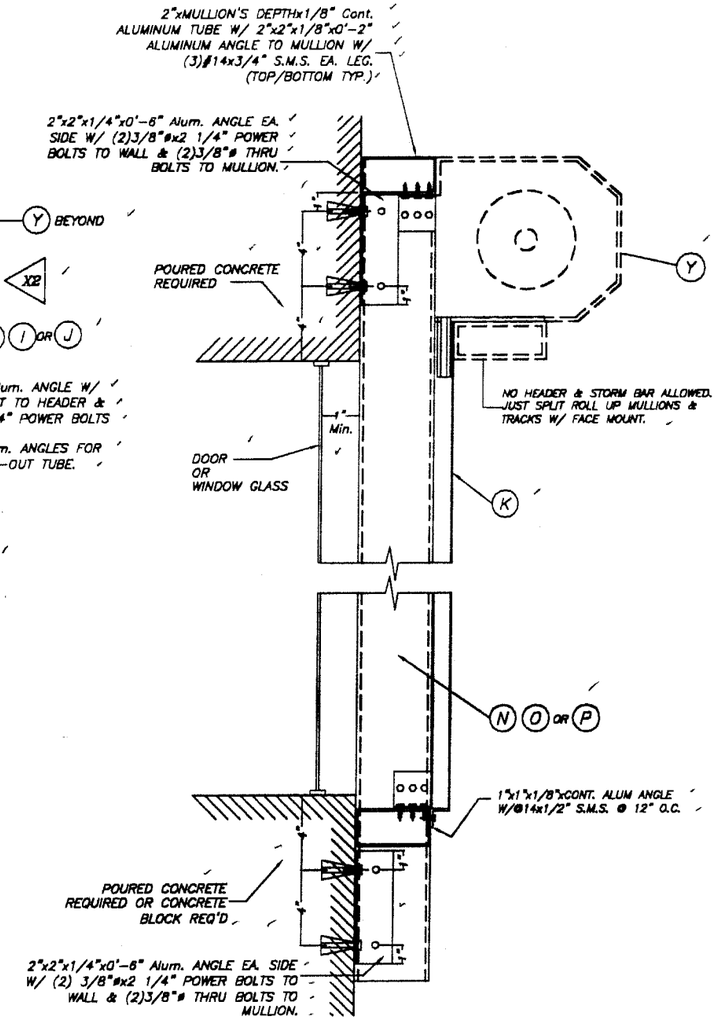

WALL MOUNTING : MULLION CONNECTION AT TOP & BOTTOM : SECTION W-W (1)

SCALE : 1/8" = 1"

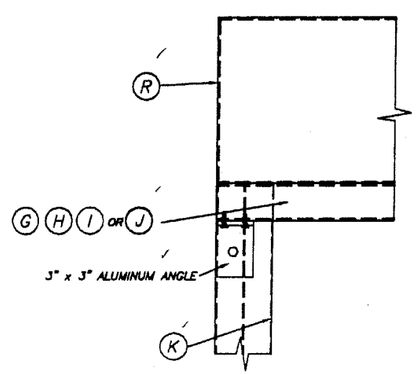

ELEVATION X1

SCALE : 1/8" = 1"

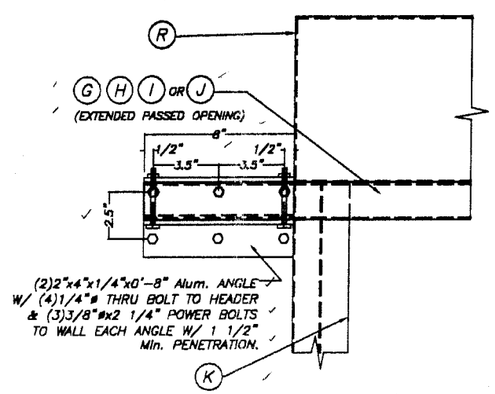

ELEVATION X2

SCALE : 1/8" = 1"

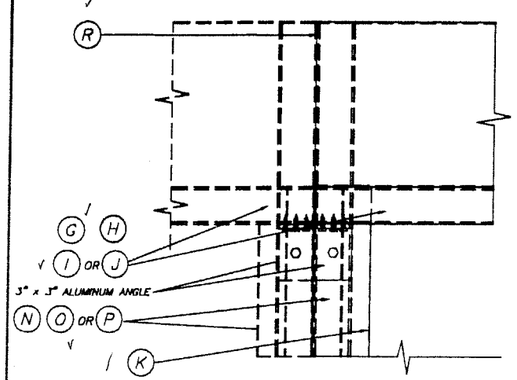

ELEVATION X

SCALE : 1/8" = 1"

TYPICAL HEADER CONNECTION AT ENDS: SECTIONS W-W

12/19/02

PRODUCT RENEWED
as complying with the Florida Building Code:
Acceptance No. 05-0802.04
Expiration Date 03/29/11
By
Miami Dade Product Control Division

PRODUCT REVISED
as complying with the Florida Building Code
Acceptance No. 03-0106.17
Expiration Date 03/29/05
By
Miami Dade Product Control Division

F.B.C. (H.V.H.Z.) / MIAMI-DADE COUNTY

TILLECO INC.
TILLIT TESTING & ENGINEERING COMPANY
6595 N.W. 36th. St., Ste. 217 - VIRGINIA GARDENS, Fl. 33166
Phone : (305)871-1530 . Fax : (305)871-1531
EB-0006719
WALTER A. TILLIT Jr., P. E.
FLORIDA Lic. # 44167

40mm SLAT ROLL-UP SHUTTER

WEATHER GUARD, INC.
305 DIVISION AVENUE
ORMOND BEACH, FL. 32174

REV. No	DESCRIPTION	DATE	REV. No	DESCRIPTION	DATE
1	OLD 00-304	11/7/02	3		
2	-	-	4		

AS SHOWN
SCALE

11/7/02
DATE

02-512
DRAWING No

SHEET 7 OF 12

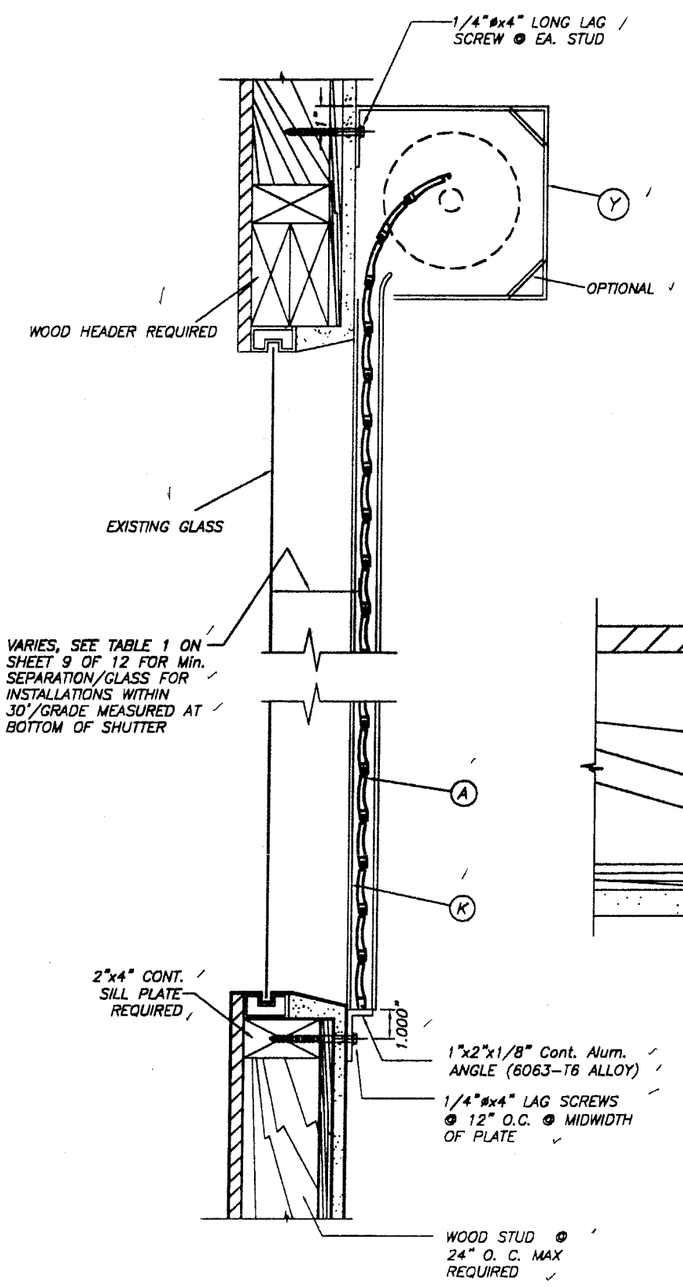

WALL MOUNTING INSTALLATION

SINGLE SPAN CONDITION

N. T. S.

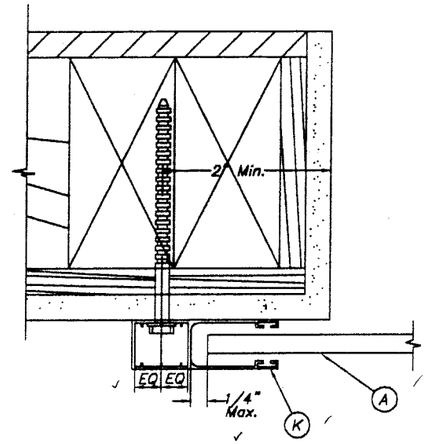

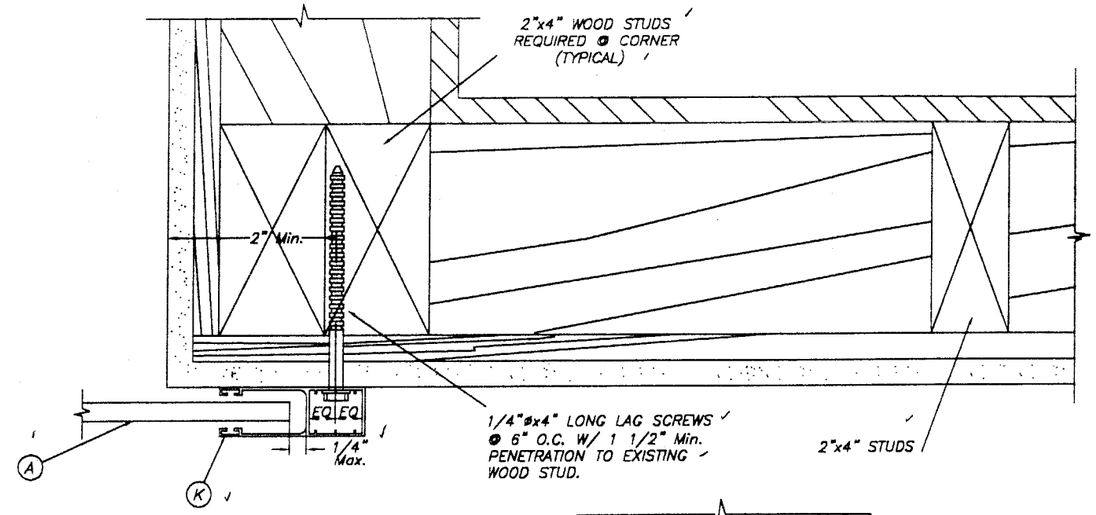

PLAN A (SECTION)

WALL MOUNT

SCALE : 3/8" = 1"

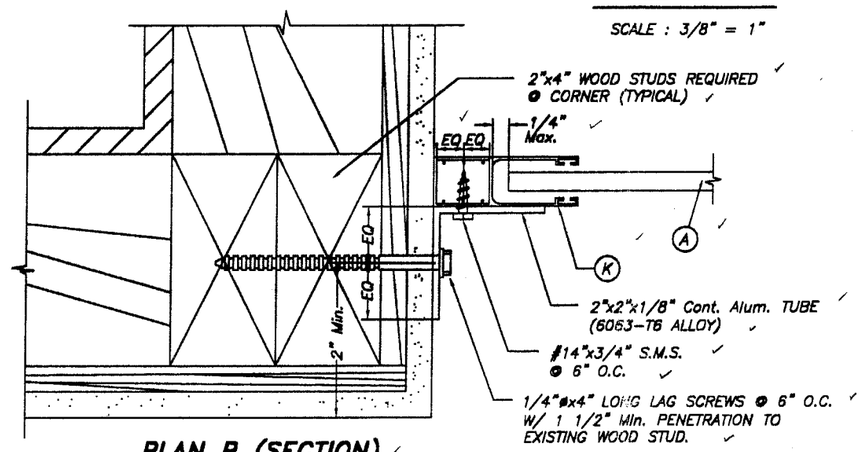

PLAN B (SECTION)

INSIDE MOUNT

SCALE : 3/8" = 1"

NOTES:

1. INSTALLATIONS ARE ONLY VALID FOR BUILDINGS WITH DESIGN LOADS UP TO 75.0 psf.
2. FOR NEW FRAME CONSTRUCTION: WOOD MEMBER TO BE SOUTHERN PINE No. 2 W/ SPECIFIC DENSITY OF 0.55 OR EQUAL.
3. MINIMUM PENETRATION OF LAG SCREWS INTO WOOD MEMBER TO BE 1 1/2".

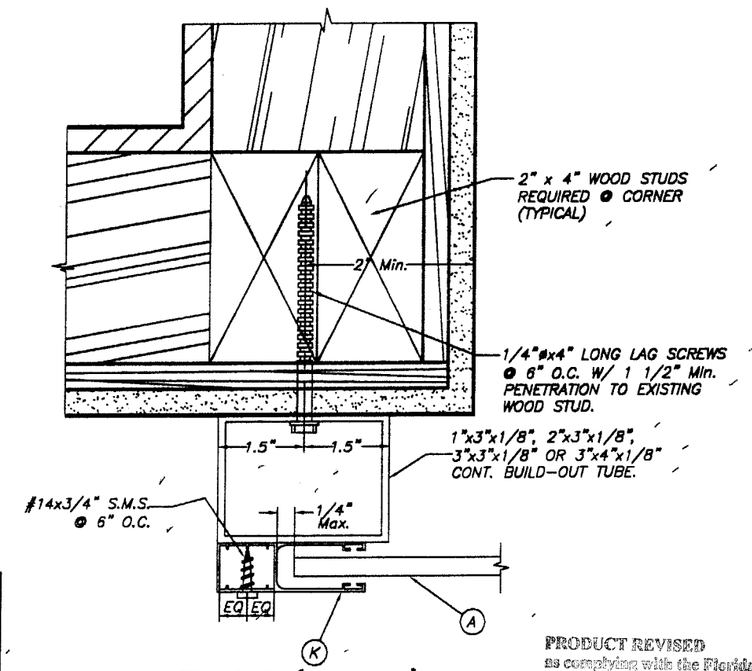

PLAN C (SECTION)

BUILD-OUT

SCALE : 3/8" = 1"

PRODUCT RENEWED as complying with the Florida Building Code Acceptance No. 05-0802.04 Expiration Date 03/29/11 By Miami Dade Product Control Division

PRODUCT REVISED as complying with the Florida Building Code Acceptance No. 03-0106.17 Expiration Date 03/29/06 By Miami Dade Product Control Division

F.B.C. (H.V.H.Z.) / MIAMI-DADE COUNTY

TILTECO INC.
TILLIT TESTING & ENGINEERING COMPANY
6593 N.W. 38th. St., Ste. 217 - VIRGINIA GARDENS, FL 33166
Phone : (305)871-1530 . Fax : (305)871-1531
EB-0006719
WALTER A. TILLIT Jr., P. E.
FLORIDA Lic. # 44167

11/11/02

40mm SLAT ROLL-UP SHUTTER

WEATHER GUARD, INC.
305 DIVISION AVENUE
ORMOND BEACH, FL. 32174

REV. No	DESCRIPTION	DATE	REV. No	DESCRIPTION	DATE
1	OLD 00-304	11/7/02	3		
2	-	-	4		

AS SHOWN
SCALE

11/7/02
DATE

02-512
DRAWING No

SHEET 8 OF 12

SLAT PERFORMANCE CHART
MAXIMUM NEGATIVE DESIGN PRESSURE RATING "W" (p. s. f.) AND CORRESPONDING MAXIMUM SLAT SPAN "L" FOR TYPE 1 SLAT

(USE NEGATIVE PRESSURE VALUES AS PER ASCE 7-98)

SLAT TYPE / Max. DESIGN LOAD "W" (p.s.f.)	MAXIMUM SLAT SPAN	MINIMUM SEPARATION TO GLASS	
	SINGLE & MULTIPLE UNIT *	SINGLE & MULTIPLE UNIT **	SINGLE & MULTIPLE UNIT ***
40.0	4'-2"	2 3/4"	2 3/4"
45.0	4'-0"	2 5/8"	2 5/8"
50.0	3'-11"	2 5/8"	2 5/8"
55.0	3'-9"	2 1/2"	2 1/2"
60.0	3'-8"	2 1/2"	2 1/2"
65.0	3'-6"	2 1/2"	2 1/2"
70.0	3'-5"	2 3/8"	2 3/8"
75.0	3'-3"	2 3/8"	2 3/8"
80.0	3'-2"	2 3/8"	2 3/8"
85.0	3'-1"	2 1/4"	2 1/4"
90.0	3'-0"	2 1/4"	2 1/4"
95.0	2'-11"	2 1/4"	2 1/4"
100.0	2'-10"	2 1/4"	2 1/4"

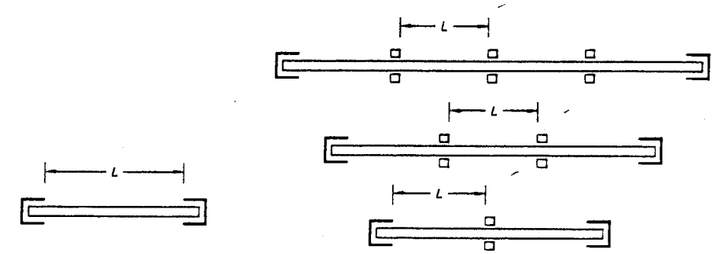

SINGLE SPAN

MULTIPLE SPAN

SPAN LAYOUT

* SPANS VALID FOR EVERY INSTALLATION LOCATED AT ANY ELEVATION OF BUILDING MEASURED AT BOTTOM OF SHUTTER. MINIMUM SEPARATION TO GLASS FOR SINGLE AND MULTIPLE UNITS SHALL BE MEASURED FROM BACK OF SLAT TO GLASS.

** MINIMUM SEPARATION TO GLASS FOR SHUTTERS INSTALLED WITHIN THE FIRST 30'-0" ELEVATION OF BUILDING AND MAXIMUM SPAN. SEE TABLE 1 FOR Min. SEPARATION TO GLASS FOR SPANS LESS THAN THE Max. ALLOWED.

*** MINIMUM SEPARATION TO GLASS FOR SHUTTERS INSTALLED ABOVE 30'-0" ELEVATION OF BUILDING, MEASURED AT BOTTOM OF SHUTTER.

TABLE 1:

SLAT SPAN (ft.)	MINIMUM SEPARATION TO GLASS
36" OR LESS	2 1/4"
> 36" TO 48"	2 5/8"
> 48" TO 50"	2 3/4"

PRODUCT RENEWED
as complying with the Florida Building Code
Acceptance No. 05-0502.04
Expiration Date 03/29/11
By
Miami Dade Product Control Division

PRODUCT REVISED
as complying with the Florida Building Code
Acceptance No. 03-0106.17
Expiration Date 03/29/06
By
Miami Dade Product Control Division

F.B.C. (H.V.H.Z.) / MIAMI-DADE COUNTY

11/19/02

TILTECO INC.
TILLIT TESTING & ENGINEERING COMPANY
6595 N.W. 36th. St., Ste. 217 - VIRGINIA GARDENS, FL 33166
Phone : (305)871-1530 . Fax : (305)871-1531
EB-0006719
WALTER A. TILLIT Jr., P. E.
FLORIDA Lic. # 44167

40mm SLAT ROLL-UP SHUTTER

AS SHOWN
SCALE

WEATHER GUARD, INC.
305 DIVISION AVENUE
ORMOND BEACH, FL. 32174

11/7/02
DATE

02-512
DRAWING No

REV. No	DESCRIPTION	DATE	REV. No	DESCRIPTION	DATE
1	OLD 00-304	11/7/02	3		
2	-	-	4		

SHEET 9 OF 12

STORM BAR LOADING CHART

MAXIMUM DESIGN PRESSURE RATING "W" (p. s. f.) AND CORRESPONDING MAXIMUM SPAN "L" FOR A GIVEN TYPE OF STORM BAR AND STORM BAR SPACING.

(USE NEGATIVE PRESSURE VALUES AS PER ASCE 7-98)

MAX. SPAN FOR STORM BARS W/REGULAR CONCRETE ANCHORS

MAXIMUM DESIGN LOAD "W" (p.s.f.)	(C) TYPE 1 STORM BAR 2" x 2" x 1/4"		(D) TYPE 2 STORM BAR 2" x 3" x 1/8"		(E) TYPE 3 STORM BAR 2" x 4" x 1/8"		(F) TYPE 4 STORM BAR 2" x 4" x 1/4"		(F1) TYPE 5 STORM BAR (2) 2" x 4" x 1/4"	
	* STORM BAR SPACING		* STORM BAR SPACING		* STORM BAR SPACING		* STORM BAR SPACING		* STORM BAR SPACING	
	≤ 3'-0"	3' TO 4'	≤ 3'-0"	3' TO 4'	≤ 3'-0"	3' TO 4'	≤ 3'-0"	3' TO 4'	≤ 3'-0"	3' TO 4'
40	7'-7"	7'-1"	8'-0"	8'-0"	10'-0"	9'-6"	11'-10"	11'-0"	14'-1"	13'-1"
45	7'-5"	6'-11"	8'-0"	7'-9"	10'-0"	9'-3"	11'-6"	10'-8"	13'-8"	12'-9"
50	7'-3"	6'-9"	8'-0"	7'-7"	9'-8"	9'-0"	11'-2"	10'-5"	13'-4"	12'-5"
55	7'-0"	6'-7"	7'-11"	7'-5"	9'-6"	8'-10"	10'-11"	10'-2"	13'-0"	12'-1"
60	6'-11"	6'-5"	7'-9"	7'-3"	9'-3"	8'-7"	10'-8"	10'-0"	12'-9"	11'-10"
65	6'-9"	6'-3"	7'-7"	7'-1"	9'-1"	8'-5"	10'-6"	9'-9"	12'-6"	11'-7"
70	6'-8"	6'-2"	7'-6"	6'-10"	8'-11"	8'-3"	10'-4"	9'-7"	12'-3"	11'-5"
75	6'-6"	6'-1"	7'-4"	6'-7"	8'-9"	8'-1"	10'-1"	9'-5"	12'-0"	11'-2"
80	6'-5"	6'-0"	7'-3"	6'-5'	8'-7"	7'-10"	9'-11"	9'-3"	11'-10"	11'-0"
85	6'-4"	5'-11"	7'-1"	6'-2"	8'-6"	7'-7"	9'-10"	9'-2"	11'-8"	10'-10"
90	6'-3"	5'-10"	6'-11"	6'-0"	8'-4"	7'-5"	9'-8"	9'-0"	11'-6"	10'-8"
95	6'-2"	5'-8"	6'-9"	5'-10"	8'-3"	7'-2"	9'-6"	8'-10"	11'-4"	10'-7"
100	6'-1"	5'-6"	6'-7"	5'-9"	8'-1"	7'-0"	9'-5"	8'-9"	11'-2"	10'-5"

* STORM BAR SPACING SHALL BE SUCH THAT MAXIMUM SLAT SPAN SHALL NOT BE EXCEEDED.

PRODUCT REVISED
as complying with the Florida Building Code
Acceptance No. 03-0106.17
Expiration Date 03/29/06
By
Miami Dade Product Control Division

PRODUCT REVISED
as complying with the Florida Building Code
Acceptance No. 05-0802.04
Expiration Date 03/29/11
By
Miami Dade Product Control Division

F.B.C. (H.V.H.Z.) / MIAMI-DADE COUNTY

1/19/06

TILTECO INC.
TILLIT TESTING & ENGINEERING COMPANY
6595 N.W. 36th. St., Ste. 217 - VIRGINIA GARDENS, FL. 33166
Phone : (305)871-1530 . Fax : (305)871-1531
EB-0006719
WALTER A. TILLIT Jr., P. E.
FLORIDA Lic. # 44167

40mm SLAT ROLL-UP SHUTTER

AS SHOWN
SCALE

WEATHER GUARD, INC.
305 DIVISION AVENUE
ORMOND BEACH, FL. 32174

11/7/02
DATE

02-512
DRAWING No

REV. No	DESCRIPTION	DATE	REV. No	DESCRIPTION	DATE
1	OLD 00-304	11/7/02	3		
2	-	-	4		

SHEET 10 OF 12

HEADER LOADING CHART

MAXIMUM NEGATIVE DESIGN PRESSURE RATING "W" (p. s. f.) AND CORRESPONDING MAXIMUM SPAN "L" FOR A GIVEN TYPE OF HEADER.

(USE NEGATIVE PRESSURE VALUES AS PER ASCE 7-98)

MAXIMUM DESIGN LOAD "W" (p.s.f.)	(G) TYPE 1 HEADER 2" x 3" x 1/8"		(H) TYPE 2 HEADER 2" x 4" x 1/8"			(I) TYPE 3 HEADER 2" x 4" x 1/4"					(J) TYPE 4 HEADER 2" x 6" x 1/8"				
	STORM BAR HEIGHT		STORM BAR HEIGHT			STORM BAR HEIGHT					STORM BAR HEIGHT				
	≤ 5'-0"	5' TO 7'	≤ 5'-0"	5' TO 8'	8' TO 10'	≤ 6'-0"	6' TO 8'	8' TO 10'	10' TO 12'	12' TO 14'	≤ 6'-0"	6' TO 8'	8' TO 10'	10' TO 12'	12' TO 14'
40.0	11'-4"	9'-8"	13'-6"	11'-2"	10'-0"	14'-11"	13'-10"	13'-1"	12'-2"	11'-3"	16'-8"	15'-2"	13'-7"	12'-5"	11'-6"
45.0	10'-9"	9'-1"	13'-1"	10'-6"	9'-5"	14'-5"	13'-5"	12'-6"	11'-5"	10'-7"	16'-2"	14'-4"	12'-9"	11'-8"	10'-10"
50.0	10'-3"	8'-8"	12'-7"	10'-0"	8'-11"	14'-1"	13'-1"	11'-11"	10'-10"	10'-1"	15'-8"	13'-7"	12'-2"	11'-1"	10'-3"
55.0	9'-9"	8'-3"	12'-0"	9'-6"	8'-6"	13'-9"	12'-8"	11'-4"	10'-4"	9'-7"	14'-11"	12'-11"	11'-7"	10'-7"	9'-9"
60.0	9'-4"	7'-11"	11'-6"	9'-1"	8'-2"	13'-5"	12'-2"	10'-10"	9'-11"	9'-2"	14'-4"	12'-5"	11'-1"	10'-1"	9'-4"
65.0	8'-11"	7'-7"	11'-1"	8'-9"	7'-10"	13'-2"	11'-8"	10'-5"	9'-6"	8'-10"	13'-9"	11'-11"	10'-8"	9'-9"	9'-0"
70.0	8'-8"	7'-4"	10'-8"	8'-5"	7'-6"	12'-11"	11'-3"	10'-1"	9'-2"	8'-6"	13'-3"	11'-6"	10'-3"	9'-4"	8'-8"
75.0	8'-4"	7'-1"	10'-3"	8'-2"	7'-3"	12'-6"	10'-10"	9'-9"	8'-10"	8'-3"	12'-9"	11'-1"	9'-11"	9'-0"	8'-4"
80.0	8'-1"	6'-10"	10'-0"	7'-10"	7'-1"	12'-2"	10'-6"	9'-5"	8'-7"	7'-11"	12'-5"	10'-9"	9'-7"	8'-9"	8'-1"
85.0	7'-10"	6'-7"	9'-8"	7'-8"	6'-10"	11'-9"	10'-2"	9'-1"	8'-4"	7'-9"	12'-0"	10'-5"	9'-4"	8'-6"	7'-10"
90.0	7'-7"	6'-5"	9'-5"	7'-5"	6'-8"	11'-5"	9'-11"	8'-10"	8'-1"	7'-6"	11'-8"	10'-1"	9'-0"	8'-3"	7'-8"
95.0	7'-5"	6'-3"	9'-2"	7'-3"	6'-6"	11'-2"	9'-8"	8'-8"	7'-11"	7'-4"	11'-4"	9'-10"	8'-10"	8'-0"	7'-5"
100.0	7'-3"	6'-1"	8'-11"	7'-1"	6'-4"	10'-10"	9'-5"	8'-5"	7'-8"	7'-1"	11'-1"	9'-7"	8'-7"	7'-10"	7'-3"

PRODUCT RENEWED
as complying with the Florida Building Code
Acceptance No. 05-0802.04
Expiration Date 03/29/11
By
Miami Dade Product Control Division

PRODUCT REVISED
as complying with the Florida Building Code
Acceptance No. 03-0106.17
Expiration Date 03/29/09
By
Miami Dade Product Control Division

F.B.C. (H.V.H.Z.) / MIAMI-DADE COUNTY

12/19/02

TILTECO INC.
TILLIT TESTING & ENGINEERING COMPANY
6595 N.W. 36th. St., Ste. 217 - VIRGINIA GARDENS, FL 33166
Phone : (305)871-1530 Fax : (305)871-1531
EB-0006719
WALTER A. TILLIT Jr., P. E.
FLORIDA Lic. # 44167

40mm SLAT ROLL-UP SHUTTER

WEATHER GUARD, INC.
305 DIVISION AVENUE
ORMOND BEACH, FL 32174

REV. No	DESCRIPTION	DATE	REV. No	DESCRIPTION	DATE
1	OLD 00-304	11/7/02	3		
2	–	–	4		

AS SHOWN
SCALE

11/7/02
DATE

02-512
DRAWING No

SHEET 11 OF 12

MULLION LOADING CHART

MAXIMUM DESIGN PRESSURE RATING "W" (p. s. f.) AND CORRESPONDING MAXIMUM SPAN "L"(Ft) FOR A GIVEN TYPE OF MULLION AND MULLION SPACING (Ft.).

(USE NEGATIVE PRESSURE VALUES AS PER ASCE 7-98)

MAXIMUM DESIGN LOAD "W" (p.s.f.)	(N) TYPE 1 MULLION 3" x 4" x 1/8"				(O) TYPE 2 MULLION 4" x 4" x 1/4"				(P) TYPE 3 MULLION 4" x 6" x 1/4"					
	MULLION SPACING				MULLION SPACING				MULLION SPACING					
	≤ 4'-0"	4' TO 5'	5' TO 6'	6' TO 8'	≤ 4'-0"	4' TO 5'	5' TO 6'	6' TO 8'	≤ 4'-0"	4' TO 5'	5' TO 6'	6' TO 8'	8' TO 10'	10' TO 12
40.0	9'-0"	8'-4"	7'-10"	8'-2"	11'-9"	10'-11"	10'-3"	10'-9"	16'-4"	15'-2"	14'-3"	14'-10"	13'-10"	13'-0"
45.0	8'-8"	8'-0"	7'-7"	7'-10'	11'-4"	10'-6"	9'-11"	10'-4"	15'-8"	14'-7"	13'-8"	14'-4"	13'-3"	12'-6"
50.0	8'-4"	7'-9"	7'-3"	7'-7"	10'-11"	10'-2"	9'-7"	9'-10"	15'-2"	14'-1"	13'-3"	13'-10"	12'-10"	12'-1"
55.0	8'-1"	7'-6"	7'-1"	7'-4"	10'-7"	9'-10"	9'-3"	9'-8"	14'-8"	13'-7"	12'-10"	13'-4"	12'-5"	11'-8"
60.0	7'-10"	7'-3"	6'-10"	7'-2"	10'-3"	9'-7"	9'-0"	9'-5"	14'-3"	13'-3"	12'-5"	13'-0"	12'-1"	11'-4"
65.0	7'-8"	7'-1"	6'-8"	7'-0"	10'-0"	9'-4"	8'-9"	9'-2"	13'-11"	12'-11"	12'-2"	12'-8"	11'-9"	11'-1"
70.0	7'-5"	6'-11"	6'-6"	6'-10"	9'-9"	9'-1"	8'-6"	8'-11"	13'-7"	12'-7"	11'-10"	12'-4"	11'-5"	10'-9"
75.0	7'-3"	6'-9"	6'-4"	6'-8"	9'-6"	8'-10"	8'-4"	8'-8"	13'-3"	12'-3"	11'-7"	12'-1"	11'-2"	10'-6"
80.0	7'-2"	6'-7"	6'-3"	6'-6"	9'-4"	8'-8"	8'-2"	8'-6"	12'-11"	12'-0"	11'-4"	11'-10"	10'-11"	10'-4"
85.0	7'-0"	6'-6"	6'-1"	6'-4"	9'-2"	8'-6"	8'-0"	8'-4"	12'-8"	11'-9"	11'-1"	11'-7"	10'-9"	10'-1"
90.0	6'-10"	6'-4"	6'-0"	6'-3"	8'-11"	8'-4"	7'-10"	8'-2"	12'-5"	11'-7"	10'-11"	11'-4"	10'-6"	9'-11"
95.0	6'-9"	6'-3"	5'-11"	6'-2"	8'-10"	8'-2"	7'-9"	8'-0"	12'-3"	11'-4"	10'-8"	11'-2"	10'-4"	9'-9"
100.0	6'-7"	6'-2"	5'-9"	6'-0"	8'-8"	8'-0"	7'-7"	7'-11"	12'-0"	11'-2"	10'-6"	10'-11"	10'-2"	9'-7"

NOTES : REFER TO ELEVATIONS ON SHEET 1 OF 12

1-. FOR MULLIONS INSTALLED W/O STORM BARS

A) MULLION SPACING SHALL BE SUCH THAT MAXIMUM SLAT SPAN SHALL NOT BE EXCEEDED

2-. FOR MULLIONS INSTALLED W/ STORM BARS & HEADERS

A) MULLION SPACING SHALL BE SUCH THAT MAXIMUM HEADER SPAN SHALL NOT BE EXCEEDED

B) STORM BAR SPACING SHALL BE SUCH THAT MAXIMUM SLAT SPAN SHALL NOT BE EXCEEDED

PRODUCT REVIEWED
as complying with the Florida
Building Code
Acceptance No. 05-0802.04
Expiration Date 03/29/11
By
Miami Dade Product Control
Division

PRODUCT REVISED
as complying with the Florida
Building Code
Acceptance No. 03-0106.17
Expiration Date 03/29/05
By
Miami Dade Product Control
Division

F.B.C. (H.V.H.Z.) / MIAMI-DADE COUNTY

11/19/02

TILTECO INC.
TILLIT TESTING & ENGINEERING COMPANY
6395 N.W. 36th. St., Ste. 217 - VIRGINIA GARDENS, FL. 33166
Phone : (305)871-1530 . Fax : (305)871-1531
EB-0006719
WALTER A. TILLIT Jr., P. E.
FLORIDA Lic. # 44167

40mm SLAT ROLL-UP SHUTTER

AS SHOWN
SCALE

WEATHER GUARD, INC.
305 DIVISION AVENUE
ORMOND BEACH, FL. 32174

11/7/02
DATE

02-512
DRAWING No

REV. No	DESCRIPTION	DATE	REV. No	DESCRIPTION	DATE
1	OLD 00-304	11/7/02	3		
2	-	-	4		

SHEET 12 OF 12