MIAMI-DADE

BUILDING CODE COMPLIANCE OFFICE (BCCO)
PRODUCT CONTROL DIVISION

MIAMI-DADE COUNTY, FLORIDA
METRO-DADE FLAGLER BUILDING
140 WEST FLAGLER STREET, SUITE 1603
MIAMI, FLORIDA 33130-1563
(305) 375-2901 FAX (305) 375-2908

NOTICE OF ACCEPTANCE (NOA)

Kaycan
1 Memorial Drive.
Richford, VT 05476

SCOPE:

This NOA is being issued under the applicable rules and regulations governing the use of construction materials. The documentation submitted has been reviewed by Miami-Dade County Product Control Division and accepted by the Board of Rules and Appeals (BORA) to be used in Miami Dade County and other areas where allowed by the Authority Having Jurisdiction (AHJ).

This NOA shall not be valid after the expiration date stated below. The Miami-Dade County Product Control Division (In Miami Dade County) and/or the AHJ (in areas other than Miami Dade County) reserve the right to have this product or material tested for quality assurance purposes. If this product or material fails to perform in the accepted manner, the manufacturer will incur the expense of such testing and the AHJ may immediately revoke, modify, or suspend the use of such product or material within their jurisdiction. BORA reserves the right to revoke this acceptance, if it is determined by Miami Dade County Product Control Division that this product or material fails to meet the requirements of the applicable building code. This product is approved as described herein, and has been designed to comply with the High Velocity Hurricane Zone of the Florida Building Code.

DESCRIPTION: Dutchlap 4.5 Vinyl Siding

APPROVAL DOCUMENT: Drawing No.**KBP-DC-100**, Sheets 1 of 1, titled "Ocean Park D4.5 Dutchlap Vinyl Siding." dated 07/05/00 with no revisions, prepared by Kaycan Building Products signed and sealed by A. N. Reeves PE, bearing the Miami-Dade County Product Control Approval stamp with the NOA number and approval date by the Miami-Dade County Product Control Division.

MISSILE IMPACT RATING: Large and Small Missile Impact.

LABELING: Each unit shall bear a permanent label with the manufacturer's name or logo, city, state and following statement: "Miami-Dade County Product Control Approved or MDCPCA", unless otherwise noted herein.

RENEWAL of this NOA shall be considered after a renewal application has been filed and there has been no change in the applicable building code negatively affecting the performance of this product.

TERMINATION of this NOA will occur after the expiration date or if there has been a revision or change in the materials, use, and/or manufacture of the product or process. Misuse of this NOA as an endorsement of any product, for sales, advertising or any other purposes shall automatically terminate this NOA. Failure to comply with any section of this NOA shall be cause for termination and removal of NOA.

ADVERTISEMENT: The NOA number preceded by the words Miami-Dade County, Florida, and followed by the expiration date may be displayed in advertising literature. If any portion of the NOA is displayed, then it shall be done in its entirety.

INSPECTION: A copy of this entire NOA shall be provided to the user by the manufacturer or its distributors and shall be available for inspection at the job site at the request of the Building Official.

This NOA consists of this page, evidence page as well as approval document mentioned above.

The submitted documentation was reviewed by **Candido F. Font PE.**

4/20/06

PRODUCT CONTROL ACCEPTED

NOA No: 05-0805.01
Expiration Date: April 20, 2011
Approval Date: April 20, 2006

Kaycan.

NOTICE OF ACCEPTANCE: EVIDENCE SUBMITTED

A. DRAWINGS

1. Drawing No.**KBP-DC-101**, Sheets 1 of 1, titled "Elegance D5 Dutchlap Vinyl Siding" dated 07/05/00 & 03/27/03, with no revisions, prepared by Kaycan Building Products signed and sealed by A.N. Reeves, P.E.

B. TESTS

	Laboratory	Test	Date	Signature
1.	AT-55983.01-106-18	ASTM D3679	01/03/06	J. A. Reed, PE.
2.	AT-55983.01-106-18 .	ASTM G155	01/03/06	J. A. Reed, PE.
3.	AT-55983.01-106-18	ASTM D638	01/03/06	J. A. Reed, PE
4.	AT-55983.01-106-18	ASTM D2843	01/03/06	J. A. Reed, PE.
5.	AT-55983.01-106-18	ASTM D1929	01/03/06	J. A. Reed, PE
6.	AT-55983.01-106-18	ASTM D635	01/03/06	J. A. Reed, PE
7.	AT-55980.04-122-18	PA 202 & 203	07/15/05	S. M. Urich, PE

C. CALCULATION

1. Fastener Installation Analysis, sheets 1 through 3, dated 07/21/05, project No. 05020010, signed and sealed by A. N. Reeves PE.

D. QUALITY ASSURANCE

1. Building Code Compliance Office.

E. STATEMENTS

1. Code compliance letters issued by H. R. Engineering, Inc. dated 03/08/05, signed and sealed by A. N. Reeves, PE.
2. No financial interest letter issued by H. R. Engineering Inc, dated 07/21/05 signed by A. N. Reeves PE and notarized by C. F. King.
3. Test compliance letter issued by Architectural Testing on 07/27/05, signed and sealed by S. M. Urich PE.

04/20/06

Candido F. Font PE.
Sr. Product Control Examiner
NOA No: 05-0805.01
Expiration Date: April 20, 2011
Approval Date: April 20, 2006

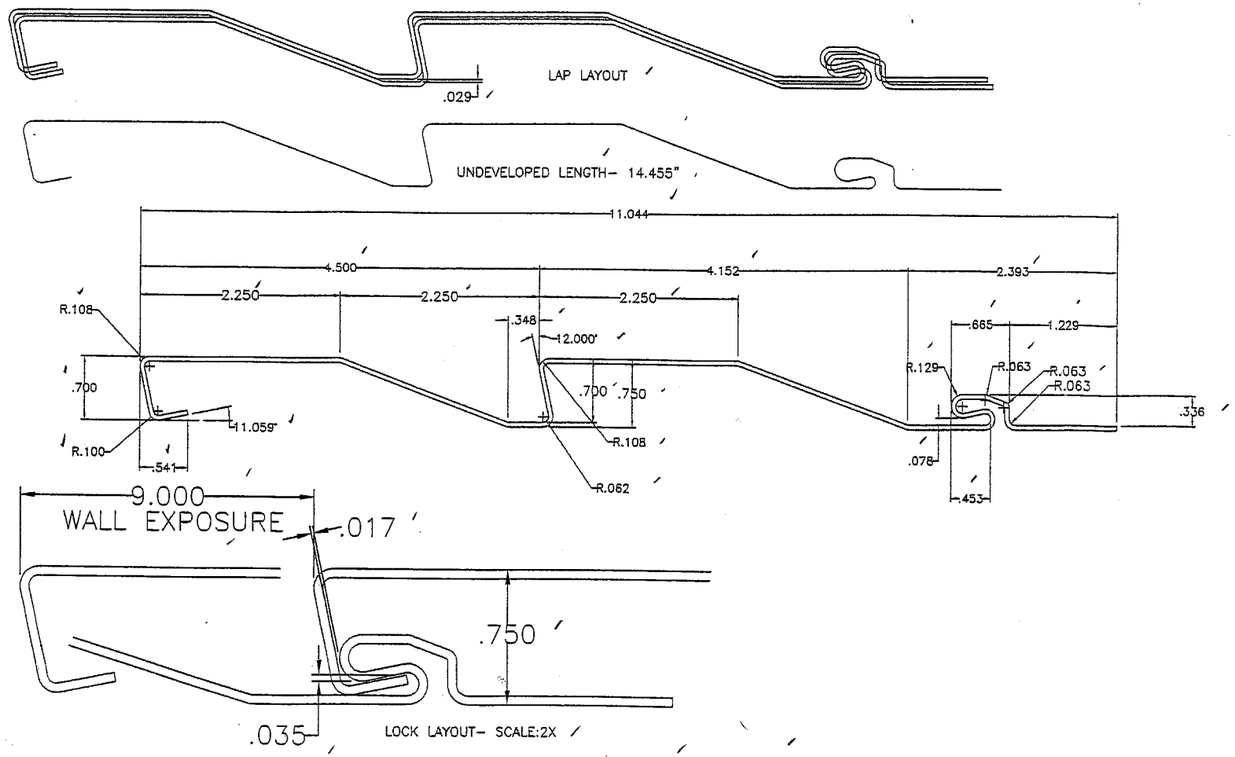

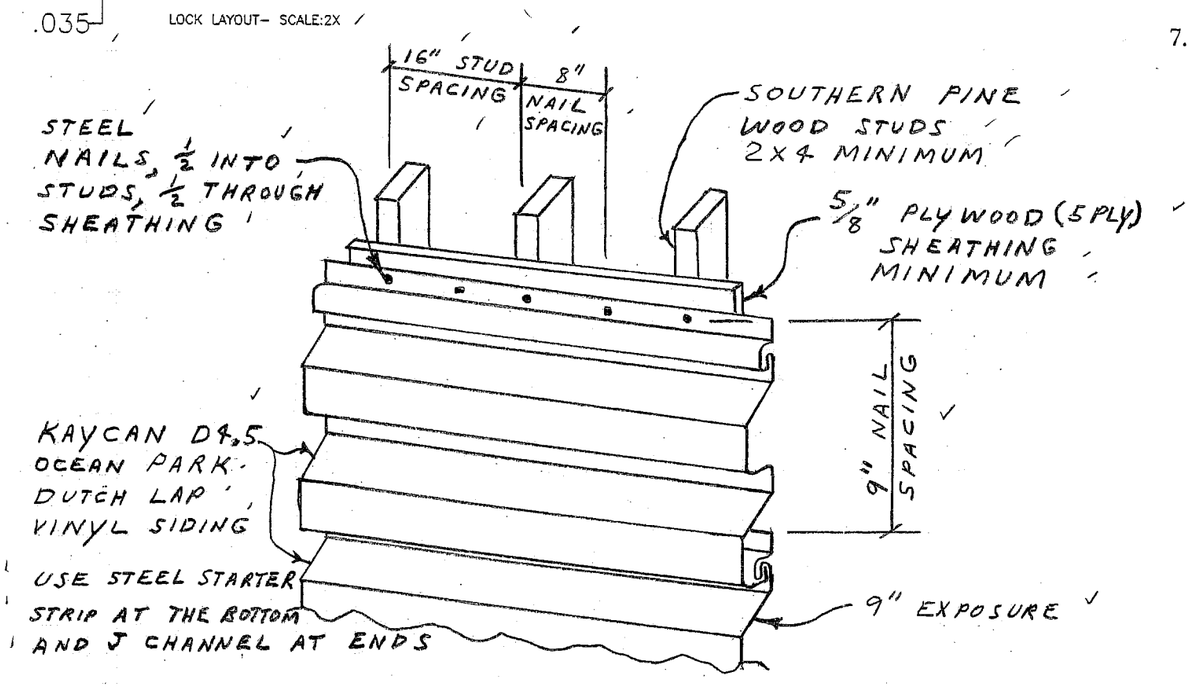

SIDING INSTALLATION DETAIL – OCEAN PARK D4.5
NOT TO SCALE

GENERAL NOTES

1. THE ABOVE INSTALLATION HAS ALLOWABLE DESIGN WIND PRESSURES OF +/- 66.6 PSF AND IS IN CONFORMANCE WITH FLORIDA BUILDING CODE 2004.

2. INSTALLATION FASTENERS ARE GALVANIZED STEEL ROOFING NAILS 1 ½" LONG WITH 1/8" DIAMETER SHANKS AND 3/8" DIAMETER HEADS.

3. KAYCAN VINYL SIDING/SOFFIT IS MANUFACTURED FROM A FORMULATED P.V.C. POWDER COMPOUND MEETING THE SPECIFICATIONS OF ASTM D3679.

4. – WALLS AND SOFFIT RECEIVING VINYL SIDING/SOFFIT SHALL BE CHECKED FOR STRUCTURAL ADEQUACY, CRACKS AND/OR DEFECTS SHALL BE ELIMINATED.

5. – WALLS SHALL BE WATER PROOFED WITH EQUIVALENT OF 15 POUND FELT AS DESCRIBED IN SECTION 2121.6.2.1 OF THE FBC.

6. – WALLS AND SOFFIT WHERE VINYL SIDING/SOFFIT WILL BE INSTALLED SHALL BE DESIGNED BY AN ENGINEER OR ARCHITECT PER THE FBC AND THE REQUIREMENTS OF THESE NOA.

7. – INSTALLATION OF SIDING/SOFFIT ACCESSORIES SUCH AS CORNER POSTS, STARTER STRIPS, TRIMS AROUND OPENINGS SHALL BE DONE IN ACCORDANCE WITH THE MANUFACTURES INSTRUCTIONS AND THE FBC.

Approved as complying with the Florida Building Code
Date 04/20/06
NOA# 03-0805.01
Miami-Dade Permit Control Division
By

PRODUCT CALIPER– .050+–.002

Allen N. Reuter
20 MARCH 2006

KAYCAN BUILDING PRODUCTS

This Drawing and/or Design is the property of Kaycan Building Products and is not to be copied or used by others without the expressed written consent of Kaycan Building Products.

Drawn By	Date 7–5–00	OCEAN PARK D4.5 VINYL SIDING
Checked By	Date	
Approved By	Date	
Scale FULL	Reference	Sheet 1 of 1
		Drawing Number KBP–DC–100