MIAMI-DADE COUNTY

BUILDING CODE COMPLIANCE OFFICE (BCCO)
PRODUCT CONTROL DIVISION

MIAMI-DADE COUNTY, FLORIDA
METRO-DADE FLAGLER BUILDING
140 WEST FLAGLER STREET, SUITE 1603
MIAMI, FLORIDA 33130-1563
(305) 375-2901 FAX (305) 375-2908

NOTICE OF ACCEPTANCE (NOA)

Peachtree Doors & Windows
2744 Ramsey Road
Gainesville, GA 30501

SCOPE:
This NOA is being issued under the applicable rules and regulations governing the use of construction materials. The documentation submitted has been reviewed by Miami-Dade County Product Control Division and accepted by the Board of Rules and Appeals (BORA) to be used in Miami Dade County and other areas where allowed by the Authority Having Jurisdiction (AHJ).

This NOA shall not be valid after the expiration date stated below. The Miami-Dade County Product Control Division (In Miami Dade County) and/or the AHJ (in areas other than Miami Dade County) reserve the right to have this product or material tested for quality assurance purposes. If this product or material fails to perform in the accepted manner, the manufacturer will incur the expense of such testing and the AHJ may immediately revoke, modify, or suspend the use of such product or material within their jurisdiction. BORA reserves the right to revoke this acceptance, if it is determined by Miami-Dade County Product Control Division that this product or material fails to meet the requirements of the applicable building code.

This product is approved as described herein, and has been designed to comply with the Florida Building Code, including the High Velocity Hurricane Zone.

DESCRIPTION: Peachtree Aluminum Clad Wood Fixed Window - Impact

APPROVAL DOCUMENT: Drawing No. **1384**, titled "Peachtree Impact Aluminum Clad Casement Fixed Picture", sheets 1 through 4 of 4, dated 01/25/05, prepared by W.W. Schaeffer Engineering & Consulting, P.A, signed and sealed by Warren W. Schaefer, P.E., bearing the Miami-Dade County Product Control Revision stamp with the Notice of Acceptance number and expiration date by the Miami-Dade County Product Control Division.

MISSILE IMPACT RATING: Large and Small Missile Impact

LABELING: Each unit shall bear a permanent label with the manufacturer's name or logo, city, state and following statement: "Miami-Dade County Product Control Approved", unless otherwise noted herein.

RENEWAL of this NOA shall be considered after a renewal application has been filed and there has been no change in the applicable building code negatively affecting the performance of this product.

TERMINATION of this NOA will occur after the expiration date or if there has been a revision or change in the materials, use, and/or manufacture of the product or process. Misuse of this NOA as an endorsement of any product, for sales, advertising or any other purposes shall automatically terminate this NOA. Failure to comply with any section of this NOA shall be cause for termination and removal of NOA.

ADVERTISEMENT: The NOA number preceded by the words Miami-Dade County, Florida, and followed by the expiration date may be displayed in advertising literature. If any portion of the NOA is displayed, then it shall be done in its entirety.

INSPECTION: A copy of this entire NOA shall be provided to the user by the manufacturer or its distributors and shall be available for inspection at the job site at the request of the Building Official.
This NOA **revises NOA # 05-0127.04** consists of this page 1 and evidence pages E-1, E-2, and E-3, as well as approval document mentioned above.
The submitted documentation was reviewed by **Herminio F. Gonzalez, P.E., Director, BCCO**

PRODUCT CONTROL ACCEPTED 10/12/05

NOA No 05-0811.03
Expiration Date: April 15, 2007
Approval Date: November 03, 2005

Peachtree Doors & Windows

NOTICE OF ACCEPTANCE: EVIDENCE SUBMITTED

A. DRAWINGS

1. Manufacturer's die drawings and sections.
2. Drawing No. **1384**, titled "Peachtree Impact Aluminum Clad Casement Fixed Picture", sheets 1 through 4 of 4, dated 01/25/04, prepared by W.W. Schaeffer Engineering & Consulting, P.A, signed and sealed by Warren W. Schaefer, P.E.

B. TESTS

1. Test reports on 1) Large Missile Impact Test per FBC, TAS 201-94
   2) Cyclic Wind Pressure Loading per FBC, TAS 203-94
   along with the manufacturer's parts drawings, installation diagram and marked-up drawings of a fixed picture casement fixed wood window prepared by Hurricane Test Laboratory, Inc. Test Report No. **HTL-0037-0303-00**, dated 02/28/00, signed and sealed by Vinu J. Abraham, P.E.
   "Submitted under NOA # 05-0127.04"
2. Test reports on 1) Air Infiltration Test, per FBC, TAS 202-94
   2) Uniform Static Air Pressure Test, Loading per FBC, TAS 202-94.
   3) Water Resistance Test, per FBC, TAS 202-94.
   4) Large Missile Impact Test per FBC, TAS 201-94
   5) Cyclic Wind Pressure Loading per FBC, TAS 203-94
   along with the manufacturer's parts drawings, installation diagram and marked-up drawings of three specimens of a direct set wood fixed window prepared by Hurricane Test Laboratory, Inc. Test Report No. **HTL-0037-1104-00**, dated from 10/30/00 to 11/06/00, signed and sealed by Vinu J. Abraham, P.E.
   "Submitted under NOA # 05-0127.04"
3. Test reports on 1) Air Infiltration Test, per TAS 202-94
   2) Uniform Static Air Pressure Test, Loading per FBC, TAS 202-94.
   3) Water Resistance Test, per FBC, TAS 202-94.
   along with the manufacturer's parts drawings, installation diagram and marked-up drawings of one specimen of a fixed casement picture window prepared by Hurricane Test Laboratory, Inc. Test Report No. **HTL-0037-0411-01**, dated 04/10/01, signed and sealed by Vinu J. Abraham, P.E.
   "Submitted under NOA # 05-0127.04"
4. Test report on 1) Large Missile Impact Test per FBC, TAS 201-94
   2) Cyclic Wind Pressure Loading per FBC, TAS 203-94
   along with the manufacturer's parts, sections and marked-up drawings prepared by Hurricane Test Laboratory, Inc. Test Report No. **HTL-0037-0209-98**, dated 02/11/98, signed and sealed by Timothy S. Marshall, P.E.
   "Submitted under NOA # 05-0127.04"

for M Abadie

Herminio F. Gonzalez, P.E.
Director, Building Code Compliance Office
NOA No 05-0811.03
Expiration Date: April 15, 2007
Approval Date: November 03, 2005

NOTICE OF ACCEPTANCE: EVIDENCE SUBMITTED

5. Test report on 1) Uniform Load Static Air Pressure Test, per PA 202-94. along with the manufacturer's parts, sections and marked-up drawings prepared by Architectural Testing, Inc., Test Report No. **ATI-16283-N**, dated 09/01/95, signed and sealed by Allen N. Reeves, P.E.
   "Submitted under NOA # 05-0127.04"

C. CALCULATIONS

1. Anchor calculations and structural analysis, dated 06/06/01, prepared by W.W. Schaeffer Engineering & Consulting, P.A., signed and sealed by Warren Schaeffer, P.E.
   "Submitted under NOA # 05-0127.04"

D. QUALITY ASSURANCE

1. Miami Dade Building Code Compliance Office (BCCO).

E. MATERIAL CERTIFICATIONS

1. Notice of Acceptance No. **02-0521.06**, issued to Globe Amerada Architectural Glass, L.L.C. for their "***Chem-Temp*** ® Chemically Strengthened Glass", approved on 07/18/02 and expiring on 07/18/07.
2. Notice of Acceptance No. **01-0205.02** issued to Solutia Inc. for their "Saflex /Keepsafe Maximum" dated 05/17/01, expiring on 05/21/06.
3. Notice of Acceptance No. **01-0911.01**, issued to Globe Amerada Architectural Glass, L.L.C. for their "Glass-Clad Polycarbonate", approved on 01/03/02 and expiring on 09/03/06.
4. Notice of Acceptance No. **00-0614.09**, issued to Viracon, Inc. for their "HRG-2 Laminated Glass", approved on 11/02/00 and expiring on 10/16/03.

F. STATEMENTS

1. Statement letter of conformance, dated June 8, 2001, signed and sealed by Warren Schaeffer, P.E.
   "Submitted under NOA # 05-0127.04"
2. Statement letter of no financial interest, dated June 8, 2001, signed and sealed by Warren Schaeffer, P.E.
   "Submitted under NOA # 05-0127.04"
3. Laboratory compliance letter for Test Report No. **HTL- 0037-0303-00, HTL- 0037-1104-00 and HTL- 0037-0411-01**, issued by Hurricane Test Laboratory, Inc., dated August 22, 2001, signed and sealed by Vinu J. Abraham, P.E.
   "Submitted under NOA # 05-0127.04"

Herminio F. Gonzalez, P.E.
Director, Building Code Compliance Office
NOA No 05-0811.03
Expiration Date: April 15, 2007
Approval Date: November 03, 2005

Peachtree Doors & Windows

NOTICE OF ACCEPTANCE: EVIDENCE SUBMITTED

G. OTHER

1. Notice of Acceptance No. **05-0127.04**, issued to Peachtree Doors & Windows for their **Peachtree Aluminum Clad Wood Fixed Window - Impact**, approved on 03/31/05 and expiring on 04/15/07.
2. Letter from the consultant, dated September 26, 2005, stating that the product is in compliance with the Florida Building Code (FBC).

for M Khalil

Herminio F. Gonzalez, P.E.
Director, Building Code Compliance Office
NOA No 05-0811.03
Expiration Date: April 15, 2007
Approval Date: November 03, 2005

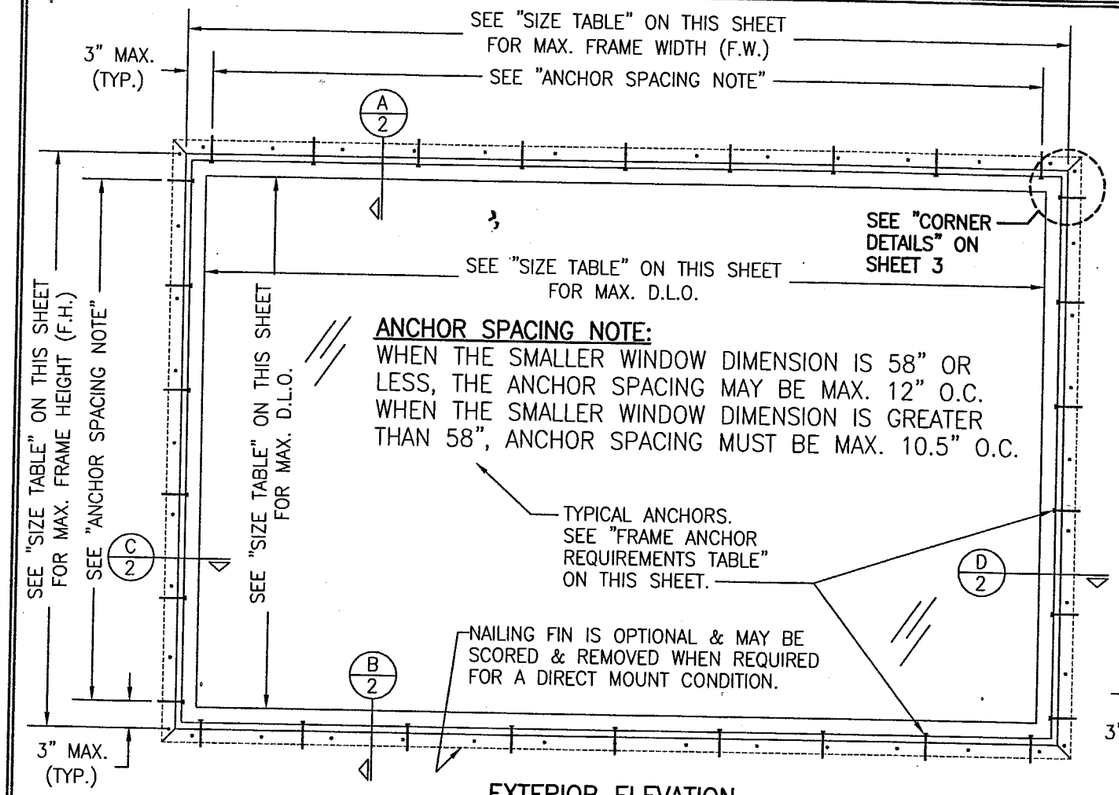

ANCHOR SPACING NOTE:
WHEN THE SMALLER WINDOW DIMENSION IS 58" OR LESS, THE ANCHOR SPACING MAY BE MAX. 12" O.C. WHEN THE SMALLER WINDOW DIMENSION IS GREATER THAN 58", ANCHOR SPACING MUST BE MAX. 10.5" O.C.

EXTERIOR ELEVATION
SINGLE FIXED CASEMENT

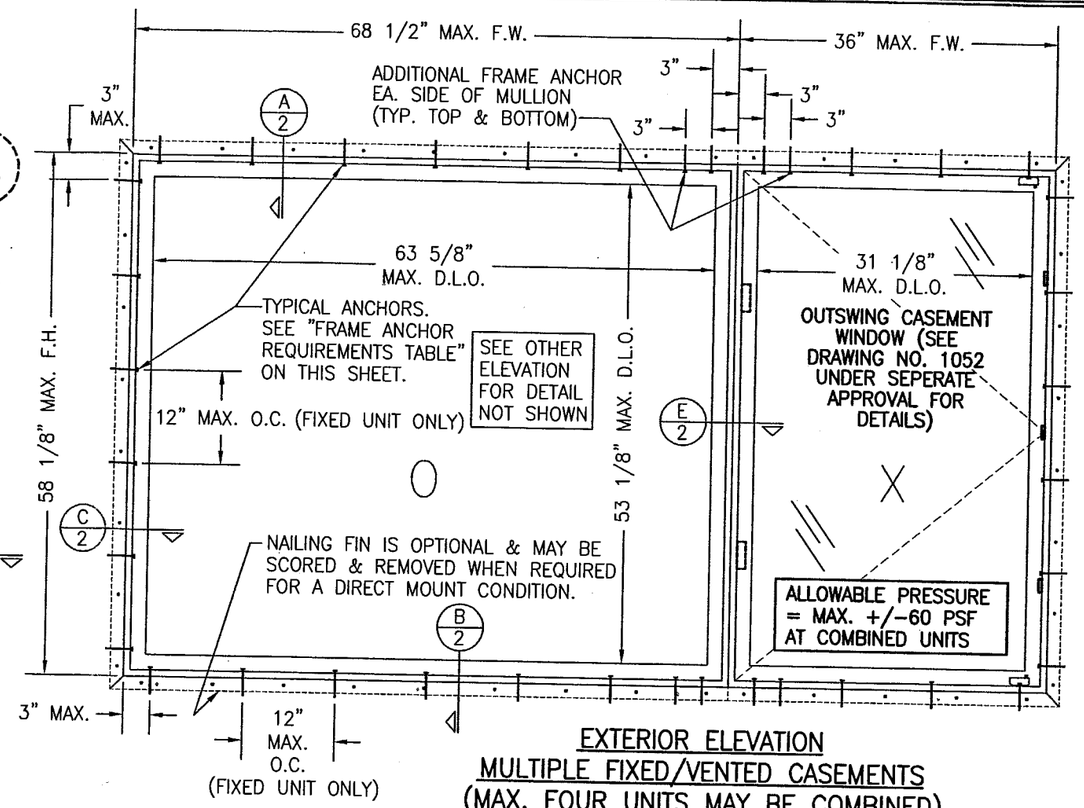

EXTERIOR ELEVATION
MULTIPLE FIXED/VENTED CASEMENTS
(MAX. FOUR UNITS MAY BE COMBINED)

ALLOWABLE WINDOW SIZE TABLE			
HEIGHT	WIDTH	D.L.O. (IN.)	
(IN.)	(IN.)	HEIGHT	WIDTH
48 1/8	124	43 1/8	119 1/8
52 1/8	120	47 1/8	115 1/8
58 1/8	108	53 1/8	103 1/8
64	100	59	95 1/8
72	88	67	83 1/8
APPLICABLE FOR SNGLE WINDOWS ONLY.			

NOTES:
1. HEIGHT (F.H.) & WIDTH (F.W.) ARE INTERCHANGABLE.
2. ALL HEIGHT & WIDTH DIMENSIONS ARE +/-1/2"

FOR ALLOWABLE DESIGN WIND PRESSURE ON SINGLE WINDOWS, SEE LOAD TABLES ON SHEET 4.

IMPACT RESISTANT WINDOWS SHUTTERS NOT REQUIRED

MULTIPLE UNIT NOTES:
1. OPERABLE WNDOWS ARE RESTRICTED TO THE MAXIMUM F.H. & F.W. SHOWN.
2. FIXED WINDOWS ARE RESTRICTED TO THE F.H. & F.W. SHOWN AS MAXIMUM.
3. WHEN BOTH WINDOWS ARE TO BE WIDER THAN 36" (F.W.), BOTH WINDOWS SHALL BE RESTRICTED BY A MAXIMUM F.W. OF 48".
4. WHEN EITHER WINDOW IS TO BE 36" F.W. OR LESS, THE OTHER WINDOW (IF IT IS A FIXED WINDOW) MAY BE UP TO 68 1/2" F.W.
5. COMBINED UNITS ARE APPLICABLE TO BOTH A FIXED MULLED TO A FIXED AND AN OPERABLE MULLED TO A FIXED. FOR OPERABLE MULLED TO AN OPERABLE, SEE "OUTSWING CASEMENT WINDOW" DRAWING NO. 1052 UNDER SEPARATE APPROVAL.
6. THE MAXIMUM ALLOWABLE PRESSURE FOR A COMBINED UNIT IS RESTRICTED BY THE LESSER OF THE INDIVIDUAL WINDOW ALLOWABLE PRESSURE OR +/-60 PSF UNLESS A CLIPPED MULLION IS USED PER WEATHER SHIELD'S MULLION APPROVAL.
7. FOR CLIPPED MULLION COMBINATIONS, SEE DRAWINGS NO. M96-05 & M96-06 UNDER SEPERATE APPROVAL.

NOTES
1. THIS STRUCTURE IS DESIGNED AS PER THE FLORIDA BUILDING CODE (FBC).
2. WOOD BUCKS BY OTHERS, MUST BE ANCHORED PROPERLY TO TRANSFER LOADS TO THE STRUCTURE.
3. ANCHORS SHALL BE AS LISTED, SPACED AS SHOWN ON DETAILS. ANCHOR EMBEDMENT TO BASE MATERIAL SHALL BE BEYOND WALL DRESSING OR STUCCO.
4. ANCHORING OR LOADING CONDITION NOT SHOWN IN THESE DETAILS ARE NOT PART OF THIS APPROVAL.

FRAME ANCHOR REQUIREMENTS TABLE			
OPENING TYPE (SUBSTRATE)	JAMB TO OPENING FASTENER TYPE	MINIMUM EMBEDMENT	MINIMUM EDGE DIST.
2X_ WOOD FRAME OR BUCK	NO. 10 SMS SCREW	1 3/8"	1"
CMU/CONCRETE	3/16" TAPCON	1 1/4"	2"

ANCHOR NOTE: FRAME MAY BE EITHER DIRECT MOUNTED TO THE OPENING, MOUNTED ONTO A 1X4 P.T. CONTINUOUS SPACER, OR ANCHORED TO A MIN. 2X4 NO. 2 SOUTHERN PINE WOOD BUCK. WHEN ANCHORED TO A 2X4 BUCK, NO. 10 SCREWS SHALL BE USED. WHEN DIRECT MOUNTED OR MOUNTED WITH SPACER, 3/16" TAPCONS SHALL BE USED. SEE "ANCHOR REQUIREMENTS TABLE" FOR EMBED REQUIREMENTS. PROPER MATERIAL SHALL BE USED BETWEEN ALL DISIMILAR MATERIALS (BLOCK/CONCRETE & ALUMINUM).

PRODUCT REVISED
as complying with the Florida Building Code
Acceptance No. 05-0811.03
Expiration Date 04/15/07
By
Miami Dade Product Control Division

DRAWN BY: S.T.R.	CHECKED BY: W.W.S.
PLOT: 1=16	DATE: 1/25/05

NO.	REVISION DESCRIPTION	BY	DATE

DRAWING TITLE
PEACHTREE IMPACT ALUMINUM CLAD CASEMENT FIXED PICTURE

MANUFACTURER
PEACHTREE DOORS & WINDOWS
2744 RAMSEY ROAD
GAINESVILLE, GA 30501
770-534-8070

CONSULTANTS
W. W. SCHAEFER ENGINEERING & CONSULTING, P.A.
600 SANDTREE DRIVE; SUITE 203B
PALM BEACH GARDENS, FL 33403
PHONE: 561-775-4902 FAX: 561-775-4903

CERTIFICATION
JAN 25 2005
WARREN W. SCHAEFER, P.E.
P.E. NO. 44135

DRAWING NO. 1384
REV.
SHEET NO. 1 OF 4

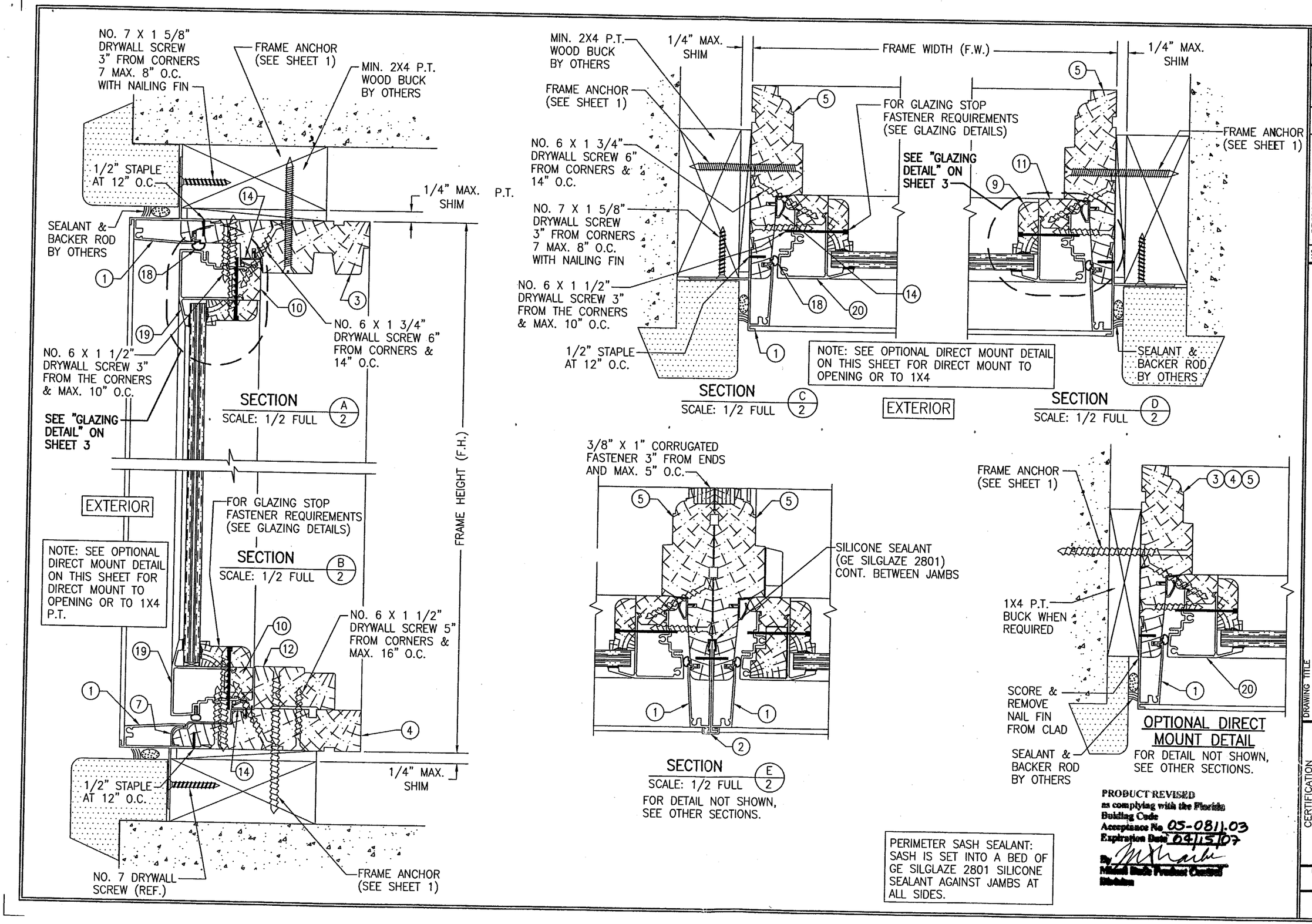

PRODUCT REVISED
as complying with the Florida Building Code
Acceptance No. 05-0811.03
Expiration Date 04/15/07
By [signature]
Miami Dade Product Control Division

DRAWN BY: S.T.R.	CHECKED BY: W.W.S.
PLOT: 1=2	DATE: 1/25/05

NO.	REVISION DESCRIPTION	BY	DATE

DRAWING TITLE
PEACHTREE IMPACT ALUMINUM CLAD CASEMENT FIXED PICTURE

MANUFACTURER
PEACHTREE DOORS & WINDOWS
2744 RAMSEY ROAD
GAINESVILLE, GA 30501
770-534-8070

CONSULTANTS
W. W. SCHAEFER ENGINEERING & CONSULTING, P.A.
600 SANDTREE DRIVE; SUITE 203B
PALM BEACH GARDENS, FL 33403
PHONE: 561-775-4902 FAX: 561-775-4903

CERTIFICATION
JAN 25 2005
WARREN W. SCHAEFER, P.E.
P.E. NO. 44135

DRAWING NO. 1384
REV.
SHEET NO. 2 OF 4

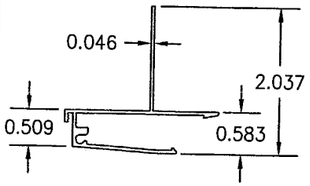

① JAMB CLAD

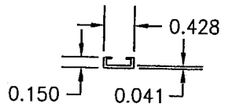

② MULLION CLIP

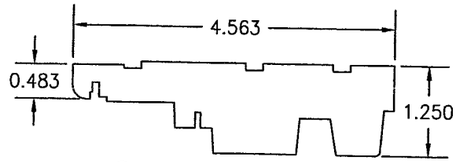

③ FRAME HEAD JAMB

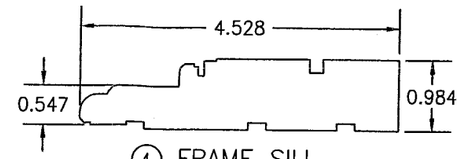

④ FRAME SILL

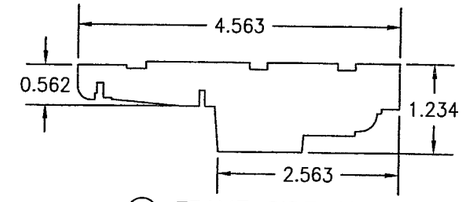

⑤ FRAME SIDE JAMB

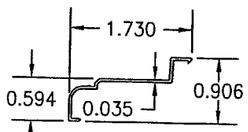

⑦ SILL CLAD

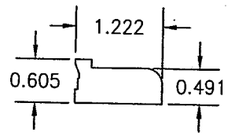

⑨ GLASS STOP

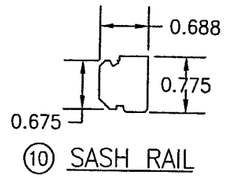

⑩ SASH RAIL

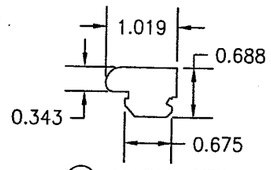

⑪ SASH STILE

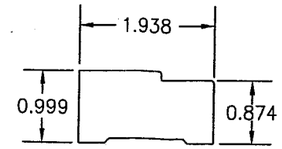

⑫ STATIONARY OPERATOR COVER

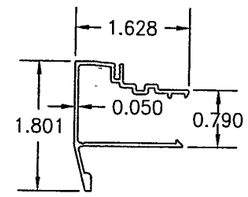

⑲ SASH RAIL COVER

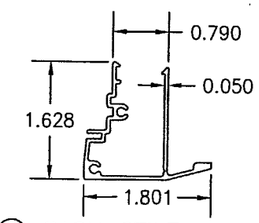

⑳ SASH STILE COVER

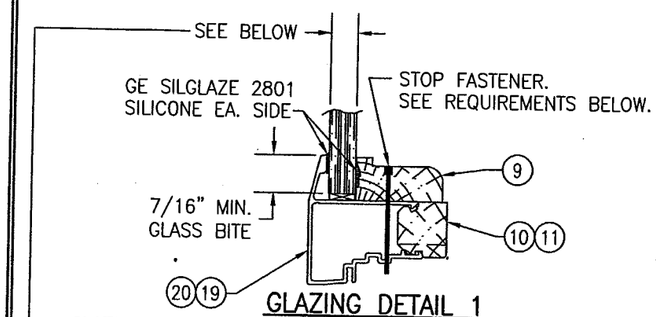

GLAZING DETAIL 1

GLAZING OPTIONS (TYP. FOR DETAIL 1):
GLAZING OPTION 1) 1/2" THK. GLOBE AMERADA P380 (3/16" CHEM TEM/0.035 URETHANE/ 1/16" POLY CARBONATE/0.035 URETHANE/3/16" CHEM TEM)

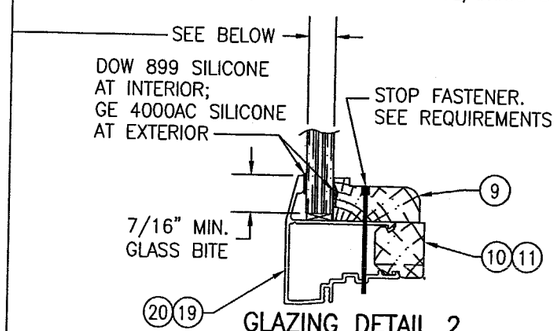

GLAZING DETAIL 2

GLAZING OPTIONS (TYP. FOR DETAIL 2):
- GLAZING OPTION 2) 1/2" THK. GLOBE AMERADA P380 (3/16" CHEM TEM/0.035 URETHANE/ 1/16" POLY CARBONATE/0.035 URETHANE/3/16" CHEM TEM)
- GLAZING OPTION 3) 5/8" THK. VARACON HRG2 (1/4" H.S./0.05 URETHANE/0.08 POLYCARBONATE SHEET/0.05 URETHANE/1/4" H.S.)
- GLAZING OPTION 4) 9/16" THK. SOLUTIA SAFLEX (1/4" H.S./0.09 SOLUTIA SAFLEX PVB/1/4" H.S.)

GLAZING STOP FASTENER REQUIREMENTS:
FRAME SHORT SIDES: NO. 8 X 1" DRYWALL SCREWS OR F16 X 1 1/2" BRAD NAILS 3" FROM CORNERS & MAX. 8" O.C.
FRAME LONG SIDES: NO. 8 X 1" DRYWALL SCREWS OR F16 X 1 1/2" BRAD NAILS 3" FROM CORNERS & MAX. 8" O.C. IN ADDITION PLACE NO. 8 X 2 1/2" DECK SCREWS AT CENTER SPAN OF SASH & AT EACH 12" AND 24" OFF CENTER SPAN (MAX. 5 SCREWS REQUIRED ON ANY ONE SASH) WHERE WINDOW SASH SPAN ALLOWS.

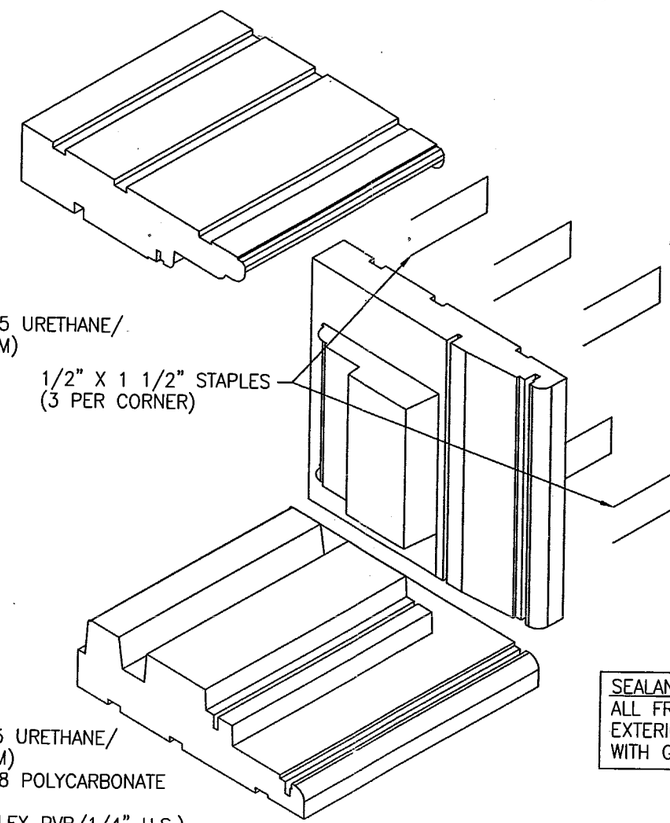

FRAME CORNER DETAIL

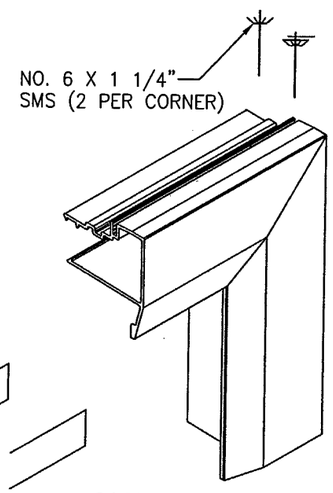

SASH CORNER DETAIL

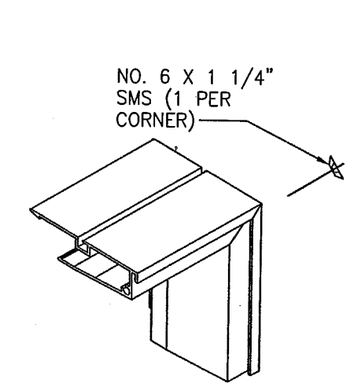

JAMB CLAD CORNER DETAIL

SEALANT:
ALL FRAME CORNERS, JOINTS & EXTERIOR MULL CLIP SEALED WITH GE SILGLAZE 2801

PRODUCT REVISED
as complying with the Florida Building Code
Acceptance No. 05-0811.03
Expiration Date 04/15/07
By
Miami Dade Product Control Division

NO.	REVISION DESCRIPTION	BY	DATE

DRAWN BY: S.T.R.
CHECKED BY: W.W.S.
PLOT: 1=2
DATE: 1/25/05

DRAWING TITLE
PEACHTREE IMPACT ALUMINUM CLAD CASEMENT FIXED PICTURE

MANUFACTURER
PEACHTREE DOORS & WINDOWS
2744 RAMSEY ROAD
GAINESVILLE, GA 30501
770-534-8070

CONSULTANTS
W. W. SCHAEFER ENGINEERING & CONSULTING, P.A.
600 SANDTREE DRIVE; SUITE 203B
PALM BEACH GARDENS, FL 33403
PHONE: 561-775-4902 FAX: 561-775-4903

CERTIFICATION
JAN 25 2005
WARREN W. SCHAEFER, P.E.
P.E. NO. 44135

DRAWING NO. 1384
REV.
SHEET NO. 3 OF 4

9/16" SOLUTIA SAFLEX LAMINATED HEAT STRENGTHENED GLASS (WITH GLAZING DETAIL 2 & GLAZING OPTION 4)

(1) SHORT DIMENSION	DESIGN LOAD CAPACITY (PSF)															
	POS.	NEG	POS.	NEG	POS.	NEG	POS.	NEG	POS.	NEG	POS.	NEG	POS.	NEG	POS.	NEG
32"	55.0	67.0	55.0	67.0	55.0	67.0	55.0	67.0	55.0	67.0	55.0	67.0	55.0	67.0	55.0	67.0
36"	55.0	67.0	55.0	67.0	55.0	67.0	55.0	67.0	55.0	67.0	55.0	67.0	55.0	67.0	55.0	67.0
40"	55.0	67.0	55.0	67.0	55.0	67.0	55.0	67.0	55.0	67.0	55.0	67.0	55.0	67.0	55.0	67.0
44"	55.0	67.0	55.0	67.0	55.0	67.0	55.0	67.0	55.0	67.0	55.0	67.0	55.0	67.0	55.0	67.0
48"	55.0	67.0	55.0	67.0	55.0	67.0	55.0	67.0	55.0	67.0	55.0	67.0	55.0	67.0	55.0	67.0
52"	55.0	67.0	55.0	67.0	55.0	67.0	55.0	67.0	55.0	67.0	55.0	67.0	55.0	67.0	55.0	67.0
56"	55.0	67.0	55.0	67.0	55.0	67.0	55.0	67.0	55.0	67.0	55.0	67.0	55.0	67.0	0	0
60"	55.0	67.0	55.0	67.0	55.0	67.0	55.0	67.0	55.0	67.0	55.0	67.0	0	0	0	0
64"	55.0	67.0	55.0	67.0	55.0	67.0	55.0	67.0	55.0	67.0	0	0	0	0	0	0
72"	48.9	59.6	48.9	59.6	48.9	59.6	0	0	0	0	0	0	0	0	0	0
(1) LONG DIMENSION	72"		76"		84"		96"		100"		108"		120"		124"	

1/2" GLOBE P-380 LAMINATED CHEM TEM GLASS (WITH GLAZING DETAIL 2 & GLAZING OPTION 2)

(1) SHORT DIMENSION	DESIGN LOAD CAPACITY (PSF)															
	POS.	NEG	POS.	NEG	POS.	NEG	POS.	NEG	POS.	NEG	POS.	NEG	POS.	NEG	POS.	NEG
32"	60.0	75.0	60.0	75.0	60.0	75.0	60.0	75.0	60.0	75.0	60.0	75.0	60.0	75.0	60.0	75.0
36"	60.0	75.0	60.0	75.0	60.0	75.0	60.0	75.0	60.0	75.0	60.0	75.0	60.0	75.0	60.0	75.0
40"	60.0	75.0	60.0	75.0	60.0	75.0	60.0	75.0	60.0	75.0	60.0	75.0	60.0	75.0	60.0	75.0
44"	60.0	75.0	60.0	75.0	60.0	75.0	60.0	75.0	60.0	75.0	60.0	75.0	60.0	75.0	60.0	75.0
48"	60.0	75.0	60.0	75.0	60.0	75.0	60.0	75.0	60.0	75.0	60.0	75.0	60.0	73.0	60.0	70.9
52"	60.0	75.0	60.0	75.0	60.0	75.0	60.0	74.3	60.0	71.8	60.0	67.0	60.0	62.2	0	0
56"	60.0	75.0	60.0	75.0	60.0	75.0	60.0	68.2	60.0	65.3	60.0	60.3	0	0	0	0
60"	60.0	75.0	60.0	75.0	60.0	74.1	60.0	63.7	60.0	60.9	0	0	0	0	0	0
64"	60.0	75.0	60.0	75.0	60.0	70.7	60.0	60.6	58.1	58.1	0	0	0	0	0	0
72"	53.3	66.7	53.3	66.7	53.3	62.7	0	0	0	0	0	0	0	0	0	0
(1) LONG DIMENSION	72"		76"		84"		96"		100"		108"		120"		124"	

5/8" VIRACON HRG2 LAMINATED HEAT STRENGTHENED GLASS (WITH GLAZING DETAIL 2 & GLAZING OPTION 3)

(1) SHORT DIMENSION	DESIGN LOAD CAPACITY (PSF)															
	POS.	NEG	POS.	NEG	POS.	NEG	POS.	NEG	POS.	NEG	POS.	NEG	POS.	NEG	POS.	NEG
32"	60.0	75.0	60.0	75.0	60.0	75.0	60.0	75.0	60.0	75.0	60.0	75.0	60.0	75.0	60.0	75.0
36"	60.0	75.0	60.0	75.0	60.0	75.0	60.0	75.0	60.0	75.0	60.0	75.0	60.0	75.0	60.0	75.0
40"	60.0	75.0	60.0	75.0	60.0	75.0	60.0	75.0	60.0	75.0	60.0	75.0	60.0	75.0	60.0	75.0
44"	60.0	75.0	60.0	75.0	60.0	75.0	60.0	75.0	60.0	75.0	60.0	75.0	60.0	75.0	60.0	75.0
48"	60.0	75.0	60.0	75.0	60.0	75.0	60.0	75.0	60.0	75.0	60.0	75.0	60.0	75.0	60.0	75.0
52"	60.0	75.0	60.0	75.0	60.0	75.0	60.0	75.0	60.0	75.0	60.0	75.0	60.0	75.0	60.0	75.0
56"	60.0	75.0	60.0	75.0	60.0	75.0	60.0	75.0	60.0	75.0	60.0	75.0	60.0	75.0	0	0
60"	60.0	75.0	60.0	75.0	60.0	75.0	60.0	75.0	60.0	75.0	60.0	75.0	0	0	0	0
64"	60.0	75.0	60.0	75.0	60.0	75.0	60.0	75.0	60.0	75.0	0	0	0	0	0	0
72"	53.3	66.7	53.3	66.7	53.3	66.7	0	0	0	0	0	0	0	0	0	0
(1) LONG DIMENSION	72"		76"		84"		96"		100"		108"		120"		124"	

ITEM #	PART #	REQD.	DESCRIPTION	MATERIAL	MANF./REMARKS
1	900508	4	HEAD, SILL & SIDE JAMB CLAD (TFT)	6063-T5 ALUMINUM	CAPITOL
2	780959	1	CONTINUOUS MULLION CLIP	6063-T5 ALUMINUM	CAPITOL
3	310003	1	HEAD JAMB	* WOOD	WEATHER SHIELD
4	310004	1	SILL	* WOOD	WEATHERSHIELD
5	310021	2	SIDE JAMBS	* WOOD	WEATHER SHIELD
7	969911	1	SILL CLAD	6063-T5 ALUMINUM	CAPITOL
9	–	4/SASH	GLASS STOP	* WOOD	WEATHER SHIELD
10	–	2	SASH RAIL	* WOOD	WEATHER SHIELD
11	–	2	SASH STILE	* WOOD	WEATHER SHIELD
12	90029W	1	STATIONARY OPERATOR COVER	* WOOD	WEATHER SHIELD
14	7600611	4	WEATHER STRIP	–	AMESBURY
18	760013	3	HEAD & SIDE JAMB WEATHER STRIP	VINYL	WEATHER SHIELD
19	969378	2	SASH RAIL COVER	6063-T5 ALUMINUM	CAPITOL
20	969381	2	SASH STILE COVER	6063-T5 ALUMINUM	CAPITOL

* WOOD USED WITH TEST UNITS WAS PONDEROSA PINE. ALTERNATE WOOD SPECIES TO BE APPLICABLE WITH THESE WINDOWS IS MIN. GRADE 2 MAHOGANY, SOUTHERN PINE, OAK, CHERRY, MAPLE, DOUGLAS FIR & CYPRUS.

1/2" GLOBE P-380 LAMINATED CHEM TEM GLASS (WITH GLAZING DETAIL 1 & GLAZING OPTION 1)

(1) SHORT DIMENSION	DESIGN LOAD CAPACITY (PSF)																					
	POS.	NEG	POS.	NEG	POS.	NEG	POS.	NEG	POS.	NEG	POS.	NEG	POS.	NEG	POS.	NEG	POS.	NEG	POS.	NEG	POS.	NEG
32"	75.0	75.0	75.0	75.0	75.0	75.0	75.0	75.0	75.0	75.0	75.0	75.0	75.0	75.0	75.0	75.0	75.0	75.0	75.0	75.0	70.0	70.0
36"	75.0	75.0	75.0	75.0	75.0	75.0	75.0	75.0	75.0	75.0	75.0	75.0	75.0	75.0	75.0	75.0	75.0	75.0	75.0	75.0	70.0	70.0
40"	75.0	75.0	75.0	75.0	75.0	75.0	75.0	75.0	75.0	75.0	75.0	75.0	75.0	75.0	75.0	75.0	75.0	75.0	70.0	70.0	70.0	70.0
44"	75.0	75.0	75.0	75.0	75.0	75.0	75.0	75.0	75.0	75.0	75.0	75.0	75.0	75.0	70.0	70.0	70.0	70.0	70.0	70.0	70.0	70.0
48"	75.0	75.0	75.0	75.0	75.0	75.0	75.0	75.0	75.0	75.0	75.0	75.0	70.0	70.0	70.0	70.0	70.0	70.0	70.0	70.0	70.0	70.0
52"	75.0	75.0	75.0	75.0	75.0	75.0	75.0	75.0	70.0	70.0	70.0	70.0	70.0	70.0	70.0	70.0	70.0	70.0	70.0	70.0	70.0	70.0
56"	75.0	75.0	75.0	75.0	75.0	75.0	70.0	70.0	70.0	70.0	70.0	70.0	70.0	70.0	70.0	70.0	67.0	67.0	62.2	62.2	0	0
60"	74.7	74.7	74.7	74.7	70.0	70.0	70.0	70.0	70.0	70.0	70.0	70.0	68.2	68.2	65.3	65.3	60.3	60.3	0	0	0	0
64"	–	–	70.0	70.0	70.0	70.0	70.0	70.0	70.0	70.0	70.0	70.0	63.7	63.7	60.9	60.9	0	0	0	0	0	0
72"	–	–	–	–	–	–	62.2	62.2	62.2	62.2	62.2	62.2	0	0	0	0	0	0	0	0	0	0
(1) LONG DIMENSION	60"		64"		68"		72"		76"		84"		96"		100"		108"		120"		124"	

TABLE NOTES:

(1) ALL WINDOW DIMENSION VALUES SHOWN ARE +/-1/2" & ARE FRAME (F.H. & F.W.) DIMENSIONS

PRODUCT REVIEWED
as complying with the Florida Building Code
Acceptance No. 05-0811.03
Expiration Date 04/15/07
By M Khan
Miami Dade Product Control Division

NO.	REVISION DESCRIPTION	BY	DATE

DRAWN BY: S.T.R. | CHECKED BY: W.W.S.
PLOT: 1=2 | DATE: 1/25/05

DRAWING TITLE
PEACHTREE IMPACT ALUMINUM CLAD CASEMENT FIXED PICTURE

MANUFACTURER
PEACHTREE DOORS & WINDOWS
2744 RAMSEY ROAD
GAINESVILLE, GA 30501
770-534-8070

CONSULTANTS
W. W. SCHAEFER ENGINEERING & CONSULTING, P.A.
600 SANDTREE DRIVE; SUITE 2038
PALM BEACH GARDENS, FL 33403
PHONE: 561-775-4902 FAX: 561-775-4903

CERTIFICATION
JAN 25 2005
WARREN W. SCHAEFER, P.E.
P.E. NO. 44135

DRAWING NO. 1384 | REV.

SHEET NO. 4 OF 4