MIAMI-DADE COUNTY

BUILDING CODE COMPLIANCE OFFICE (BCCO)
PRODUCT CONTROL DIVISION

MIAMI-DADE COUNTY, FLORIDA
METRO-DADE FLAGLER BUILDING
140 WEST FLAGLER STREET, SUITE 1603
MIAMI, FLORIDA 33130-1563
(305) 375-2901 FAX (305) 375-2908
www.buildingcodeonline.com

NOTICE OF ACCEPTANCE (NOA)

PGT Industries
1070 Technology Drive
Nokomis, FL 34275

SCOPE:
This NOA is being issued under the applicable rules and regulations governing the use of construction materials. The documentation submitted has been reviewed by Miami-Dade County Product Control Division and accepted by the Board of Rules and Appeals (BORA) to be used in Miami Dade County and other areas where allowed by the Authority Having Jurisdiction (AHJ).
This NOA shall not be valid after the expiration date stated below. The Miami-Dade County Product Control Division (In Miami Dade County) and/or the AHJ (in areas other than Miami Dade County) reserve the right to have this product or material tested for quality assurance purposes. If this product or material fails to perform in the accepted manner, the manufacturer will incur the expense of such testing and the AHJ may immediately revoke, modify, or suspend the use of such product or material within their jurisdiction. BORA reserves the right to revoke this acceptance, if it is determined by Miami-Dade County Product Control Division that this product or material fails to meet the requirements of the applicable building code.
This product is approved as described herein, and has been designed to comply with the Florida Building Code, including High Velocity Hurricane Zone of the Florida Building Code.

DESCRIPTION: Series SH-800 Aluminum Single Hung Window-S.M.I,

APPROVAL DOCUMENT: Drawing No. **4061**, titled "SH-800 Multi-Story Alum. Single Hung Window-S.M.", dated 10/04/01 with revision "**F**" on 07/20/05, sheets 1 through 8 of 8, prepared by manufacturer, signed and sealed by Robert L. Clark, P.E., bearing the Miami-Dade County Product Control Revision stamp with the Notice of Acceptance number and expiration date by the Miami-Dade County Product Control Division.

MISSILE IMPACT RATING: Small Missile Impact

LABELING: Each unit shall bear a permanent label with the manufacturer's name or logo, city, state and following statement: "Miami-Dade County Product Control Approved", unless otherwise noted herein.

RENEWAL of this NOA shall be considered after a renewal application has been filed and there has been no change in the applicable building code negatively affecting the performance of this product.

TERMINATION of this NOA will occur after the expiration date or if there has been a revision or change in the materials, use, and/or manufacture of the product or process. Misuse of this NOA as an endorsement of any product, for sales, advertising or any other purposes shall automatically terminate this NOA. Failure to comply with any section of this NOA shall be cause for termination and removal of NOA.

ADVERTISEMENT: The NOA number preceded by the words Miami-Dade County, Florida, and followed by the expiration date may be displayed in advertising literature. If any portion of the NOA is displayed, then it shall be done in its entirety.

INSPECTION: A copy of this entire NOA shall be provided to the user by the manufacturer or its distributors and shall be available for inspection at the job site at the request of the Building Official.
This NOA **revises NOA # 05-0204.03** and, consists of this page 1 and evidence pages E-1, and E-2, as well as approval document mentioned above.
The submitted documentation was reviewed by **Herminio F. Gonzalez, P.E., Director, BCCO**

PRODUCT CONTROL ACCEPTED
10/12/05

PGT Industries

NOTICE OF ACCEPTANCE: EVIDENCE SUBMITTED

A. DRAWINGS

1. Manufacturer's die drawings and sections.
2. Drawing No **4061**, Sheets 1 through 8 of 8, titled "Multi-Story Alum. Single Hung Window", prepared by manufacturer, dated 10/4/01 with revision **"F"** dated 07/20/05, signed and sealed by Robert L. Clark, P.E.

B. TESTS

1. Test reports on 1) Air Infiltration Test, per FBC, TAS 202-94
   2) Uniform Static Air Pressure Test, Loading per FBC TAS 202-94
   3) Water Resistance Test, per FBC, TAS 202-94
   4) Small Missile Impact Test per FBC, TAS 201-94
   5) Cyclic Wind Pressure Loading per FBC, TAS 203-94
   6) Forced Entry Test, per FBC 3603.2 (b) and TAS 202-94

   along with marked-up drawings and installation diagram of Series SH-800 Aluminum Single Hung Proview Window, prepared by Fenestration Testing Laboratory, Test Report No. **FTL-4006**, dated 01/16/04, signed and sealed by Eduardo Largaespada, P.E.

   "Submitted under NOA# 05-0204.03"
2. Test reports on 1) Air Infiltration Test, per FBC, TAS 202-94
   2) Uniform Static Air Pressure Test, Loading per FBC TAS 202-94
   3) Water Resistance Test, per FBC, TAS 202-94
   4) Small Missile Impact Test per FBC, TAS 201-94
   5) Cyclic Wind Pressure Loading per FBC, TAS 203-94
   6) Forced Entry Test, per FBC 3603.2 (b) and TAS 202-94

   along with marked-up drawings and installation diagram of a series SH-800 aluminum single hung window, prepared by Fenestration Testing Laboratory, Inc., Test Report No. **FTL-3179**, dated September 24, 2001, signed and sealed by Luis A. Figueredo, P.E.

   "Submitted under NOA# 05-0204.03"
3. Test reports on 1) Air Infiltration Test, per FBC, TAS 202-94
   2) Uniform Static Air Pressure Test, Loading per FBC, TAS 202-94
   3) Water Resistance Test, per FBC, TAS 202-94
   4) Small Missile Impact Test per FBC, TAS 201-94
   5) Cyclic Wind Pressure Loading per FBC, TAS 203-94
   6) Forced Entry Test, per FBC 2411 3.2.1 (b) and TAS 202-94

   along with marked-up drawings and installation diagram of a series SH-800 aluminum single hung window, prepared by Fenestration Testing Laboratory, Inc., Test Report No. **FTL-4380**, dated 11/04/04, signed and sealed by Edmundo Largaespada, P.E.

   "Submitted under NOA# 05-0204.03"

for M Hall

Herminio F. Gonzalez, P.E.
Director, Building Code Compliance Office
NOA No 05-0812.02
Expiration Date: July 03, 2007
Approval Date: November 03, 2005

NOTICE OF ACCEPTANCE: EVIDENCE SUBMITTED

C. CALCULATIONS

1. Revised Anchor Calculation and structural analysis, prepared by manufacture, dated 07/20/05, signed and sealed by Robert L. Clark, P.E.
2. Anchor Calculations, ASTM-E 1300, and structural analysis, prepared by Structural Design, Inc., dated 06/03/05, signed and sealed by Farrokh Rasekhi, P.E.
   Complies with ASTM E1300-98
   No 1/3 stress increase used in anchors into masonry or steel substrate.

D. QUALITY ASSURANCE

1. Miami Dade Building Code Compliance Office (BCCO).

E. MATERIAL CERTIFICATIONS

1. Notice of Acceptance No. **00-1212.04** issued to E.I. DuPont DeNemours for "**DuPont Butacite® PVB"** dated 02/15/01, expiring on 12/11/05.
2. Notice of Acceptance No. **01-0205.02** issued to Solutia Inc. for their "**Saflex /Keepsafe Maximum**" dated 05/17/01, expiring on 05/21/06.

F. STATEMENTS

1. Statement letter of conformance, dated 08/10/05, signed and sealed by Robert L. Clark, P.E.
2. Statement letter of no financial interest, dated 08/10/05, signed and sealed by Robert L. Clark, P.E.
3. Laboratory compliance letter for Test Report no. FTL- 4006, issued by Fenestration Test Laboratory, Inc., dated March 22, 2004, signed and sealed by Edmundo Largaespada, P.E.
   "Submitted under NOA# 05-0204.03"

G. OTHER

1. Notice of Acceptance No. **05-0204.03**, issued to PGT Industries for their Series "SH-800" Aluminum Single Hung Window, approved on 04/28/05 and expiring on 07/03/07.
2. Letter from the consultant, dated September 26, 2005, stating that the product is in compliance with the Florida Building Code (FBC).

for M. Thank

Herminio F. Gonzalez, P.E.
Director, Building Code Compliance Office
NOA No 05-0812.02
Expiration Date: July 03, 2007
Approval Date: November 03, 2005

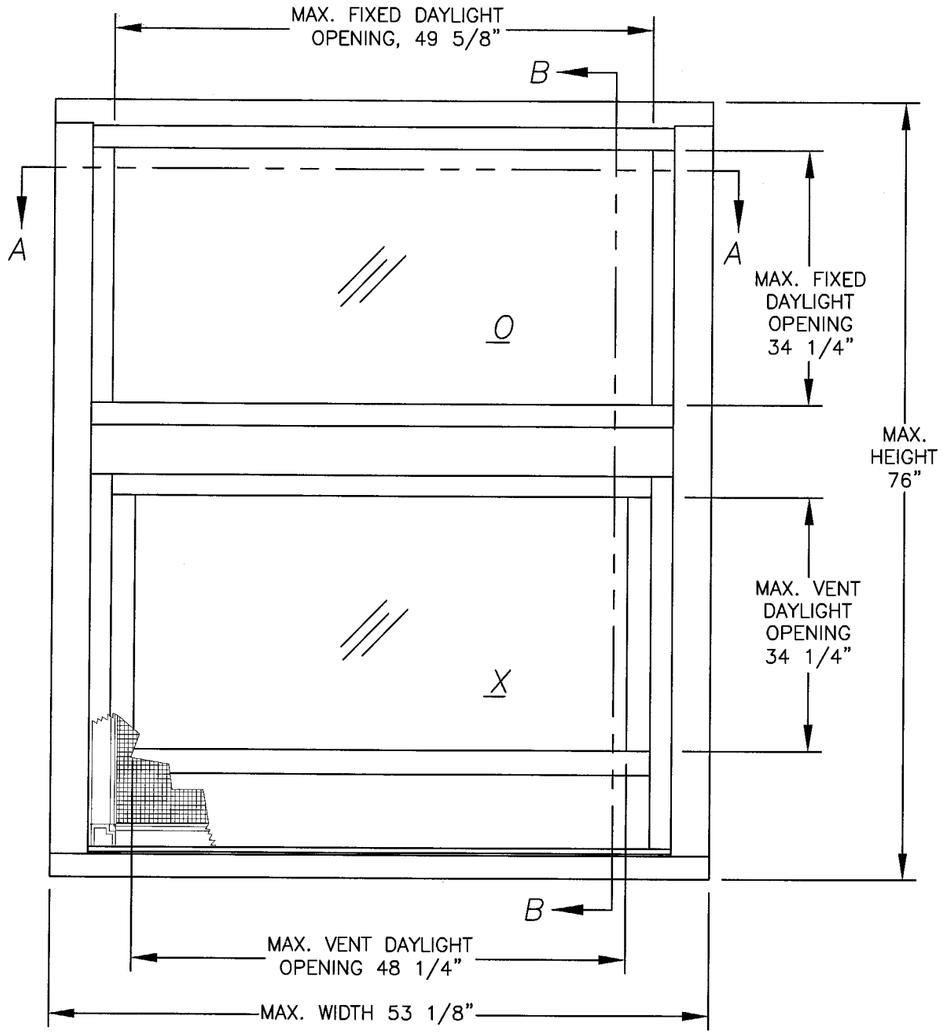

1/1 ELEVATION

SMALL MISSILE IMPACT SINGLE HUNG WINDOW

1. GLAZING OPTIONS: A. 7/16" LAMINATED GLASS CONSISTING OF (2) LITES OF 3/16" HEAT STRENGTHENED GLASS WITH AN .090 PVB INTERLAYER (DUPONT BUTACITE OR SAFLEX/KEEPSAFE MAXIMUM).
   B. 3/8" LAMINATED GLASS CONSISTING OF (1) LITE OF 1/8" ANNEALED GLASS OUTSIDE, AN .090 PVB INTERLAYER (DUPONT BUTACITE OR SAFLEX/KEEPSAFE MAXIMUM) AND (1) LITE OF 3/16" TEMPERED GLASS INSIDE.
2. DESIGN PRESSURE RATING: SEE TABLE 1
   A. NEGATIVE DESIGN LOADS BASED ON TESTED PRESSURE AND GLASS TABLES ASTM E 1300-98.
   B. POSITIVE DESIGN LOADS BASED ON WATER TEST PRESSURE AND GLASS TABLES ASTM E 1300-98.
3. △F ANCHORAGE: THE 33 1/3% STRESS INCREASE HAS NOT BEEN USED IN THE DESIGN OF THIS PRODUCT. FOR ANCHORAGE DETAILS SEE SHEETS 7 AND 8.
4. SHUTTER REQUIREMENT: MIAMI-DADE COUNTY APPROVED SHUTTERS ARE REQUIRED AT INSTALLATIONS BELOW 30 FEET. (NON REQ'D AT INSTALLATIONS ABOVE 30 FT. GRADE)
5. NARROW JOINT SEALANT IS USED ON ALL 4 CORNERS OF THE FRAME, MEETING RAIL & ASSEMBLY SCREWS.
6. REFERENCE TEST REPORTS: FTL-3179, FTL-4006 & FTL-4380

NOA DRAWING MAP

TOPIC	SHEET
GENERAL NOTES	1
ELEVATIONS	1-2
GLAZING DETAILS	1
DESIGN PRESSURES	1
VERT. SECTIONS	3-4
HORIZ. SECTIONS	3
PARTS LIST	6
EXTRUSIONS	5-6
ANCHORAGE	7-8

PRODUCT REVIEWED as complying with the Florida Building Code
Acceptance No. 05-0812.02
Expiration Date 07/03/07
By [signature]
Miami Dade Product Control Division

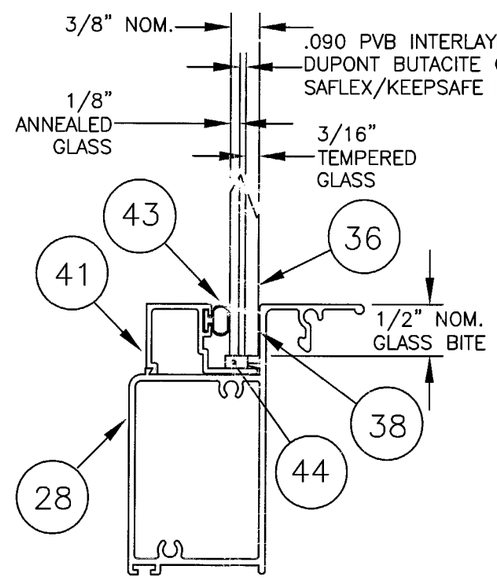

B – 3/8" LAMINATED

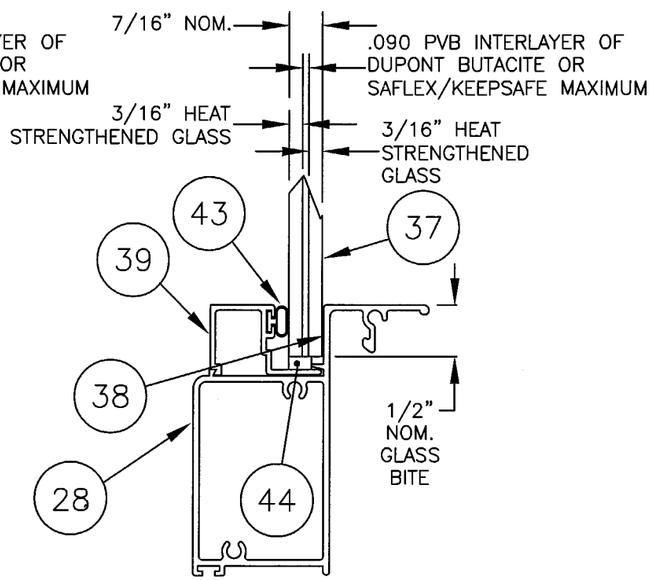

A – 7/16" LAMINATED

GLAZING OPTIONS

△F

TABLE 1. DESIGN PRESSURES		
GLASS TYPE A	+90.0	-142.8
GLASS TYPE B	+90.0	-150.0
5/16" TAPCON ANCHORS. SEE SHT. 7 FOR SPACING		
SEE SHT. 7 FOR DP LIMITATIONS WHEN ANCHORING WITH OTHER TYPE ANCHORS.		

Robert L. Clark, P.E.
PE #39712
Structural

PGT INDUSTRIES

1070 TECHNOLOGY DRIVE
NOKOMIS, FL 34275

P.O. BOX 1529
NOKOMIS, FL 34274

Revsd By:	Date:	Revisions:
F.K.	7/20/05	F-REVISE ANCHORAGE/FBC
F.K.	1/10/05	E-REVISE DPS/ANCHORS SHT 7
F.K.	8/30/04	D-UPDATES AS NOTED
Drawn By: F.K.	Date: 10/4/01	

Description: ELEVATION & GLAZING DETAILS (SM MISSILE)

Title: MULTI-STORY ALUM. SINGLE HUNG WINDOW

Series/Model:	Scale:	Sheet:	Drawing No.	Rev:
SH-800	NTS	1 of 8	4061	F

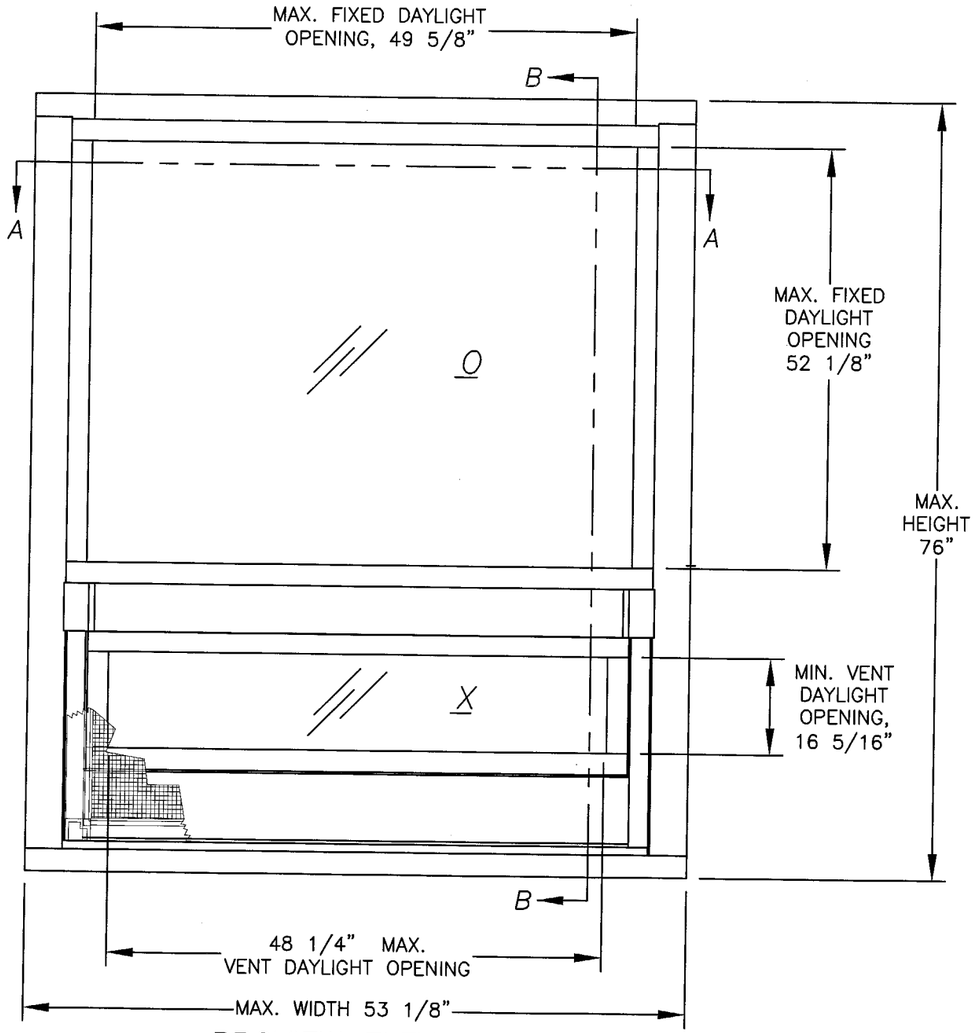

PROVIEW ELEVATION

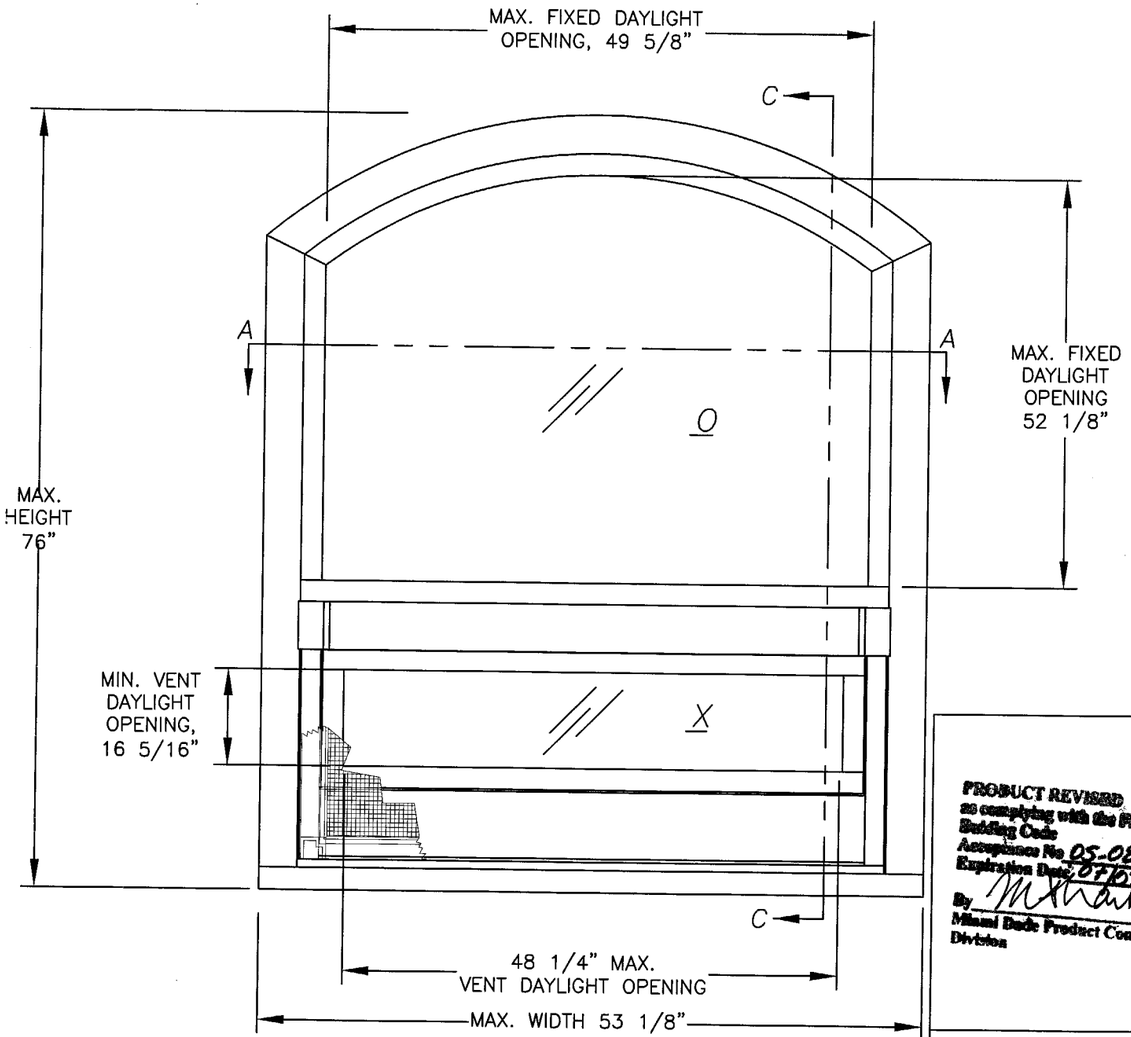

RADIUS TOP ELEVATION

PRODUCT REVISED
as complying with the Florida Building Code
Acceptance No. 05-0812.02
Expiration Date: 07/03/07
By: M Khan
Miami Dade Product Control Division

Revsd By:	Date:	Revisions:
F.K.	7/20/05	F–NO CHG THIS SHT
F.K.	1/10/05	E–MOVE ANCH. & DP TAB.
F.K.	8/30/04	D–UPDATES AS NOTED
Drawn By: F.K.	Date: 12/01/03	

Robert L. Clark, P.E.
PE #39712
Structural

PGT INDUSTRIES

1070 TECHNOLOGY DRIVE
NOKOMIS, FL 34275

P.O. BOX 1529
NOKOMIS, FL 34274

Description: ELEVATIONS, PROVIEW & RADIUS TOP (SM MISSILE)

Title: MULTI–STORY ALUM. SINGLE HUNG WINDOW

Series/Model:	Scale:	Sheet:	Drawing No.	Rev:
SH–800	NTS	2 of 8	4061	F

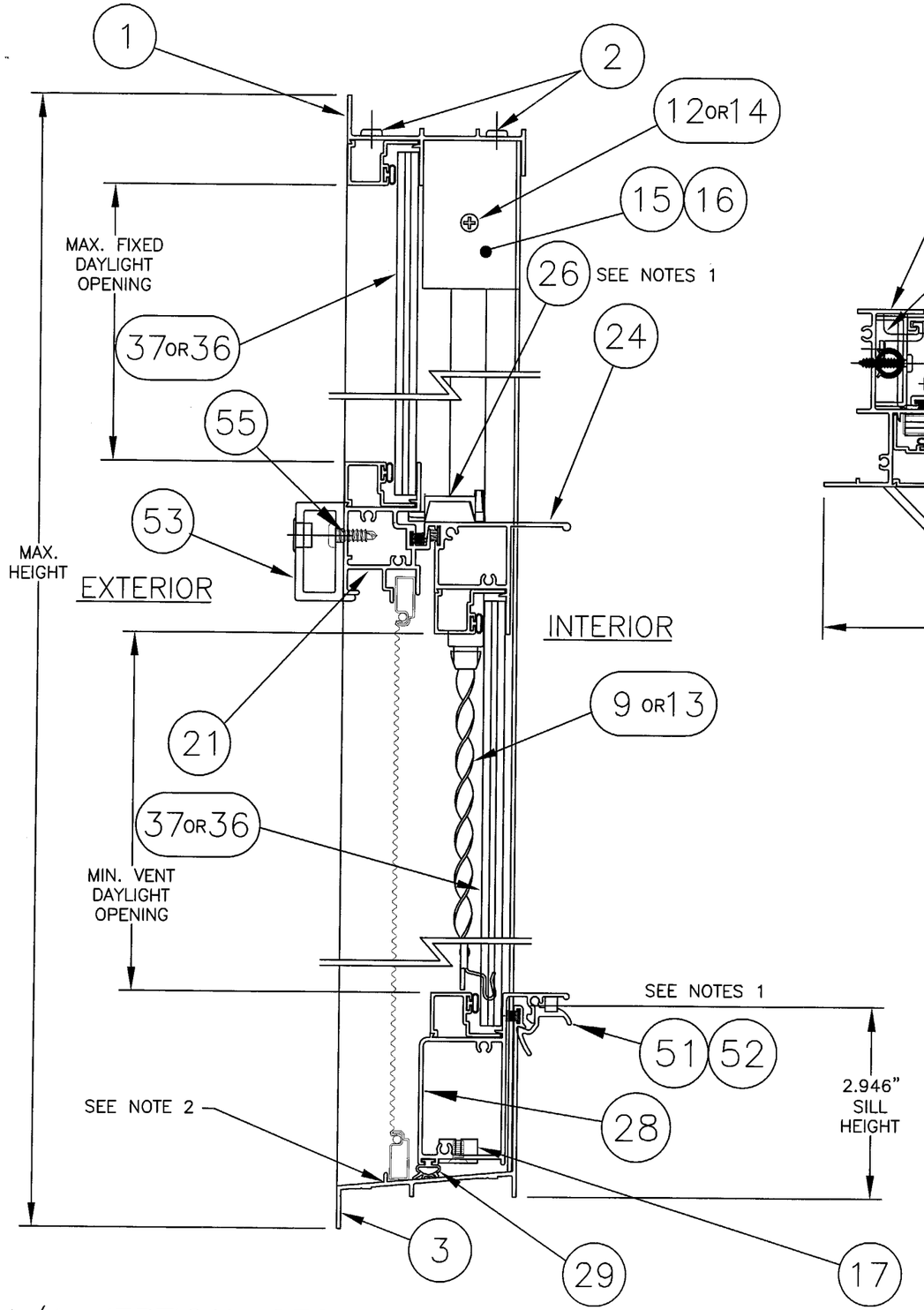

1/1 VERTICAL SECTION B–B

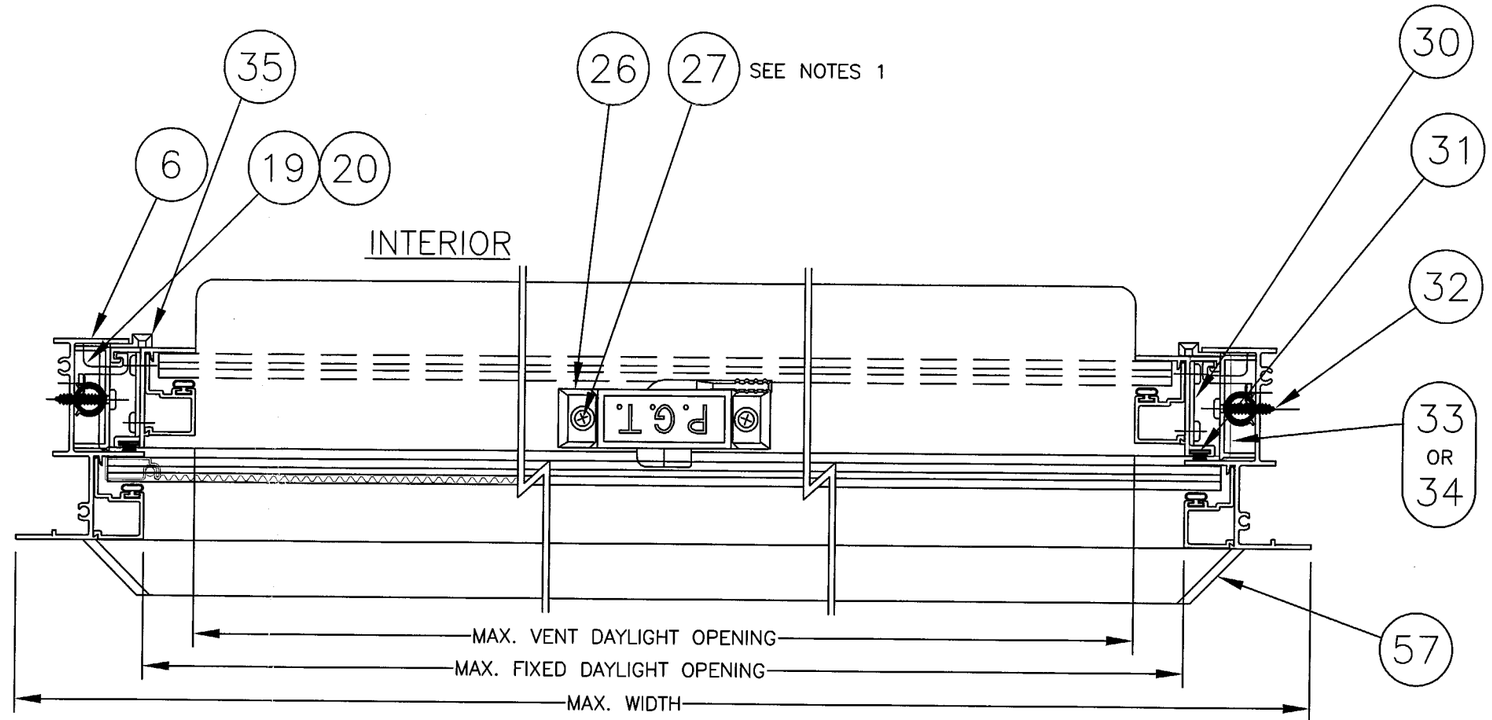

HORIZONTAL SECTION A–A

NOTES:

1. WINDOWS ARE EQUIPPED WITH ITEM 26, SWEEP LATCH LOCATED ON THE VENT TOP RAIL OR ITEM 51, BOTTOM LOCK LOCATED ON THE VENT BOTTOM RAIL.
2. TWO 5/8" WEEP NOTCHES REQUIRED (ONE AT EACH END OF SILL, SCREEN RETAINER LEG).

PRODUCT REVIEWED as complying with the Florida Building Code
Acceptance No. 05-0812.02
Expiration Date: 07/03/07
By
Miami Dade Product Control Division

Revsd By:	Date:	Revisions:
F.K.	7/20/05	F–NO CHG THIS SHT
F.K.	1/10/05	E–LOCKS & SILL HT DIM
F.K.	8/30/04	D–NO CHG THIS SHT
Drawn By: F.K.	Date: 10/4/01	

Robert L. Clark, P.E.
PE #39712
Structural

PGT INDUSTRIES

1070 TECHNOLOGY DRIVE
NOKOMIS, FL 34275

P.O. BOX 1529
NOKOMIS, FL 34274

Description: SECTIONS

Title: MULTI–STORY ALUM. SINGLE HUNG WINDOW

Series/Model:	Scale:	Sheet:	Drawing No.	Rev:
SH–800	NTS	3 of 8	4061	F

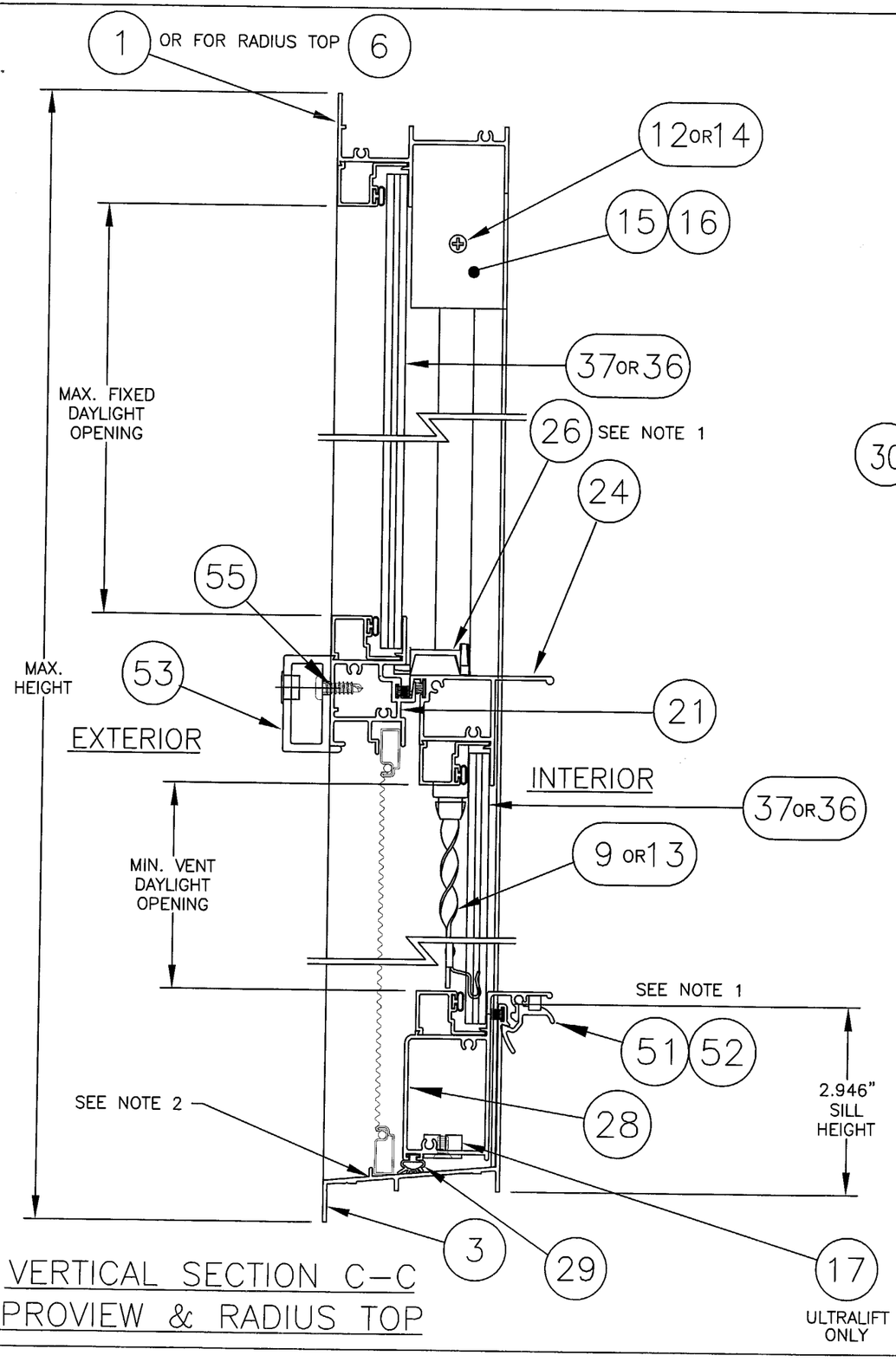

VERTICAL SECTION C–C
PROVIEW & RADIUS TOP

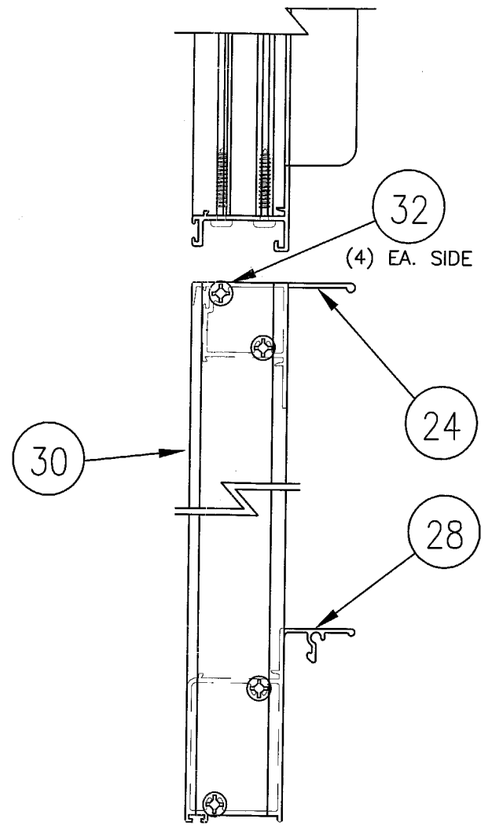

SASH CONSTRUCTION

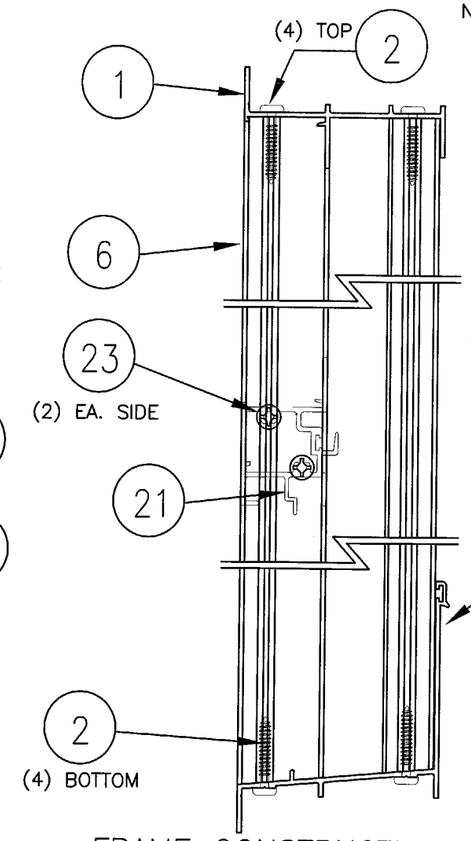

FRAME CONSTRUCTION (90° CORNERS)

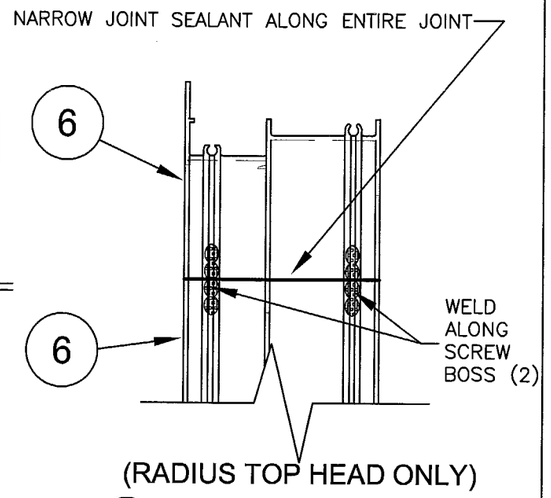

NOTE: NARROW JOINT SEALANT IS USED ON ALL 4 CORNERS OF THE FRAME, MEETING RAIL & RESPECTIVE ASSEMBLY SCREWS.

PRODUCT REVIEWED as complying with the Florida Building Code
Acceptance No. 05-0812.02
Expiration Date: 07/02/07
By M. Khalil
Miami Dade Product Control Division

NOTES:

1. WINDOWS ARE EQUIPPED WITH ITEM 26, SWEEP LATCH LOCATED ON THE VENT TOP RAIL OR ITEM 51, BOTTOM LOCK LOCATED ON THE VENT BOTTOM RAIL.
2. TWO 5/8" WEEP NOTCHES REQUIRED (ONE AT EACH END OF SILL, SCREEN RETAINER LEG).

Robert L. Clark, P.E.
PE #39712
Structural

PGT INDUSTRIES
1070 TECHNOLOGY DRIVE
NOKOMIS, FL 34275
P.O. BOX 1529
NOKOMIS, FL 34274

Revsd By:	Date:	Revisions:
F.K.	7/20/05	F–NO CHG THIS SHT
F.K.	1/10/05	E–NOTE 1 & SILL HT. DIM.
F.K.	8/30/04	D–NO CHG THIS SHT
Drawn By: F.K.	Date: 2/02/04	

Description: VERTICAL SECTION, PROVIEW & RADIUS TOP

Title: MULTI–STORY ALUM. SINGLE HUNG WINDOW

Series/Model:	Scale:	Sheet:	Drawing No.	Rev:
SH–800	NTS	4 of 8	4061	F

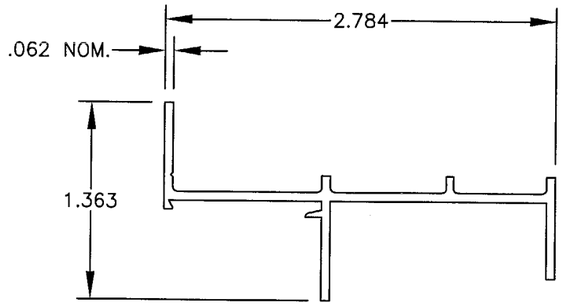

(1) FLANGE FRAME HEAD
MAT'L: 6063–T5
DWG# 4002

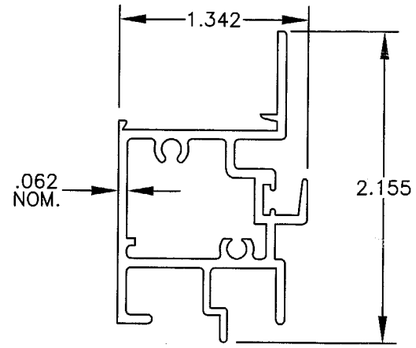

(21) FXD. MEETING RAIL
MAT'L: 6063HS–T54
DWG# 4054A

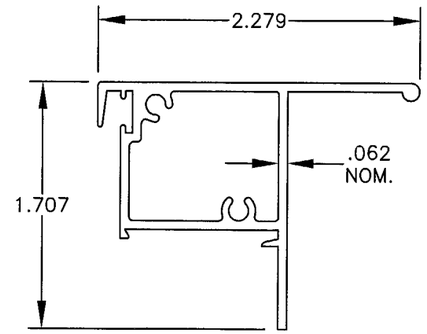

(24) SASH TOP RAIL
MAT'L: 6063HS–T54
DWG# 4006C

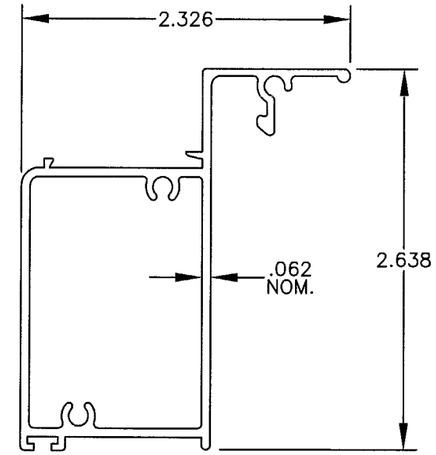

(28) SASH BOT. RAIL
MAT'L: 6063–T5
DWG# 4051A

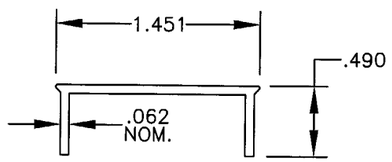

(7) SASH STOP
MAT'L: 6063–T5
DWG# 4025

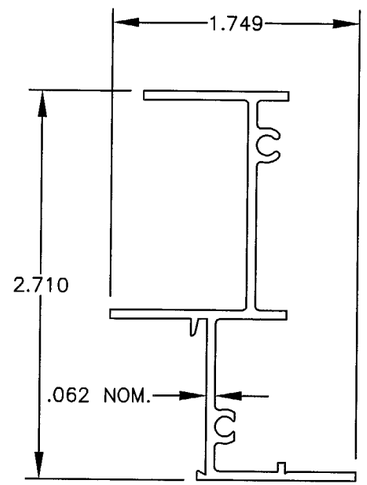

(6) FLANGE FRAME JAMB
MAT'L: 6063–T5
DWG# 4004

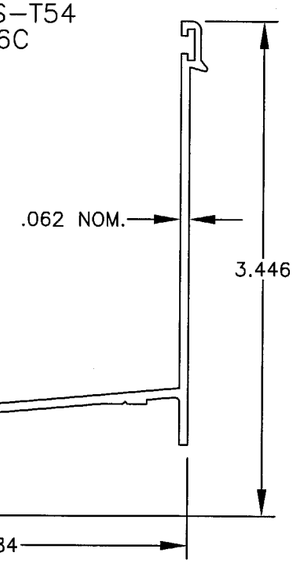

(3) FLANGE FRAME SILL
MAT'L: 6063–T5
DWG# 4050A

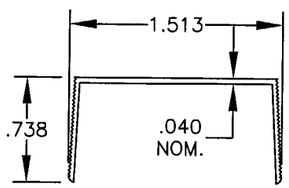

(16) SASH STOP COVER
MAT'L: 6063–T5
DWG# 4053

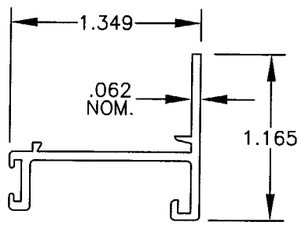

(30) SASH SIDE RAIL
MAT'L: 6063–T5
DWG# 4008

PRODUCT REVISED
as complying with the Florida Building Code
Acceptance No. 05-0812.02
Expiration Date 02/03/07
By
Miami Dade Product Control Division

Robert L. Clark, P.E.
PE #39712
Structural

PGT INDUSTRIES

1070 TECHNOLOGY DRIVE
NOKOMIS, FL 34275

P.O. BOX 1529
NOKOMIS, FL 34274

Revsd By:	Date:	Revisions:
F.K.	7/20/05	F–NO CHG THIS SHT
F.K.	1/10/05	E–NO CHG THIS SHT
F.K.	8/30/04	D–NO CHG THIS SHT
Drawn By: F.K.	Date: 10/4/01	

Description: EXTRUSION PROFILES

Title: MULTI–STORY ALUM. SINGLE HUNG WINDOW

Series/Model:	Scale:	Sheet:	Drawing No.	Rev:
SH–800	NTS	5 of 8	4061	F

ITEM	DWG#	MAT'L	PGT#	DESCRIPTION
1	4002	6063-T5	612225	Flange Frame Head
2	1155-1	S. STL	781PQX	#8 x 1" S.S. Quad Pn. SMS
3	4050A	6063-T5	64050	Flange Frame Sill
4	1062	FIN SEAL	61062G	Wstp., .187 x .270 fin seal
5	1155-1	S. STL	781PQX	#8 x 1" S.S. Quad Pn. SMS
6	4004	6063-T5	612227	Flange Frame Jamb
9	4029			Caldwell Spiral Balance, 5/8"
10	4029	STL	7BALTBKT	Balance Bottom Bracket Clip
11	1080	VINYL	6BALCVR916	Bal. Cover, Rigid Vinyl, 5/8"
12	1167	S. STL	78X34PPAX	#8 x .750 Ph. Pn. SMS S.S.
13	4029-1			Caldwell Ultra-Lift Balance, .670"
14		S. STL		#8 x 1.25 PH. Pn. SMS
15	4025	6063-T5	612244	Sash Stop
16	4053	6063-T5		Sash Stop Cover
17	4029-1	STL		Sash Bracket
18		ZINC PL.		#8 x 1 PH. PN. SMS
19	1207	PVC	6WCLIP	Windload Adapter
20		S. STL	78X38PPTX	#8 x .375 Ph. Pn. TEK S.S.
21	4054A	6063HS-T54	64054	Fixed Meeting Rail
22	4066	FIN SEAL	64066G	Wstp.,.187 x .230, fin seal
23	1155-1	S. STL	781PQX	#8 x 1" S.S. Quad Pn. SMS
24	4006C	6063HS-T54	64006	Sash Top Rail
25	1235	FIN SEAL	67S16G	Wstp.,.170 x .270 back, fin seal
26	1096	DIE-CAST	71096	Sweep Latch
27	1175	ZINC PL.	7858BB	#8 x 5/8" PH FH SMS
28	4051A	6063-T5	64051	Sash Bottom Rail
29	1226	VINYL	6TP249	Wstp., Bulb Vinyl
30	4008	6063-T5	612231	Sash Side Rail
31	1235	FIN SEAL	67S16G	Wstp.,.170 x .270 back, fin seal
32	1155-1	S. STL	781PQX	#8 x 1" S.S. Quad Pn. SMS
33	1085	CELCON	70344	Sash Top Guide, 9/16"
34	1086	CELCON	42505	Sash Top Guide, 11/16"
35	1268	NYLON 6/6	42501	Sash Face Guide
36	Glass 3/8 Laminated (1/8A,.090,3/16T)			
37	Glass 7/16 Laminated (3/16HS,.090,3/16HS)			
38		Dow #899 or #995		Glazing Silicone
39	4222	6063-T5	64222	Glazing Bead 7/16 Lami
40	985B	6063-T5	6985	Glazing Bead 7/16 Lami w/Grill Kit
41	988	6063-T5	6988	Glazing Bead 3/8 Lami
42	987	6063-T5	6987	Glazing Bead 3/8 Lami W/Grill Kit
43	1224	VINYL	TP-247	Vinyl Bulb Weatherstrip "Thick"
44	1622	EPDM	71622K	Glass Setting Block 3/32 x 25/64 x 1
45	1014	3105 H14	61011	Screen Frame
46	1630/1631	POLYPROPYLENE	71630/71631	Screen Corner Key
47	1073	S. STL	78835M	Screen Spring
48			61816	Screen Cloth
49	1278	ELASTOMETRIC PVC	70409K	Screen Pull
50	1624/1635	ELASTOMETRIC PVC	61624K/35K	Screen Spline
51	2740A	6063-T6	62740	Bottom Lock "optional"

ITEM	DWG#	MAT'L	PGT#	DESCRIPTION
52	1088	6063-T5	7SPRNG	Bottom Lock Spring
53	4063A	6061-T6	64063	Meeting Rail Reinforcement
54	947		41722	Grommet
55			78X38PPT	#10 x 3/4"PH PH TEK Screw
56			61062G	Wstp., .187 x .270 fin seal
57	4064	PLASTIC	44064	Mtg. Rail Tube End Cap

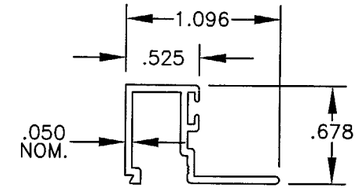

39 7/16 LAMI BEAD
MAT'L: 6063-T5
DWG# 4222

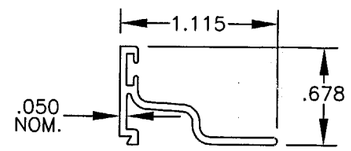

40 7/16 LAMI BEAD W/GRILL KIT
MAT'L: 6063-T5
DWG# 985

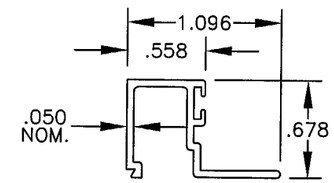

41 3/8 LAMI BEAD
MAT'L: 6063-T5
DWG# 988

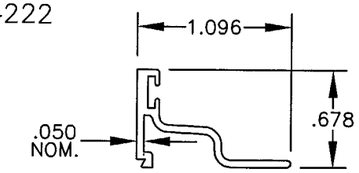

42 3/8 LAMI BEAD W/GRILL KIT
MAT'L: 6063-T5
DWG# 987

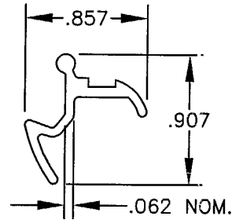

51 BOTTOM LOCK
MAT'L: 6063-T5
DWG# 2740

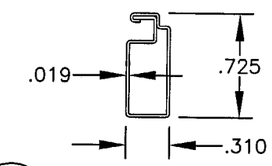

45 SCREEN FRAME
MAT'L: 3105-H14
DWG# 1014

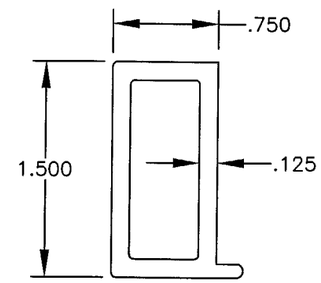

53 MEETING RAIL REINFORCEMENT
MAT'L: 6061-T6
DWG# 4063A

PRODUCT REVISED
as complying with the Florida Building Code
Acceptance No. 05-0812.02
Expiration Date 07/03/07
By: M Khan
Miami Dade Product Control Division

Revsd By:	Date:	Revisions:
F.K.	7/20/05	F-NO CHG THIS SHT
F.K.	1/10/05	E-NO CHG THIS SHT
F.K.	8/30/04	D-NO CHG THIS SHT
Drawn By: F.K.	Date: 10/4/01	

Robert L. Clark, P.E.
PE #39712
Structural

PGT INDUSTRIES

1070 TECHNOLOGY DRIVE
NOKOMIS, FL 34275

P.O. BOX 1529
NOKOMIS, FL 34274

Description: B.O.M. & EXTRUSION PROFILES CONT.

Title: MULTI-STORY ALUM. SINGLE HUNG WINDOW

Series/Model:	Scale:	Sheet:	Drawing No.	Rev:
SH-800	NTS	6 of 8	4061	F

TABLE 2. ADDITIONAL 5/16" TAPCON LOCATIONS REQ'D.					
		WINDOW SIZE			
	DETAIL	37" WIDE x 63" HIGH AND SMALLER		OVER 37"W x 63"H TO 53 1/8"W x 76"H	
		LOCATIONS	DP	LOCATIONS	DP
1/1 WINDOWS	A	6	132.9	5, 7	76.8
		3, 6	150.0	1, 2, 3, 4, 5, 7	150.0
VIEW & RAD. TOPS	B	--	101.4	--	70.6
		9, 10	150.0	8, 9, 10, 11, 12	150.0

TABLE 3. DP LIMITATIONS ANCHORING WITH 1/4" SS CRETE-FLEX					
1/1 WINDOWS	A	6	93.4	5, 7	53.9
		3, 6	105.8	1, 2, 3, 4, 5, 7	107.9
VIEW & RAD. TOPS	B	--	71.3	--	49.6
		9, 10	115.0	8, 9, 10, 11, 12	105.0

TABLE 4. DP LIMITATIONS ANCHORING WITH 1/4" TAPCONS					
1/1 WINDOWS	A	6	73.6	5, 7	42.5
		3, 6	84.8	1, 2, 3, 4, 5, 7	85.0
VIEW & RAD. TOPS	B	--	56.2	--	39.1
		9, 10	90.3	8, 9, 10, 11, 12	82.5

TABLE 5. DP LIMITATIONS ANCHORING WITH #12 SCREWS					
1/1 WINDOWS	A	6	44.3	5, 7	29.4
		3, 6	44.3	1, 2, 3, 4, 5, 7	45.8
VIEW & RAD. TOPS	B	--	38.8	--	27.0
		9, 10	62.1	8, 9, 10, 11, 12	56.7

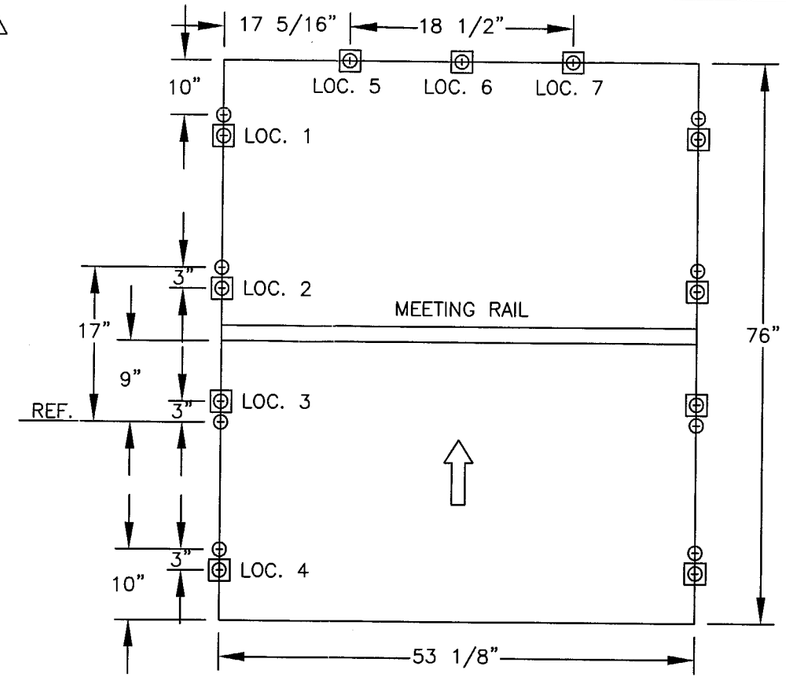

DETAIL A, 1/1 (F)

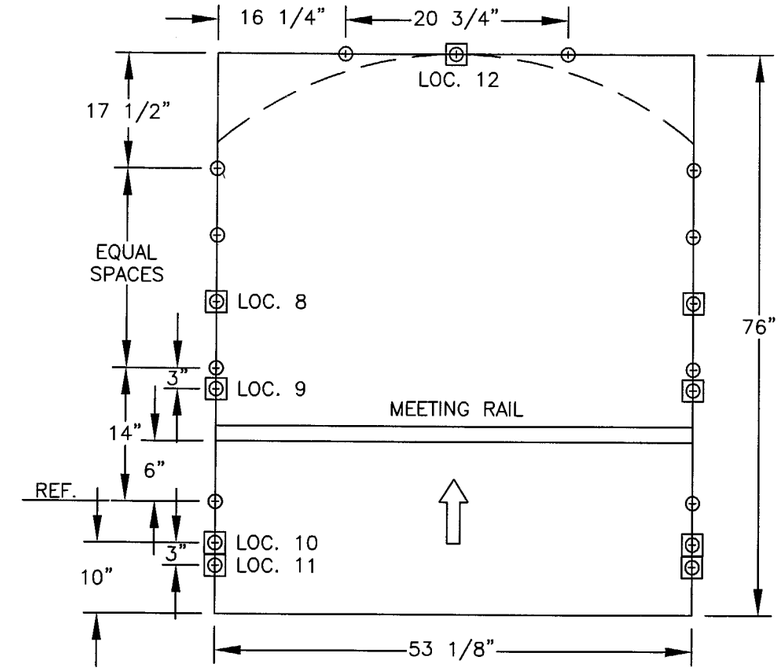

DETAIL B, PROVIEW & RAD. TOP (F)

PRODUCT REVISED
as complying with the Florida Building Code
Acceptance No. 05-0812.02
Expiration Date 02/03/07
By M. Hall
Miami Dade Product Control Division

MIAMI–DADE COUNTY ANCHORAGE NOTES: (F)

1. ANCHORAGE SPACING IS BASED ON A SINGLE ROW OF 5/16" TAPCONS. DP IS LIMITED WHEN ANCHORING WITH OTHER FASTENERS (SEE TABLES 3–5). 1/4" SS4 CRETE–FLEX MASONRY ANCHORS OR 1/4" TAPCONS ARE APPROVED FOR USE IN PLACE OF #12 SCREWS.
2. DETAILS A AND B DIMENSIONS ARE MAXIMUMS.
3. 1/1. WINDOWS: INSTALL ANCHORS PER DETAIL A AND TABLE 2.
4. PROVIEW AND RADIUS TOP WINDOWS: INSTALL ANCHORS PER DETAIL B AND TABLE 2.
5. WINDOWS INSTALLED OUTSIDE MIAMI–DADE COUNTY:
   FOR CONCRETE APPLICATIONS USE 1/4" TAPCONS AND FOR WOOD APPLICATIONS USE #12 SCREWS.

   1/1 WINDOWS: INSTALL PER DETAIL A BASIC LOCATIONS. LOCATIONS 1 THROUGH 7 NOT REQUIRED.

   VIEW AND RADIUS TOP WINDOWS: INSTALL PER DETAIL B BASIC LOCATIONS. LOCATIONS 8 THROUGH 12 NOT REQUIRED.

Robert L. Clark, P.E.
PE #39712
Structural

PGT INDUSTRIES
1070 TECHNOLOGY DRIVE
NOKOMIS, FL 34275
P.O. BOX 1529
NOKOMIS, FL 34274

Revsd By:	Date:	Revisions:
F.K.	7/20/05	F–REVISE ANCHORAGE/FBC
F.K.	1/10/05	NEW ANCHOR SHT
Drawn By: F.K.	Date: 10/4/01	

Description: ANCHORAGE SPACING

Title: MULTI–STORY ALUM. SINGLE HUNG WINDOW

Series/Model:	Scale:	Sheet:	Drawing No.	Rev:
SH–800	NTS	7 of 8	4061	F

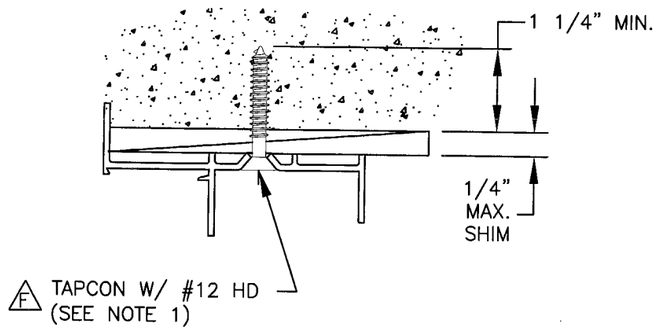

DETAIL 3 – NO BUCK

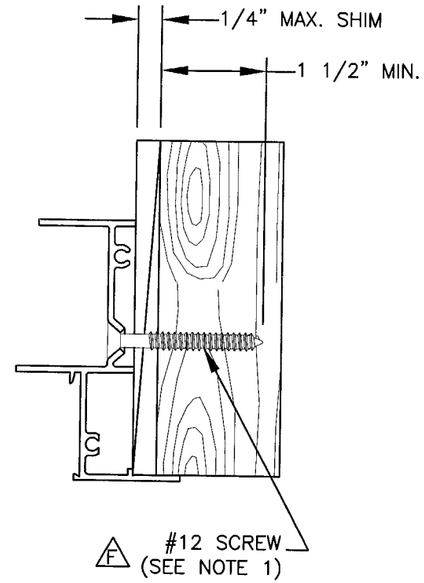

DETAIL 4 – 2x WOOD BUCK
(SEE NOTE 2)

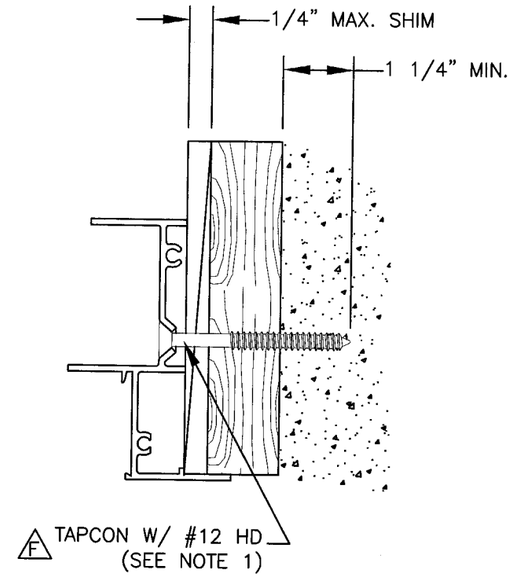

DETAIL 5 – 1x WOOD BUCK
(SEE NOTE 2)

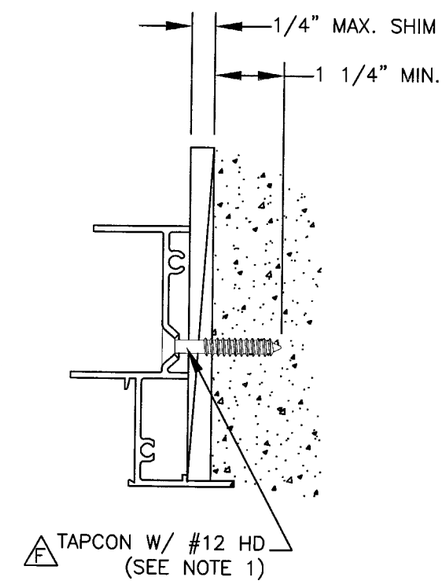

DETAIL 6 – NO BUCK

TYPICAL JAMB ANCHORAGE

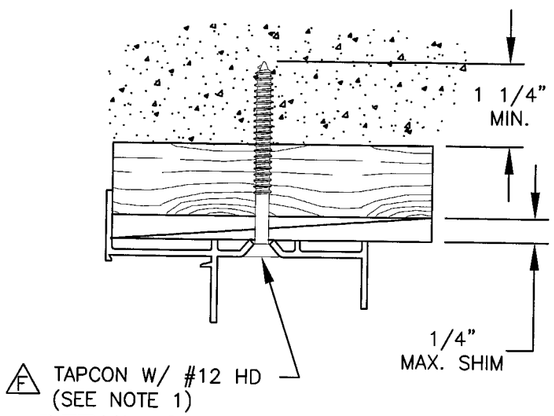

DETAIL 2 – 1x WOOD BUCK
(SEE NOTE 2)

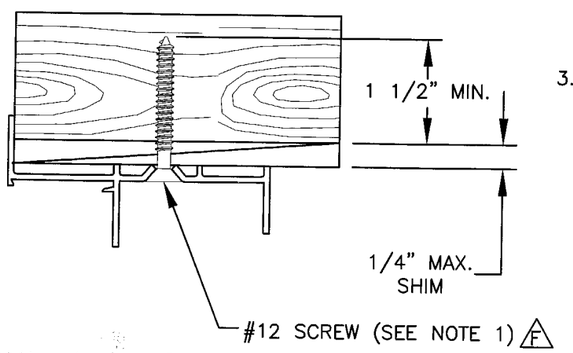

DETAIL 1 – 2x WOOD BUCK
(SEE NOTE 2)

TYPICAL HEAD ANCHORAGE

NOTES:

F 1. FOR CONCRETE APPLICATIONS IN MIAMI–DADE COUNTY, USE ONLY MIAMI–DADE COUNTY APPROVED ELCO TAPCONS. FOR WOOD APPLICATIONS 1/4" SS4 CRETE–FLEX OR 1/4" TAPCONS ARE APPROVED FOR USE IN PLACE OF #12 SCREWS.

2. WOOD BUCKS DEPICTED IN THE SECTIONS ON THIS PAGE AS 1x ARE BUCKS WHOSE TOTAL THICKNESS IS LESS THAN 1 1/2". WOOD BUCKS DEPICTED AS 2x ARE 1 1/2" THICK OR GREATER. INSTALLATION TO THE SUBSTRATE OF WOOD BUCKS TO BE ENGINEERED BY OTHERS OR AS APPROVED BY AUTHORITY HAVING JURISDICTION.

3. FOR ATTACHMENT TO ALUMINUM: THE MATERIAL SHALL BE A MINIMUM STRENGTH OF 6063–T5 AND A MINIMUM OF 1/8" THICK. THE ALUMINUM STRUCTURAL MEMBER SHALL BE OF A SIZE TO PROVIDE FULL SUPPORT TO THE WINDOW JAMB SIMILAR TO THAT SHOWN IN DETAILS 1 AND 6 ABOVE FOR 2x WOOD BUCKS. THE ANCHOR SHALL BE A #12 SHEET METAL SCREW WITH FULL ENGAGEMENT INTO THE ALUMINUM. IF THESE CRITERIA ARE MET THE PRESSURES AND ANCHORAGE SPACING FOR #12 SCREWS SHOWN ON SHEET 7 MAY BE USED.

PRODUCT REVISED
as complying with the Florida Building Code
Acceptance No. 05-0812.02
Expiration Date 07/03/02
By
Miami Dade Product Control Division

Revsd By:	Date:	Revisions:
F.K.	7/20/05	F–REVISE NOTE 1
F.K.	1/10/05	E–UPDATES AS NOTED
F.K.	8/30/04	D–REMOVE MFR NOTE 1
Drawn By: F.K.	Date: 10/4/01	

Robert L. Clark, P.E.
PE #39712
Structural

PGT INDUSTRIES

1070 TECHNOLOGY DRIVE
NOKOMIS, FL 34275

P.O. BOX 1529
NOKOMIS, FL 34274

Description: ANCHORAGE DETAILS

Title: MULTI–STORY ALUM. SINGLE HUNG WINDOW

Series/Model:	Scale:	Sheet:	Drawing No.	Rev:
SH–800	NTS	8 of 8	4061	F