MIAMI-DADE COUNTY

BUILDING CODE COMPLIANCE OFFICE (BCCO)
PRODUCT CONTROL DIVISION

MIAMI-DADE COUNTY, FLORIDA
METRO-DADE FLAGLER BUILDING
140 WEST FLAGLER STREET, SUITE 1603
MIAMI, FLORIDA 33130-1563
(305) 375-2901 FAX (305) 375-2908
www.buildingcodeonline.com

NOTICE OF ACCEPTANCE (NOA)

Marvin Windows & Doors
Highway 11 West (P.O. Box 100)
Warroad, MN 56763

SCOPE:

This NOA is being issued under the applicable rules and regulations governing the use of construction materials. The documentation submitted has been reviewed by Miami-Dade County Product Control Division and accepted by the Board of Rules and Appeals (BORA) to be used in Miami Dade County and other areas where allowed by the Authority Having Jurisdiction (AHJ).

This NOA shall not be valid after the expiration date stated below. The Miami-Dade County Product Control Division (In Miami Dade County) and/or the AHJ (in areas other than Miami Dade County) reserve the right to have this product or material tested for quality assurance purposes. If this product or material fails to perform in the accepted manner, the manufacturer will incur the expense of such testing and the AHJ may immediately revoke, modify, or suspend the use of such product or material within their jurisdiction. BORA reserves the right to revoke this acceptance, if it is determined by Miami-Dade County Product Control Division that this product or material fails to meet the requirements of the applicable building code.

This product is approved as described herein, and has been designed to comply with the Florida Building Code, including the High Velocity Hurricane Zone.

DESCRIPTION: Clipped Extruded Aluminum Tube Mullion

APPROVAL DOCUMENT: Drawing No. **1223**, titled "Aluminum Tube Clipped Mullions", sheet 1 thru 8 of 8, prepared by W.W. Schaefer Engineering & Consulting, P.A., dated 05/07/03 with revision "**A1**" on 08/12/05, signed and sealed by Warren W. Shaefer, P.E., bearing the Miami-Dade County Product Control Revision stamp with the Notice of Acceptance number and expiration date by the Miami-Dade County Product Control Division.

MISSILE IMPACT RATING: Large and Small Missile Impact

LABELING: Each unit shall bear a permanent label with the manufacturer's name or logo, city, state and following statement: "Miami-Dade County Product Control Approved", unless otherwise noted herein.

RENEWAL of this NOA shall be considered after a renewal application has been filed and there has been no change in the applicable building code negatively affecting the performance of this product.

TERMINATION of this NOA will occur after the expiration date or if there has been a revision or change in the materials, use, and/or manufacture of the product or process. Misuse of this NOA as an endorsement of any product, for sales, advertising or any other purposes shall automatically terminate this NOA. Failure to comply with any section of this NOA shall be cause for termination and removal of NOA.

ADVERTISEMENT: The NOA number preceded by the words Miami-Dade County, Florida, and followed by the expiration date may be displayed in advertising literature. If any portion of the NOA is displayed, then it shall be done in its entirety.

INSPECTION: A copy of this entire NOA shall be provided to the user by the manufacturer or its distributors and shall be available for inspection at the job site at the request of the Building Official.

This NOA **revises NOA# 03-0811.02** consists of this page 1 and evidence pages E-1, as well as approval document mentioned above.

The submitted documentation was reviewed by **Jaime D. Gascon, P.E.**

PRODUCT CONTROL ACCEPTED

J Gascon
3/10/06

Marvin Windows & Doors

NOTICE OF ACCEPTANCE: EVIDENCE SUBMITTED

A. DRAWINGS

1. Manufacturer's die drawings and sections.
2. Drawing No. **1223**, titled "Aluminum Tube Clipped Mullions", sheet 1 thru 8 of 8, prepared by W.W. Schaefer Engineering & Consulting, P.A., dated 05/07/03 with revision "**A1**" on 08/12/05, signed and sealed by Warren W. Shaefer, P.E.

B. TESTS

1. Test reports on 1) Uniform Static Air Pressure Test, Loading per FBC, TAS 20294
   2) Large Missile Impact Test per FBC, TAS 201-94
   3) Cyclic Wind Pressure Loading per FBC, TAS 203-94

   along with marked-up drawings and installation diagram of a direct glazed wood fixed window assembly w/ vertical and horizontal alum. tube mullions, prepared by Architectural Testing, Inc., Test Report No. **ATI-02-45131.01**, dated 07/01/03, signed and sealed by Joseph A. Reed, P.E.
   "Submitted under NOA# 03-0811.02"

C. CALCULATIONS

1. Revised Anchor Calculations and Structural Analysis, prepared by W.W. Schaefer Engineering & Consulting, P.A., dated 08/11/05, signed and sealed by W. W. Schaefer, P.E. - ASTM E1300-98 does not apply.

D. QUALITY ASSURANCE

1. Miami Dade Building Code Compliance Office.

E. MATERIAL CERTIFICATIONS

1. None.

F. STATEMENTS

1. Statement letter of conformance, dated June 02, 2003, signed and sealed by W. W. Schaefer, P.E.
2. Statement letter of no financial interest, dated June 02, 2003, signed and sealed by W. W. Schaefer, P.E.

G. OTHER

1. Notice of Acceptance **No. 03-0811.02**, issued to "Clipped Extruded Aluminum Tube Mullion", dated 10/30/03, and expiring on 10/30/08.

Jaime D. Gascon, P.E.
Chief, Product Control Division
NOA No 05-0824.06
Expiration Date: October 30, 2008
Approval Date: March 30, 2006

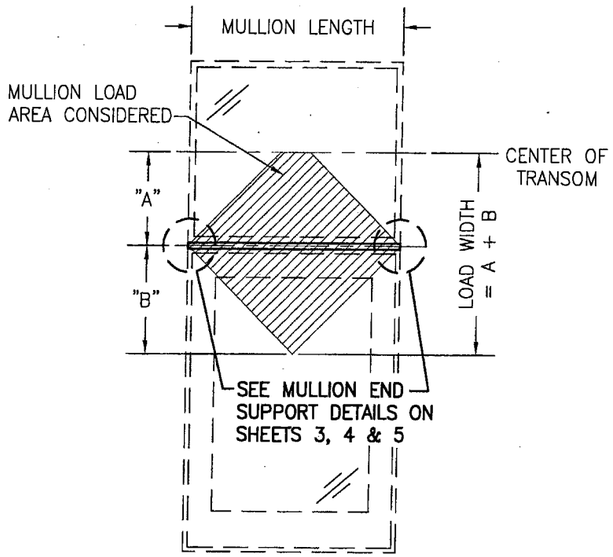

"A" = LESSER OF (MULLION LENGTH/2) OR (TRANSOM HEIGHT/2)
"B" = MULLION LENGTH/2

SINGLE WINDOW OR DOOR WITH FIXED TRANSOM
(SEE LOAD TABLE 1.0)

NOTE: WINDOW/DOOR MAY BE ANY FIXED OR OPERABLE UNIT

NOTE: MULLION MAY BE HORIZONTAL OR VERTICAL

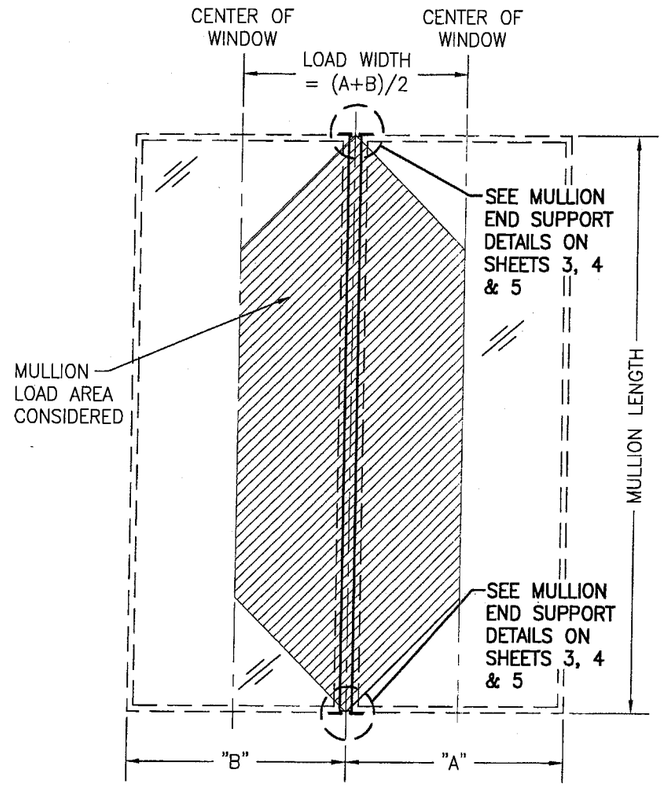

FIXED WINDOW TO FIXED WINDOW WHEN WINDOW WIDTHS ARE LESS THAN OR EQUAL TO THE MULLION LENGTH
(SEE LOAD TABLE 1.0)

NOTE: MULLION MAY BE HORIZONTAL OR VERTICAL

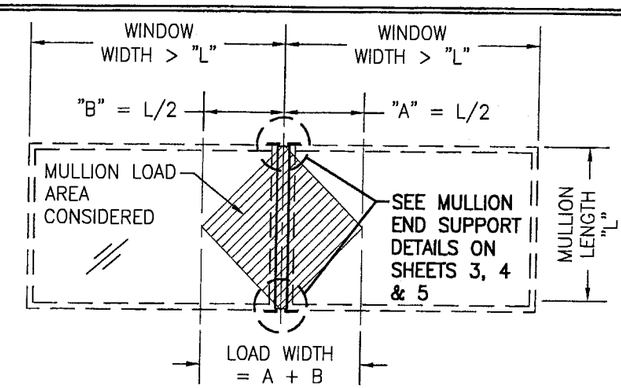

FIXED WINDOW TO FIXED WINDOW WHEN WINDOW WIDTHS ARE GREATER THAN THE MULLION LENGTH
(SEE LOAD TABLE 1.0)

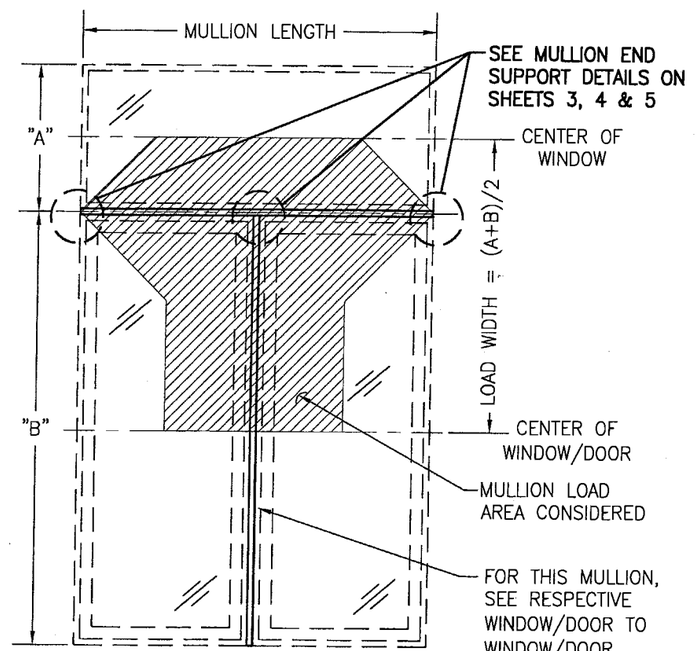

TWO (2) SINGLE DOORS OR WINDOWS WITH A SINGLE FIXED TRANSOM
(SEE LOAD TABLE 2.0)

NOTE: DOORS/WINDOWS MAY BE OPERABLE OR FIXED.

GENERAL NOTES (ALL DRAWING SHEETS):

1. DOORS & WINDOWS SHALL BE UNDER SEPERATE N.O.A. SEE THE PRODUCTS SPECIFIC N.O.A. FOR THEIR USE.
2. THESE MULLION SYSTEMS HAVE BEEN ANALYZED AND CERTIFIED FOR DESIGN PRESSURES NOT TO EXCEED THOSE SHOWN IN THE LOAD TABLES.
3. OPENINGS, INCLUDING BUCKS (IF USED AS SUPPORT), MUST BE DESIGNED & CONSTRUCTED TO WITHSTAND WIND LOADS TRANSFERRED BY THE MULLIONS END REACTIONS & SUPPORTED WINDOWS/DOORS.
4. ALL MATERIALS & FASTENERS SHALL BE IN ACCORDANCE WITH THESE DRAWINGS & MAY NOT VARY UNLESS SPECIFICALLY MENTIONED ON THE DRAWINGS.
5. THESE MULLION SYSTEMS HAVE BEEN DESIGNED IN ACCORDANCE WITH THE 2004 FLORIDA BUILDING CODE (FBC) FOR HIGH VELOCITY HURRICANE ZONES (HVHZ).
6. ANY PRODUCT APPROVED WINDOW/DOOR MAY BE SUPPORTED BY THESE MULLIONS PROVIDING THEY ARE PROPERLY ANCHORED TO THE MULLION.
7. ALLOWABLE PRESSURE ON THE MULLED UNIT SHALL BE CONTROLLED BY THE LESSER ALLOWABLE PRESSURE OF THE MULLION, THE MULLION END CONNECTION OR THE INDIVIDUAL DOOR/WINDOW UNITS.
8. WINDOW/DOOR SIZES SHALL BE AS RESTRICTED BY THEIR OWN INDIVIDUAL N.O.A.'S.
9. FOR WINDOW OR DOOR FRAME TO OPENING ATTACHMENT, SEE THE RESPECTIVE PRODUCT N.O.A. DRAWINGS/SPECIFICATIONS FOR THE WINDOW/DOOR.
10. MULLION LENGTHS ARE RESTRICTED BY THOSE SHOWN IN THE TABLES.
11. THE LOADS IN THESE TABLES CONSIDER WORSE CASE OF MULLION STRESS, DEFLECTION AND END REACTION.
12. ANY CONDITIONS NOT COVERED IN THIS CERTIFICATION SHALL BE SUBJECT TO SEPERATE ENGINEERING REVIEW.
13. ALL TUBES SHALL BE PRE-PAINTED 6063-T6 ALUMINUM. ALL CONNECTION ANGLES SHALL BE MIN. 6063-T5 ALUMINUM. ALL U-CLIPS & T-CLIPS SHALL BE MIN. 6063-T5 OR T6 ALUMINUM.
14. ALL EMBEDMENTS SPECIFIED ARE TO BE BEYOND WALL FINISH.
15. MULLION TUBES MUST BE CONTINUOUS FROM END TO END.
16. WHEN VERTICALLY STACKED, THE MANUFACTURER/INSTALLER SHALL INSURE THAT THE DEAD WEIGHT OF THE ABOVE WINDOWS WILL NOT CAUSE UNDO STRESS ON THE BELOW WINDOWS. THESE MULLIONS ARE DESIGNED TO SUPPORT WIND LOAD ONLY & ARE NOT CONSIDERED TO SUPPORT DEAD LOAD OF THE WINDOWS/DOORS.
17. THIS MULLION PRODUCT HAS BEEN TESTED IN ACCORDANCE WITH FLORIDA BUILDING CODE PROTOCOLS TAS-201, TAS-202 & TAS-203 FOR LARGE MISSILE IMPACT, STRUCTURAL & CYCLIC TESTING.
18. THESE MULLIONS ARE ACCEPTABLE FOR USE WITH IMPACT & NON-IMPACTED RATED WINDOWS & DOORS.

NOTE: ATTACHMENT OF WINDOW/DOOR FRAME TO MULLIONS SHALL BE AS REQUIRED BY THE INDIVIDUAL WINDOW/DOOR N.O.A. FOR ATTACHMENT TO BUCK/OPENING EXCEPT THAT SPECIFIED FRAME SCREWS MUST BE EQUILAVENT SIZE SMS SCREWS PREDILLED INTO TUBE OR SELF TAPPING TEK SCREWS

PRODUCT REVIEWED as complying with the Florida Building Code. Acceptance No. 05-0824.04 Expiration Date: 10/30/08 By: Miami-Dade Product Control Division

NO.	REVISION DESCRIPTION	BY	DATE
A1	UPDATE GENERAL NOTES TO 2004 CODE COMPLIANT	K.P.S.	08/12/05

DRAWN BY: K.P.S. | CHECKED BY: W.W.S.
PLOT: 1=24 | DATE: 05/07/03

DRAWING TITLE: ALUMINUM TUBE CLIPPED MULLIONS

MANUFACTURER: MARVIN WINDOWS & DOORS
HIGHWAY 11 WEST
WARROAD, MN 56763-0100
218-386-1430

CONSULTANTS: W. W. SCHAEFER ENGINEERING & CONSULTING, P.A.
8895 N. MILITARY TRAIL; SUITE C-204
PALM BEACH GARDENS, FL 33410
PHONE: 561-775-4902 FAX: 561-775-4903

CERTIFICATION: AUG 12 2005
WARREN W. SCHAEFER, P.E.
P.E. NO. 44135

DRAWING NO. 1223 | REV. A
SHEET NO. 1 OF 8

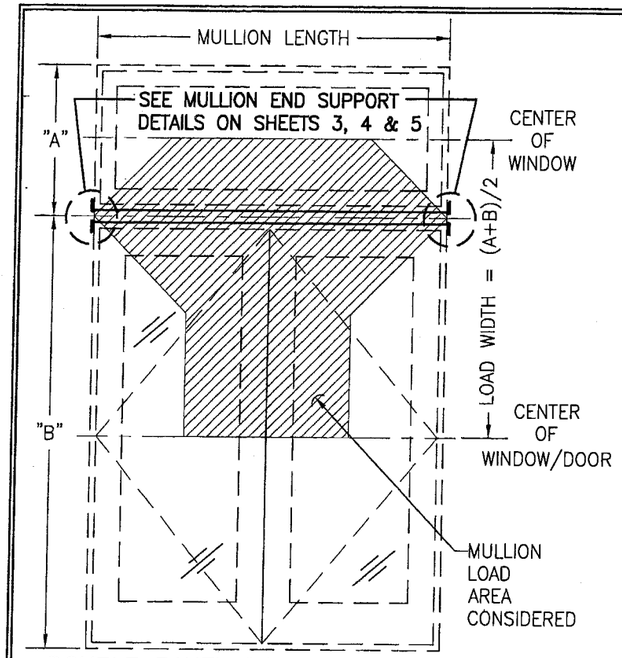

DOUBLE PANEL DOOR OR CASEMENT WINDOW WITH A SINGLE FIXED TRANSOM
(SEE LOAD TABLE 2.0)

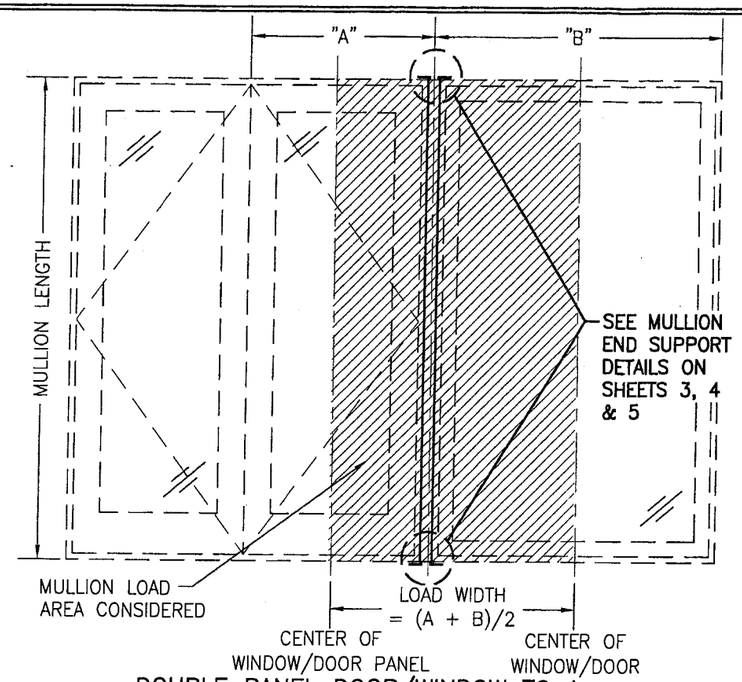

DOUBLE PANEL DOOR/WINDOW TO A SINGLE DOOR OR FIXED SIDELIGHT
(SEE LOAD TABLE 3.0)

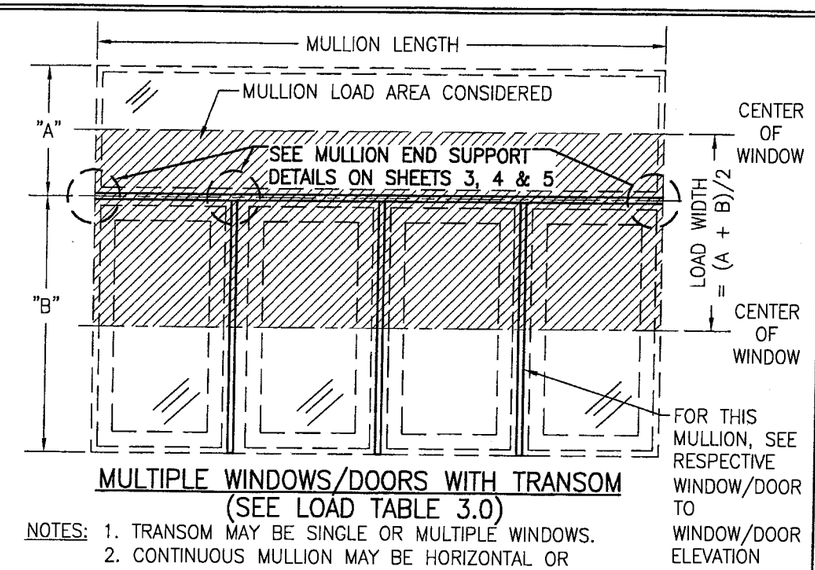

MULTIPLE WINDOWS/DOORS WITH TRANSOM
(SEE LOAD TABLE 3.0)

NOTES: 1. TRANSOM MAY BE SINGLE OR MULTIPLE WINDOWS.
2. CONTINUOUS MULLION MAY BE HORIZONTAL OR VERTICAL (HORIZONTAL SHOWN).

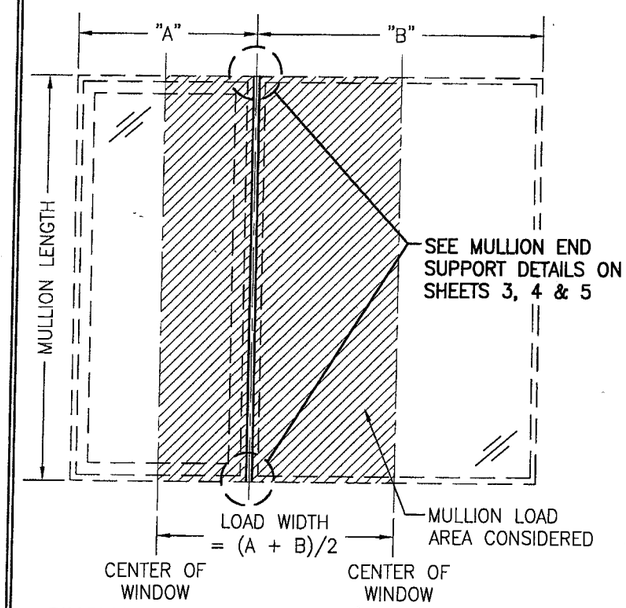

SINGLE OPERABLE DOOR/WINDOW TO A SINGLE OPERABLE OR FIXED DOOR/WINDOW
(SEE LOAD TABLE 3.0)

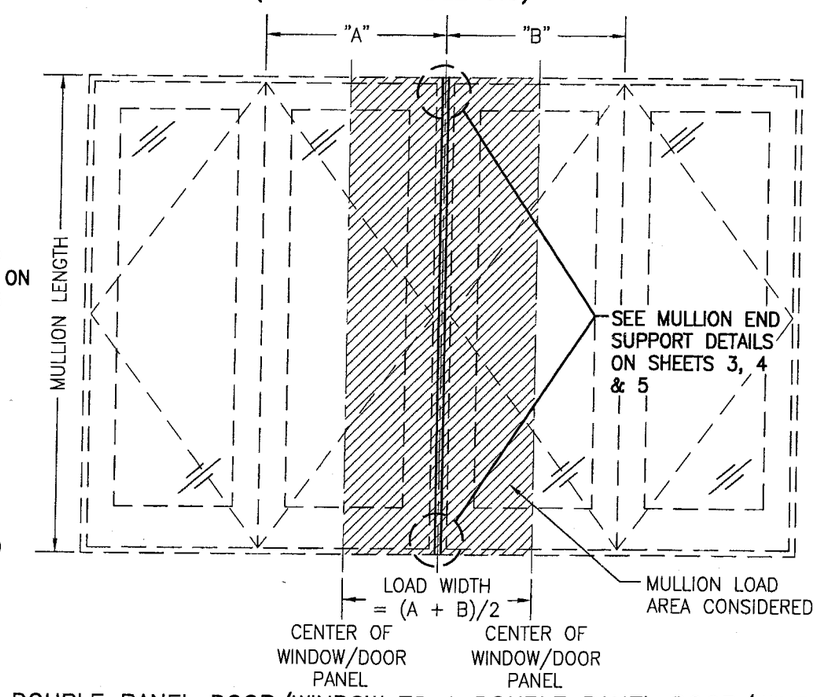

DOUBLE PANEL DOOR/WINDOW TO A DOUBLE PANEL DOOR/WINDOW
(SEE LOAD TABLE 3.0)

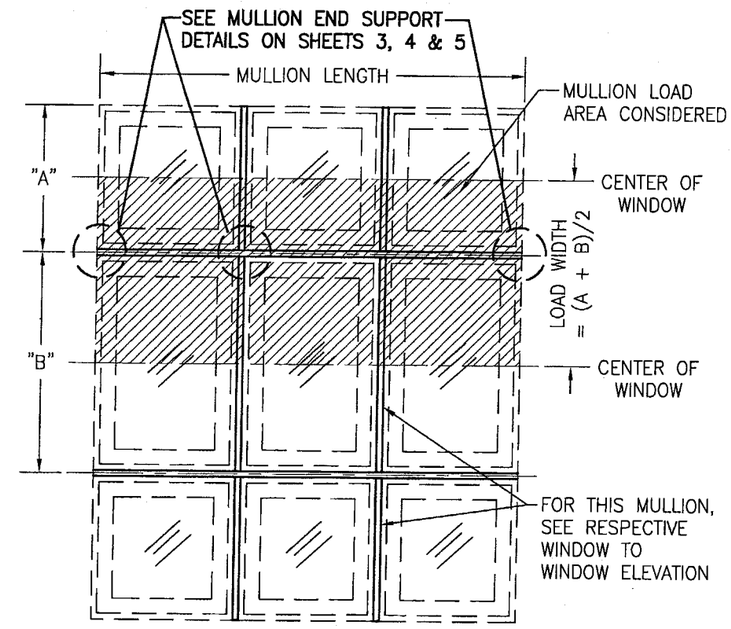

MULTIPLE WINDOWS (SEE LOAD TABLE 3.0)
(CONTINUOUS MULLION MAY BE HORIZONTAL OR VERTICAL (HORIZONTAL SHOWN))

NOTE: ATTACHMENT OF WINDOW/DOOR FRAME TO MULLIONS SHALL BE AS REQUIRED BY THE INDIVIDUAL WINDOW/DOOR N.O.A. FOR ATTACHMENT TO BUCK/OPENING EXCEPT THAT SPECIFIED FRAME SCREWS MUST BE EQUIVALENT SIZE SMS SCREWS PREDILLED INTO TUBE OR SELF TAPPING TEK SCREWS

PRODUCT REVISED
as complying with the Florida Building Code
Acceptance No. 05-0824.04
Expiration Date 10/30/08
By
Miami-Dade Product Control Division

DRAWN BY: K.P.S.	CHECKED BY: W.W.S.
PLOT: 1=24	DATE: 05/07/03

NO.	REVISION DESCRIPTION	BY	DATE

DRAWING TITLE
ALUMINUM TUBE CLIPPED MULLIONS

MANUFACTURER
MARVIN WINDOWS & DOORS
HIGHWAY 11 WEST
WARROAD, MN 56763-0100
218-386-1430

CONSULTANTS
W. W. SCHAEFER ENGINEERING & CONSULTING, P.A.
8895 N. MILITARY TRAIL; SUITE C-204
PALM BEACH GARDENS, FL 33410
PHONE: 561-775-4902 FAX: 561-775-4903

CERTIFICATION
AUG 12 2005
WARREN W. SCHAEFER, P.E.
P.E. NO. 44135

DRAWING NO. 1223
REV. A
SHEET NO. 2 OF 8

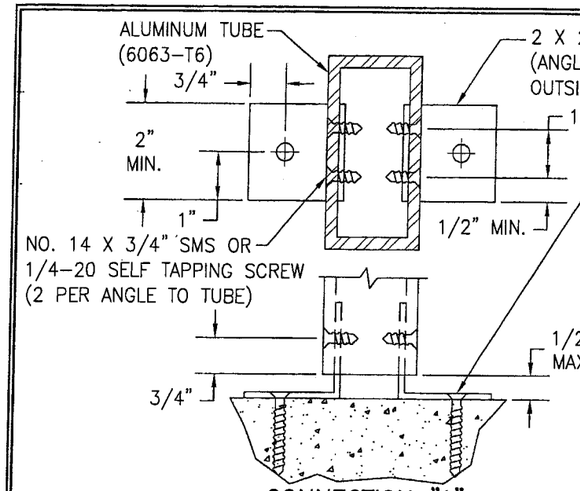

CONNECTION "A"
(INTO BLOCK/CONCRETE OR METAL STUD)

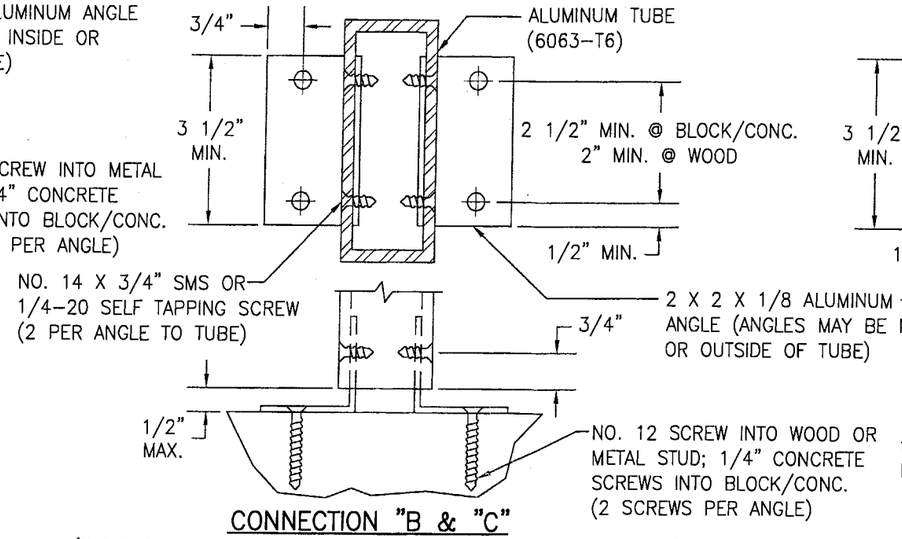

CONNECTION "B & "C"
(INTO WOOD, METAL STUD, BLOCK OR CONCRETE)
"B" = INTO WOOD OR METAL STUD
"C" = INTO BLOCK/CONCRETE

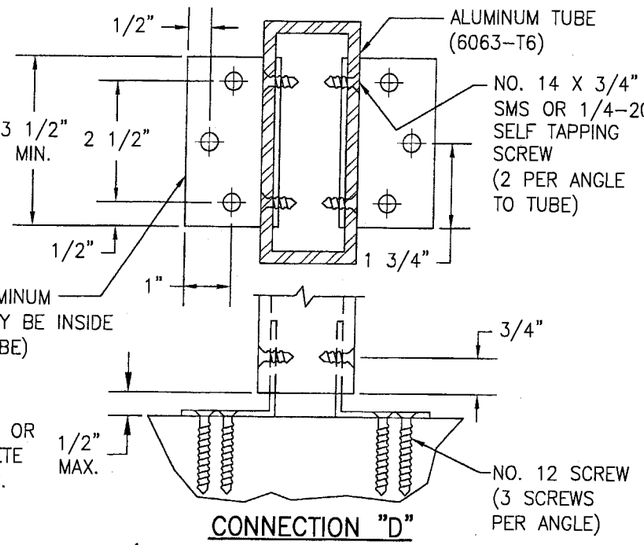

CONNECTION "D"
(INTO WOOD OR METAL STUD)

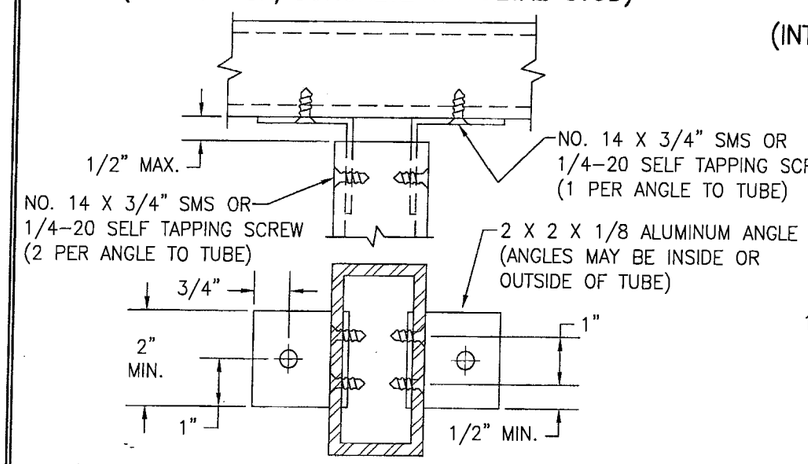

TYP. TUBE TO TUBE CONNECTION
(CONSIDER EQUIVALENT TO CONNECTION "A")

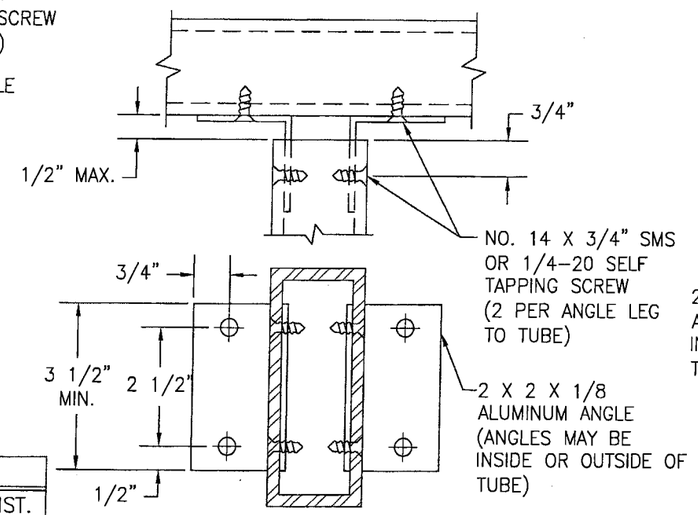

TYP. TUBE TO TUBE CONNECTION
(CONSIDER EQUIVALENT TO OR STRONGER THAN ALL CONNECTIONS)

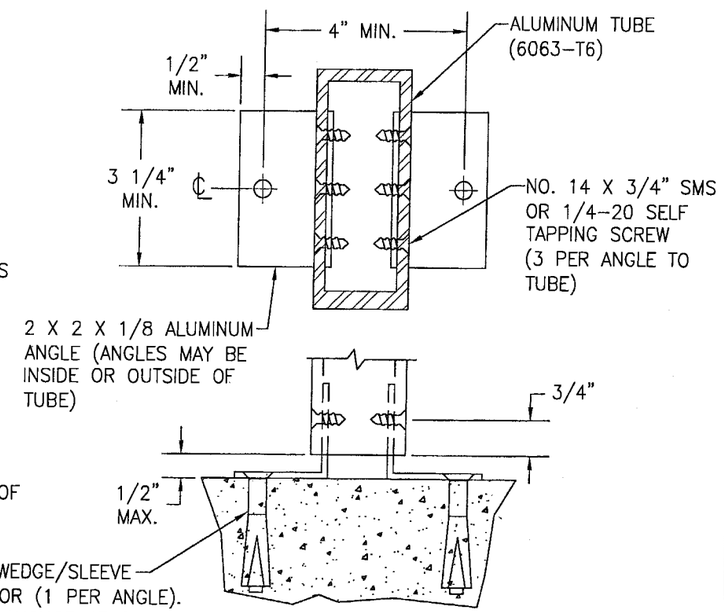

CONNECTION "E" & "F"
(INTO CONCRETE OR CONCRETE FILLED BLOCK)
"E" = 3/8" ANCHOR
"F" = 1/2" ANCHOR

ANCHOR REQUIREMENTS

(3) ANCHOR	SUBSTRATE	MIN. EMBED	MIN. EDGE DIST.
NO. 12 SMS	(4) WOOD	1 3/8"	3/4"
NO. 12 TEK SCREW	(6) MIN. 18 GA. METAL STUD	FULL	1/2"
(1) 1/4" CONCRETE SCREW	(5) BLOCK/CONCRETE	1 1/4"	2 1/4"
(2) 3/8" WEDGE/SLEEVE ANCHOR	(5) BLOCK OR CONCRETE	2"	2 1/4"
(2) 1/2" WEDGE/SLEEVE ANCHOR	CONCRETE FILLED BLOCK OR CONCRETE	2 1/2"	3"

(1) CONCRETE SCREWS MAY BE ELCO TAPCONS OR HILTI KWIK-CON II'S.
(2) WEDGE/SLEEVE ANCHORS MAY BE RAMSET RED HEAD DYNABOLTS OR POWERS RAWL POWER BOLT.
(3) IN COASTAL AREAS, ALL MULLION ANCHORS TO SUBSTRATE MUST BE STAINLESS STEEL.
(4) WOOD = MIN. NO. 3 GRADE SOUTHERN PINE (G = 0.55)
(5) CONCRETE = MIN. 2500 PSI.
(6) METAL STUD = MIN. 18 GA. Fy = 33,000 PSI.

MULLION END CONNECTION DETAILS USING CLIP ANGLES

PRODUCT REVISED
as complying with the Florida Building Code
Acceptance No. 05-0824.04
Expiration Date 10/30/08
By
Miami Dade Product Control Division

NO.	REVISION DESCRIPTION	BY	DATE
A2	UPDATE ANCHOR REQUIREMENTS EDGE DISTANCE & NOTES	K.P.S.	08/12/05
A3	UPDATE CONN. "E" & "F" DIMS.	K.P.S.	08/12/05

DRAWN BY: K.P.S.
CHECKED BY: W.W.S.
PLOT: 1=3
DATE: 05/07/03

DRAWING TITLE: ALUMINUM TUBE CLIPPED MULLIONS

MANUFACTURER: MARVIN WINDOWS & DOORS
HIGHWAY 11 WEST
WARROAD, MN 56763-0100
218-386-1430

CONSULTANTS: W. W. SCHAEFER ENGINEERING & CONSULTING, P.A.
8895 N. MILITARY TRAIL; SUITE C-204
PALM BEACH GARDENS, FL 33410
PHONE: 561-775-4902 FAX: 561-775-4903

CERTIFICATION
AUG 12 2005
WARREN W. SCHAEFER, P.E.
P.E. NO. 44135

DRAWING NO. 1223
REV. A
SHEET NO. 3 OF 8

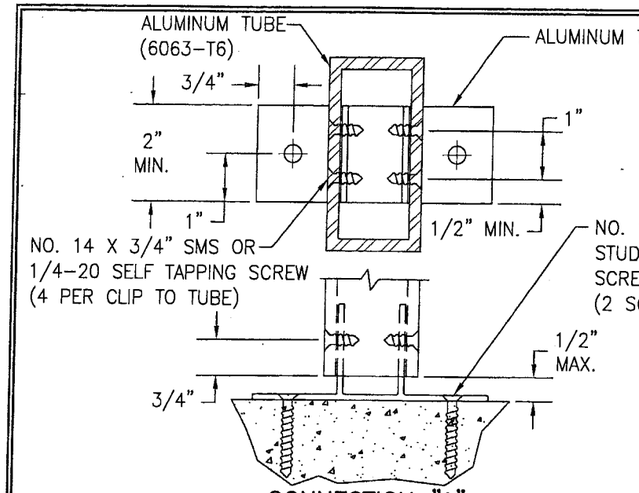

CONNECTION "A"
(INTO BLOCK/CONCRETE OR METAL STUD)

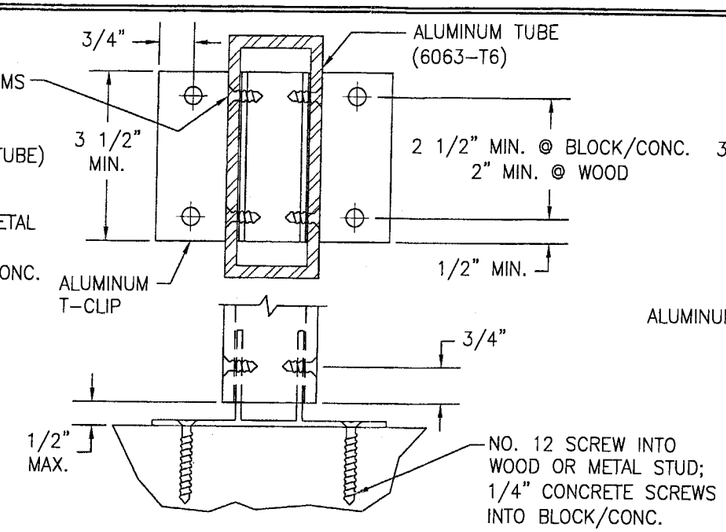

CONNECTION "B & "C"
(INTO WOOD, METAL STUD, BLOCK OR CONCRETE)
"B" = INTO WOOD OR METAL STUD
"C" = INTO BLOCK/CONCRETE

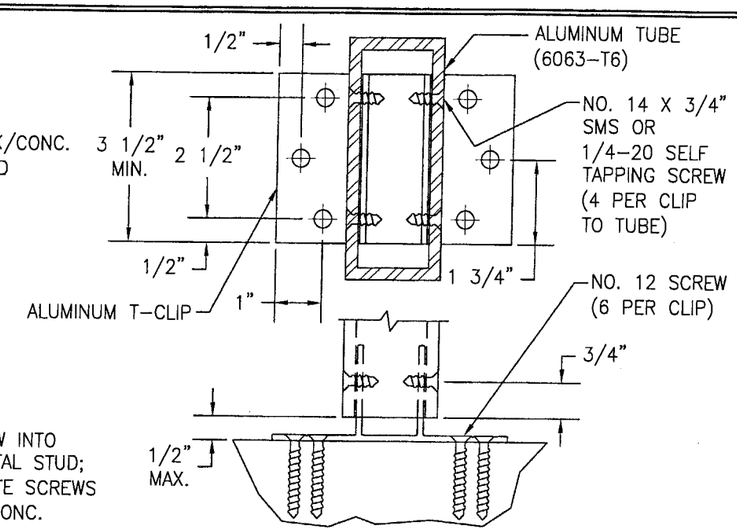

CONNECTION "D"
(INTO WOOD OR METAL STUD)

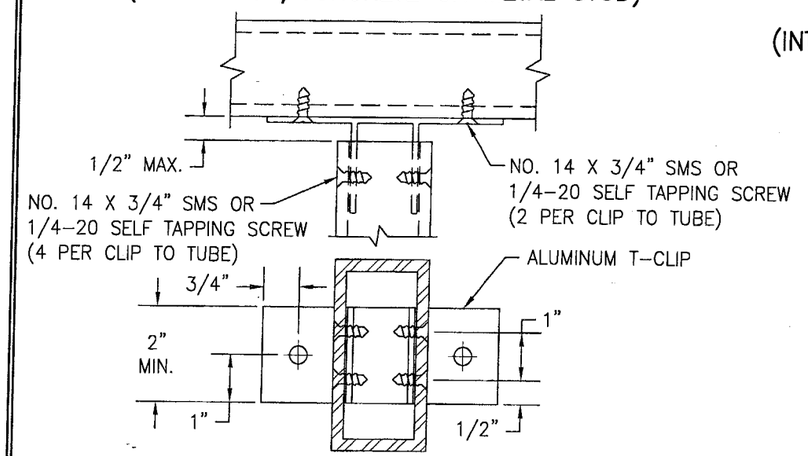

TYP. TUBE TO TUBE CONNECTION
(CONSIDER EQUIVALENT TO CONNECTION "A")

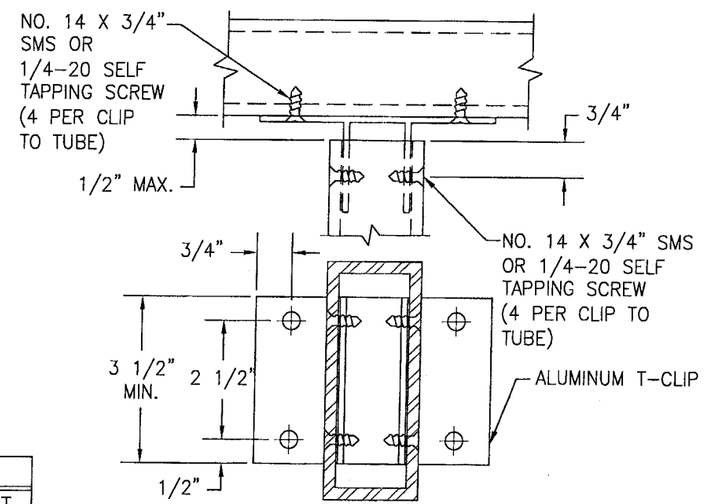

TYP. TUBE TO TUBE CONNECTION
(CONSIDER EQUIVALENT TO OR STRONGER THAN ALL CONNECTIONS)

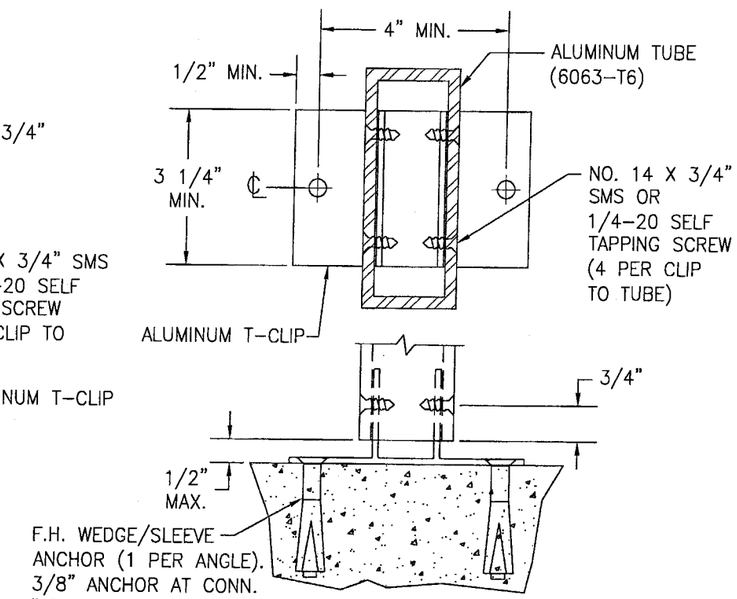

CONNECTION "E" & "F"
(INTO CONCRETE OR CONCRETE FILLED BLOCK)
"E" = 3/8" ANCHOR
"F" = 1/2" ANCHOR

ANCHOR REQUIREMENTS

(3) ANCHOR	SUBSTRATE	MIN. EMBED	MIN. EDGE DIST.
NO. 12 SMS	(4) WOOD	1 3/8"	3/4"
NO. 12 TEK SCREW	(6) MIN. 18 GA. METAL STUD	FULL	1/2"
(1) 1/4" CONCRETE SCREW	(5) BLOCK/CONCRETE	1 1/4"	2 1/4"
(2) 3/8" WEDGE/SLEEVE ANCHOR	(5) BLOCK OR CONCRETE	2"	2 1/4"
(2) 1/2" WEDGE/SLEEVE ANCHOR	CONCRETE FILLED BLOCK OR CONCRETE	2 1/2"	3"

(1) CONCRETE SCREWS MAY BE ELCO TAPCONS OR HILTI KWIK-CON II'S.
(2) WEDGE/SLEEVE ANCHORS MAY BE RAMSET RED HEAD DYNABOLTS OR POWERS RAWL POWER BOLT.
(3) IN COASTAL AREAS, ALL MULLION ANCHORS TO SUBSTRATE MUST BE STAINLESS STEEL.
(4) WOOD = MIN. NO. 3 GRADE SOUTHERN PINE (G = 0.55)
(5) CONCRETE = MIN. 2500 PSI.
(6) METAL STUD = MIN. 18 GA. Fy = 33,000 PSI.

MULLION END CONNECTION DETAILS USING T-CLIPS

PROD[illegible] as complying with the Florida Building Code
Acceptance No. OS-0824.04
Expiration Date 10/30/08
By [illegible]
Miami-Dade Product Control Division

NO.	REVISION DESCRIPTION	BY	DATE
A2	UPDATE ANCHOR REQUIREMENTS	K.P.S.	08/12/05
	EDGE DISTANCE & NOTES		
A3	UPDATE CONN. "E" & "F" DIMS.	K.P.S.	08/12/05

DRAWN BY: K.P.S. | CHECKED BY: W.W.S.
PLOT: 1=3 | DATE: 05/07/03

DRAWING TITLE: ALUMINUM TUBE CLIPPED MULLIONS

MANUFACTURER: MARVIN WINDOWS & DOORS
HIGHWAY 11 WEST
WARROAD, MN 56763-0100
218-386-1430

CONSULTANTS: W. W. SCHAEFER ENGINEERING & CONSULTING, P.A.
8895 N. MILITARY TRAIL; SUITE C-204
PALM BEACH GARDENS, FL 33410
PHONE: 561-775-4902 FAX: 561-775-4903

CERTIFICATION: AUG 02 2005
WARREN W. SCHAEFER, P.E.
P.E. NO. 44135

DRAWING NO. 1223 | REV. A
SHEET NO. 4 OF 8

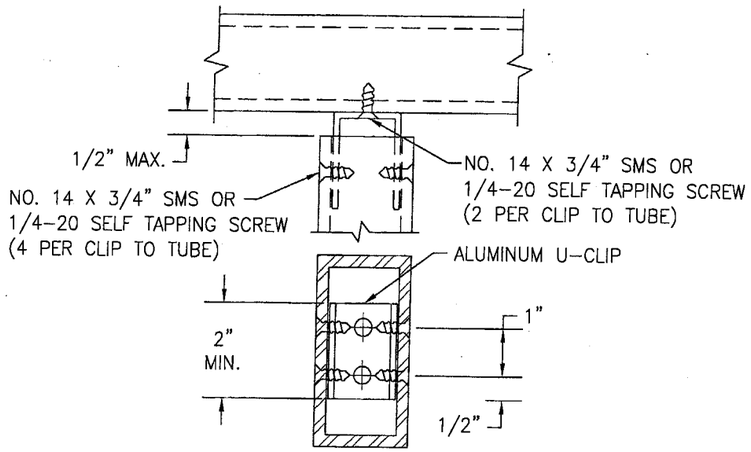

TYP. ALTERNATE TUBE TO TUBE CONNECTION
(CONSIDER EQUIVALENT TO CONNECTION "A")

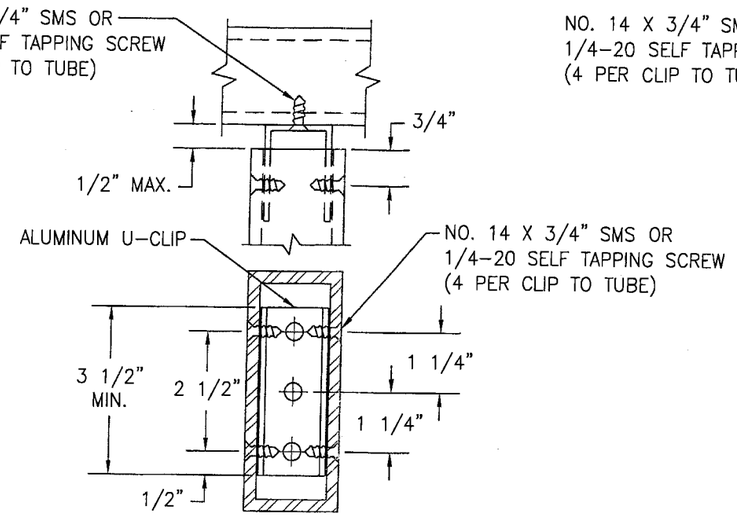

TYP. ALTERNATE TUBE TO TUBE CONNECTION
(CONSIDER EQUIVALENT TO
CONNECTIONS "A" THROUGH "E")

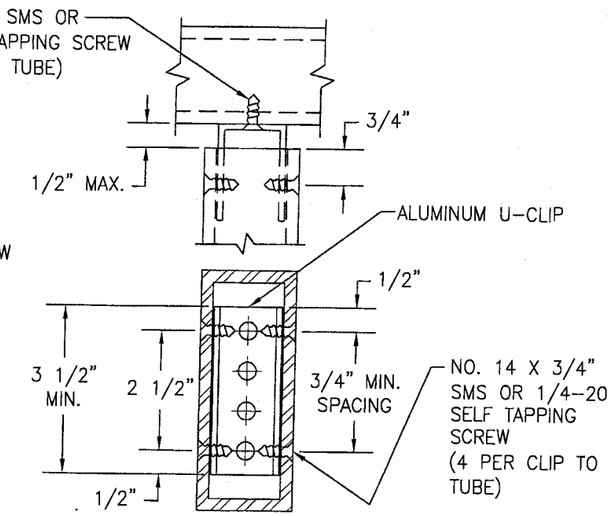

TYP. ALTERNATE TUBE TO TUBE CONNECTION
(CONSIDER EQUIVALENT TO
CONNECTION "F")

ALTERNATE TUBE TO TUBE CONNECTION DETAILS USING U-CLIPS

"L" ANGLES

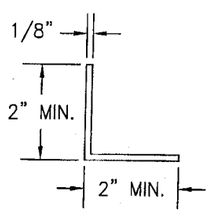

TYPICAL CLIP ANGLE
(6063-T5 ALUMINUM)

"T" & "U" CLIPS

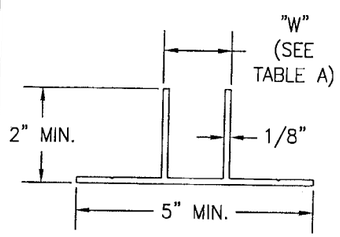

TYPICAL EXTRUDED T-CLIP
(6063-T6 ALUMINUM)

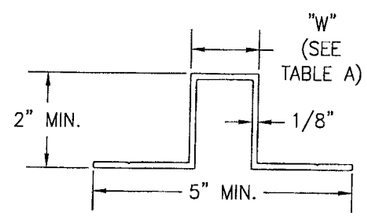

ALTERNATE EXTRUDED
OR BENT T-CLIP
(MAY REPLACE ALL T-CLIPS
SHOWN IN DETAILS)
(6063-T5 ALUMINUM)

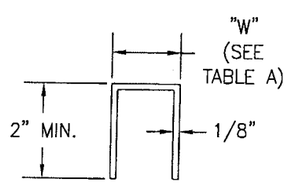

ALTERNATE U-CLIP
(T OR U-CLIP WITH FLANGES REMOVED)
(6063-T5 OR T6 ALUMINUM)

TABLE A	
TUBE TYPE	"W"
1X4X1/8	11/16"
2X4X1/8 & 2X5X1/8	1 11/16"
2X4X1/4 & 2X5X1/4	1 7/16"

MULLION SECTIONS

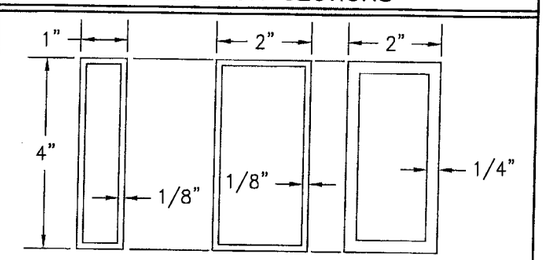

APPLICABLE 4" MULLION TUBES
(6063-T6 ALUMINUM)

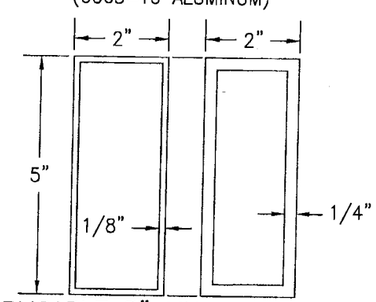

APPLICABLE 5" MULLION TUBES
(6063-T6 ALUMINUM)

PRODUCT REVISED
as complying with the Florida
Building Code
Acceptance No. 05-0824.04
Expiration Date 10/30/08
By
Miami Dade Product Control
Division

DRAWN BY: K.P.S.	CHECKED BY: W.W.S.
PLOT: 1=3	DATE: 05/07/03

NO.	REVISION DESCRIPTION	BY	DATE

DRAWING TITLE
ALUMINUM TUBE CLIPPED MULLIONS

MANUFACTURER
MARVIN WINDOWS & DOORS
HIGHWAY 11 WEST
WARROAD, MN 56763-0100
218-386-1430

CONSULTANTS
W. W. SCHAEFER ENGINEERING & CONSULTING, P.A.
8895 N. MILITARY TRAIL; SUITE C-204
PALM BEACH GARDENS, FL 33410
PHONE: 561-775-4902 FAX: 561-775-4903

CERTIFICATION
AUG 12 2005
WARREN W. SCHAEFER, P.E.
P.E. NO. 44135

DRAWING NO. 1223
REV. A
SHEET NO. 5 OF 8

LOAD TABLE 1.0

MAXIMUM MULLION LENGTH (IN.)	MAXIMUM LOAD WIDTH (IN.)	ALLOWABLE PRESSURE (PSF)								
		4X1X1/8 TUBE	4X2X1/8 TUBE	4X2X1/4 OR 5X2X1/8 TUBE	5X2X1/4 TUBE	CONNECTION TYPES				
						"A"	"B"	"C"	"D" & "E"	"F"
60	54	85.0	85.0	85.0	85.0	85.0	85.0	85.0	85.0	85.0
	60	81.5	85.0	85.0	85.0	85.0	85.0	85.0	85.0	85.0
66	42	85.0	85.0	85.0	85.0	85.0	85.0	85.0	85.0	85.0
	48	84.2	85.0	85.0	85.0	85.0	85.0	85.0	85.0	85.0
	54	74.9	85.0	85.0	85.0	85.0	85.0	85.0	85.0	85.0
	60	67.4	85.0	85.0	85.0	84.4	85.0	85.0	85.0	85.0
	66	61.2	85.0	85.0	85.0	83.7	85.0	85.0	85.0	85.0
72	36	85.0	85.0	85.0	85.0	85.0	85.0	85.0	85.0	85.0
	42	80.6	85.0	85.0	85.0	85.0	85.0	85.0	85.0	85.0
	48	70.6	85.0	85.0	85.0	79.1	85.0	85.0	85.0	85.0
	54	62.7	85.0	85.0	85.0	75.0	85.0	85.0	85.0	85.0
	60	56.4	82.5	85.0	85.0	72.3	85.0	85.0	85.0	85.0
	66	51.3	75.0	85.0	85.0	70.8	85.0	85.0	85.0	85.0
	72	47.0	68.7	85.0	85.0	70.3	85.0	85.0	85.0	85.0
78	30	85.0	85.0	85.0	85.0	85.0	85.0	85.0	85.0	85.0
	36	74.0	85.0	85.0	85.0	84.4	85.0	85.0	85.0	85.0
	42	63.4	85.0	85.0	85.0	76.2	85.0	85.0	85.0	85.0
	48	55.5	81.1	85.0	85.0	70.3	85.0	85.0	85.0	85.0
	54	49.3	72.1	85.0	85.0	66.2	80.4	85.0	85.0	85.0
	60	44.4	64.9	85.0	85.0	63.3	76.9	85.0	85.0	85.0
	66	40.4	59.0	85.0	85.0	61.4	74.6	85.0	85.0	85.0
	72	37.0	54.0	82.1	85.0	60.3	73.2	85.0	85.0	85.0
84	24	85.0	85.0	85.0	85.0	85.0	85.0	85.0	85.0	85.0
	30	71.1	85.0	85.0	85.0	85.0	85.0	85.0	85.0	85.0
	36	59.2	85.0	85.0	85.0	76.7	85.0	85.0	85.0	85.0
	42	50.8	74.2	85.0	85.0	68.9	83.7	85.0	85.0	85.0
	48	44.4	64.9	85.0	85.0	63.3	76.9	85.0	85.0	85.0
	54	39.5	57.7	85.0	85.0	59.2	72.0	85.0	85.0	85.0
	60	35.5	51.9	85.0	85.0	56.3	68.4	85.0	85.0	85.0
	66	32.3	47.2	77.3	85.0	54.2	65.8	85.0	85.0	85.0
	72	29.6	43.3	70.8	85.0	52.8	64.1	85.0	85.0	85.0
90	18	85.0	85.0	85.0	85.0	85.0	85.0	85.0	85.0	85.0
	24	72.2	85.0	85.0	85.0	85.0	85.0	85.0	85.0	85.0
	30	57.8	84.4	85.0	85.0	81.0	85.0	85.0	85.0	85.0
	36	48.2	70.4	85.0	85.0	70.3	85.0	85.0	85.0	85.0
	42	41.3	60.3	85.0	85.0	62.9	76.4	85.0	85.0	85.0
	48	36.1	52.8	85.0	85.0	57.5	69.9	85.0	85.0	85.0
	54	32.1	46.9	82.0	85.0	53.6	65.1	85.0	85.0	85.0
	60	28.9	42.2	73.8	85.0	50.6	61.5	85.0	85.0	85.0
	66	26.3	38.4	67.1	85.0	48.5	58.9	85.0	85.0	85.0
	72	–	35.2	61.5	85.0	46.9	57.0	82.5	85.0	85.0

INSTRUCTIONS FOR TABLE USE:

1. DETERMINE REQUIRED WIND PRESSURE FOR THE OPENING.
2. DETERMINE THE MULLION LENGTH & LOAD WIDTH USING THE APPLICABLE ELEVATION ON SHEETS 1 & 2.
3. CHOOSE A TUBE SIZE THAT MEETS OR EXCEEDS THE REQUIRED PRESSURE FOR THE APPLICABLE MULLION LENGTH & LOAD WIDTH CONDITIONS.
4. CHOOSE A CONNECTION TYPE THAT MEETS OR EXCEEDS THE REQUIRED PRESSURE FOR THE APPLICABLE MULLION LENGTH & LOAD WIDTH CONDITIONS.

LOAD TABLE 1.0 (CONT.)

MAXIMUM MULLION LENGTH (IN.)	MAXIMUM LOAD WIDTH (IN.)	ALLOWABLE PRESSURE (PSF)								
		4X1X1/8 TUBE	4X2X1/8 TUBE	4X2X1/4 OR 5X2X1/8 TUBE	5X2X1/4 TUBE	CONNECTION TYPES				
						"A"	"B"	"C"	"D" & "E"	"F"
96	18	79.4	85.0	85.0	85.0	85.0	85.0	85.0	85.0	85.0
	24	59.5	85.0	85.0	85.0	85.0	85.0	85.0	85.0	85.0
	30	47.6	69.6	85.0	85.0	75.0	85.0	85.0	85.0	85.0
	36	39.7	58.0	85.0	85.0	64.9	78.9	85.0	85.0	85.0
	42	34.0	49.7	85.0	85.0	57.9	70.3	85.0	85.0	85.0
	48	29.8	43.5	76.0	85.0	52.8	64.1	85.0	85.0	85.0
	54	26.5	38.7	67.6	85.0	48.9	59.4	85.0	85.0	85.0
	60	–	34.8	60.8	85.0	46.0	55.9	81.0	83.9	85.0
	66	–	31.6	55.3	85.0	43.8	53.3	77.2	79.9	85.0
	72	–	29.0	50.7	85.0	42.2	51.3	74.3	76.9	85.0
102	18	66.2	85.0	85.0	85.0	85.0	85.0	85.0	85.0	85.0
	24	49.6	72.5	85.0	85.0	84.4	85.0	85.0	85.0	85.0
	30	39.7	58.0	85.0	85.0	69.8	84.9	85.0	85.0	85.0
	36	33.1	48.3	84.5	85.0	60.3	73.2	85.0	85.0	85.0
	42	28.4	41.4	72.5	85.0	53.6	65.1	85.0	85.0	85.0
	48	24.8	36.3	63.4	85.0	48.7	59.2	85.0	85.0	85.0
	54	–	32.2	56.4	85.0	45.0	54.7	79.2	82.1	85.0
	60	–	29.0	50.7	85.0	42.2	51.3	74.3	76.9	85.0
	66	–	26.4	46.1	83.7	40.0	48.6	70.5	73.0	84.3
	72	–	–	42.3	76.7	38.4	46.6	67.5	69.9	80.8
108	18	55.7	81.4	85.0	85.0	85.0	85.0	85.0	85.0	85.0
	24	41.8	61.1	85.0	85.0	79.1	85.0	85.0	85.0	85.0
	30	33.4	48.9	85.0	85.0	65.3	79.4	85.0	85.0	85.0
	36	27.9	40.7	71.2	85.0	56.3	68.4	85.0	85.0	85.0
	42	–	34.9	61.0	85.0	49.9	60.6	85.0	85.0	85.0
	48	–	30.5	53.4	85.0	45.2	54.9	79.6	82.4	85.0
	54	–	27.1	47.5	85.0	41.7	50.6	73.3	76.0	85.0
	60	–	–	42.7	77.5	39.0	47.3	68.6	71.0	82.0
	66	–	–	38.8	70.5	36.8	44.7	64.8	67.1	77.6
	72	–	–	35.6	64.6	35.2	42.7	61.9	64.1	74.1
120	18	40.6	59.4	85.0	85.0	85.0	85.0	85.0	85.0	85.0
	24	30.5	44.5	77.9	85.0	70.3	85.0	85.0	85.0	85.0
	30	24.4	35.6	62.3	85.0	57.9	70.3	85.0	85.0	85.0
	36	–	29.7	51.9	85.0	49.6	60.3	85.0	85.0	85.0
	42	–	25.4	44.5	80.7	43.8	53.3	77.2	79.9	85.0
	48	–	–	38.9	70.6	39.6	48.1	69.6	72.1	83.3
	54	–	–	34.6	62.8	36.3	44.1	63.9	66.2	76.4
	60	–	–	31.1	56.5	33.8	41.0	59.4	61.5	71.1
	66	–	–	28.3	51.4	31.7	38.6	55.9	57.9	66.9
	72	–	–	26.0	47.1	30.1	36.6	53.0	55.0	63.5
126	18	–	51.3	85.0	85.0	85.0	85.0	85.0	85.0	85.0
	24	–	38.5	67.3	85.0	66.6	80.9	85.0	85.0	85.0
	30	–	30.8	53.8	85.0	54.7	66.5	85.0	85.0	85.0
	36	–	25.6	44.8	81.4	46.9	57.0	82.5	85.0	85.0
	42	–	–	38.4	69.7	41.3	50.2	72.8	75.4	85.0
	48	–	–	33.6	61.0	37.2	45.2	65.5	67.9	78.4
	54	–	–	29.9	54.2	34.1	41.4	60.0	62.2	71.8
	60	–	–	26.9	48.8	31.7	38.5	55.7	57.7	66.7
	66			24.5	44.4	29.7	36.1	52.3	54.1	62.5

TABLE NOTES:

1. ALL TUBES SHALL BE MIN. 6063-T6 PRE-PAINTED ALUMINUM.
2. FOR ALL CONNECTION TYPES, SEE SHEETS 3, 4 & 5 FOR DETAIL.
3. INDIVIDUAL UNIT SIZES & SHUTTER REQUIREMENTS ARE LIMITED BY THEIR OWN INDIVIDUAL "CERTIFICATION".
4. IN ORDER TO SIMPLIFY TABLES, TABLE PRESSURES ARE LIMITED TO 85 PSF.

PRODUCT REVISED
as complying with the Florida Building Code
Acceptance No. 05-0324.04
Expiration Date 10/30/05
By
Miami Dade Product Control Division

DRAWN BY: K.P.S.	CHECKED BY: W.W.S.
PLOT: 1=1	DATE: 05/07/03

NO.	REVISION DESCRIPTION	BY	DATE
A4	REVISED CONN. "F" LOADS	K.P.S.	08/12/05
A5	DELETED TABLE NOTE 5	K.P.S.	08/12/05

DRAWING TITLE
ALUMINUM TUBE CLIPPED MULLIONS

MANUFACTURER
MARVIN WINDOWS & DOORS
HIGHWAY 11 WEST
WARROAD, MN 56763-0100
218-386-1430

CONSULTANTS
W. W. SCHAEFER ENGINEERING & CONSULTING, P.A.
8895 N. MILITARY TRAIL, SUITE C-204
PALM BEACH GARDENS, FL 33410
PHONE: 561-775-4902 FAX: 561-775-4903

CERTIFICATION
AUG 12 2005
WARREN W. SCHAEFER, P.E.
P.E. NO. 44135

DRAWING NO. 1223 REV. A

SHEET NO. 6 OF 8

LOAD TABLE 2.0

MAXIMUM MULLION LENGTH (IN.)	MAXIMUM LOAD WIDTH (IN.)	ALLOWABLE PRESSURE (PSF)								
		4X1X1/8 TUBE	4X2X1/8 TUBE	4X2X1/4 OR 5X2X1/8 TUBE	5X2X1/4 TUBE	CONNECTION TYPES				
						"A"	"B"	"C"	"D" & "E"	"F"
42	72	85.0	85.0	85.0	85.0	85.0	85.0	85.0	85.0	85.0
48	60	85.0	85.0	85.0	85.0	85.0	85.0	85.0	85.0	85.0
	66	85.0	85.0	85.0	85.0	82.2	85.0	85.0	85.0	85.0
	72	85.0	85.0	85.0	85.0	75.4	85.0	85.0	85.0	85.0
54	54	85.0	85.0	85.0	85.0	85.0	85.0	85.0	85.0	85.0
	60	85.0	85.0	85.0	85.0	80.4	85.0	85.0	85.0	85.0
	66	85.0	85.0	85.0	85.0	73.1	85.0	85.0	85.0	85.0
	72	83.9	85.0	85.0	85.0	67.0	81.4	85.0	85.0	85.0
	78	77.4	85.0	85.0	85.0	61.8	75.1	85.0	85.0	85.0
	84	71.9	85.0	85.0	85.0	57.4	69.8	85.0	85.0	85.0
60	48	85.0	85.0	85.0	85.0	85.0	85.0	85.0	85.0	85.0
	54	85.0	85.0	85.0	85.0	80.4	85.0	85.0	85.0	85.0
	60	81.5	85.0	85.0	85.0	72.3	85.0	85.0	85.0	85.0
	66	74.1	85.0	85.0	85.0	65.8	79.9	85.0	85.0	85.0
	72	67.9	85.0	85.0	85.0	60.3	73.2	85.0	85.0	85.0
	78	62.7	85.0	85.0	85.0	55.6	67.6	85.0	85.0	85.0
	84	58.2	85.0	85.0	85.0	51.7	62.8	85.0	85.0	85.0
	90	54.3	79.4	85.0	85.0	48.2	58.6	84.9	85.0	85.0
66	42	85.0	85.0	85.0	85.0	85.0	85.0	85.0	85.0	85.0
	48	84.2	85.0	85.0	85.0	82.2	85.0	85.0	85.0	85.0
	54	74.9	85.0	85.0	85.0	73.1	85.0	85.0	85.0	85.0
	60	67.4	85.0	85.0	85.0	65.8	79.9	85.0	85.0	85.0
	66	61.2	85.0	85.0	85.0	59.8	72.6	85.0	85.0	85.0
	72	56.1	82.0	85.0	85.0	54.8	66.6	85.0	85.0	85.0
	78	51.8	75.7	85.0	85.0	50.6	61.5	85.0	85.0	85.0
	84	48.1	70.3	85.0	85.0	47.0	57.1	82.7	85.0	85.0
	90	44.9	65.6	85.0	85.0	43.8	53.3	77.2	79.9	85.0
72	36	85.0	85.0	85.0	85.0	85.0	85.0	85.0	85.0	85.0
	42	80.6	85.0	85.0	85.0	85.0	85.0	85.0	85.0	85.0
	48	70.6	85.0	85.0	85.0	75.4	85.0	85.0	85.0	85.0
	54	62.7	85.0	85.0	85.0	67.0	81.4	85.0	85.0	85.0
	60	56.4	82.5	85.0	85.0	60.3	73.2	85.0	85.0	85.0
	66	51.3	75.0	85.0	85.0	54.8	66.6	85.0	85.0	85.0
	72	47.0	68.7	85.0	85.0	50.2	61.0	85.0	85.0	85.0
	78	43.4	63.4	85.0	85.0	46.4	56.3	81.6	84.5	85.0
	84	40.3	58.9	82.6	85.0	43.1	52.3	75.8	78.5	85.0
	90	37.6	55.0	77.1	85.0	40.2	48.8	70.7	73.3	85.0
78	36	74.0	85.0	85.0	85.0	85.0	85.0	85.0	85.0	85.0
	42	63.4	85.0	85.0	85.0	79.5	85.0	85.0	85.0	85.0
	48	55.5	81.1	85.0	85.0	69.6	84.5	85.0	85.0	85.0
	54	49.3	72.1	85.0	85.0	61.8	75.1	85.0	85.0	85.0
	60	44.4	64.9	85.0	85.0	55.6	67.6	85.0	85.0	85.0
	66	40.4	59.0	85.0	85.0	50.6	61.5	85.0	85.0	85.0
	72	37.0	54.0	82.1	85.0	46.4	56.3	81.6	84.5	85.0
	78	34.1	49.9	75.8	85.0	42.8	52.0	75.3	78.0	85.0
	84	31.7	46.3	70.4	85.0	39.7	48.3	70.0	72.5	83.7
	90	29.6	43.2	65.7	85.0	37.1	45.1	65.3	67.6	78.1

TABLE NOTES:

1. ALL TUBES SHALL BE MIN. 6063-T6 PRE-PAINTED ALUMINUM.
2. FOR ALL CONNECTION TYPES, SEE SHEETS 3, 4 & 5 FOR DETAIL.
3. INDIVIDUAL UNIT SIZES & SHUTTER REQUIREMENTS ARE LIMITED BY THEIR OWN INDIVIDUAL "CERTIFICATION".
4. IN ORDER TO SIMPLIFY TABLES, TABLE PRESSURES ARE LIMITED TO 85 PSF.

LOAD TABLE 2.0 (CONT.)

MAXIMUM MULLION LENGTH (IN.)	MAXIMUM LOAD WIDTH (IN.)	ALLOWABLE PRESSURE (PSF)								
		4X1X1/8 TUBE	4X2X1/8 TUBE	4X2X1/4 OR 5X2X1/8 TUBE	5X2X1/4 TUBE	CONNECTION TYPES				
						"A"	"B"	"C"	"D" & "E"	"F"
84	36	59.2	85.0	85.0	85.0	85.0	85.0	85.0	85.0	85.0
	42	50.8	74.2	85.0	85.0	73.8	85.0	85.0	85.0	85.0
	48	44.4	64.9	85.0	85.0	64.6	78.5	85.0	85.0	85.0
	54	39.5	57.7	85.0	85.0	57.4	69.8	85.0	85.0	85.0
	60	35.5	51.9	85.0	85.0	51.7	62.8	85.0	85.0	85.0
	66	32.3	47.2	77.3	85.0	47.0	57.1	82.7	85.0	85.0
	72	29.6	43.3	70.8	85.0	43.1	52.3	75.8	78.5	85.0
	78	27.3	39.9	65.4	85.0	39.7	48.3	70.0	72.5	83.7
	84	–	37.1	60.7	85.0	36.9	44.8	65.0	67.3	77.7
	90	–	34.6	56.7	85.0	34.4	41.9	60.6	62.8	72.5
90	42	41.3	60.3	85.0	85.0	68.9	83.7	85.0	85.0	85.0
	48	36.1	52.8	85.0	85.0	60.3	73.2	85.0	85.0	85.0
	54	32.1	46.9	82.0	85.0	53.6	65.1	85.0	85.0	85.0
	60	28.9	42.2	73.8	85.0	48.2	58.6	84.9	85.0	85.0
	66	26.3	38.4	67.1	85.0	43.8	53.3	77.2	79.9	85.0
	72	–	35.2	61.5	85.0	40.2	48.8	70.7	73.3	84.6
	78	–	32.5	56.8	85.0	37.1	45.1	65.3	67.6	78.1
	84	–	30.2	52.7	85.0	34.4	41.9	60.6	62.8	72.5
	90	–	28.1	49.2	85.0	32.2	39.1	56.6	58.6	67.7
96	42	34.0	49.7	85.0	85.0	64.6	78.5	85.0	85.0	85.0
	48	29.8	43.5	76.0	85.0	56.5	68.7	85.0	85.0	85.0
	54	26.5	38.7	67.6	85.0	50.2	61.0	85.0	85.0	85.0
	60	–	34.8	60.8	85.0	45.2	54.9	79.6	82.4	85.0
	66	–	31.6	55.3	85.0	41.1	49.9	72.3	74.9	85.0
	72	–	29.0	50.7	85.0	37.7	45.8	66.3	68.7	79.3
	78	–	26.8	46.8	84.9	34.8	42.3	61.2	63.4	73.2
	84	–	–	43.5	78.8	32.3	39.2	56.8	58.9	68.0
	90	–	–	40.6	73.6	30.1	36.6	53.0	55.0	63.5
102	42	28.4	41.4	72.5	85.0	60.8	73.9	85.0	85.0	85.0
	48	24.8	36.3	63.4	85.0	53.2	64.6	85.0	85.0	85.0
	54	–	32.2	56.4	85.0	47.3	57.4	83.2	85.0	85.0
	60	–	29.0	50.7	85.0	42.6	51.7	74.9	77.6	85.0
	66	–	26.4	46.1	83.7	38.7	47.0	68.1	70.5	81.5
	72	–	–	42.3	76.7	35.5	43.1	62.4	64.6	74.7
	78	–	–	39.0	70.8	32.7	39.8	57.6	59.7	68.9
	84	–	–	36.2	65.7	30.4	36.9	53.5	55.4	64.0
	90	–	–	33.8	61.4	28.4	34.5	49.9	51.7	59.7

1. DETERMINE REQUIRED WIND PRESSURE FOR THE OPENING.
2. DETERMINE THE MULLION LENGTH & LOAD WIDTH USING THE APPLICABLE ELEVATION ON SHEETS 1 & 2.
3. CHOOSE A TUBE SIZE THAT MEETS OR EXCEEDS THE REQUIRED PRESSURE FOR THE APPLICABLE MULLION LENGTH & LOAD WIDTH CONDITIONS.
4. CHOOSE A CONNECTION TYPE THAT MEETS OR EXCEEDS THE REQUIRED PRESSURE FOR THE APPLICABLE MULLION LENGTH & LOAD WIDTH CONDITIONS.

PRODUCT REVISED
as complying with the Florida
Building Code
Acceptance No. 05-0824.04
Expiration Date 10/30/08
By
Miami-Dade Product Control
Division

NO.	REVISION DESCRIPTION	BY	DATE
A4	REVISED CONN. "F" LOADS	K.P.S.	08/12/05
A5	DELETED TABLE NOTE 5	K.P.S.	08/12/05

DRAWN BY: K.P.S.
CHECKED BY: W.W.S.
PLOT: 1=1
DATE: 05/07/03

DRAWING TITLE: ALUMINUM TUBE CLIPPED MULLIONS

MANUFACTURER
MARVIN WINDOWS & DOORS
HIGHWAY 11 WEST
WARROAD, MN 56763-0100
218-386-1430

CONSULTANTS
W. W. SCHAEFER ENGINEERING & CONSULTING, P.A.
8895 N. MILITARY TRAIL; SUITE C-204
PALM BEACH GARDENS, FL 33410
PHONE: 561-775-4902 FAX: 561-775-4903

CERTIFICATION
AUG 12 2005
WARREN W. SCHAEFER, P.E.
P.E. NO. 44135

DRAWING NO. 1223
REV. A
SHEET NO. 7 OF 8

LOAD TABLE 3.0

MAXIMUM MULLION LENGTH (IN.)	MAXIMUM LOAD WIDTH (IN.)	ALLOWABLE PRESSURE (PSF)								
		4X1X1/8 TUBE	4X2X1/8 TUBE	4X2X1/4 OR 5X2X1/8 TUBE	5X2X1/4 TUBE	CONNECTION TYPES				
						"A"	"B"	"C"	"D" & "E"	"F"
36	60	85.0	85.0	85.0	85.0	84.4	85.0	85.0	85.0	85.0
	66	85.0	85.0	85.0	85.0	76.7	85.0	85.0	85.0	85.0
	72	85.0	85.0	85.0	85.0	70.3	85.0	85.0	85.0	85.0
42	48	85.0	85.0	85.0	85.0	85.0	85.0	85.0	85.0	85.0
	54	85.0	85.0	85.0	85.0	80.4	85.0	85.0	85.0	85.0
	60	85.0	85.0	85.0	85.0	72.3	85.0	85.0	85.0	85.0
	66	85.0	85.0	85.0	85.0	65.8	79.9	85.0	85.0	85.0
	72	85.0	85.0	85.0	85.0	60.3	73.2	85.0	85.0	85.0
48	42	85.0	85.0	85.0	85.0	85.0	85.0	85.0	85.0	85.0
	48	85.0	85.0	85.0	85.0	79.1	85.0	85.0	85.0	85.0
	54	85.0	85.0	85.0	85.0	70.3	85.0	85.0	85.0	85.0
	60	85.0	85.0	85.0	85.0	63.3	76.9	85.0	85.0	85.0
	66	85.0	85.0	85.0	85.0	57.5	69.9	85.0	85.0	85.0
	72	85.0	85.0	85.0	85.0	52.8	64.1	85.0	85.0	85.0
54	36	85.0	85.0	85.0	85.0	85.0	85.0	85.0	85.0	85.0
	42	85.0	85.0	85.0	85.0	80.4	85.0	85.0	85.0	85.0
	48	85.0	85.0	85.0	85.0	70.3	85.0	85.0	85.0	85.0
	54	85.0	85.0	85.0	85.0	62.5	76.0	85.0	85.0	85.0
	60	85.0	85.0	85.0	85.0	56.3	68.4	85.0	85.0	85.0
	66	85.0	85.0	85.0	85.0	51.2	62.1	85.0	85.0	85.0
	72	83.9	85.0	85.0	85.0	46.9	57.0	82.5	85.0	85.0
60	36	85.0	85.0	85.0	85.0	84.4	85.0	85.0	85.0	85.0
	42	85.0	85.0	85.0	85.0	72.3	85.0	85.0	85.0	85.0
	48	85.0	85.0	85.0	85.0	63.3	76.9	85.0	85.0	85.0
	54	85.0	85.0	85.0	85.0	56.3	68.4	85.0	85.0	85.0
	60	81.5	85.0	85.0	85.0	50.6	61.5	85.0	85.0	85.0
	66	74.1	85.0	85.0	85.0	46.0	55.9	81.0	83.9	85.0
	72	67.9	85.0	85.0	85.0	42.2	51.3	74.3	76.9	85.0
	78	62.7	85.0	85.0	85.0	39.0	47.3	68.6	71.0	82.0
	84	58.2	85.0	85.0	85.0	36.2	43.9	63.7	65.9	76.2
66	30	85.0	85.0	85.0	85.0	85.0	85.0	85.0	85.0	85.0
	36	85.0	85.0	85.0	85.0	76.7	85.0	85.0	85.0	85.0
	42	85.0	85.0	85.0	85.0	65.8	79.9	85.0	85.0	85.0
	48	84.2	85.0	85.0	85.0	57.5	69.9	85.0	85.0	85.0
	54	74.9	85.0	85.0	85.0	51.2	62.1	85.0	85.0	85.0
	60	67.4	85.0	85.0	85.0	46.0	55.9	81.0	83.9	85.0
	66	61.2	85.0	85.0	85.0	41.9	50.8	73.7	76.3	85.0
	72	56.1	82.0	85.0	85.0	38.4	46.6	67.5	69.9	80.8
	78	51.8	75.7	85.0	85.0	35.4	43.0	62.3	64.6	74.6
	84	48.1	70.3	85.0	85.0	32.9	39.9	57.9	59.9	69.2
72	30	85.0	85.0	85.0	85.0	84.4	85.0	85.0	85.0	85.0
	36	85.0	85.0	85.0	85.0	70.3	85.0	85.0	85.0	85.0
	42	80.6	85.0	85.0	85.0	60.3	73.2	85.0	85.0	85.0
	48	70.6	85.0	85.0	85.0	52.8	64.1	85.0	85.0	85.0
	54	62.7	85.0	85.0	85.0	46.9	57.0	82.5	85.0	85.0
	60	56.4	82.5	85.0	85.0	42.2	51.3	74.3	76.9	85.0
	66	51.3	75.0	85.0	85.0	38.4	46.6	67.5	69.9	80.8
	72	47.0	68.7	85.0	85.0	35.2	42.7	61.9	64.1	74.1
	78	43.4	63.4	85.0	85.0	32.5	39.4	57.1	59.2	68.4
	84	40.3	58.9	82.6	85.0	30.1	36.6	53.0	55.0	63.5
	90	37.6	55.0	77.1	85.0	28.1	34.2	49.5	51.3	59.2
78	30	85.0	85.0	85.0	85.0	77.9	85.0	85.0	85.0	85.0
	36	74.0	85.0	85.0	85.0	64.9	78.9	85.0	85.0	85.0
	42	63.4	85.0	85.0	85.0	55.6	67.6	85.0	85.0	85.0
	48	55.5	81.1	85.0	85.0	48.7	59.2	85.0	85.0	85.0
	54	49.3	72.1	85.0	85.0	43.3	52.6	76.2	78.9	85.0
	60	44.4	64.9	85.0	85.0	39.0	47.3	68.6	71.0	82.0
	66	40.4	59.0	85.0	85.0	35.4	43.0	62.3	64.6	74.6
	72	37.0	54.0	82.1	85.0	32.5	39.4	57.1	59.2	68.4
	78	34.1	49.9	75.8	85.0	30.0	36.4	52.7	54.6	63.1
	84	31.7	46.3	70.4	85.0	27.8	33.8	49.0	50.7	58.6
	90	29.6	43.2	65.7	85.0	26.0	31.5	45.7	47.3	54.7
84	30	71.1	85.0	85.0	85.0	72.3	85.0	85.0	85.0	85.0
	36	59.2	85.0	85.0	85.0	60.3	73.2	85.0	85.0	85.0
	42	50.8	74.2	85.0	85.0	51.7	62.8	85.0	85.0	85.0
	48	44.4	64.9	85.0	85.0	45.2	54.9	79.6	82.4	85.0
	54	39.5	57.7	85.0	85.0	40.2	48.8	70.7	73.3	84.6
	60	35.5	51.9	85.0	85.0	36.2	43.9	63.7	65.9	76.2
	66	32.3	47.2	77.3	85.0	32.9	39.9	57.9	59.9	69.2
	72	29.6	43.3	70.8	85.0	30.1	36.6	53.0	55.0	63.5
	78	27.3	39.9	65.4	85.0	27.8	33.8	49.0	50.7	58.6
	84	–	37.1	60.7	85.0	25.8	31.4	45.5	47.1	54.4
	90	–	34.6	56.7	85.0	24.1	29.3	42.4	44.0	50.8

LOAD TABLE 3.0

MAXIMUM MULLION LENGTH (IN.)	MAXIMUM LOAD WIDTH (IN.) A+B	ALLOWABLE PRESSURE (PSF)								
		4X1X1/8 TUBE	4X2X1/8 TUBE	4X2X1/4 OR 5X2X1/8 TUBE	5X2X1/4 TUBE	CONNECTION TYPES				
						"A"	"B"	"C"	"D" & "E"	"F"
90	30	57.8	84.4	85.0	85.0	67.5	82.0	85.0	85.0	85.0
	36	48.2	70.4	85.0	85.0	56.3	68.4	85.0	85.0	85.0
	42	41.3	60.3	85.0	85.0	48.2	58.6	84.9	85.0	85.0
	48	36.1	52.8	85.0	85.0	42.2	51.3	74.3	76.9	85.0
	54	32.1	46.9	82.0	85.0	37.5	45.6	66.0	68.4	79.0
	60	28.9	42.2	73.8	85.0	33.8	41.0	59.4	61.5	71.1
	66	26.3	38.4	67.1	85.0	30.7	37.3	54.0	56.0	64.6
	72	–	35.2	61.5	85.0	28.1	34.2	49.5	51.3	59.2
	78	–	32.5	56.8	85.0	26.0	31.5	45.7	47.3	54.7
	84	–	30.2	52.7	85.0	24.1	29.3	42.4	44.0	50.8
	90	–	28.1	49.2	85.0	22.5	27.3	39.6	41.0	47.4
96	30	47.6	69.6	85.0	85.0	63.3	76.9	85.0	85.0	85.0
	36	39.7	58.0	85.0	85.0	52.8	64.1	85.0	85.0	85.0
	42	34.0	49.7	85.0	85.0	45.2	54.9	79.6	82.4	85.0
	48	29.8	43.5	76.0	85.0	39.6	48.1	69.6	72.1	83.3
	54	26.5	38.7	67.6	85.0	35.2	42.7	61.9	64.1	74.1
	60	–	34.8	60.8	85.0	31.7	38.5	55.7	57.7	66.7
	66	–	31.6	55.3	85.0	28.8	35.0	50.6	52.5	60.6
	72	–	29.0	50.7	85.0	26.4	32.0	46.4	48.1	55.5
	78	–	–	46.8	84.9	24.3	29.6	42.8	44.4	51.3
	84	–	–	43.5	78.8	22.6	27.5	39.8	41.2	47.6
	90	–	–	40.6	73.6	21.1	25.6	37.1	38.5	44.4
108	30	33.4	48.9	85.0	85.0	56.3	68.4	85.0	85.0	85.0
	36	27.9	40.7	71.2	85.0	46.9	57.0	82.5	85.0	85.0
	42	–	34.9	61.0	85.0	40.2	48.8	70.7	73.3	84.6
	48	–	30.5	53.4	85.0	35.2	42.7	61.9	64.1	74.1
	54	–	27.1	47.5	85.0	31.3	38.0	55.0	57.0	65.8
	60	–	–	42.7	77.5	28.1	34.2	49.5	51.3	59.2
	66	–	–	38.8	70.5	25.6	31.1	45.0	46.6	53.9
	72	–	–	35.6	64.6	23.4	28.5	41.3	42.7	49.4
	78	–	–	32.9	59.6	21.6	26.3	38.1	39.5	45.6
	84	–	–	30.5	55.4	20.1	24.4	35.4	36.6	42.3
	90	–	–	28.5	51.7	18.8	22.8	33.0	34.2	39.5
120	30	–	35.6	62.3	85.0	50.6	61.5	85.0	85.0	85.0
	36	–	29.7	51.9	85.0	42.2	51.3	74.3	76.9	85.0
	42	–	25.4	44.5	80.7	36.2	43.9	63.7	65.9	76.2
	48	–	–	38.9	70.6	31.7	38.5	55.7	57.7	66.7
	54	–	–	34.6	62.8	28.1	34.2	49.5	51.3	59.2
	60	–	–	31.1	56.5	25.3	30.8	44.6	46.2	53.3
	66	–	–	28.3	51.4	23.0	28.0	40.5	42.0	48.5
	72	–	–	–	47.1	21.1	25.6	37.1	38.5	44.4
	78	–	–	–	43.5	19.5	23.7	34.3	35.5	41.0
	84	–	–	–	40.4	18.1	22.0	31.8	33.0	38.1
	90	–	–	–	37.7	16.9	20.5	29.7	30.8	35.5
132	30	–	–	46.8	84.9	46.0	55.9	81.0	83.9	85.0
	36	–	–	39.0	70.8	38.4	46.6	67.5	69.9	80.8
	42	–	–	33.4	60.7	32.9	39.9	57.9	59.9	69.2
	48	–	–	29.3	53.1	28.8	35.0	50.6	52.5	60.6
	54	–	–	–	47.2	25.6	31.1	45.0	46.6	53.9
	60	–	–	–	42.5	23.0	28.0	40.5	42.0	48.5
	66	–	–	–	38.6	20.9	25.4	36.8	38.1	44.1
	72	–	–	–	35.4	19.2	23.3	33.8	35.0	40.4
	78	–	–	–	32.7	17.7	21.5	31.2	32.3	37.3
	84	–	–	–	30.3	16.4	20.0	28.9	30.0	34.6
	90	–	–	–	28.3	15.3	18.6	27.0	28.0	32.3
144	30	–	–	36.0	65.4	42.2	51.3	74.3	76.9	85.0
	36	–	–	30.0	54.5	35.2	42.7	61.9	64.1	74.1
	42	–	–	25.7	46.7	30.1	36.6	53.0	55.0	63.5
	48	–	–	–	40.9	26.4	32.0	46.4	48.1	55.5
	54	–	–	–	36.3	23.4	28.5	41.3	42.7	49.4
	60	–	–	–	32.7	21.1	25.6	37.1	38.5	44.4
	66	–	–	–	29.7	19.2	23.3	33.8	35.0	40.4
152	30	–	–	–	55.6	40.0	48.6	70.4	48.6	84.2
	36	–	–	–	46.3	33.3	40.5	58.6	40.5	70.2
	42	–	–	–	39.7	28.6	34.7	50.3	34.7	60.1
	48	–	–	–	34.8	25.0	30.4	44.0	30.4	52.6
	54	–	–	–	30.9	22.2	27.0	39.1	27.0	46.8
164	30	–	–	–	44.3	37.1	45.0	65.2	45.0	78.0
	36	–	–	–	36.9	30.9	37.5	54.3	37.5	65.0
	42	–	–	–	31.6	26.5	32.2	46.6	32.2	55.7
	48	–	–	–	27.7	23.2	28.1	40.8	28.1	48.8

TABLE NOTES:

1. ALL TUBES SHALL BE MIN. 6063-T6 PRE-PAINTED ALUMINUM.
2. FOR ALL CONNECTION TYPES, SEE SHEETS 3, 4 & 5 FOR DETAIL.
3. INDIVIDUAL UNIT SIZES & SHUTTER REQUIREMENTS ARE LIMITED BY THEIR OWN INDIVIDUAL "CERTIFICATION".
4. IN ORDER TO SIMPLIFY TABLES, TABLE PRESSURES ARE LIMITED TO 85 PSF.

INSTRUCTIONS FOR TABLE USE:

1. DETERMINE REQUIRED WIND PRESSURE FOR THE OPENING.
2. DETERMINE THE MULLION LENGTH & LOAD WIDTH USING THE APPLICABLE ELEVATION ON SHEETS 1 & 2.
3. CHOOSE A TUBE SIZE THAT MEETS OR EXCEEDS THE REQUIRED PRESSURE FOR THE APPLICABLE MULLION LENGTH & LOAD WIDTH CONDITIONS.
4. CHOOSE A CONNECTION TYPE THAT MEETS OR EXCEEDS THE REQUIRED PRESSURE FOR THE APPLICABLE MULLION LENGTH & LOAD WIDTH CONDITIONS.

PRODUCT-REVISED
as complying with the Florida
Building Code
Acceptance No. 05-0824.04
Expiration Date 10/30/08
By
Miami-Dade Product Control
Division

NO.	REVISION DESCRIPTION	BY	DATE
A4	REVISED CONN. "F" LOADS	K.P.S.	08/12/05
A5	DELETED TABLE NOTE 5	K.P.S.	08/12/05

DRAWN BY: K.P.S. | CHECKED BY: W.W.S.
PLOT: 1=1 | DATE: 05/07/03

DRAWING TITLE: ALUMINUM TUBE CLIPPED MULLIONS

MANUFACTURER: MARVIN WINDOWS & DOORS
HIGHWAY 11 WEST
WARROAD, MN 56763-0100
218-386-1430

CONSULTANTS
W. W. SCHAEFER ENGINEERING & CONSULTING, P.A.
8895 N. MILITARY TRAIL; SUITE C-204
PALM BEACH GARDENS, FL 33410
PHONE: 561-775-4902 FAX: 561-775-4903

CERTIFICATION
AUG 12 2005
WARREN W. SCHAEFER, P.E.
P.E. NO. 44135

DRAWING NO. 1223 | REV. A
SHEET NO. 8 OF 8