MIAMI-DADE

BUILDING CODE COMPLIANCE OFFICE (BCCO)
PRODUCT CONTROL DIVISION

MIAMI-DADE COUNTY, FLORIDA
METRO-DADE FLAGLER BUILDING
140 WEST FLAGLER STREET, SUITE 1603
MIAMI, FLORIDA 33130-1563
(305) 375-2901 FAX (305) 375-2908

# NOTICE OF ACCEPTANCE (NOA)

**Petersen Aluminum Corporation**
**1005 Tonne Road**
**Elk Village, Illinois 60007**

## SCOPE:

This NOA is being issued under the applicable rules and regulations governing the use of construction materials. The documentation submitted has been reviewed by Miami-Dade County Product Control Division and accepted by the Board of Rules and Appeals (BORA) to be used in Miami Dade County and other areas where allowed by the Authority Having Jurisdiction (AHJ).

This NOA shall not be valid after the expiration date stated below. The Miami-Dade County Product Control Division (In Miami Dade County) and/or the AHJ (in areas other than Miami Dade County) reserve the right to have this product or material tested for quality assurance purposes. If this product or material fails to perform in the accepted manner, the manufacturer will incur the expense of such testing and the AHJ may immediately revoke, modify, or suspend the use of such product or material within their jurisdiction. BORA reserves the right to revoke this acceptance, if it is determined by Miami-Dade County Product Control Division that this product or material fails to meet the requirements of the applicable building code.

This product is approved as described herein, and has been designed to comply with the Florida Building Code, including the High Velocity Hurricane Zone.

**DESCRIPTION: Snap Clad Panel 032 Aluminum**

**LABELING:** Each unit shall bear a permanent label with the manufacturer's name or logo, city, state and following statement: "Miami-Dade County Product Control Approved", unless otherwise noted herein.

**RENEWAL** of this NOA shall be considered after a renewal application has been filed and there has been no change in the applicable building code negatively affecting the performance of this product.

**TERMINATION** of this NOA will occur after the expiration date or if there has been a revision or change in the materials, use, and/or manufacture of the product or process. Misuse of this NOA as an endorsement of any product, for sales, advertising or any other purposes shall automatically terminate this NOA. Failure to comply with any section of this NOA shall be cause for termination and removal of NOA.

**ADVERTISEMENT:** The NOA number preceded by the words Miami-Dade County, Florida, and followed by the expiration date may be displayed in advertising literature. If any portion of the NOA is displayed, then it shall be done in its entirety.

**INSPECTION:** A copy of this entire NOA shall be provided to the user by the manufacturer or its distributors and shall be available for inspection at the job site at the request of the Building Official.

This revises # 01-1106.01 and consists of pages 1 through 5.
The submitted documentation was reviewed by Jorge L. Acebo

PRODUCT CONTROL ACCEPTED

## ROOFING SYSTEM APPROVAL:

| | |
|---|---|
| **Category:** | Roofing |
| **Sub-Category:** | Metal, Panels (Non-Structural) |
| **Material:** | Aluminum |
| **Deck Type:** | Wood |
| **Maximum Design Pressure** | **-41.5 psf** |

## TRADE NAMES OF PRODUCTS MANUFACTURED OR LABELED BY APPLICANT:

| Product | Dimensions | Test Specifications | Product Description |
|---|---|---|---|
| Snap-Clad 032 Aluminum | Length: various<br>Height: 1 ¾"<br>Width: 16"<br>Thickness 0.032" | TAS 100 | Corrosion resistant performed standing seam, coated, pre-finished aluminum panels. |

## EVIDENCE SUBMITTED:

| Test Agency | Test Identifier | Test Name/Report | Date |
|---|---|---|---|
| Valspar | 432A898 90L2199 | Salt spray – 1000 hours per ASTM B 117, including Scribe requirement | 08/17/00 |
| Valspar | 451A340, Batch 88L3053 | Accelerated Weathering 3000hours per ASTM D 4587, condition B or ASTM G 23, Method 1 or Method 2, type EH apparatus | 08/17/00 |
| Valspar | 453A356 Batch 96L5905 | Accelerated Weathering 2000 hours per ASTM D 4587, condition B or ASTM G 23, Method 1 or Method 2, type EH apparatus | 08/17/00 |
| PRI Asphalt Technologies, Inc. | PRI01004 | TAS-100-95 (Wind Driven Rain Test) | 03/26/01 |
| Underwriters Laboratories | 96NK24097 | UL-90 | 08/13/96 |
| Underwriters Laboratories | 01NK6687 | UL-90 | 02/09/01 |
| Farabaugh Engineering and Testing Inc. | T176-05 | TAS 125-03 | 07/15/05 |
| The Dallas Laboratories Inc. | #20950 | ASTM E 331-86<br>ASTM-E 283-91 | 04/08/94 |

## APPROVED ASSEMBLIES:

**System:** Snap-Clad 032 Aluminum panel

**Deck Type:** Wood, Non-insulated

**Deck Description:** New Construction $^{19}/_{32}$" or greater plywood or wood plank.

**Maximum Uplift Pressure:** The maximum allowable design pressure for the 16" wide panel shall be **–41.5 psf.**

**Deck Attachment:** In accordance with applicable Building Code, but in no case shall it be less than 8d ring shank nails spaced 6" o.c. In reroofing, where the deck is less than $^{19}/_{32}$" thick (Minimum $^{15}/_{32}$") The above attachment method must be in addition to existing attachment.

**Underlayment:** Minimum Underlayment shall be an ASTM D 226 Type II installed with a minimum 4" side-lap and 6" end-laps. Underlayment shall be fastened with corrosion resistant tin-caps and 12 gauge 1 ¼" annular ring-shank nails, spaced 6" o.c. at all laps and two staggered rows 12" o.c. in the field of the roll. Or, any approved Underlayment having a current NOA.

**Fire Barrier Board:** Any approved fire barrier having a current NOA. Or for class A or B fire rating, install minimum ¼" thick Georgia Pacific "Dens Deck" (with current NOA) or minimum 4mm thick of Tritex, RockRoof (with current NOA) or $^{5}/_{8}$" water resistant type X gypsum sheathing with treated core and facer.

**Valleys:** Valley construction shall be in compliance with Roofing Application Standard RAS 133 and with the current published installation instructions and details in Petersen Aluminum Roofing Installation Manual.

**Metal Panels and Accessories:** Install the "Snap-Clad 032 Aluminum Metal Panel" panels including flashing penetrations, valleys, end laps and accessories in compliance "Petersen Aluminum Corporation" current, published installation instructions and in compliance with the minimum requirements detailed in Roofing Application Standard RAS 133.

Panels shall be installed along the rib with SNAP CLAD Clips secured with #10-12 x 1" A-Point fasteners (2 per clip); the screws shall be of sufficient length to penetrate through the sheathing a minimum of $^{3}/_{16}$". The female rib of panel is snapped over the male rib of panel. Panel clips shall be spaced a maximum of 18 inches o.c.

## LIMITATIONS

1. The maximum designed pressure listed herein shall be applicable to all roof pressure zones (i.e. field, perimeters, and corners). Neither rational analysis, nor extrapolation shall be permitted for enhanced fastening at enhanced pressure zones (i.e. perimeters, extended corners and corners).
2. Panels may be roll formed in continuous lengths from eave to ridge. Maximum lengths shall be as described in Roofing Application Standard RAS 133
3. All panels shall be permanently labeled with the manufacturer's name and/or logo, and the following statement: "Miami-Dade County Product Control Approved. All clips shall be permanently labeled with the manufacturer's name and/or logo, and/or model.
4. Fire classification is not part of this acceptance; refer to a current Approved Roofing Materials Directory for fire ratings of this product.
5. All products listed herein shall have a quality assurance audit in accordance with the Florida Building Code and Rule 9B-72 of the Florida Administrative Code.

## PROFILE DRAWINGS

**Petersen Aluminum Corporation**
**032 Aluminum Snap-Clad Panel**

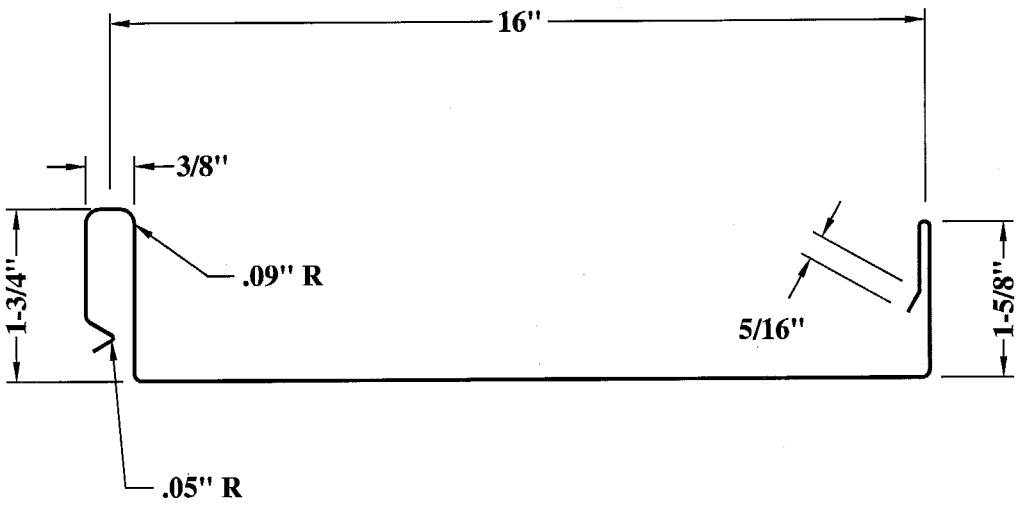

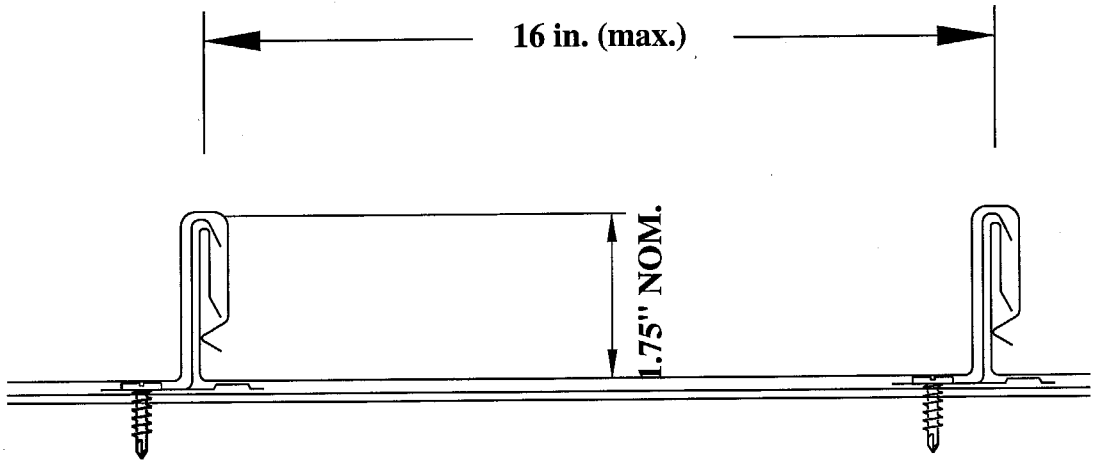


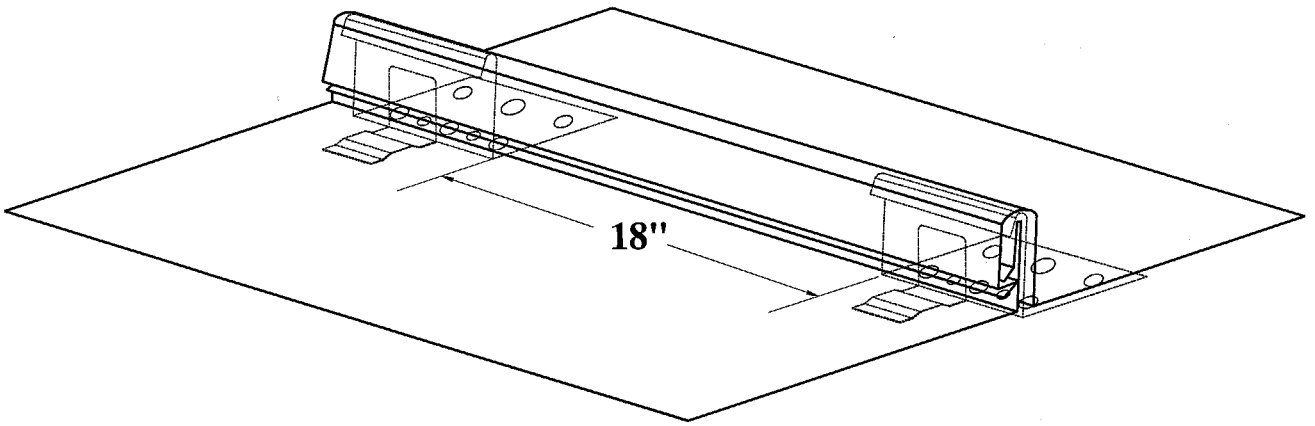


**END OF THIS ACCEPTANCE**