MIAMI-DADE

BUILDING CODE COMPLIANCE OFFICE (BCCO)
PRODUCT CONTROL DIVISION

MIAMI-DADE COUNTY, FLORIDA
METRO-DADE FLAGLER BUILDING
140 WEST FLAGLER STREET, SUITE 1603
MIAMI, FLORIDA 33130-1563
(305) 375-2901 FAX (305) 375-2908

NOTICE OF ACCEPTANCE (NOA)

Clay Forever, LLC.
6645 NW 77th Ave
Miami, FL. 33166

SCOPE:

This NOA is being issued under the applicable rules and regulations governing the use of construction materials. The documentation submitted has been reviewed by Miami-Dade County Product Control Division and accepted by the Board of Rules and Appeals (BORA) to be used in Miami Dade County and other areas where allowed by the Authority Having Jurisdiction (AHJ).

This NOA shall not be valid after the expiration date stated below. The Miami-Dade County Product Control Division (In Miami Dade County) and/or the AHJ (in areas other than Miami Dade County) reserve the right to have this product or material tested for quality assurance purposes. If this product or material fails to perform in the accepted manner, the manufacturer will incur the expense of such testing and the AHJ may immediately revoke, modify, or suspend the use of such product or material within their jurisdiction. BORA reserves the right to revoke this acceptance, if it is determined by Miami-Dade County Product Control Division that this product or material fails to meet the requirements of the applicable building code.

This product is approved as described herein, and has been designed to comply with the High Velocity Hurricane Zone of the Florida Building Code.

DESCRIPTION: Altusa Barrel Clay Roof Tile

LABELING: Each unit shall bear a permanent label with the manufacturer's name or logo, city, state and following statement: "Miami-Dade County Product Control Approved", unless otherwise noted herein.

RENEWAL of this NOA shall be considered after a renewal application has been filed and there has been no change in the applicable building code negatively affecting the performance of this product.

TERMINATION of this NOA will occur after the expiration date or if there has been a revision or change in the materials, use, and/or manufacture of the product or process. Misuse of this NOA as an endorsement of any product, for sales, advertising or any other purposes shall automatically terminate this NOA. Failure to comply with any section of this NOA shall be cause for termination and removal of NOA.

ADVERTISEMENT: The NOA number preceded by the words Miami-Dade County, Florida, and followed by the expiration date may be displayed in advertising literature. If any portion of the NOA is displayed, then it shall be done in its entirety.

INSPECTION: A copy of this entire NOA shall be provided to the user by the manufacturer or its distributors and shall be available for inspection at the job site at the request of the Building Official.

This NOA revises 02-1115.02 and consists of pages 1 through 4.
The submitted documentation was reviewed by Jorge Acebo.

ROOFING ASSEMBLY APPROVAL

Category: Roofing
Sub-Category: Roofing Tiles
Material: Clay

1. SCOPE

This renews roofing system using **Altusa 'Barrel' Clay Roof Tiles**, as manufactured by **Clay Forever, LLC.** and described in Section 2 of this Notice of Acceptance. For locations where the pressure requirements, as determined by applicable Building Code does not exceed the design pressure values obtained by calculations in compliance with RAS 127 using the values listed in section 4 herein. The attachment calculations shall be done as a moment based system.

2. PRODUCT DESCRIPTION

Manufactured by Applicant	Dimensions	Test Specifications	Product Description
Barrel Tile	l = 18 ½" w = 8 ½" ½" thick nominal	TAS 112	High profile, two-piece, clay roof tile. For mortar set or adhesive set applications with a nominal 2-½" headlap.
Trim Pieces	Length: varies Width: varies varying thickness	TAS 112	Accessory trim, clay roof pieces for use at hips, rakes, ridges and valley terminations. Manufactured for each tile profile.

2.1 SUBMITTED EVIDENCE:

Test Agency	Test Identifier	Test Name/Report	Date
The Center for Applied Engineering, Inc.	94-083	Static Uplift Testing PA 101 (Adhesive Set)	April 1994
The Center for Applied Engineering, Inc.	257869-1	Static Uplift Testing PA 101 (Mortar Set)	Jan. 1997
Redland Technologies	P0647-01	Wind Tunnel Testing PA 108 (Mortar Set)	Aug. 1994
Walker Engineering, Inc.	Calculations	Aerodynamic Multiplier	March 1999
Walker Engineering, Inc.	Evaluation Calculations	25-7183	March 1995
Walker Engineering, Inc.	Evaluation Calculations	25-7094	February 1996
Walker Engineering, Inc.	Evaluation Calculations	25-7496	April 1996
Walker Engineering, Inc.	Evaluation Calculations	25-7584 25-7804b-8 25-7804-4 & 5 25-7848-6	December 1996

3. LIMITATIONS

3.1 Fire classification is not part of this acceptance.

3.2 For mortar or adhesive set tile applications, a static field uplift test shall be performed in accordance with RAS 106.

3.3 Applicant shall retain the services of a Miami-Dade County Certified Laboratory to perform quarterly test in accordance with TAS 112, appendix 'A'. Such testing shall be submitted to the Building Code Compliance Office for review.

3.4 Minimum underlayment shall be in compliance with the applicable Roofing Applications Standards listed section 4.1 herein.

3.5 30/90 hot mopped underlayment applications may be installed perpendicular to the roof slope unless stated otherwise by the underlayment material manufacturers published literature.

3.6 This acceptance is for wood deck applications. Minimum deck requirements shall be in compliance with applicable building code.

4. INSTALLATION

4.1 Altusa 'Barrel' Clay Roof Tile and its components shall be installed in strict compliance with Roofing Application Standard RAS 120.

4.2 Data For Attachment Calculations

Table 1: Average Weight (W) and Dimensions (l x w)

Tile Profile	Weight-W (lbf)	Length-l (ft)	Width-w (ft)
Barrel Tile	6.3	1.54	0.69

Table 2: Aerodynamic Multipliers - λ (ft^3)

Tile Profile	λ (ft^3) Direct Deck Application
Barrel Tile	0.263

Table 3: Restoring Moments due to Gravity - M_g (ft-lbf)

2":12"		3":12"		4":12"		5":12"		6":12"		7":12" or greater	
Battens	Direct Deck	Battens	Direct Deck	Battens	Direct Deck	Battens	Direct Deck	Battens	Direct Deck	Battens	Direct Deck
N/A	5.12	N/A	5.02	N/A	4.95	N/A	4.85	N/A	4.72	N/A	4.60

Table 4: Attachment Resistance Expressed as a Moment - M_f (ft-lbf) for Single Patty Adhesive Set Systems

Tile Profile	Tile Application	Minimum Attachment Resistance
Barrel Tile	Polyfoam PolyPro™	177 (Clay tile)[1]
	Flexible TileBond	115 (Clay tile)[2]

1 Place 23 grams per pan and 23 grams per cap of PolyPro™.

2 Place 11.8 grams per pan and 11.6 grams per cap of TileBond.

Table 4A: Attachment Resistance Expressed as a Moment - M_f (ft-lbf) for Mortar Set Systems		
Tile Profile	**Tile Application**	**Attachment Resistance**
Barrel Tile	Mortar Set[1]	24.5[3]
		213.8[4]
3 Bermuda Roof TileTite mortar. 4 Quickcrete Roof Tile Mortar # 1140.		

5. LABELING

All tiles shall bear the imprint or identifiable marking of the manufacturer's name or logo, or following statement: "Miami-Dade County Product Control Approved".

6. BUILDING PERMIT REQUIREMENTS

6.1 Application for building permit shall be accompanied by copies of the following:

6.1.1 This Notice of Acceptance.

6.1.2 Any other documents required by the Building Official or applicable building code in order to properly evaluate the installation of this system.

PROFILE DRAWINGS

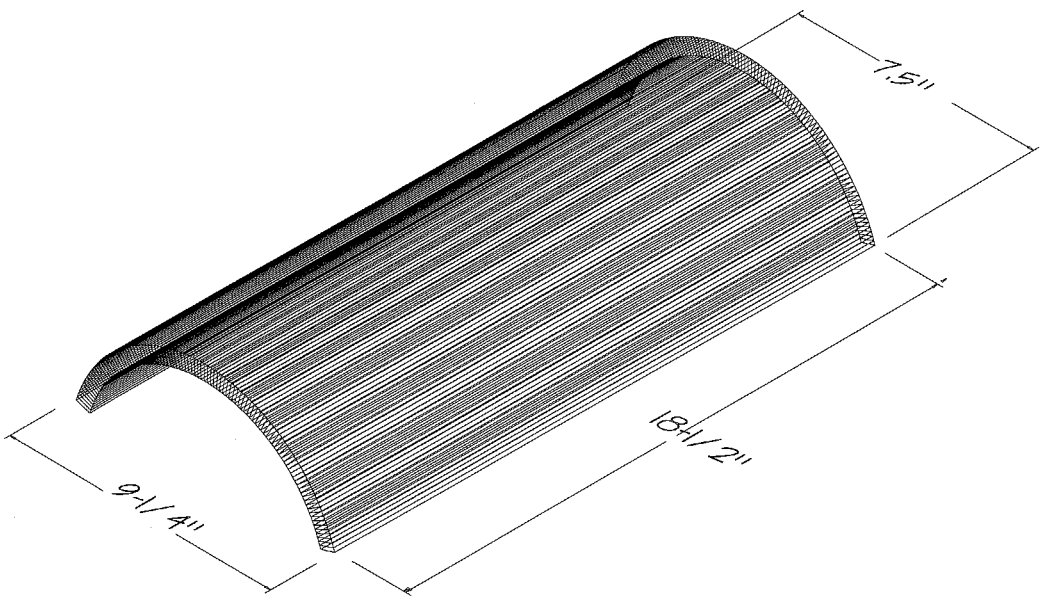

BARREL CLAY ROOF TILE

END OF THIS ACCEPTANCE