MIAMI-DADE

BUILDING CODE COMPLIANCE OFFICE (BCCO)
PRODUCT CONTROL DIVISION

MIAMI-DADE COUNTY, FLORIDA
METRO-DADE FLAGLER BUILDING
140 WEST FLAGLER STREET, SUITE 1603
MIAMI, FLORIDA 33130-1563
(305) 375-2901 FAX (305) 375-2908

# NOTICE OF ACCEPTANCE (NOA)

**Arch Aluminum & Glass Company, Inc.**
**10200 NW 67th Street**
**Tamarac, FL 33321**

**SCOPE:**

This NOA is being issued under the applicable rules and regulations governing the use of construction materials. The documentation submitted has been reviewed by Miami-Dade County Product Control Division and accepted by the Board of Rules and Appeals (BORA) to be used in Miami Dade County and other areas where allowed by the Authority Having Jurisdiction (AHJ).

This NOA shall not be valid after the expiration date stated below. The Miami-Dade County Product Control Division (In Miami Dade County) and/or the AHJ (in areas other than Miami Dade County) reserve the right to have this product or material tested for quality assurance purposes. If this product or material fails to perform in the accepted manner, the manufacturer will incur the expense of such testing and the AHJ may immediately revoke, modify, or suspend the use of such product or material within their jurisdiction. BORA reserves the right to revoke this acceptance, if it is determined by Miami-Dade County Product Control Division that this product or material fails to meet the requirements of the applicable building code.

This product is approved as described herein, and has been designed to comply with the Florida Building Code, including High Velocity Hurricane Zone of the Florida Building Code.

**DESCRIPTION: Series "4500" Flush Glazed Aluminum Storefront System – N.I.**

**APPROVAL DOCUMENT:** Drawing No. **00-13**, titled "Series 4500 Alum Flush Glaze Storefront SYS.", sheets 1 through 8 of 8, prepared by AL-Farooq Corporation, dated 07/06/00 and last revised on 12/02/05, signed and sealed by Humayoun Farooq, P. E., bearing the Miami-Dade County Product Control Renewal stamp with the Notice of Acceptance number and expiration date by the Miami-Dade County Product Control Division.

**MISSILE IMPACT RATING: None**

**LABELING:** Each unit shall bear a permanent label with the manufacturer's name or logo, city, state and following statement: "Miami-Dade County Product Control Approved", unless otherwise noted herein.

**RENEWAL** of this NOA shall be considered after a renewal application has been filed and there has been no change in the applicable building code negatively affecting the performance of this product.

**TERMINATION** of this NOA will occur after the expiration date or if there has been a revision or change in the materials, use, and/or manufacture of the product or process. Misuse of this NOA as an endorsement of any product, for sales, advertising or any other purposes shall automatically terminate this NOA. Failure to comply with any section of this NOA shall be cause for termination and removal of NOA.

**ADVERTISEMENT:** The NOA number preceded by the words Miami-Dade County, Florida, and followed by the expiration date may be displayed in advertising literature. If any portion of the NOA is displayed, then it shall be done in its entirety.

**INSPECTION:** A copy of this entire NOA shall be provided to the user by the manufacturer or its distributors and shall be available for inspection at the job site at the request of the Building Official.

This NOA **revises/renews NOA # 00-1220.05** and consists of this page 1 and evidence pages E-1, as well as approval document mentioned above

The submitted documentation was reviewed by **Herminio F. Gonzalez, P.E., Director, BCCO**

PRODUCT CONTROL ACCEPTED 01/06/2006

**Arch Alumium & Glass Company, Inc.**

## NOTICE OF ACCEPTANCE: EVIDENCE SUBMITTED

**A. DRAWINGS**

1. Manufacturer's die drawings and sections.
2. Drawing No. **00-13**, titled "Series 4500 Alum Flush Glaze Storefront SYS.", sheets 1 through 8 of 8, prepared by AL-Farooq Corporation, dated 07/06/00 and last revised on 12/02/05, signed and sealed by Humayoun Farooq, P. E.

**B. TESTS**

1. Test reports on 1) Air Infiltration Test, per FBC, TAS 202-94
   2) Uniform Static Air Pressure Test, Loading per FBC, TAS 202-94
   3) Water Resistance Test, per FBC, TAS 202-94

   along with installation diagram of an aluminum storefront system prepared by Fenestration Testing Laboratory, Inc., Test Report No. **FTL-1548**, dated January 15, 1997, signed and sealed by Gilbert Diamond, P.E.
   ***"Submitted under NOA 00-1220.05"***

**C. CALCULATIONS**

1. Revised Anchor Calculation and Structural analysis, prepared by AL-Farooq Corporation, dated 08/23/05, signed and sealed by Humayoun Farooq, P.E.
   **Complies with ASTM E1300-02**
   **No 1/3 stress increase used in anchors into masonry or steel substrate.**
2. Mullion calculations and structural analysis, prepared by Al-Farooq Corporation, dated Nov. 16, 2000, signed and sealed by Humayoun Farooq, P.E.
   ***"Submitted under NOA 00-1220.05"***

**D. QUALITY ASSURANCE BY**

1. Miami Dade Building Code Compliance Office (BCCO).

**E. MATERIAL CERTIFICATIONS**

1. None

**F. STATEMENTS**

1. Statement letter of conformance and no financial interest, dated 08/23/05, signed and sealed by Humayoun Farooq.

**G. OTHER**

1. Letter from the consultant, dated 11/14/05, stating that the product is in compliance with the Florida Building Code (FBC).
2. Notice of Acceptance No. **00-1220.05**, issued to Arch Aluminum & Glass Company for their "Series 4500 Alum Flush Glaze Storefront SYS", approved on 04/12/01 and expiring on 03/19/06.

**Herminio F. Gonzalez, P.E.**
**Director, Building Code Compliance Office**
**NOA No 05-0902.01**
**Expiration Date: March 19, 2011**
**Approval Date: January 26, 2006**

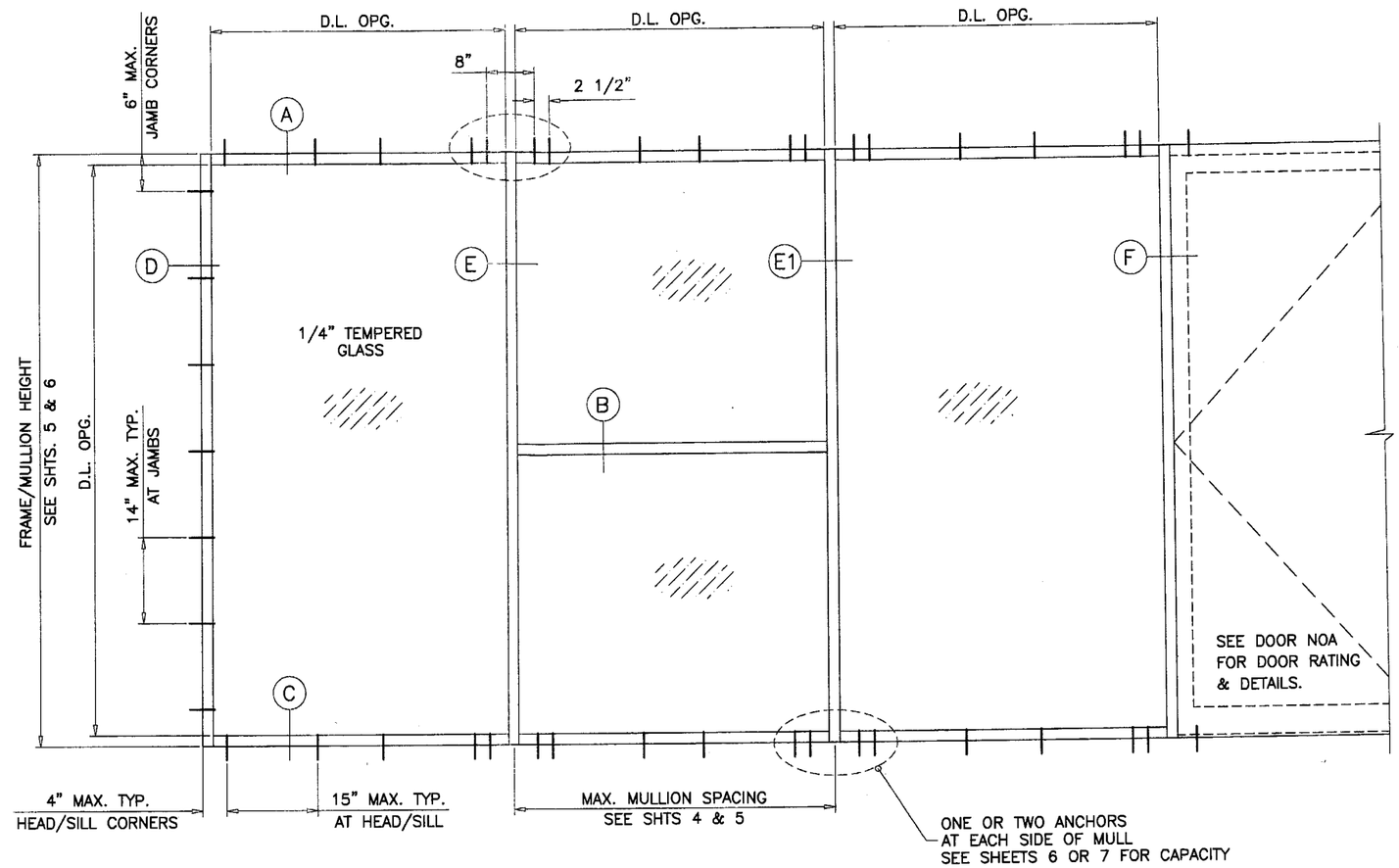


TYPICAL ELEVATION

## SERIES 4500
## ALUMINUM FLUSH GLAZED STOREFRONT SYSTEM

**DOORS:** THIS SYSTEM MAY BE USED IN CONJUNCTION WITH MIAMI DADE COUNTY APPROVED OUTSWING ENTRANCE DOORS.

**MULLIONS:** SEE SHEETS 4 AND 5 TO DETERMINE DESIGN LOAD CAPACITY OF MULLIONS FOR VARIOUS CONFIGURATIONS AND REINFORCEMENT.

**ANCHORS:** SEE SHEETS 6 & 7 TO DETERMINE THE CAPACITY OF ANCHOR OPTIONS.

CODE REQUIREMENTS FOR SAFEGUARDS MUST BE OBSERVED.

THIS PRODUCT HAS BEEN DESIGNED AND TESTED TO COMPLY WITH THE REQUIREMENTS OF THE FLORIDA BUILDING CODE 2004 EDITION INCLUDING HIGH VELOCITY HURRICANE ZONE.

WOOD BUCKS BY OTHERS, MUST BE ANCHORED PROPERLY TO TRANSFER LOADS TO THE STRUCTURE.

ANCHORS SHALL BE AS LISTED, SPACED AS SHOWN ON DETAILS, ANCHORS EMBEDMENT TO BASE MATERIAL SHALL BE BEYOND WALL DRESSING OR STUCCO.

ANCHORING OR LOADING CONDITIONS NOT SHOWN IN THESE DETAILS ARE NOT PART OF THIS APPROVAL.

A LOAD DURATION INCREASE IN ALLOWABLE STRESS IS USED IN DESIGN OF WOOD ANCHORS ONLY.

ALL STEEL IN CONTACT WITH ALUMINUM TO BE PAINTED OR PLATED.

PRODUCT RENEWED
as complying with the Florida Building Code
Acceptance No. 05-0902.01
Expiration Date 03/19/11
By
Miami Dade Product Control Division

STOREFRONT SYSTEM IS NOT RATED FOR IMPACT.
INSTALLATION OF THIS PRODUCT IN THE HVHZ AREA REQUIRES THE USE OF APPROVED SHUTTERS OR EXTERNAL PROTECTION DEVICES COMPLYING WITH HVHZ REQUIREMENTS.

GLASS BASED ON ASTM E1300-02 (3 SEC. GUSTS)

Engr: DR. HUMAYOUN FAROOQ
STRUCTURES
FLA. PE # 16557
C.A.N. 3538

DEC 05 2005

AL-FAROOQ CORPORATION
ENGINEERS, PLANNERS & PRODUCT DESIGN
1235 SW 87 AVE
MIAMI, FLORIDA 33174
TEL. (305) 264-8100 FAX. (305) 262-6978

STORE\00-13AAC

SERIES 4500 ALUM FLUSH GLAZE STOREFRONT SYS.

ARCH ALUMINUM & GLASS CO.
10200 NORTHWEST 67TH STREET
TAMARAC, FL 33321
TEL. (800) 432-8132 FAX. (954) 724-9293

revisions:

| no | date | by | description |
|---|---|---|---|
| A | 08.24.05 | | UPDATED FOR 2004 FBC |
| B | 11.08.05 | | DTL. NO. REV. |
| C | 12.02.05 | | REV. PER BCCO COMMENTS |

date: 07-06-00
scale: 1/2"=1'-0"
dr. by: HAMID
chk. by:

drawing no. 00-13

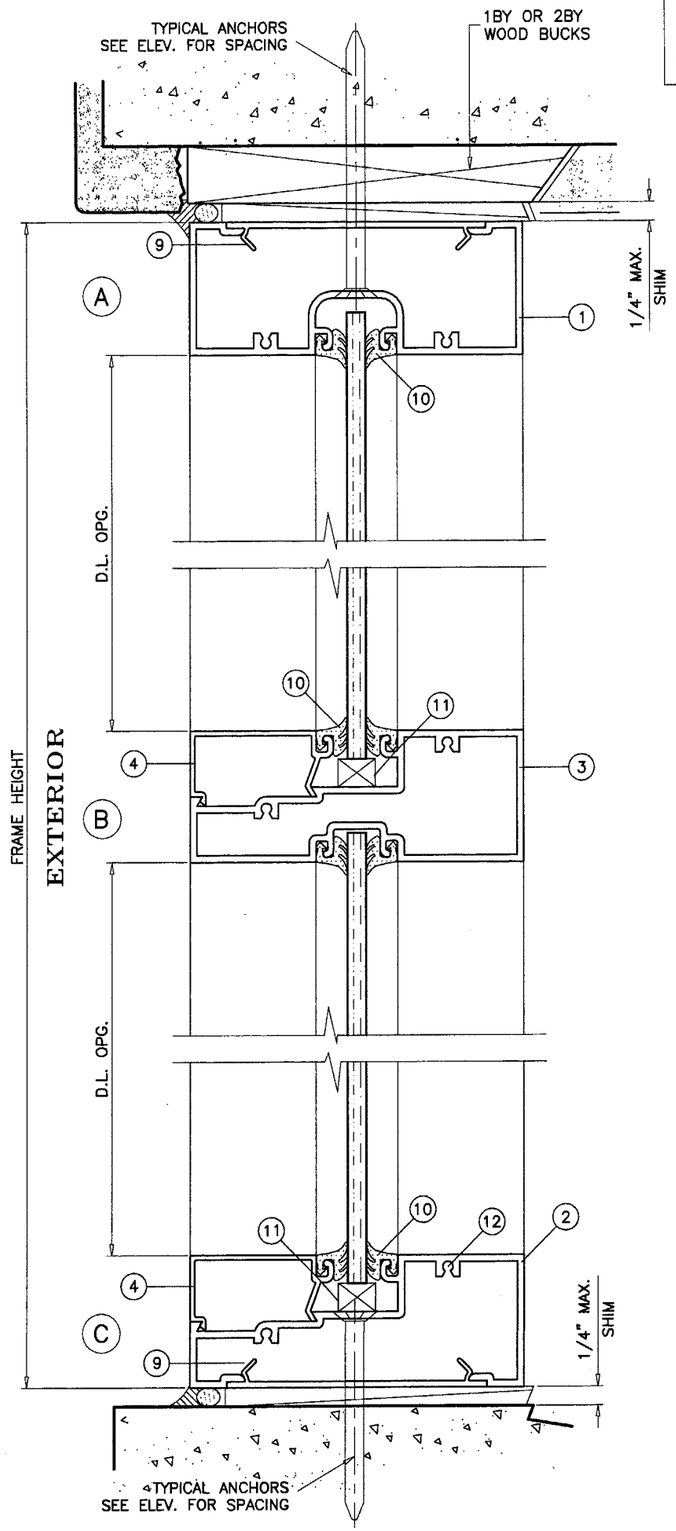


WOOD BUCKS AND METAL STRUCTURES NOT BY ARCH. MUST SUPPORT LOADS IMPOSED BY GLAZING SYSTEM AND TRANSFER THEM TO THE BUILDING STRUCTURE.

| ITEM NO. | PART NUMBER | QUANTITY | DESCRIPTION | MATERIAL | MANF./SUPPLIER/REMARKS |
|---|---|---|---|---|---|
| 1 | 4501 | AS REQD. | FRAME HEAD | 6063–T5 | ARCH ALUM & GLASS CO. |
| 2 | 4502 | AS REQD. | FRAME HORIZONTAL/SILL | 6063–T5 | ARCH ALUM & GLASS CO. |
| 3 | 4504 | AS REQD. | FRAME HORIZONTAL | 6063–T5 | ARCH ALUM & GLASS CO. |
| 4 | 4503 | AS REQD. | GLAZING STOP | 6063–T5 | ARCH ALUM & GLASS CO. |
| 5 | 4500 | AS REQD. | FRAME JAMB/MULLION | 6063–T6 | ARCH ALUM & GLASS CO. |
| 6 | – | – | – | – | – |
| 7 | 4007 | AS REQD. | POCKET FILLER | 6063–T6 | ARCH ALUM & GLASS CO. |
| 8 | – | OPTIONAL | SILL FLASHING | 6063–T5 | ARCH ALUM & GLASS CO. |
| 9 | 4008 | AS REQD. | SNAP IN COVER, 2–1/2" LONG | 6063–T5 | ARCH ALUM & GLASS CO. |
| 10 | H–63 | AS REQD. | GLAZING GASKET | NEOPRENE | ARCH ALUM & GLASS CO. |
| 11 | H–62 | AS REQD. | SETTING BLOCK AT 1/4" POINTS | NEOPRENE | 1/4" 1/2" X 2" LONG |
| 12 | #8 X 1–1/4' | 2/ CORNER | ASSEMBLY SCREWS PHSMS | STEEL | – |
| 13 | – | AS REQD. | OPTIONAL REINFORCING | STEEL | – |

## TYPICAL ANCHORS: SEE ELEV. FOR SPACING

**ANCHOR 'A'**
INTO 2BY WOOD BUCKS OR WOOD STRUCTURE
# 1/4" TAPCONS WITH 1–3/8" MIN. PENETRATION INTO WOOD

**ANCHOR 'B'**
THRU WOOD BUCKS INTO MASONRY
1/4" TAPCONS (ELCO OR EQUIV.) WITH 1–1/4" MIN. EMBED INTO MASONRY

**ANCHOR 'C'**
DIRECTLY INTO MASONRY
1/4" TAPCONS (ELCO OR EQUIV.) WITH 1–1/4" MIN. EMBED INTO MASONRY

**ANCHOR 'C'**
INTO METAL STRUCTURES (STEEL OR ALUMINUM 1/8" MIN. THICKNESS)
# 14 SMS OR 1/4" SELF DRILLING SCREWS

STEEL : Fy = 36 KSI MIN.
ALUMINUM : 6063–T5 MIN.
(STEEL IN CONTACT WITH ALUMINUM TO BE PLATED OR PAINTED)

**TYPICAL EDGE DISTANCE**
INTO CONCRETE AND MASONRY = 3" MIN.
INTO WOOD STRUCTURE = 1" MIN.
INTO METAL STRUCTURE = 3/8" MIN.

## SEALANTS:

GLAZING BEAD TO FRAME, MULLION AND FRAME SEAMS AND ALL FRAME CORNERS SEALED WITH CLEAR/ALUM COLORED SILICONE 'SCHNEE MOREHEAD 5504'.

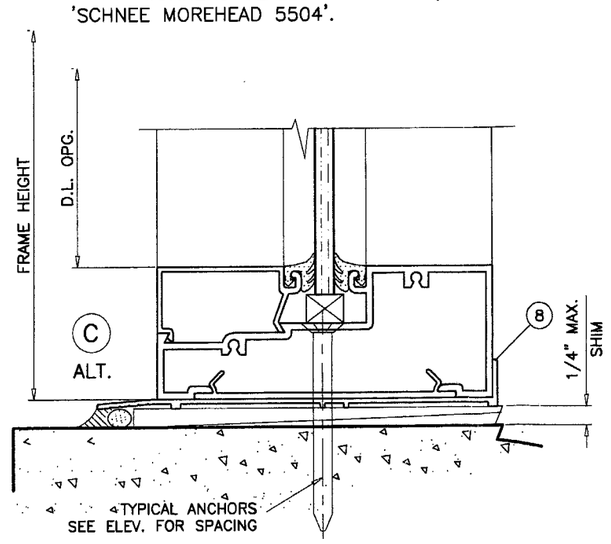


PRODUCT RENEWED
as complying with the Florida
Building Code
Acceptance No. 05-0902.11
Expiration Date 03/19/11
By M Thaut
Miami Dade Product Control
Division

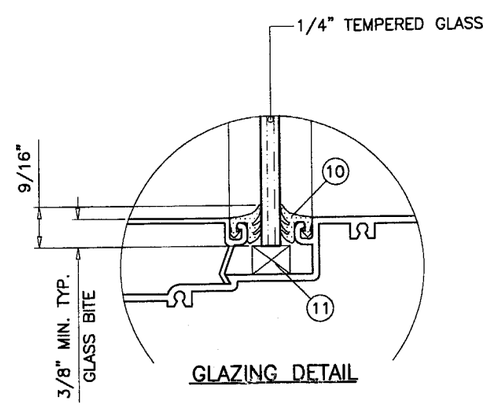


GLAZING DETAIL

Engr: DR. HUMAYOUN FAROOQ
STRUCTURES
FLA. PE # 16557
C.A.N. 3538

DEC 05 2005


AL-FAROOQ CORPORATION
ENGINEERS, PLANNERS & PRODUCT DESIGN
1235 SW 87 AVE
MIAMI, FLORIDA 33174
TEL. (305) 264-8100 FAX. (305) 262-6978
STORE\00-13AAC


SERIES 4500 ALUM FLUSH GLAZE STOREFRONT SYS.


ARCH ALUMINUM & GLASS CO.
10200 NORTHWEST 67TH STREET
TAMARAC, FL 33321
TEL. (800) 432-8132 FAX. (954) 724-9293


revisions:

| no | date | by | description |
|---|---|---|---|
| A | 08.24.05 | | ANCHORS/SHIMS REV. |
| B | 11.08.05 | | EDGE DIST. ADD. ALLOY REV. |
| C | 12.02.05 | | NO CHANGE THIS SHEET |

date: 07-06-00
scale: 1/2" = 1"
dr. by: HAMID
chk. by:

drawing no. 00-13

sheet 2 of 8

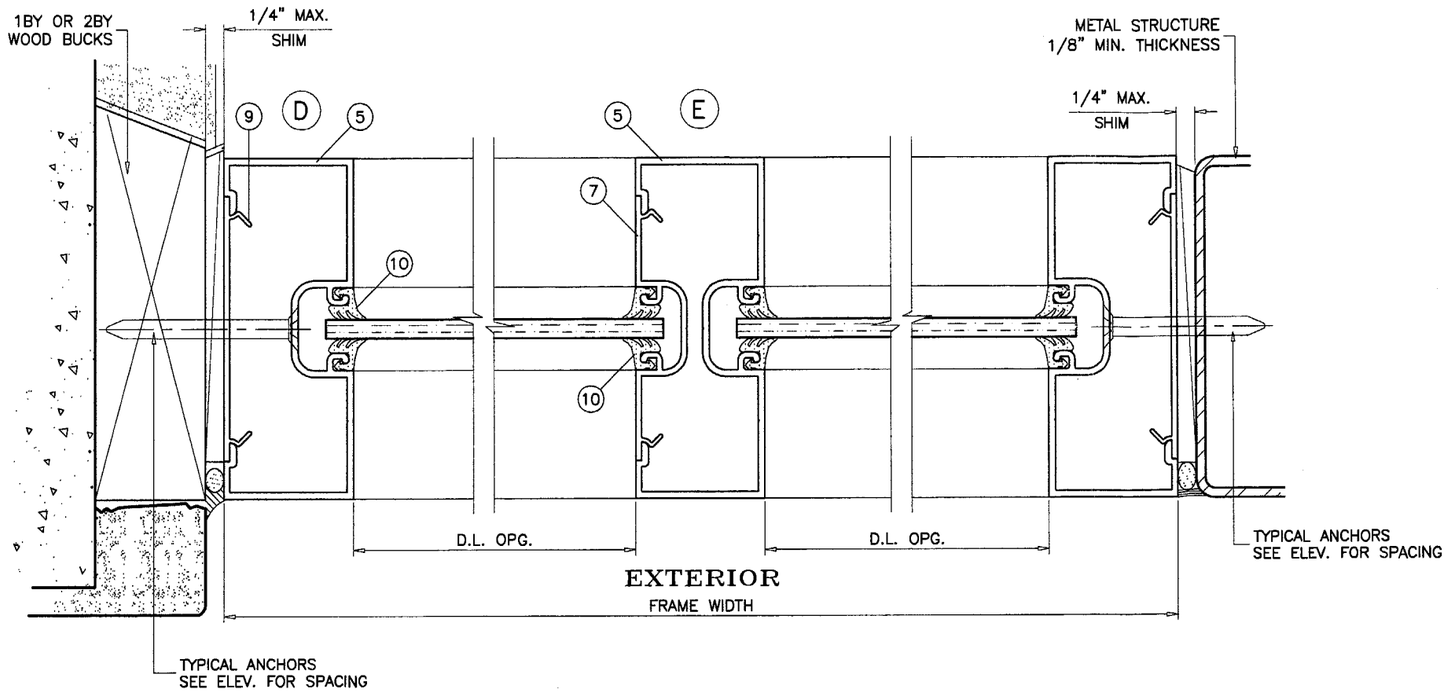


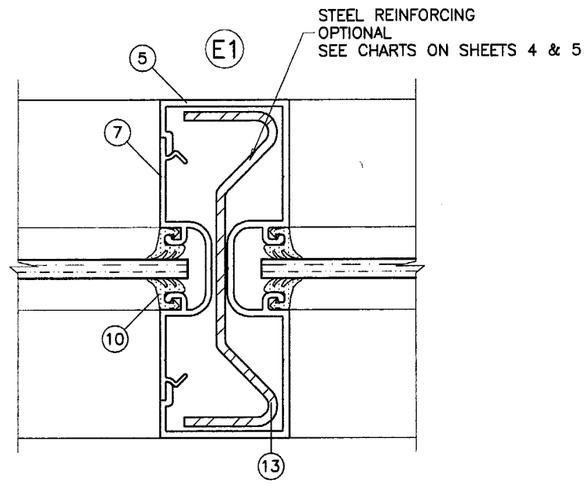


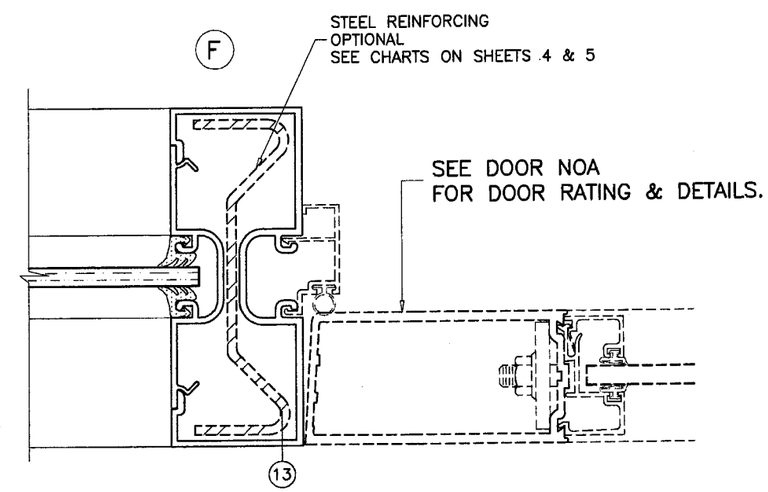


**PRODUCT RENEWED**
**as complying with the Florida Building Code**
**Acceptance No.** 05-0902.01
**Expiration Date** 03/19/11
**By** M Hall
**Miami Dade Product Control Division**

Engr: DR. HUMAYOUN FAROOQ
STRUCTURES
FLA. PE # 16557
C.A.N. 3538

DEC 05 2005


**AL-FAROOQ CORPORATION**
ENGINEERS, PLANNERS & PRODUCT DESIGN
1235 SW 87 AVE
MIAMI, FLORIDA 33174
TEL. (305) 264-8100 FAX. (305) 262-6978


STORE\00-13AAC

SERIES 4500 ALUM FLUSH GLAZE STOREFRONT SYS.


ARCH ALUMINUM & GLASS CO.
10200 NORTHWEST 67TH STREET
TAMARAC, FL 33321
TEL. (800) 432-8132 FAX. (954) 724-9293


revisions:

| no | date | by | description |
|---|---|---|---|
| A | 08.24.05 | | REINFORCING/SHIMS REV. |
| B | 11.08.05 | | PART NO. ADDED |
| C | 12.02.05 | | NO CHANGE THIS SHEET |

date: 07-06-00
scale: 1/2" = 1"
dr. by: HAMID
chk. by:

drawing no.
00-13

# MULLION LOAD CHARTS FOR MULLS WITHOUT INTERMEDIATE HORIZONTALS

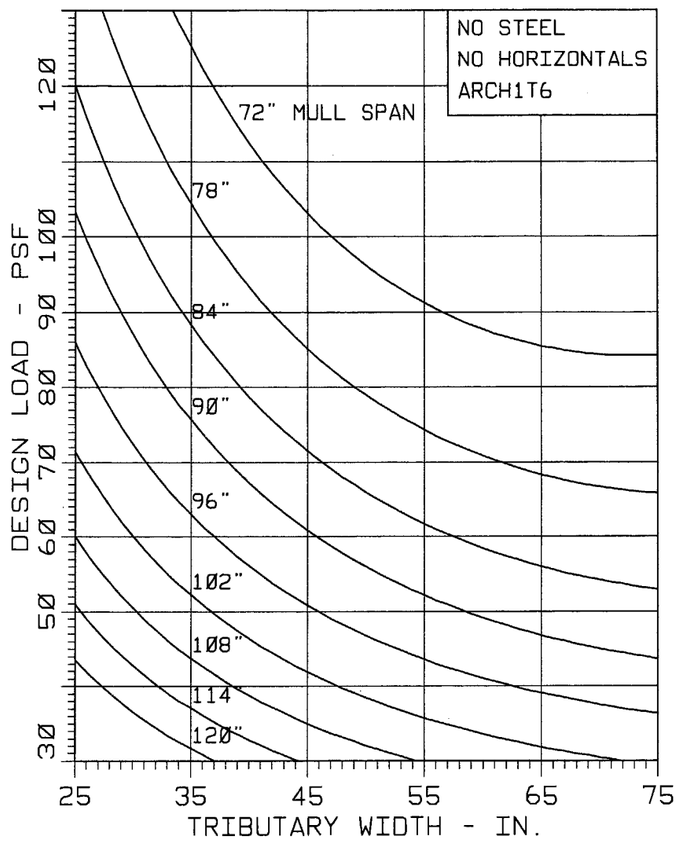


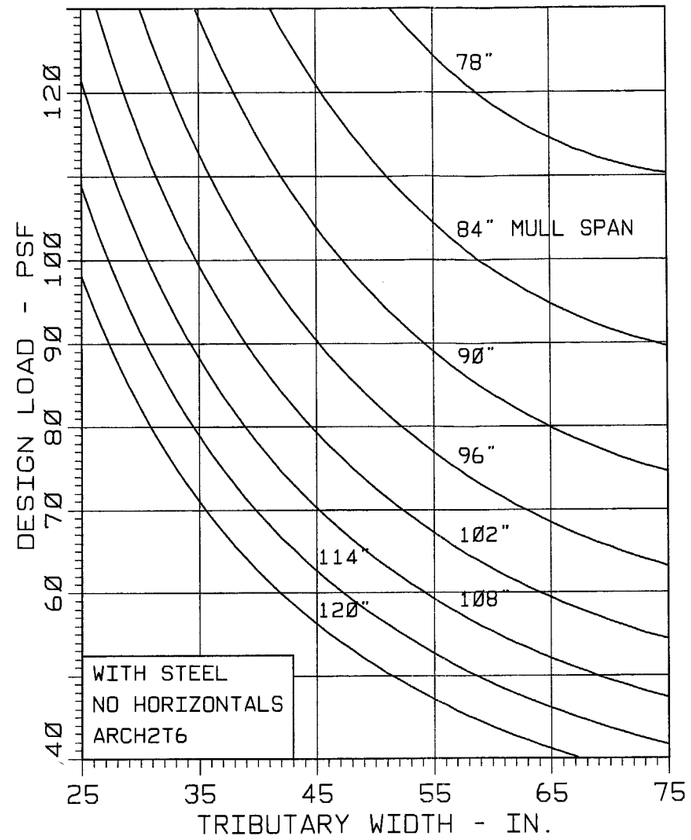


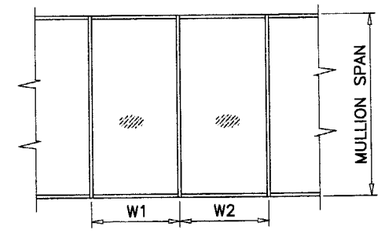


TRIBUTARY WIDTH = $\frac{W1 + W2}{2}$

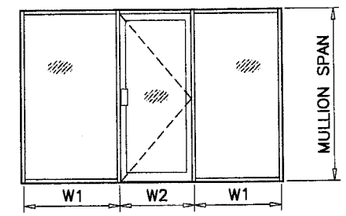


TRIBUTARY WIDTH = $\frac{W1 + W2}{2}$

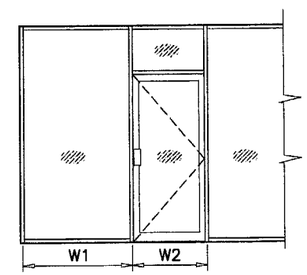


TRIBUTARY WIDTH = $\frac{W1 + W2}{2}$

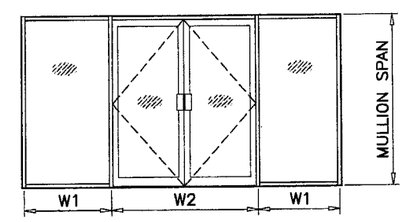


TRIBUTARY WIDTH = $\frac{W1}{2} + \frac{W2}{4}$

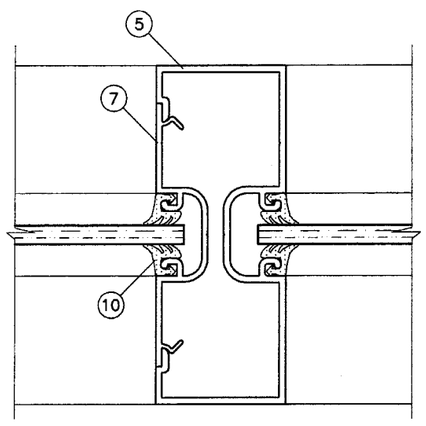


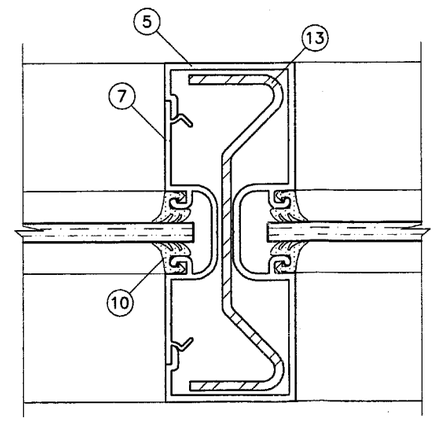


**PRODUCT RENEWED**
**as complying with the Florida Building Code**
**Acceptance No.** 05-0902.01
**Expiration Date** 03/19/11
**By** [illegible]
**Miami Dade Product Control Division**

Engr: DR. HUMAYOUN FAROOQ
STRUCTURES
FLA. PE # 16557
C.A.N. 3538

DEC 05 2005

**AL-FAROOQ CORPORATION**
ENGINEERS, PLANNERS & PRODUCT DESIGN
1235 SW 87 AVE
MIAMI, FLORIDA 33174
TEL. (305) 264-8100 FAX. (305) 262-6978
STORE\00-13AAC

SERIES 4500 ALUM FLUSH GLAZE STOREFRONT SYS.
ARCH ALUMINUM & GLASS CO.
10200 NORTHWEST 67TH STREET
TAMARAC, FL 33321
TEL. (800) 432-8132 FAX. (954) 724-9293

revisions:

| no | date | by | description |
|---|---|---|---|
| A | 08.24.05 | | GRAPHS REV. |
| B | 11.08.05 | | PART NO. ADDED |
| C | 12.02.05 | | NO CHANGE THIS SHEET |

date: 07-06-00
scale: 1/2" = 1"
dr. by: HAMID
chk. by:

drawing no.
00-13

sheet 4 of 8

# MULLION LOAD CHARTS FOR MULLS WITH INTERMEDIATE HORIZONTALS

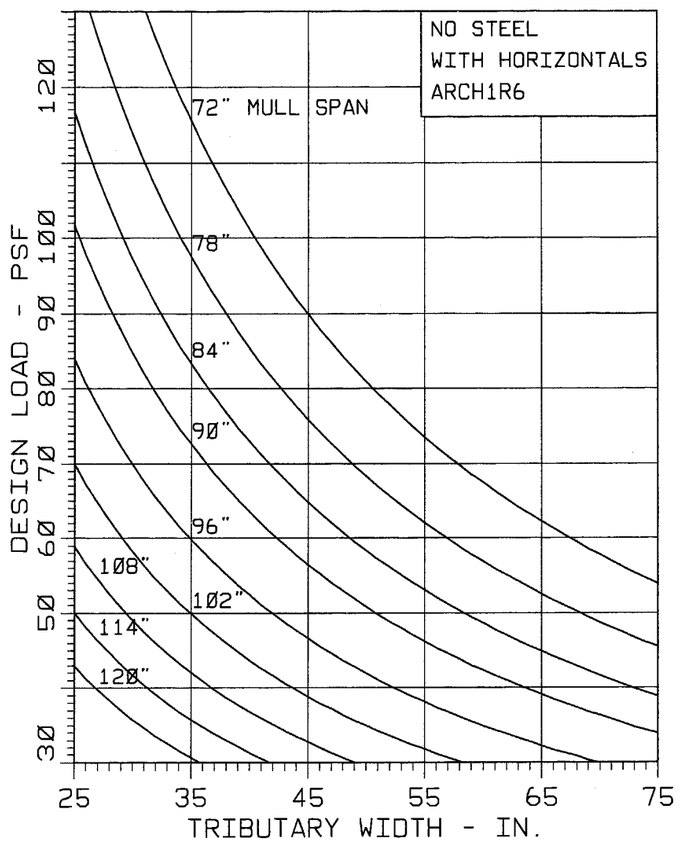


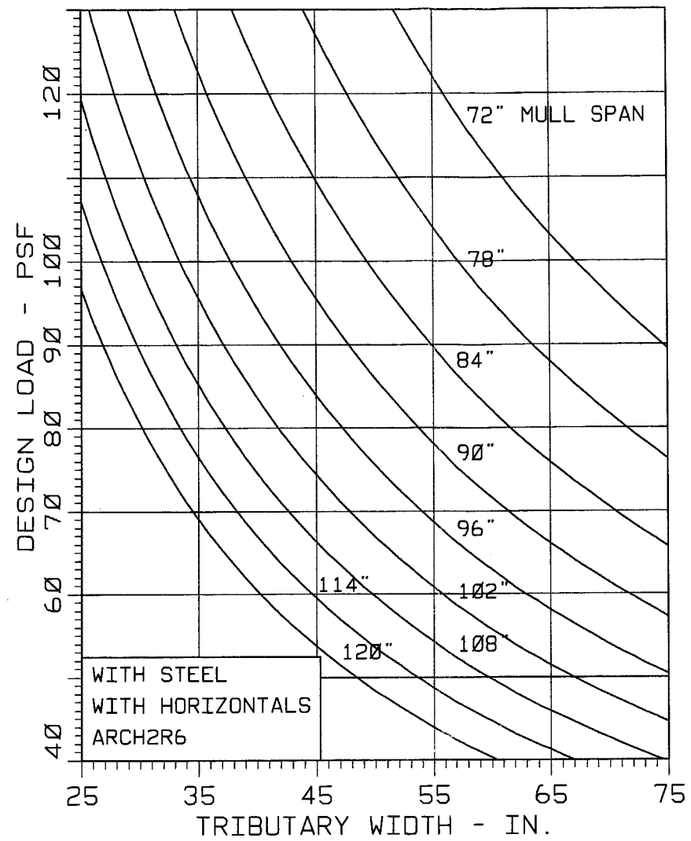


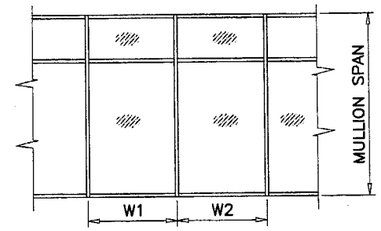


TRIBUTARY WIDTH = $\frac{W1 + W2}{2}$

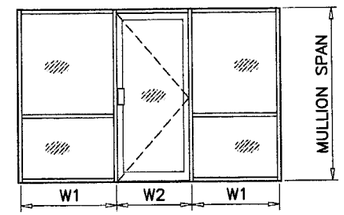


TRIBUTARY WIDTH = $\frac{W1 + W2}{2}$

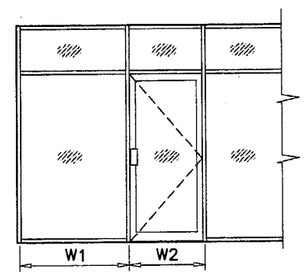


TRIBUTARY WIDTH = $\frac{W1 + W2}{2}$

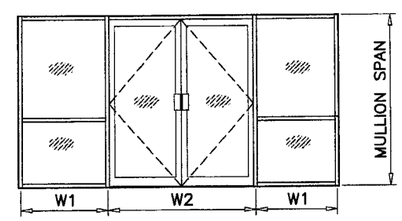


TRIBUTARY WIDTH = $\frac{W1}{2} + \frac{W2}{4}$

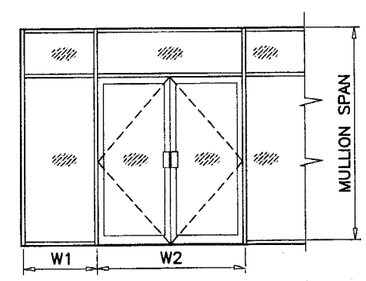


TRIBUTARY WIDTH = $\frac{W1 + W2}{2}$

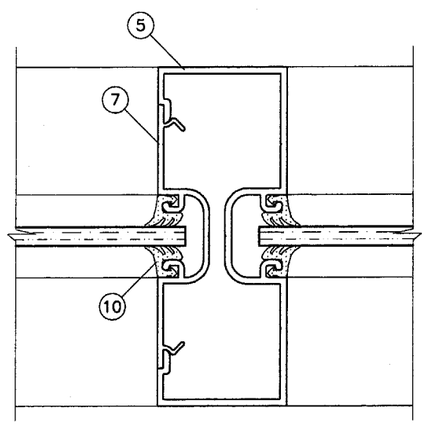


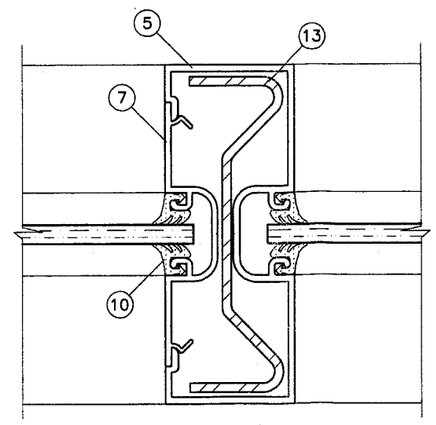


PRODUCT RENEWED
as complying with the Florida
Building Code
Acceptance No. 05-0902.01
Expiration Date 03/19/11
By
Miami Dade Product Control
Division

Engr: DR. HUMAYOUN FAROOQ
STRUCTURES
FLA. PE # 16557
C.A.N. 3538
DEC 05 2005


AL-FAROOQ CORPORATION
ENGINEERS, PLANNERS & PRODUCT DESIGN
1235 SW 87 AVE
MIAMI, FLORIDA 33174
TEL. (305) 264-8100 FAX. (305) 262-6978


STORE\00-13AAC

SERIES 4500 ALUM FLUSH GLAZE STOREFRONT SYS.


ARCH ALUMINUM & GLASS CO.
10200 NORTHWEST 67TH STREET
TAMARAC, FL 33321
TEL. (800) 432-8132 FAX. (954) 724-9293


revisions:

| no | date | by | description |
|---|---|---|---|
| A | 08.24.05 | | GRAPHS REV. |
| B | 11.08.05 | | PART NO. ADDED |
| C | 12.02.05 | | NO CHANGE THIS SHEET |

date: 07-06-00
scale: 1/2" = 1"
dr. by: HAMID
chk. by:

drawing no. 00-13

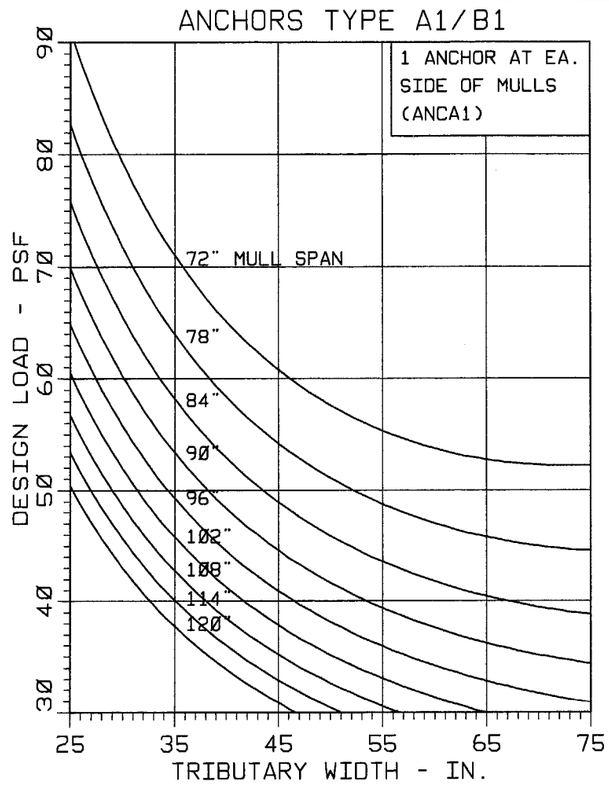


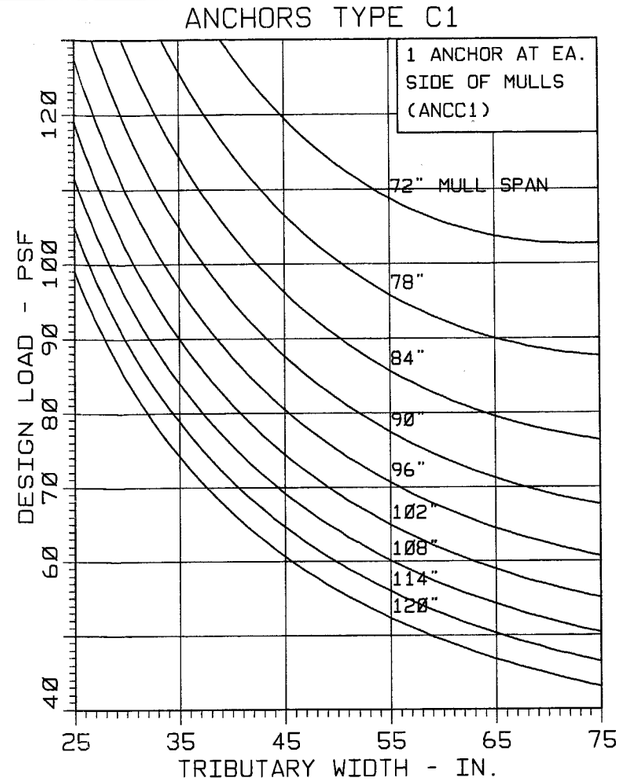


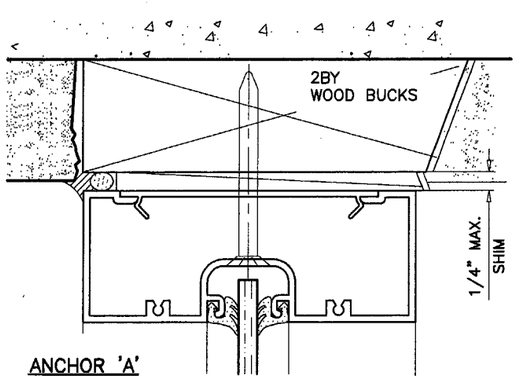


ANCHOR 'A'
INTO 2BY WOOD BUCKS OR WOOD STRUCTURE
1/4" TAPCONS (ELCO OR EQUIV.)
WITH 1-3/8" MIN. PENETRATION INTO WOOD

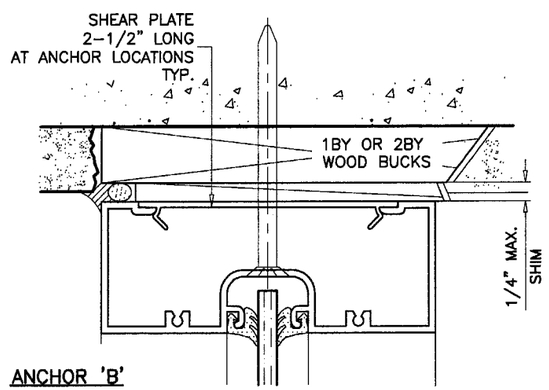


ANCHOR 'B'
THRU WOOD BUCKS INTO MASONRY
1/4" TAPCONS (ELCO OR EQUIV.)
WITH 1-1/4" MIN. EMBED INTO MASONRY

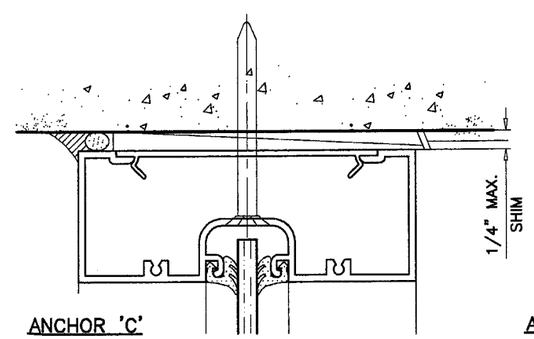


ANCHOR 'C'
DIRECTLY INTO MASONRY
1/4" TAPCONS (ELCO OR EQUIV.)
WITH 1-1/4" MIN. EMBED INTO MASONRY

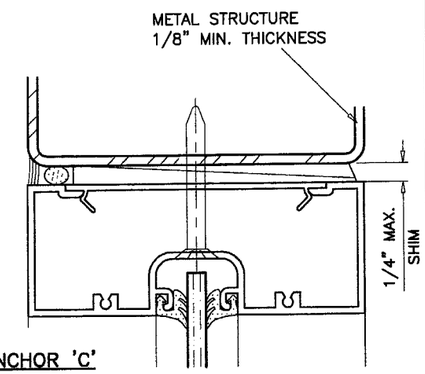


ANCHOR 'C'
INTO METAL STRUCTURES
# 14 SMS OR 1/4" SELF DRILLING SCREWS
STEEL : Fy = 36 KSI MIN.
ALUMINUM : 6063-T5 MIN.

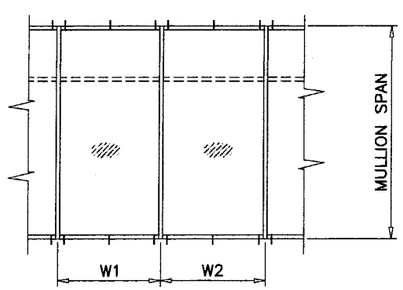


ABOVE GRAPHS ARE FOR ONE ANCHOR AT EACH SIDE OF MULLIONS AND A TYPICAL SPACING OF 15" O.C.

$$\text{TRIBUTARY WIDTH} = \frac{W1 + W2}{2}$$

(SEE DIAGRAMS ON SHEETS 4 & 5 FOR MORE OPTIONS)

**PRODUCT RENEWED**
**as complying with the Florida Building Code**
**Acceptance No.** 05-0902.01
**Expiration Date** 03/19/11
**By** [signature]
**Miami Dade Product Control Division**

Engr: DR. HUMAYOUN FAROOQ
STRUCTURES
FLA. PE # 16557
C.A.N. 3538

DEC 05 2005


AL-FAROOQ CORPORATION
ENGINEERS, PLANNERS & PRODUCT DESIGN
1235 SW 87 AVE
MIAMI, FLORIDA 33174
TEL. (305) 264-8100 FAX. (305) 262-6978
STORE\00-13AAC


SERIES 4500 ALUM. FLUSH GLAZE STOREFRONT SYS.


ARCH ALUMINUM & GLASS CO.
10200 NORTHWEST 67TH STREET
TAMARAC, FL 33321
TEL. (800) 432-8132 FAX. (954) 724-9293


revisions:

| no | date | by | description |
|---|---|---|---|
| A | 08.24.05 | | GRAPHS REV. |
| B | 11.08.05 | | NO CHANGE THIS SHEET |
| C | 12.02.05 | | REV. PER BCCO COMMENTS |

date: 07-06-00
scale: 1/2" = 1"
dr. by: HAMID
chk. by:

drawing no.
00-13

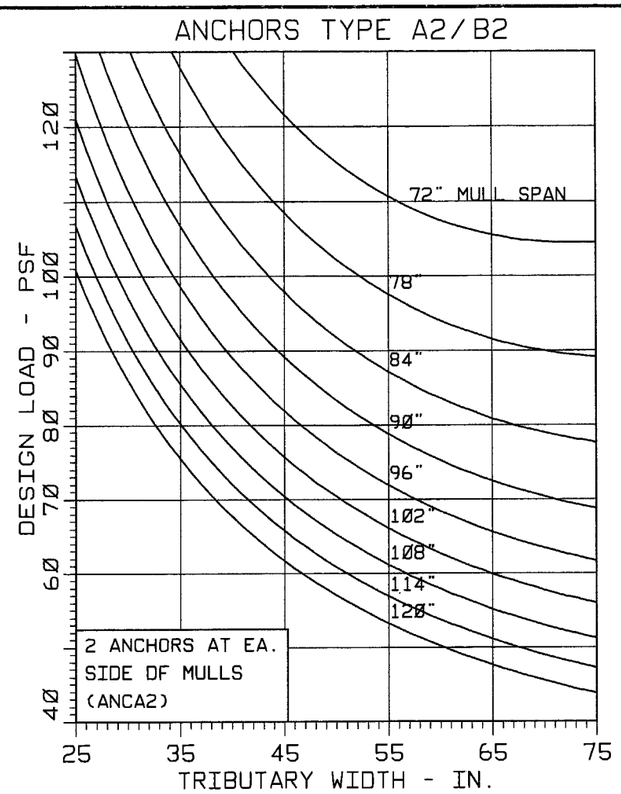


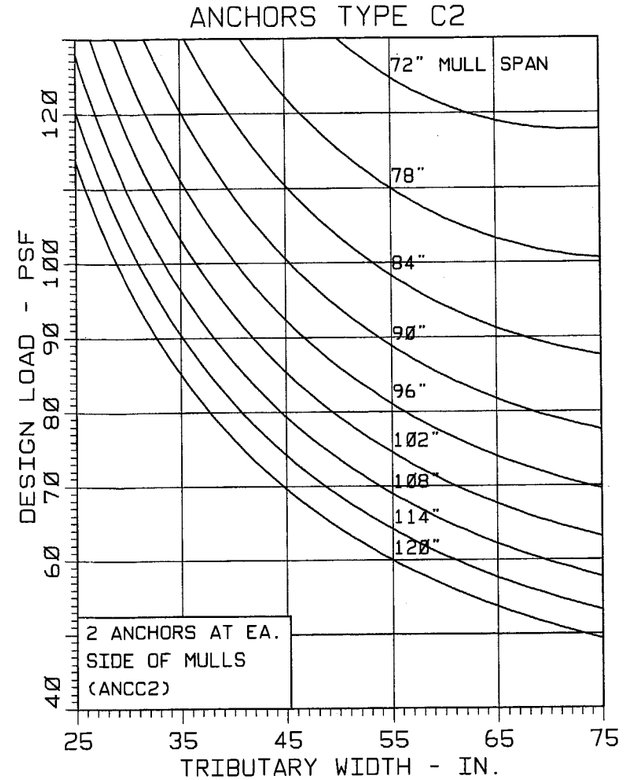


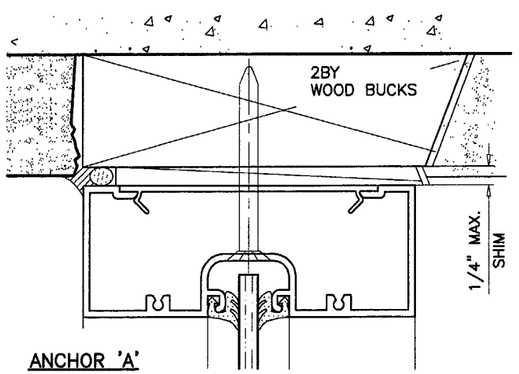


**ANCHOR 'A'**
INTO 2BY WOOD BUCKS OR WOOD STRUCTURE
1/4" TAPCONS (ELCO OR EQUIV.)
WITH 1-3/8" MIN. PENETRATION INTO WOOD

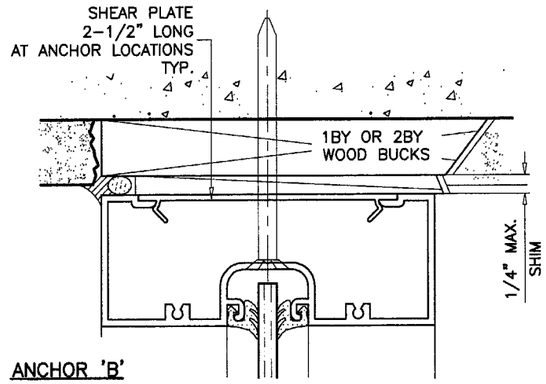


**ANCHOR 'B'**
THRU WOOD BUCKS INTO MASONRY
1/4" TAPCONS (ELCO OR EQUIV.)
WITH 1-1/4" MIN. EMBED INTO MASONRY

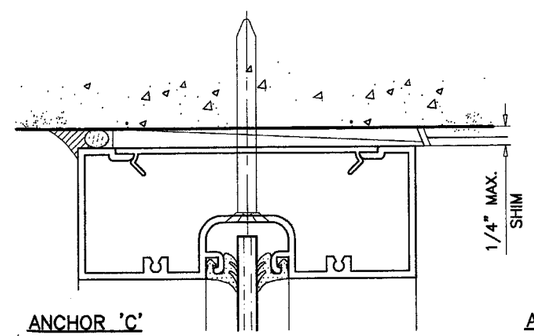


**ANCHOR 'C'**
DIRECTLY INTO MASONRY
1/4" TAPCONS (ELCO OR EQUIV.)
WITH 1-1/4" MIN. EMBED INTO MASONRY

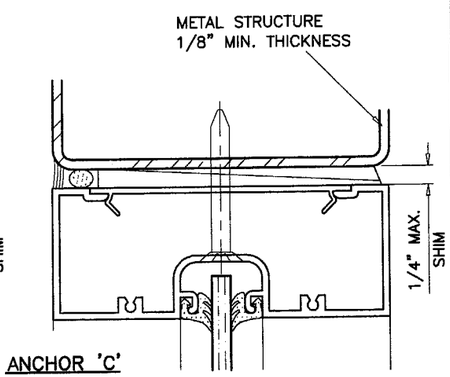


**ANCHOR 'C'**
INTO METAL STRUCTURES
# 14 SMS OR 1/4" SELF DRILLING SCREWS
STEEL : Fy = 36 KSI MIN.
ALUMINUM : 6063-T5 MIN.

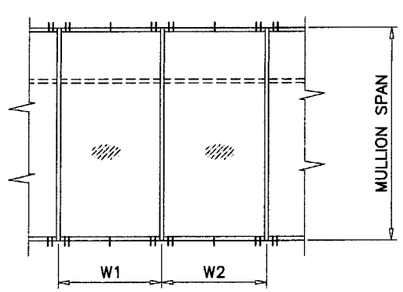


ABOVE GRAPHS ARE FOR TWO ANCHORS AT EACH SIDE OF MULLIONS AND A TYPICAL SPACING OF 15" O.C.

$$\text{TRIBUTARY WIDTH} = \frac{W1 + W2}{2}$$ (SEE DIAGRAMS ON SHEETS 4 & 5 FOR MORE OPTIONS)

PRODUCT RENEWED
as complying with the Florida Building Code
Acceptance No. 05-0902.01
Expiration Date 03/19/11
By
Miami Dade Product Control Division

Engr: DR. HUMAYOUN FAROOQ
STRUCTURES
FLA. PE # 13557
C.A.N. 3538

DEC 05 2005


AL-FAROOQ CORPORATION
ENGINEERS, PLANNERS & PRODUCT DESIGN
1235 SW 87 AVE
MIAMI, FLORIDA 33174
TEL. (305) 264-8100 FAX. (305) 262-6978
STORE\00-13AAC


SERIES 4500 ALUM FLUSH GLAZE STOREFRONT SYS.


ARCH ALUMINUM & GLASS CO.
10200 NORTHWEST 67TH STREET
TAMARAC, FL 33321
TEL. (800) 432-8132 FAX. (954) 724-9293


revisions:

| no | date | by | description |
|---|---|---|---|
| A | 08.24.05 | | GRAPHS REV. |
| B | 11.08.05 | | NO CHANGE THIS SHEET |
| C | 12.02.05 | | REV. PER BCCO COMMENTS |

date: 07-06-00
scale: 1/2" = 1"
dr. by: HAMID
chk. by:

drawing no. 00-13

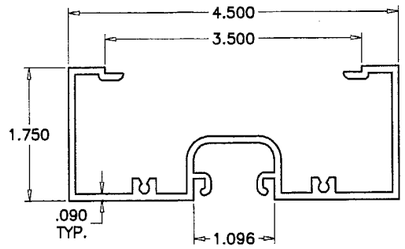


FRAME HEAD/MULLION

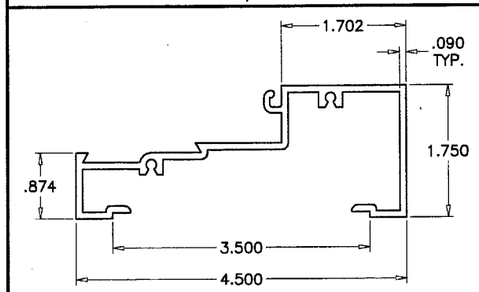


FRAME HORIZONTAL/SILL

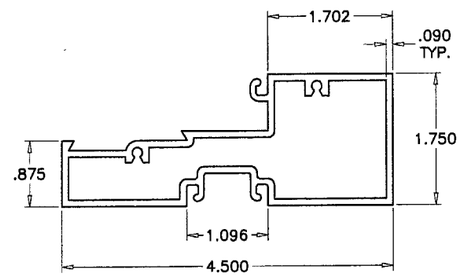


FRAME HORIZONTAL

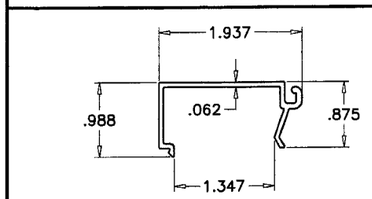


GLAZING STOP

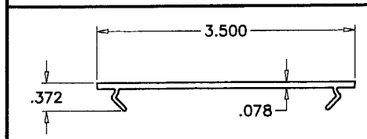


SNAP IN COVER

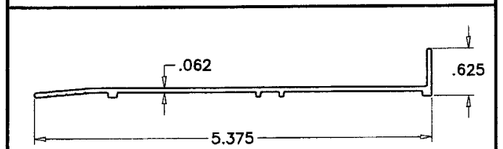


SILL FLASHING (OPTIONAL)

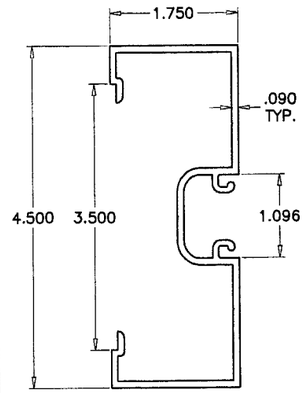


FRAME JAMB

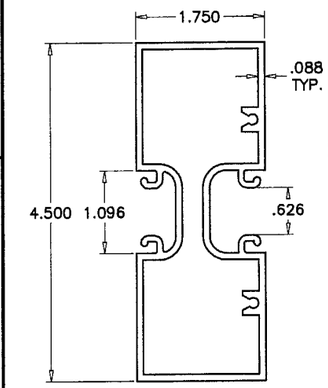


MULLION

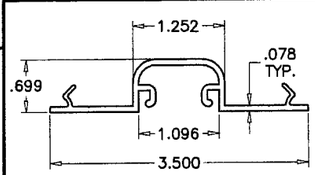


POCKET FILLER

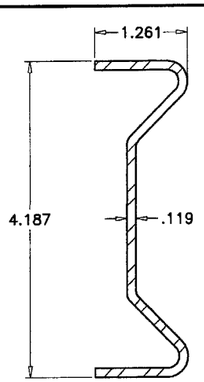


STEEL REINFORCING
36 KSI MIN.

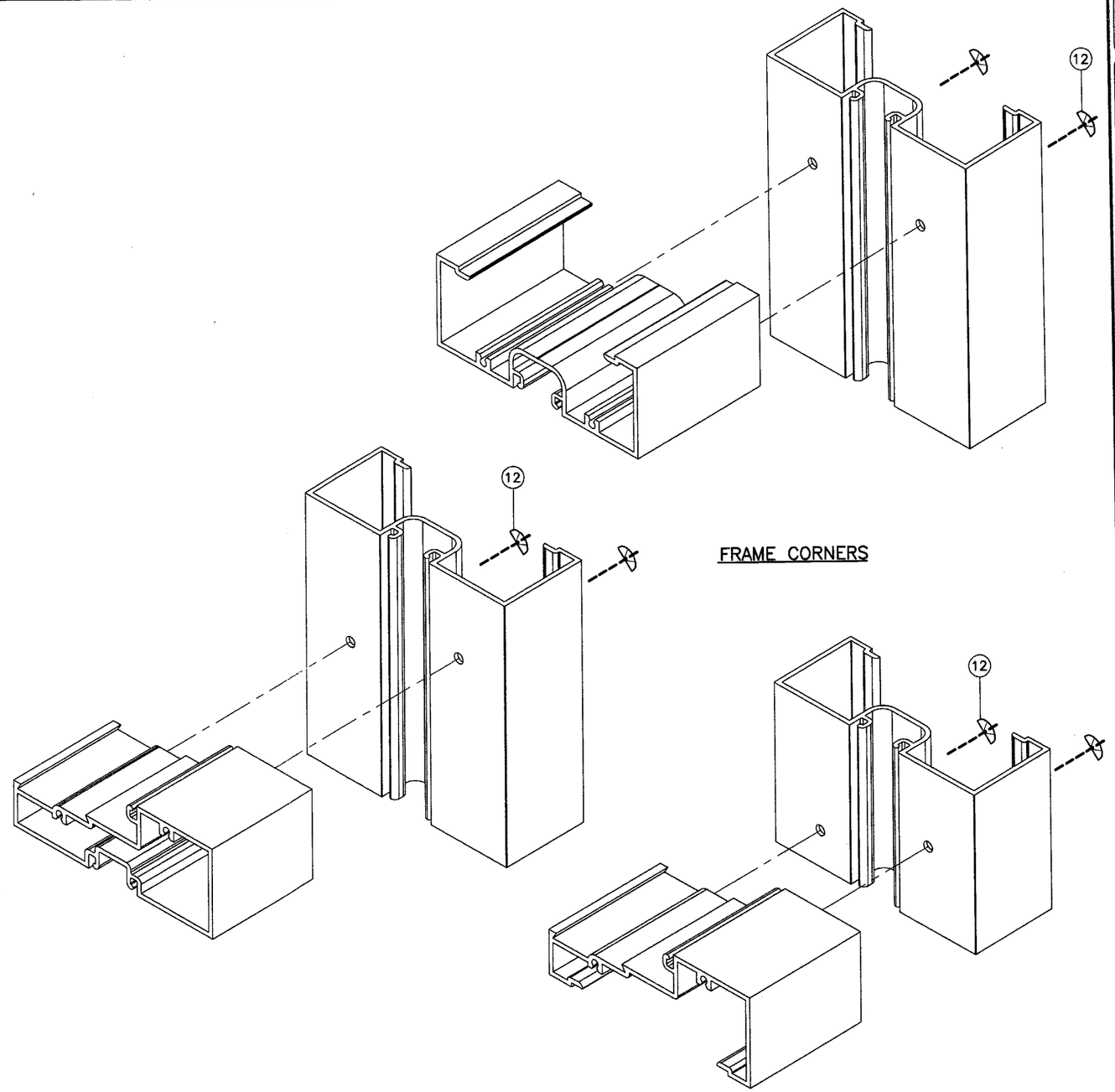


FRAME CORNERS

PRODUCT RENEWED
as complying with the Florida
Building Code
Acceptance No. 05-0902.01
Expiration Date 03/19/11
By
Miami Dade Product Control
Division

Engr: DR. HUMAYOUN FAROOQ
STRUCTURES
FLA. PE # 18557
C.A.N. 3538

DEC 05 2005

AL-FAROOQ CORPORATION
ENGINEERS, PLANNERS & PRODUCT DESIGN
1235 SW 87 AVE
MIAMI, FLORIDA 33174
TEL. (305) 264-8100 FAX. (305) 262-6978

STORE\00-13AAC

SERIES 4500 ALUM FLUSH GLAZE STOREFRONT SYS.

ARCH ALUMINUM & GLASS CO.
10200 NORTHWEST 67TH STREET
TAMARAC, FL 33321
TEL. (800) 432-8132 FAX. (954) 724-9293

revisions:

| no | date | by | description |
|---|---|---|---|
| A | 08.24.05 | | REINFORCING REV. |
| B | 11.08.05 | | NO CHANGE THIS SHEET |
| C | 12.02.05 | | NO CHANGE THIS SHEET |

date: 07-06-00
scale: 1/2" = 1"
dr. by: HAMID
chk. by:

drawing no.
00-13

sheet 8 of 8