MIAMI-DADE COUNTY
BUILDING CODE COMPLIANCE OFFICE (BCCO)
PRODUCT CONTROL DIVISION

MIAMI-DADE COUNTY, FLORIDA
METRO-DADE FLAGLER BUILDING

140 WEST FLAGLER STREET, SUITE 1603
MIAMI, FLORIDA 33130-1563
(305) 375-2901 FAX (305) 375-2908
www.miamidade.gov

NOTICE OF ACCEPTANCE (NOA)

Nyloboard, LLC
14187 Industrial Park Blvd.
Covington, GA 30014

SCOPE:
This NOA is being issued under the applicable rules and regulations governing the use of construction materials. The documentation submitted has been reviewed by Miami-Dade County Product Control Division and accepted by the Board of Rules and Appeals (BORA) to be used in Miami Dade County and other areas where allowed by the Authority Having Jurisdiction (AHJ).

This NOA shall not be valid after the expiration date stated below. The Miami-Dade County Product Control Division (In Miami Dade County) and/or the AHJ (in areas other than Miami Dade County) reserve the right to have this product or material tested for quality assurance purposes. If this product or material fails to perform in the accepted manner, the manufacturer will incur the expense of such testing and the AHJ may immediately revoke, modify, or suspend the use of such product or material within their jurisdiction. BORA reserves the right to revoke this acceptance, if it is determined by Miami-Dade County Product Control Division that this product or material fails to meet the requirements of the applicable building code.

This product is approved as described herein, and has been designed to comply with the High Velocity Hurricane Zone of the Florida Building Code.

DESCRIPTION: **"Nyloboard SIP" Structural Wall Panel System**

APPROVAL DOCUMENT: Drawing No. NYL0001, titled " 4 ¾" Structural Insulated Panel ", sheets 1 through 5 of 5, prepared by PTC Engineering, Inc., dated May 03, 2006, last revision #C dated November 21, 2006, signed and sealed by L. Roberto Lomas, P.E., bearing the Miami-Dade County Product Control Approval stamp with the Notice of Acceptance number and approval date by the Miami-Dade County Product Control Division.

MISSILE IMPACT RATING: **Large and Small Missile Impact**

LABELING: Each panel shall bear a permanent label with the manufacturer's name or logo, city, state and the following statement: "Miami-Dade County Product Control Approved", unless otherwise noted herein.

RENEWAL of this NOA shall be considered after a renewal application has been filed and there has been no change in the applicable building code negatively affecting the performance of this product.

TERMINATION of this NOA will occur after the expiration date or if there has been a revision or change in the materials, use, and/or manufacture of the product or process. Misuse of this NOA as an endorsement of any product, for sales, advertising or any other purposes shall automatically terminate this NOA. Failure to comply with any section of this NOA shall be cause for termination and removal of NOA.

ADVERTISEMENT: The NOA number preceded by the words Miami-Dade County, Florida, and followed by the expiration date may be displayed in advertising literature. If any portion of the NOA is displayed, then it shall be done in its entirety.

INSPECTION: A copy of this entire NOA shall be provided to the user by the manufacturer or its distributors and shall be available for inspection at the job site at the request of the Building Official.

This NOA consists of this page 1, evidence submitted page E-1 as well as approval document mentioned above. The submitted documentation was reviewed by **Helmy A. Makar, P.E., M.S.**

PRODUCT CONTROL ACCEPTED

Helmy A. Makar
12/21/2006

NOA No 05-0902.02
Expiration Date: 12/21/2011
Approval Date: 12/21/2006

Nyloboard, LLC

NOTICE OF ACCEPTANCE: EVIDENCE SUBMITTED

A. DRAWINGS

1. *Drawing No. NYL0001, titled " 4 ¾" Structural Insulated Panel ", sheets 1 through 5 of 5, prepared by PTC Engineering, Inc., dated May 03, 2006, last revision #C dated November 21, 2006, signed and sealed by L. Roberto Lomas, P.E.*

B. TESTS

1. *Test report on Large Missile Impact Test, Uniform Static Air Pressure Test, and Cyclic Wind Pressure Test on Nyloboard SIP Wall Panel, prepared by Certified Testing Laboratories, Report No. CTLA 1457W-4, dated 03/30/2006, signed and sealed by Ramesh Patel, P.E.*
2. *Test report on Racking Test on Nyloboard SIP Wall Panel, prepared by Certified Testing Laboratories, Report No. CTLA 1457W-6, dated 03/30/2006, signed and sealed by Ramesh Patel, P.E.*

C. CALCULATIONS

1. *Calculations titled "Anchor Calculations for Wall Panel 4' x 9' Composite Sheathing Series Structural Insulated Panel, 7 pages, prepared by PTC Engineering, Inc., dated May 04, 2006, signed and sealed by L. Roberto Lomas, P.E.*

D. QUALITY ASSURANCE

1. *By Miami-Dade County Building Code Compliance Office.*

E. MATERIAL CERTIFICATIONS

1. *Technical Product Data issued by O-Basf, dated June 10, 2005, with chemical composition and mechanical properties of Rigid Urethane Foam System.*
2. *Foamed Plastic Flame Spread and Smoke Developed test.*

Helmy A. Makar, P. E., M.S.
Product Control Examiner
NOA No 05-0902.02
Expiration Date: 12/21/2011
Approval Date: 12/21/2006

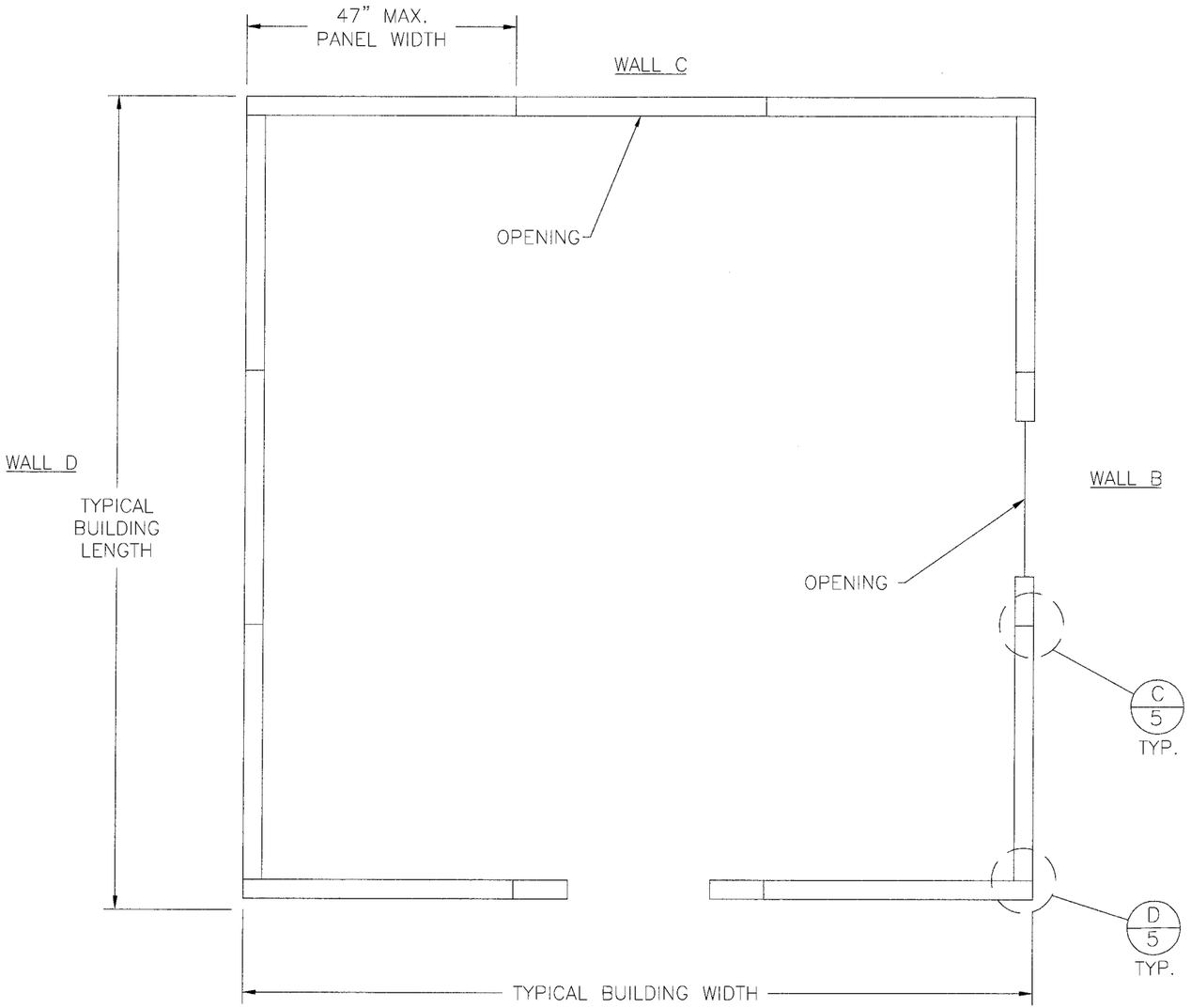

PLAN VIEW
(FOR SHOW PURPOSE ONLY)
TYPICAL SIP STRUCTURE

GENERAL NOTES:

1. THIS PRODUCT DESCRIBED HEREIN REPRESENT A S.I.P. WALL PANEL COMPONENT DESIGNED AND TESTED IN ACCORDANCE WITH THE PROVISIONS FOR THE HIGH VELOCITY HURRICANE ZONE (HVHZ) OF THE 2004 EDITION OF THE FLORIDA BUILDING CODE, THIS PRODUCT MEETS LARGE MISSILE IMPACT REQUIREMENTS.
2. THE DESIGN CRITERIA PROVIDED DO NOT INCLUDE THE USE OF A 33% ALLOWABLE STRESS INCREASE WHEN DESIGNING WITH THIS S.I.P. WALL COMPONENT.
3. PRODUCTS ARE APPROVED FOR USE WHERE LARGE MISSILE IMPACT RESISTANCE IS REQUIRED.
4. ROOF PANEL OR SYSTEM UNDER SEPARATE APPROVAL.
5. SIP = STRUCTURAL INSULATED PANEL

STRUCTURAL INSULATED PANEL (SIP) WALL PANEL STRUCTURAL SPECIFICATIONS:

6. METAL STUDS SHALL BE COLD FORMED STEEL COMPLYING WITH ASTM-A653 STRUCTURAL QUALITY, GRADE 33 GALVANIZED WITH A MINIMUM G60 FINISH AND A MINIMUM THICKNESS OF 0.063 INCHES.

MATERIAL CHARACTERISTICS:
BASF FOAM PLASTICS

DESCRIPTION	TEST	PROPERTIES
FLAME SPREAD INDEX	ASTM E84	20 LESS THAN 25
SMOKE DEVELOPMENT	ASTM E84	400 LESS THAN 450

RACKING TESTS:

DESCRIPTION	TEST	PANEL WIDTH	MAXIMUM
COMPRESSION TEST	ASTM E72	3.91 FT.	767.0 PLF
TENSION/RACKING TEST	ASTM E72	7.83 FT.	305.0 PLF

DESIGN PRESSURE RATING
±70.0 PSF LARGE MISSILE IMPACT

Approved as complying with the Florida Building Code
Date 12/21/2006
NOA# 05-0902.02
Miami Dade Product Control Division
By Helena A. Molina

SYM	REVISION	DATE	BY
C	PER NYLOBOARD PER 11/21/06	11/21/06	BB
B	REVISED PER MIAMI-DADE LETTER 11/17/06	11/20/06	BB
A	PER MIAMI DADE MARKUPS PER 9/13/06	9/26/06	BB

L. Roberto Lomas
P.E. No. 62514
Luis R. Lomas
11/28/06
PTC Engineering, Inc.
2361 S.E. Seafury Lane
Port St. Lucie, Florida 34952
FBPE Certificate of Authorization NO. 25935

NYLOBOARD, INC.
14187 INDUSTRIAL BLVD., CONVINGTON, GA. 30014

TITLE: 4 3/4" STRUCTURAL INSULATED PANEL
PLAN VIEW & GENERAL NOTES

PREPARED BY:
PTC
PTC ENGINEERING, INC.
Phone 772.398.4639 Fax 772.398.4654

DRN:	DATE:
DRL	05/03/06
SCALE: N.T.S.	DWG. NO: NYL0001
REV: C	SHEET: 1 OF 5

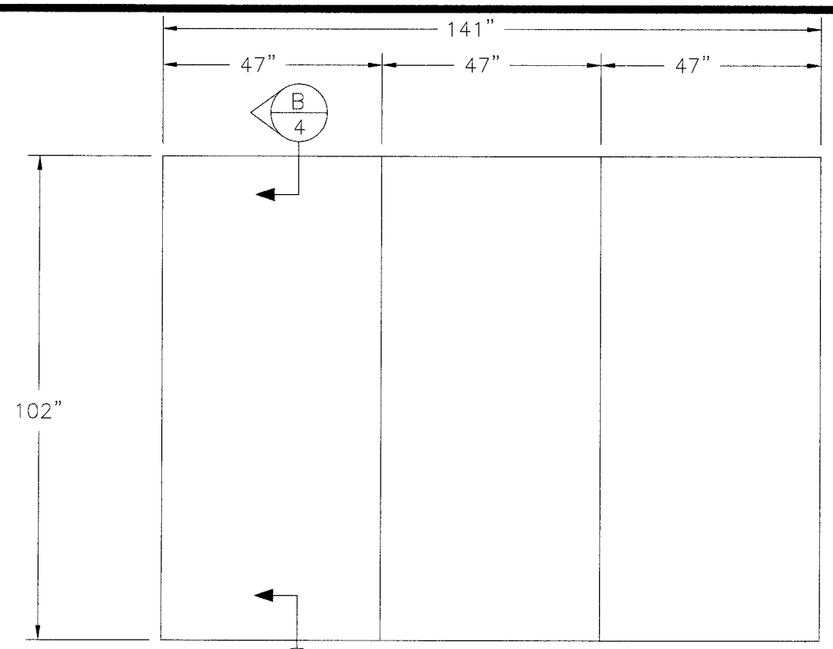

WALL C & D
EXTERIOR ELEVATION

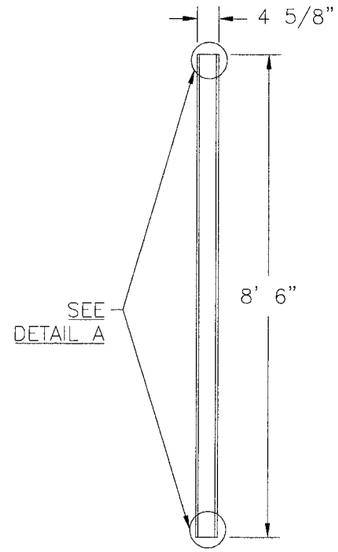

WALL PANEL
TYPICAL SIDE
ELEVATION

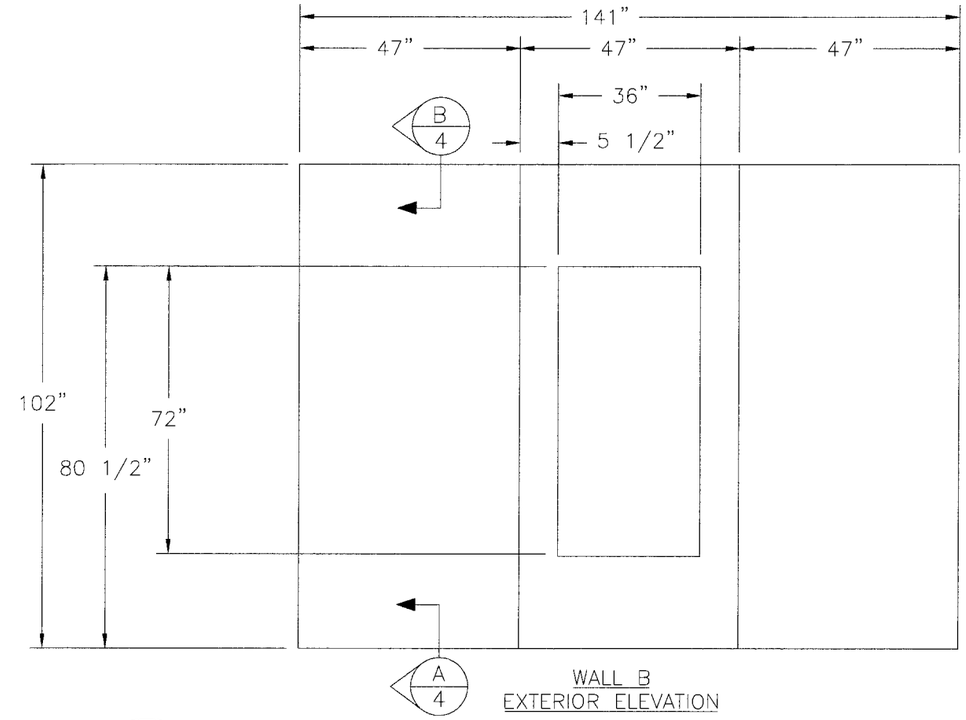

WALL B
EXTERIOR ELEVATION

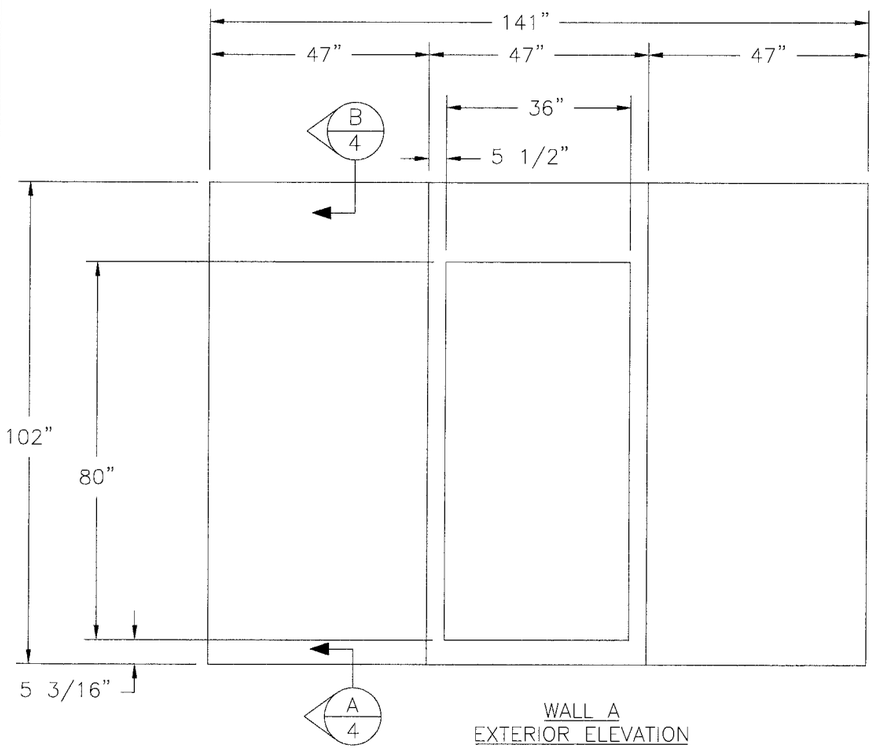

WALL A
EXTERIOR ELEVATION

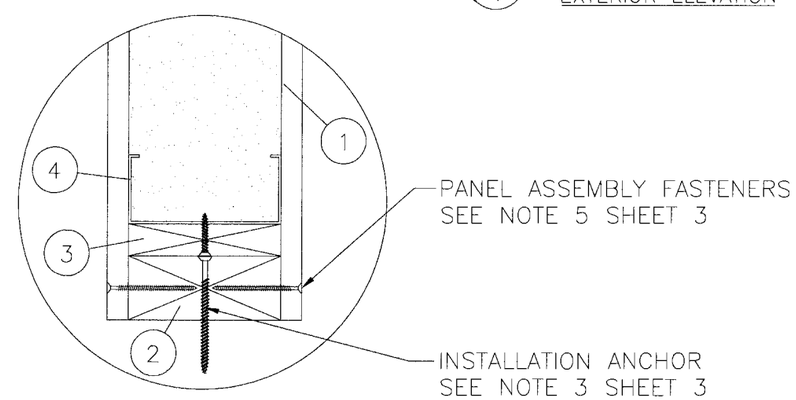

DETAIL A
(TYPICAL ALL 4
SIDES OF PANEL)

Approved as complying with the
Florida Building Code
Date 12/21/2006
NOA# 05-0902.02
Miami Dade Product Control
Division
By

SYM	REVISION	DATE	BY
C	PER MIAMI DADE MARKUPS PER 9/13/06	11/21/06	BB
B	REVISED PER MIAMI-DADE LETTER 11/17/06	11/20/06	BB
A	PER NYLOBOARD PER 11/21/06	9/26/06	BB

L. Roberto Lomas
P.E. No. 62514
11/28/06
PTC Engineering, Inc.
2361 S.E. Seafury Lane
Port St. Lucie, Florida 34952
FBPE Certificate of Authorization NO. 25935

NYLOBOARD, INC.
14187 INDUSTRIAL BLVD., CONVINGTON, GA. 30014

TITLE: 4 3/4" STRUCTURAL INSULATED PANEL
ELEVATIONS AND DESIGN PRESSURE RATINGS

PREPARED BY:
PTC
PTC ENGINEERING, INC.
Phone 772.398.4639 Fax 772.398.4654

DRN:	DATE:
DRL	05/03/06
SCALE: N.T.S.	DWG. NO: NYL0001
REV: C	SHEET: 2 OF 5

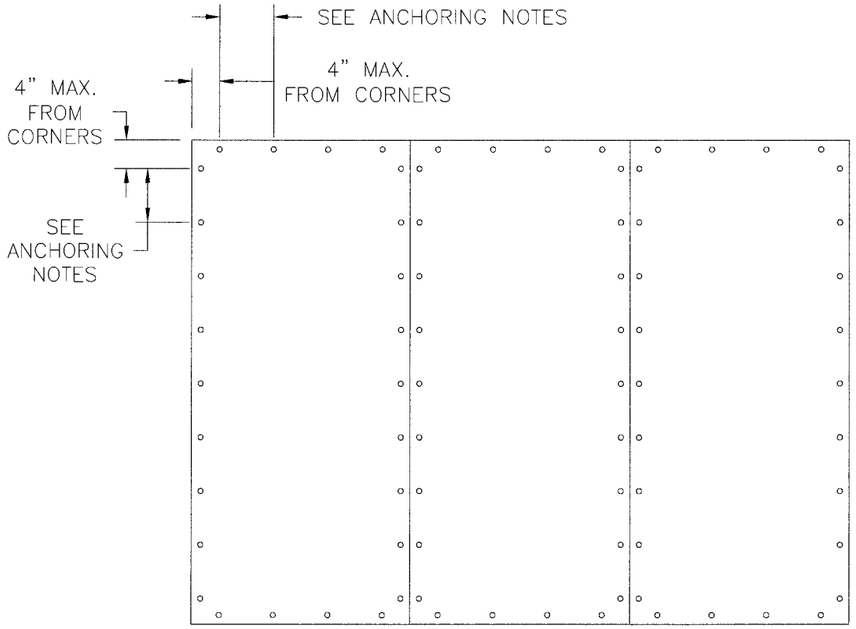

WALL PANEL
EXTERIOR ELEVATION

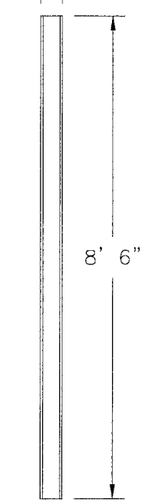

WALL PANEL
TYPICAL SIDE
ELEVATION

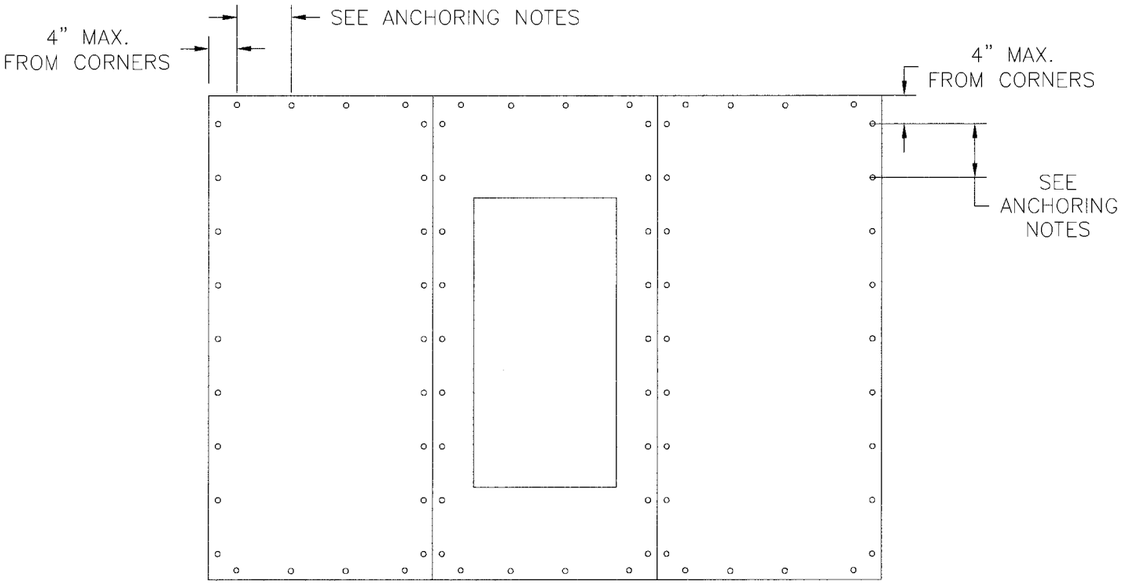

WALL PANEL W/OPENING
EXTERIOR ELEVATION

Approved as complying with the Florida Building Code
Date 12/21/2006
NOA# 05-0902.02
Miami Dade Product Control Division
By

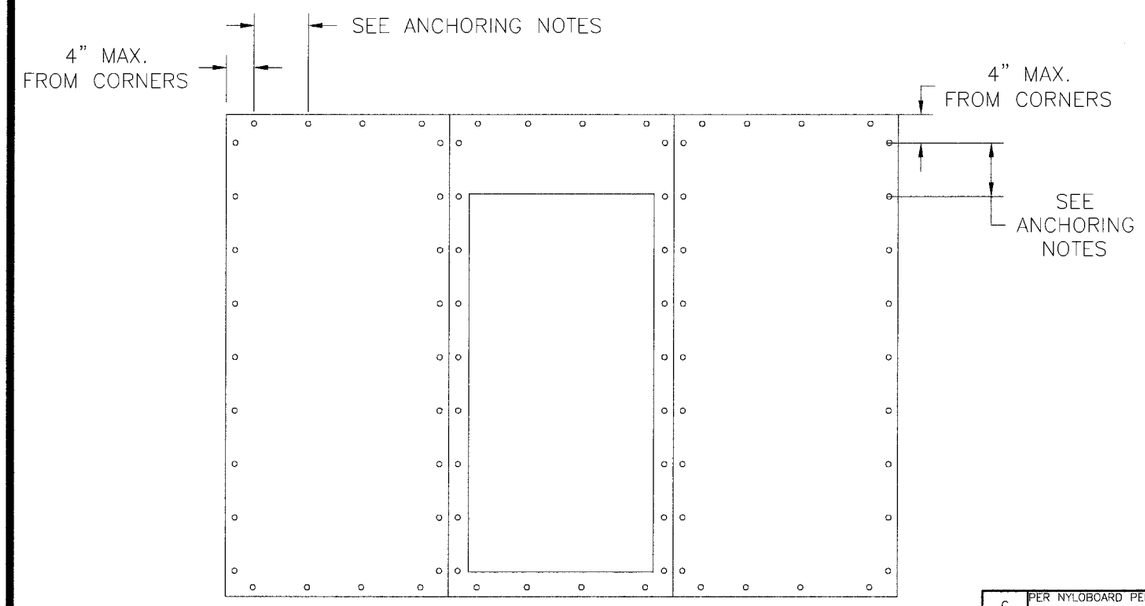

WALL PANEL W/DOOR OPENING
EXTERIOR ELEVATION

ANCHORING NOTES:

1. PANELS INSTALLED WITH #8 SELF TAPPING SCREW INTO METAL STUD, SHALL BE ANCHORED AT HEAD, SILL AND JAMBS 4" MAXIMUM FROM EACH CORNER AND 4" ON CENTER THEREAFTER.
2. INSTALL NYLOBOARD TOP PLATE USING #8 SCREWS 1" FROM EACH END & 6" MAX. O.C. THEREAFTER.
3. ANCHOR SILL PLATE USING 3/16" ELCO TAPCONS WITH SUFFICIENT LENGTH TO ACHIEVE A 1 1/4" MINIMUM EMBEDMENT. LOCATE TAPCONS 1" FROM EACH END & 6" MAX. O.C. THEREAFTER.
4. INSTALL 5/16" SPAX SCREWS 6" FROM EACH END AND 12" MAXIMUM O.C. THEREAFTER.
5. INSTALL PANELS TO SILL & HEAD PLATES WITH #8 WOOD SCREWS WITH SUFFICIENT LENGTH TO ACHIEVE 1 1/2" EMBEDMENT. LOCATE SCREWS 4" FROM EACH END & 4" MAX. O.C. THEREAFTER.

SYM	REVISION	DATE	BY
C	PER NYLOBOARD PER 11/21/06	11/21/06	BB
B	REVISED PER MIAMI-DADE LETTER 11/17/06	11/20/06	BB
A	PER MIAMI DADE MARKUPS PER 9/13/06	9/26/06	BB

L. Roberto Lomas
P.E. No. 62514
11/28/06

PTC Engineering, Inc.
2361 S.E. Seafury Lane
Port St. Lucie, Florida 34952
FBPE Certificate of Authorization NO. 25935

NYLOBOARD, INC.

14187 INDUSTRIAL BLVD., CONVINGTON, GA. 30014

TITLE: 4 3/4" STRUCTURAL INSULATED PANEL ANCHORING DETAILS AND NOTES

PREPARED BY:
PTC ENGINEERING, INC.
Phone 772.398.4639 Fax 772.398.4654

DRN:	DATE:
DRL	05/03/06
SCALE: N.T.S.	DWG. NO: NYL0001
REV: C	SHEET: 3 OF 5

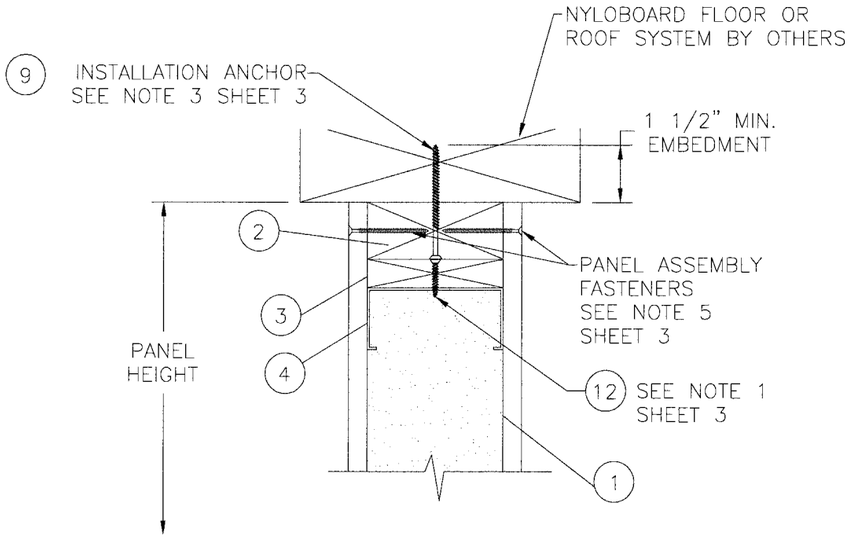

SECTION B
ALTERNATE

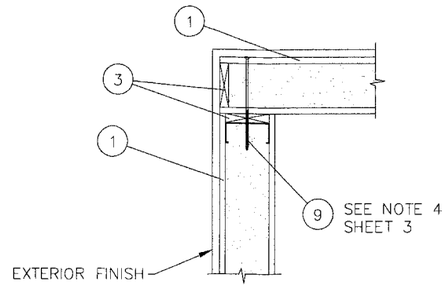

SECTION D
DETAIL OF MINI-SIP CORNER

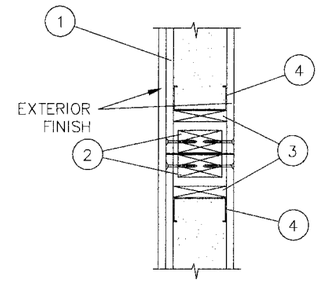

SECTION C
DETAIL OF MINI-SIP CONNECTION

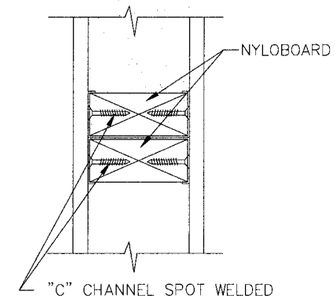

SPLINE DETAIL

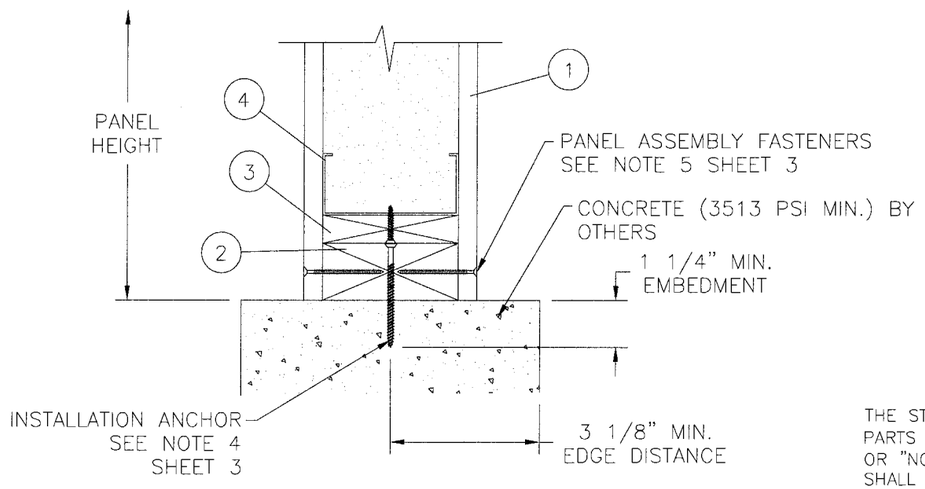

SECTION A
ALTERNATE

THE STRUCTURAL ADEQUACY OF ALL PARTS MARKED WITH "BY OTHERS" OR "NOT PART OF THIS APPROVAL" SHALL BE CHECKED & APPROVED BY THE STRUCTURAL PLANS EXAMINER OF THE CORRESPONDING BUILDING DEPARTMENT FOR EACH JOB.

SYM	REVISION	DATE	BY
C	PER NYLOBOARD PER 11/21/06	11/21/06	BB
B	REVISED PER MIAMI-DADE 11/17/06	11/20/06	BB
A	PER MIAMI DADE MARKUPS PER 9/13/06	9/26/06	BB

Approved as complying with the Florida Building Code
Date 12/21/2006
NOA# 05-0902.02
Miami Dade Product Control
Division
By Helmy A. Mel

L. Roberto Lomas
P.E. No. 62514
11/28/06
PTC Engineering, Inc.
2361 S.E. Seafury Lane
Port St. Lucie, Florida 34952
FBPE Certificate of Authorization NO. 25935

NYLOBOARD, INC.
144187 INDUSTRIAL BLVD., COVINGTON, GA. 30014

TITLE: 4 3/4" STRUCTURAL INSULATED PANEL CROSS SECTION DETAILS

PREPARED BY:
PTC ENGINEERING, INC.
Phone 772.398.4639 Fax 772.398.4654

DRN: DRL	DATE: 05/03/06
SCALE: N.T.S.	DWG. NO: NYL0001
REV: C	SHEET: 4 OF 5

BILL OF MATERIAL		
ITEM #	DESCRIPTION	VENDOR
1	4-5/8" THICK NYLOBOARD PANEL	NYLOBOARD
2	1-1/2" X 3 5/8" NYLOBOARD SILL & HEAD PLATE & JAMBS	NYLOBOARD
3	3/4" X 3 5/8" NYLOBOARD END CAP	NYLOBOARD
4	16 GAUGE STEEL STUD	CLARK STEEL
5	NOT USED	
6	NOT USED	
7	NOT USED	
8	NOT USED	
9	5/16" SPAX SCREW	PURCHASED
10	NOT USED	
11	NOT USED	
12	#10-24 X 1 7/16" TEK SCREW	PURCHASED
13	PL POLYURETHANE CONSTRUCTION ADHESIVE	PURCHASED

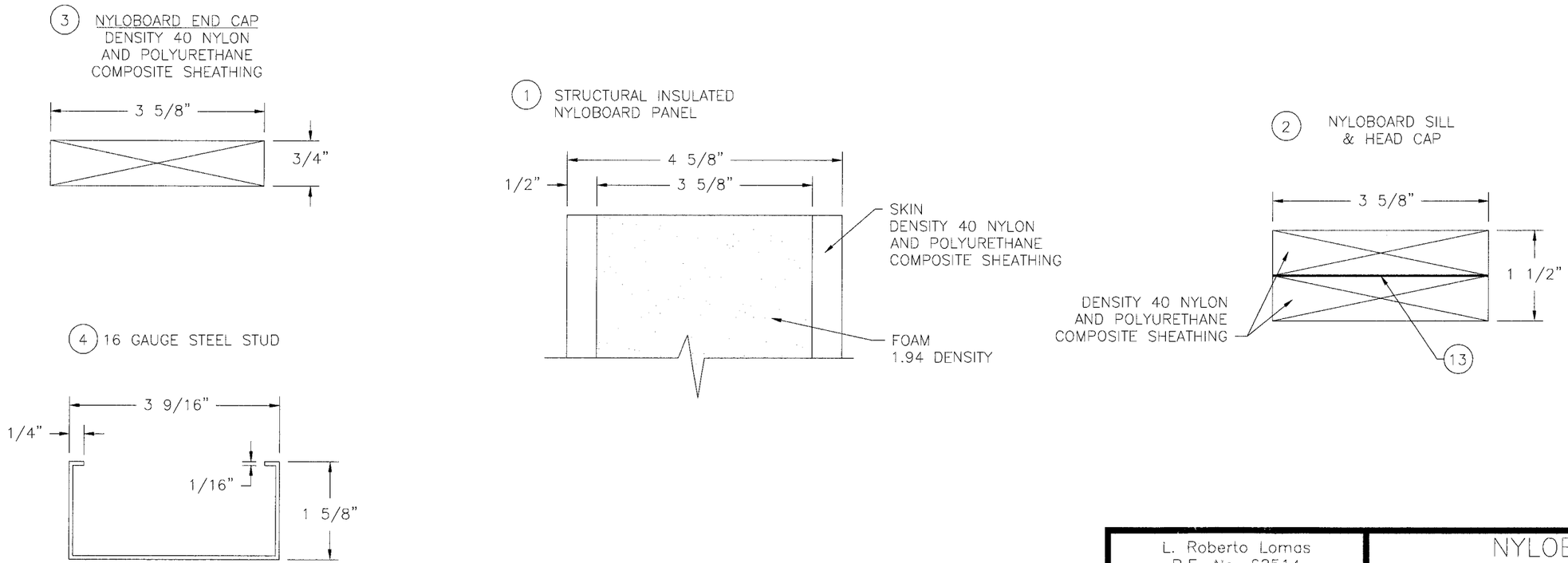

Approved as complying with the Florida Building Code
Date 12/21/2006
NOA# 05-0902.02
Miami Dade Product Control Division
By Helmy A. Mohr

SYM	REVISION	DATE	BY
C	PER NYLOBOARD PER 11/21/06	11/21/06	BB
B	REVISED PER MIAMI-DADE LETTER 11/17/06	11/20/06	BB
A	PER MIAMI DADE MARKUPS PER 9/13/06	9/26/06	BB

L. Roberto Lomas
P.E. No. 62514
11/28/06
PTC Engineering, Inc.
2361 S.E. Seafury Lane
Port St. Lucie, Florida 34952
FBPE Certificate of Authorization NO. 25935

NYLOBOARD, INC.
144187 INDUSTRIAL BLVD., COVINGTON, GA. 30014

TITLE: 4 3/4" STRUCTURAL INSULATED PANEL
BILL OF MATERIALS

PREPARED BY:
PTC ENGINEERING, INC.
Phone 772.398.4639 Fax 772.398.4654

DRN: DRL	DATE: 05/03/06
SCALE: N.T.S.	DWG. NO: NYL0001
REV: C	SHEET: 5 OF 5